FCC 47 CFR PART 15 SUBPART C

CERTIFICATION TEST REPORT

For

R/C CAR

MODEL No.: 9111、9111A、9111B、9111C、9111D、9111H、9111M、9112、9112A、9112B、9112C、9112D、9112E、9112G、9112M、9113、9113A、9113B、9113C、9113D、9114、9114A、9114B、9114C、9114D、9115、9115M、9115K、9116、9116M、9117、9117B、9117C、9118、9118G、9119、9119G、9105、9120、9120G、9121、9121G、9122、9122A、9122K、9122G、9123、9123A、9123G、9124、9124A、9125、9126、9127、9128、9129、9130、9131、9132、9133、8411、8412、8413、8414、8415、8416、8417、8418、8419、7711、7712、7713、7714、7715、7716、7717、7718、7719

FCC ID:T9D-NST9111

Trade Mark: N/A

REPORT NO: ES170905011W

ISSUE DATE: October 17, 2017

Prepared for

NEW SUNNY TOYS INDUSTRIAL CO., LTD

FENGXIN 2ND RD.,CHENGHAI,SHANTOU,GUANGDONG,CHINA

Prepared by

EMTEK(SHENZHEN) CO., LTD.

Bldg 69, Majialong Industry Zone, Nanshan District, Shenzhen, Guangdong, China
TEL: 86-755-26954280
FAX: 86-755-26954282

Table of Contents

1 TEST RESULT CERTIFICATION 3

2 EUT TECHNICAL DESCRIPTION 4

3 SUMMARY OF TEST RESULT 5

4 TEST METHODOLOGY 6

4.1 GENERAL DESCRIPTION OF APPLIED STANDARDS 6
4.2 MEASUREMENT EQUIPMENT USED 6
4.3 DESCRIPTION OF TEST MODES 7

5 FACILITIES AND ACCREDITATIONS 8

5.1 FACILITIES 8
5.2 LABORATORY ACCREDITATIONS AND LISTINGS 8

6 TEST SYSTEM UNCERTAINTY 9

7 SETUP OF EQUIPMENT UNDER TEST 10

7.1 RADIO FREQUENCY TEST SETUP 1 10
7.2 RADIO FREQUENCY TEST SETUP 2 10
7.3 CONDUCTED EMISSION TEST SETUP 12
7.4 SUPPORT EQUIPMENT 12

8 TEST REQUIREMENTS 13

8.1 BANDWIDTH TEST 13
8.2 RADIATED SPURIOUS EMISSION 17
8.3 CONDUCTED EMISSIONS TEST 30
8.4 ANTENNA APPLICATION 31

1 TEST RESULT CERTIFICATION

Applicant:	NEW SUNNY TOYS INDUSTRIAL CO., LTD FENGXIN 2ND RD.,CHENGHAI,SHANTOU,GUANGDONG,CHINA
Manufacturer:	NEW SUNNY TOYS INDUSTRIAL CO., LTD FENGXIN 2ND RD.,CHENGHAI,SHANTOU,GUANGDONG,CHINA
EUT Description:	R/C CAR
Model Number:	9111、9111A、9111B、9111C、9111D、9111H、9111M、9112、9112A、9112B、9112C、9112D、9112E、9112G、9112M、9113、9113A、9113B、9113C、9113D、9114、9114A、9114B、9114C、9114D、9115、9115M、9115K、9116、9116M、9117、9117B、9117C、9118、9118G、9119、9119G、9105、9120、9120G、9121、9121G、9122、9122A、9122K、9122G、9123、9123A、9123G、9124、9124A、9125、9126、9127、9128、9129、9130、9131、9132、9133、8411、8412、8413、8414、8415、8416、8417、8418、8419、7711、7712、7713、7714、7715、7716、7717、7718、7719
Trade Mark:	N/A

Measurement Procedure Used:

APPLICABLE STANDARDS	
STANDARD	**TEST RESULT**
FCC 47 CFR Part 2, Subpart J FCC 47 CFR Part 15, Subpart C	**PASS**

The above equipment was tested by EMTEK(SHENZHEN) CO., LTD. The test data, data evaluation, test procedures, and equipment configurations shown in this report were made in accordance with the procedures given in ANSI C63.10 (2013) and the energy emitted by the sample EUT tested as described in this report is in compliance with the requirements of FCC Rules Part 2 and Part 15.249

The test results of this report relate only to the tested sample identified in this report

Date of Test : October 11, 2017 to October 13, 2017

Prepared by : Joanna Jiao /Editor

Reviewer : Joe Xia/Editor

Approve & Authorized Signer : Lisa Wang/Manager

2 EUT TECHNICAL DESCRIPTION

Product	R/C CAR
Modulation:	GFSK
Operating Frequency Range:	CH0:2405 MHz Ch1:2440 MHz CH2:2475 MHz
Antenna Type:	PCB Antenna
Antenna Gain:	0 dBi
Power supply	☒DC3.0V via 2*AA battery
	☐Adapter:AC120V/60Hz

Note: for more details, please refer to the User's manual of the EUT.

3 SUMMARY OF TEST RESULT

FCC Part Clause	Test Parameter	Verdict	Remark
15.207	Conducted Emission	N/A	
15.209	Radiated Emission	PASS	
15.249	Radiated Spurious Emission	PASS	
15.249	Band edge test	PASS	
15.249	20dB Bandwidth	PASS	
15.203	Antenna Requirement	PASS	
NOTE1: N/A (Not Applicable) NOTE2: The report use radiated measurements in the restricted frequency bands. In addition, the radiated test is also performed to ensure the emissions emanating from the device cabinet also comply with the applicable limits.			

RELATED SUBMITTAL(S) / GRANT(S):

This submittal(s) (test report) is intended for FCC ID: T9D-NST9111 filing to comply with Section 15.249 of the FCC Part 15, Subpart C Rules.

4 TEST METHODOLOGY

4.1 GENERAL DESCRIPTION OF APPLIED STANDARDS

According to its specifications, the EUT must comply with the requirements of the following standards:
FCC 47 CFR Part 2, Subpart J
FCC 47 CFR Part 15, Subpart C

4.2 MEASUREMENT EQUIPMENT USED

4.2.1 Conducted Emission Test Equipment

EQUIPMENT TYPE	MFR	MODEL NUMBER	SERIAL NUMBER	LASTCAL.	DUE CAL.
Test Receiver	Rohde & Schwarz	ESCI	26115-010-0027	May 20, 2017	May 19, 2018
L.I.S.N.	Rohde & Schwarz	ENV216	101161	May 20, 2017	May 19, 2018
50ΩCoaxial Switch	Anritsu	MP59B	6100175589	May 21, 2017	May 20, 2018
Voltage Probe	Rohde & Schwarz	ESH2-Z3	100122	May 21, 2017	May 20, 2018
Pulse Limiter	Rohde & Schwarz	ESH3-Z2	100006	May 20, 2017	May 19, 2018
I.S.N	Teseq GmbH	ISN T800	30327	May 21, 2017	May 20, 2018

4.2.2 Radiated Emission Test Equipment

EQUIPMENT TYPE	MFR	MODEL NUMBER	SERIAL NUMBER	LAST CAL.	DUE CAL.
EMI Test Receiver	Rohde & Schwarz	ESU	1302.6005.26	May 21, 2017	May 20, 2018
Pre-Amplifier	HP	8447F	2944A07999	May 20, 2017	May 19, 2018
Bilog Antenna	Schwarzbeck	VULB9163	142	May 20, 2017	May 19, 2018
Loop Antenna	ARA	PLA-1030/B	1029	May 20, 2017	May 19, 2018
Horn Antenna	Schwarzbeck	BBHA 9170	BBHA9170399	May 21, 2017	May 20, 2018
Horn Antenna	Schwarzbeck	BBHA 9120	D143	May 20, 2017	May 19, 2018
Cable	Schwarzbeck	AK9513	ACRX1	May 21, 2017	May 20, 2018
Cable	Rosenberger	N/A	FP2RX2	May 21, 2017	May 20, 2018
Cable	Schwarzbeck	AK9513	CRPX1	May 21, 2017	May 20, 2018
Cable	Schwarzbeck	AK9513	CRRX2	May 21, 2017	May 20, 2018

4.2.3 Radio Frequency Test Equipment

EQUIPMENT TYPE	MFR	MODEL NUMBER	SERIAL NUMBER	LASTCAL.	DUE CAL.
Spectrum Analyzer	Agilent	E4407B	88156318	May 21, 2017	May 20, 2018
Signal Analyzer	Agilent	N9010A	My53470879	May 21, 2017	May 20, 2018
Power meter	Anritsu	ML2495A	0824006	May 21, 2017	May 20, 2018
Power sensor	Anritsu	MA2411B	0738172	May 21, 2017	May 20, 2018

Remark: *Each piece of equipment is scheduled for calibration once a year.*

4.3 DESCRIPTION OF TEST MODES

The EUT has been tested under its typical operating condition.
The EUT configuration for testing is installed on RF field strength measurement to meet the Commissions requirement and operating in a manner which intends to maximize its emission characteristics in a continuous normal application.

The Transmitter was operated in the normal operating mode. The TX frequency was fixed which was for the purpose of the measurements.

Test of channel included the lowest and middle and highest frequency to perform the test, then record on this report.

Test Frequency and channel

Lowest Frequency		Middle Frequency		Highest Frequency	
Channel	Frequency (MHz)	Channel	Frequency (MHz)	Channel	Frequency (MHz)
0	2405	1	2440	2	2475

5 FACILITIES AND ACCREDITATIONS

5.1 FACILITIES

All measurement facilities used to collect the measurement data are located at

Bldg 69, Majialong Industry Zone District, Nanshan District, Shenzhen, China
The sites are constructed in conformance with the requirements of ANSI C63.7, ANSI C63.10 and CISPR Publication 22.

5.2 LABORATORY ACCREDITATIONS AND LISTINGS

Site Description

EMC Lab.	:	Accredited by CNAS,2016.10.24 The certificate is valid until 2022.10.28 The Laboratory has been assessed and proved to be in compliance with CNAS-CL01:2006 (identical to ISO/IEC 17025:2005) The Certificate Registration Number is L2291. Accredited by TUV Rheinland Shenzhen 2016.5.19 The Laboratory has been assessed according to the requirements ISO/IEC 17025. Accredited by FCC, August 03, 2017 Designation Number: CN1204 Test Firm Registration Number: 882943 Accredited by A2LA, July 31, 2017 The Certificate Registration Number is 4321.01. Accredited by Industry Canada, November 24, 2015 The Certificate Registration Number is 4480A

6 TEST SYSTEM UNCERTAINTY

The following measurement uncertainty levels have been estimated for tests performed on the apparatus:

Parameter	Uncertainty
Radio Frequency	±1x10^-5
Maximum Peak Output Power Test	±1.0dB
Conducted Emissions Test	±2.0dB
Radiated Emission Test	±2.0dB
Occupied Bandwidth Test	±1.0dB
Band Edge Test	±3dB
All emission, radiated	±3dB
Antenna Port Emission	±3dB
Temperature	±0.5℃
Humidity	±3%

Measurement Uncertainty for a level of Confidence of 95%

7 SETUP OF EQUIPMENT UNDER TEST

7.1 RADIO FREQUENCY TEST SETUP 1

The EUT wireless component's antenna ports(s) of the EUT are connected to the measurement instrument per an appropriate attenuator. The EUT is controlled by PC/software to emit the specified signals for the purpose of measurements.

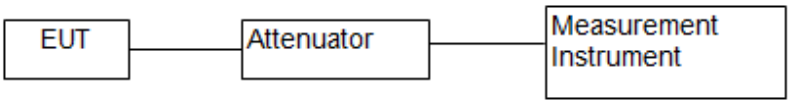

7.2 RADIO FREQUENCY TEST SETUP 2

The test site semi-anechoic chamber has met the requirement of NSA tolerance 4 dB according to the standards: ANSI C63.10. The test distance is 3m.The setup is according to the requirements in Section 13.1.4.1 of ANSI C63.10-2013 and CAN/CSA-CEI/IEC CISPR 22.

Below 30MHz：

The EUT is placed on a turntable 0.8 meters above the ground in the chamber, 3 meter away from the antenna (loop antenna). The Antenna should be positioned with its plane vertical at the specified distance from the EUT and rotated about its vertical axis for maximum response at each azimuth about the EUT. The center of the loop shall be 1 m above the ground. For certain applications, the loop antenna plane may also need to be positioned horizontally at the specified distance from the EUT.

30MHz-1GHz：

The EUT is placed on a turntable 0.8 meters above the ground in the chamber, 3 meter away from the antenna. The maximal emission value is acquired by adjusting the antenna height, polarisation and turntable azimuth. Normally, the height range of antenna is 1 m to 4 m, the azimuth range of turntable is 0° to 360°, and the receive antenna has two polarizations Vertical (V) and Horizontal (H).

Above 1GHz：

The EUT is placed on a turntable 1.5 meters above the ground in the chamber, 3 meter away from the antenna. The maximal emission value is acquired by adjusting the antenna height, polarisation and turntable azimuth. Normally, the height range of antenna is 1 m to 4 m, the azimuth range of turntable is 0° to 360°, and the receive antenna has two polarizations Vertical (V) and Horizontal (H).

(a) Radiated Emission Test Set-Up, Frequency Below 30MHz

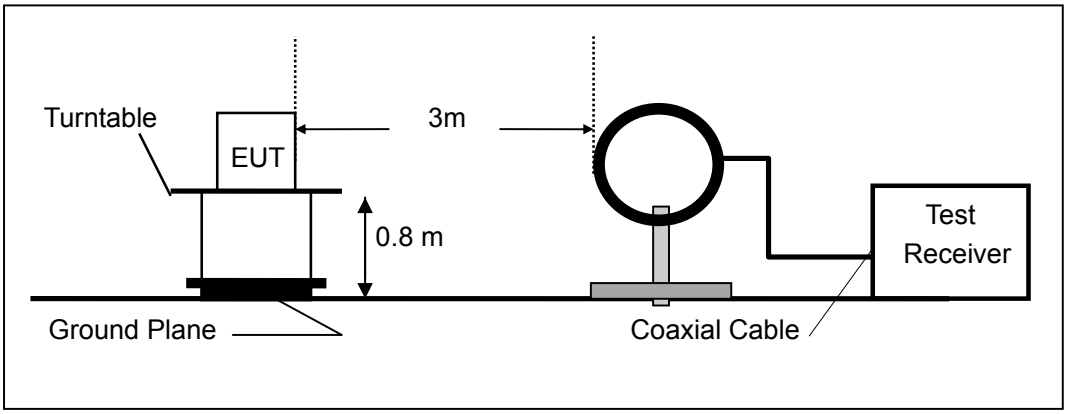

(b) Radiated Emission Test Set-Up, Frequency Below 1000MHz

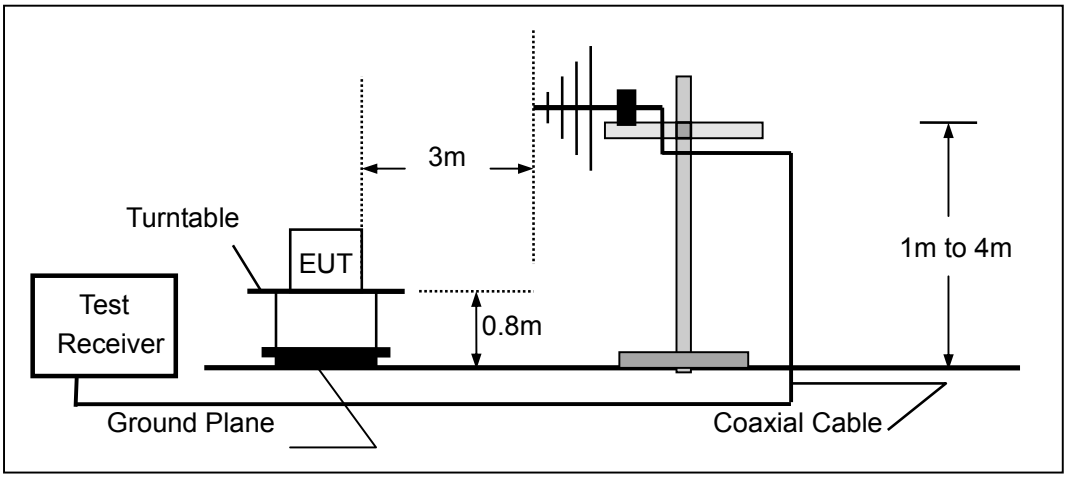

(c) Radiated Emission Test Set-Up, Frequency above 1000MHz

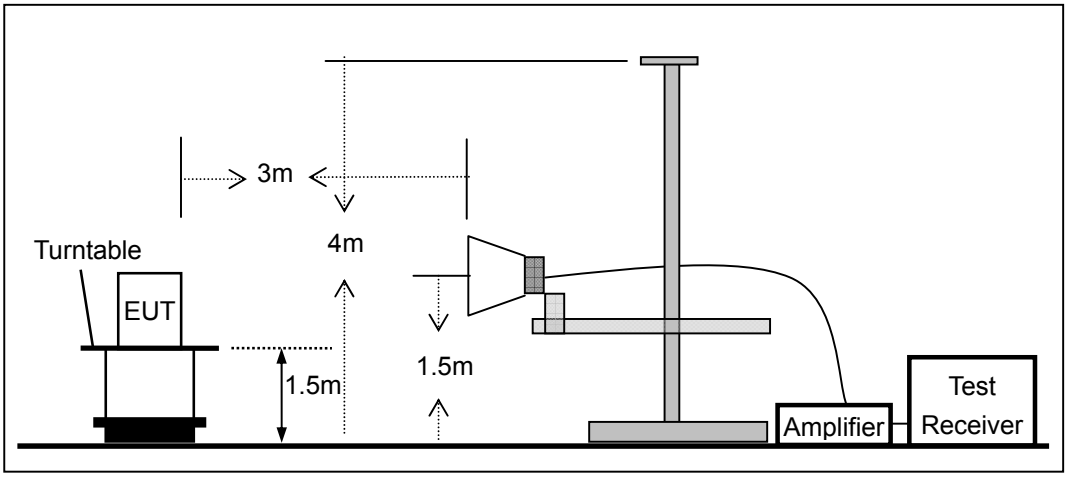

7.3 CONDUCTED EMISSION TEST SETUP

The mains cable of the EUT (maybe per AC/DC Adapter) must be connected to LISN. The LISN shall be placed 0.8 m from the boundary of EUT and bonded to a ground reference plane for LISN mounted on top of the ground reference plane. This distance is between the closest points of the LISN and the EUT. All other units of the EUT and associated equipment shall be at least 0.8m from the LISN.

Ground connections, where required for safety purposes, shall be connected to the reference ground point of the LISN and, where not otherwise provided or specified by the manufacturer, shall be of same length as the mains cable and run parallel to the mains connection at a separation distance of not more than 0.1 m.

According to the requirements in Section 13.1.4.1 of ANSI C63.10-2013 Conducted emissions from the EUT measured in the frequency range between 0.15 MHz and 30 MHz using CISPR Quasi-Peak and average detector mode.

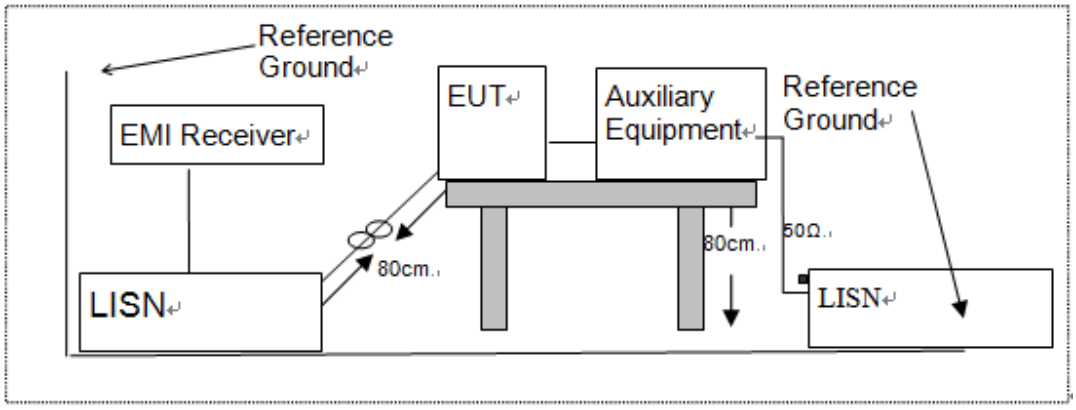

7.4 SUPPORT EQUIPMENT

EUT Cable List and Details			
Cable Description	Length (m)	Shielded/Unshielded	With / Without Ferrite
/	/	/	/

Auxiliary Cable List and Details			
Cable Description	Length (m)	Shielded/Unshielded	With / Without Ferrite
/	/	/	/

Notes:

1. *All the equipment/cables were placed in the worst-case configuration to maximize the emission during the test.*
2. *Grounding was established in accordance with the manufacturer's requirements and conditions for the intended use.*

8 TEST REQUIREMENTS

8.1 BANDWIDTH TEST

8.1.1 Applicable Standard

According to FCC Part 15.249

8.1.2 Conformance Limit

N/A

8.1.3 Test Configuration

Test according to clause 7.1 radio frequency test setup 1

8.1.4 Test Procedure

The EUT was operating in controlled its channel. Printed out the test result from the spectrum by hard copy function.
The RF output of EUT was connected to the spectrum analyzer by RF cable and attenuator. The path loss was compensated to the results for each measurement.
Set to the maximum power setting and enable the EUT transmit continuously
Set RBW = 30 kHz.
Set the video bandwidth (VBW) =100 kHz.
Set Span=2 times OBW
Set Detector = Peak.
Set Trace mode = max hold.
Set Sweep = auto couple.
Allow the trace to stabilize.
Measure the maximum width of the emission that is constrained by the frequencies associated with the two outermost amplitude points (upper and lower frequencies) that are attenuated by 20 dB relative to the maximum level measured in the fundamental emission.
Measure and record the results in the test report.

Test Results

Temperature:	24° C
Relative Humidity:	53%
ATM Pressure:	1011 mbar

Operation Mode	Channel Number	Channel Frequency (MHz)	20db Measurement Bandwidth (MHz)	Limit (kHz)	Verdict
GFSK	0	2405	1.1418	N/A	PASS
	1	2440	1.1114	N/A	PASS
	2	2475	1.1592	N/A	PASS
Note: N/A (Not Applicable)					

Test Model	Occupied Bandwidth GFSK Channel 0: 2405MHz

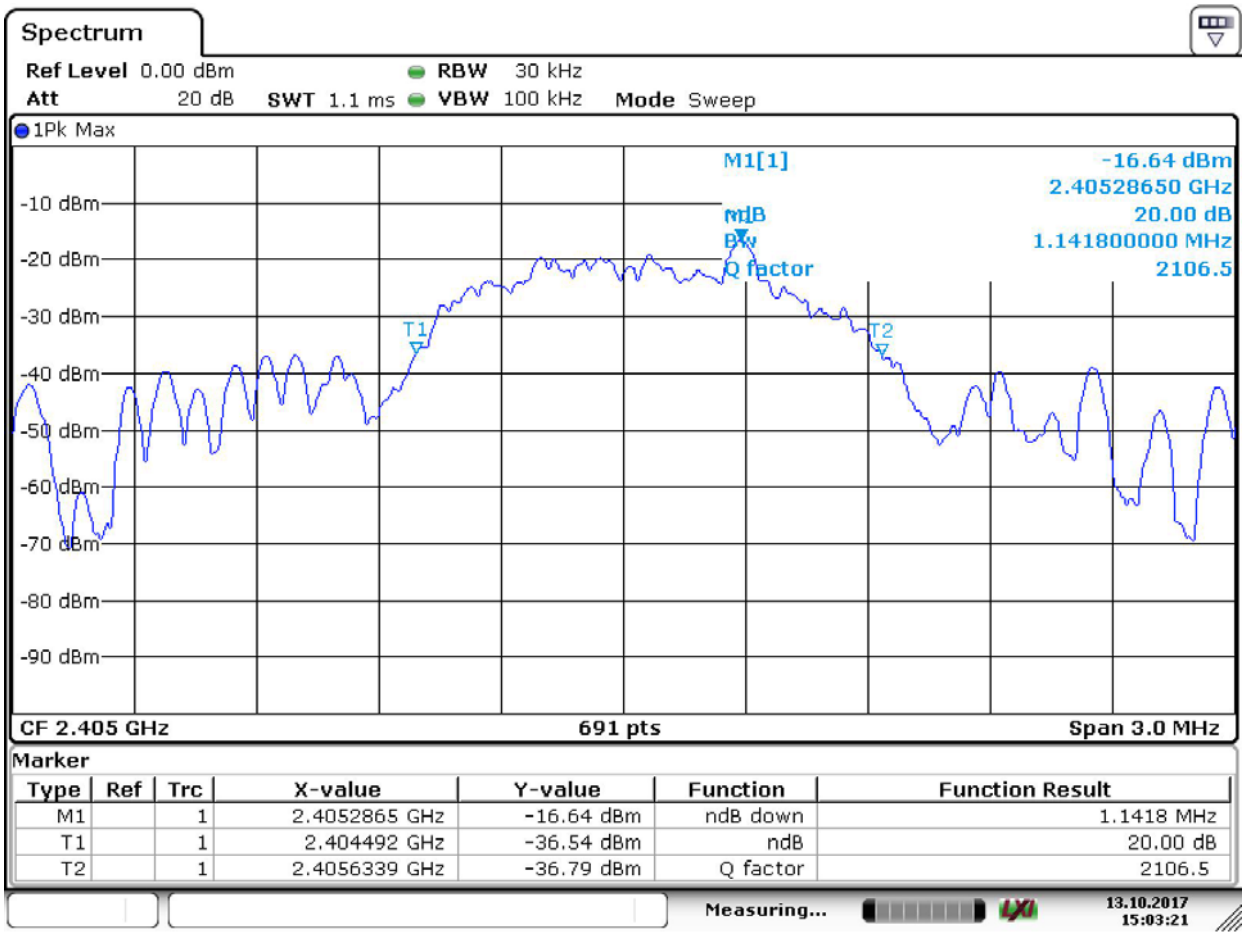

Date: 13.OCT.2017 15:03:21

Test Model	Occupied Bandwidth GFSK Channel 0: 2440MHz

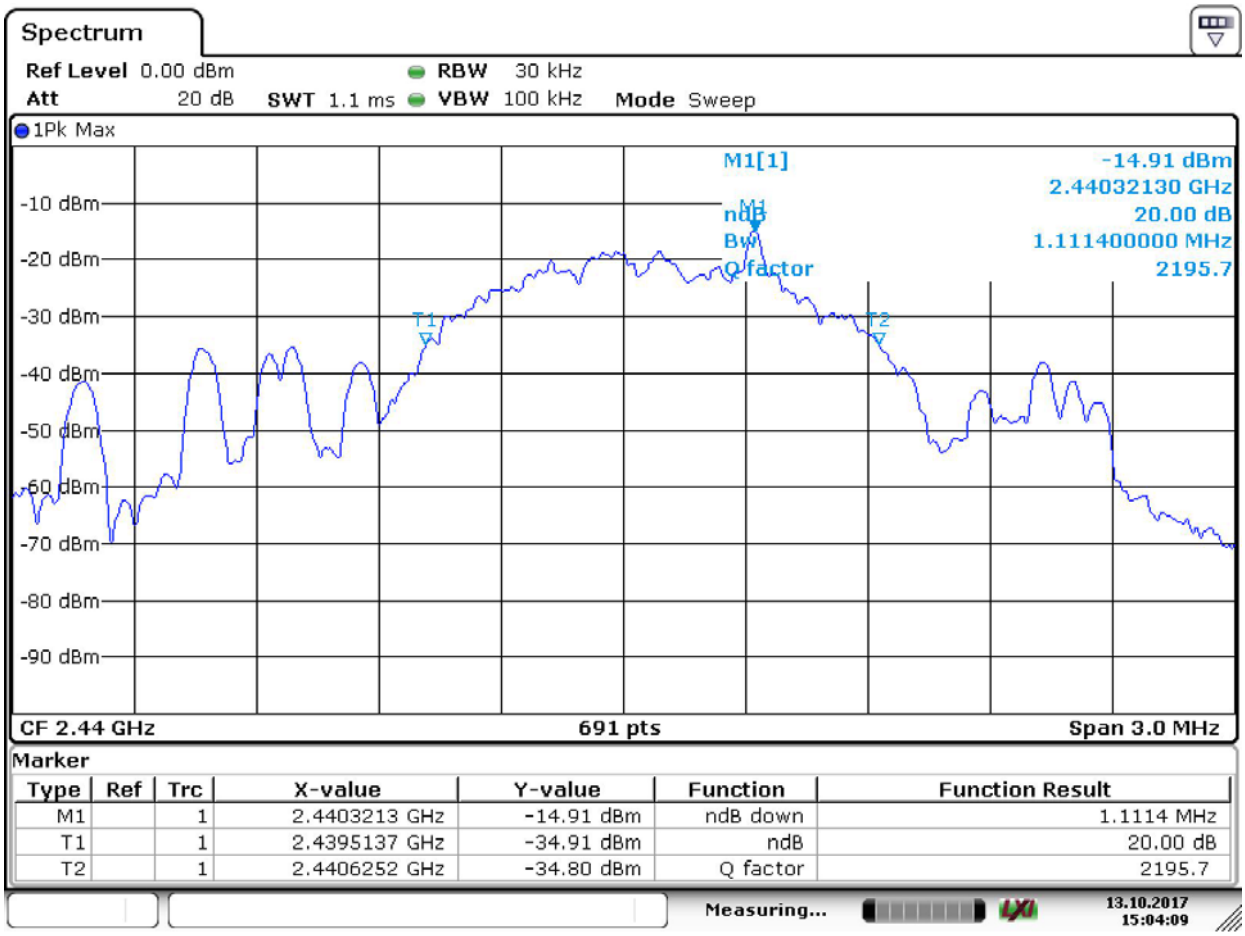

Date: 13.OCT.2017 15:04:09

Test Model	Occupied Bandwidth GFSK Channel 2: 2475MHz

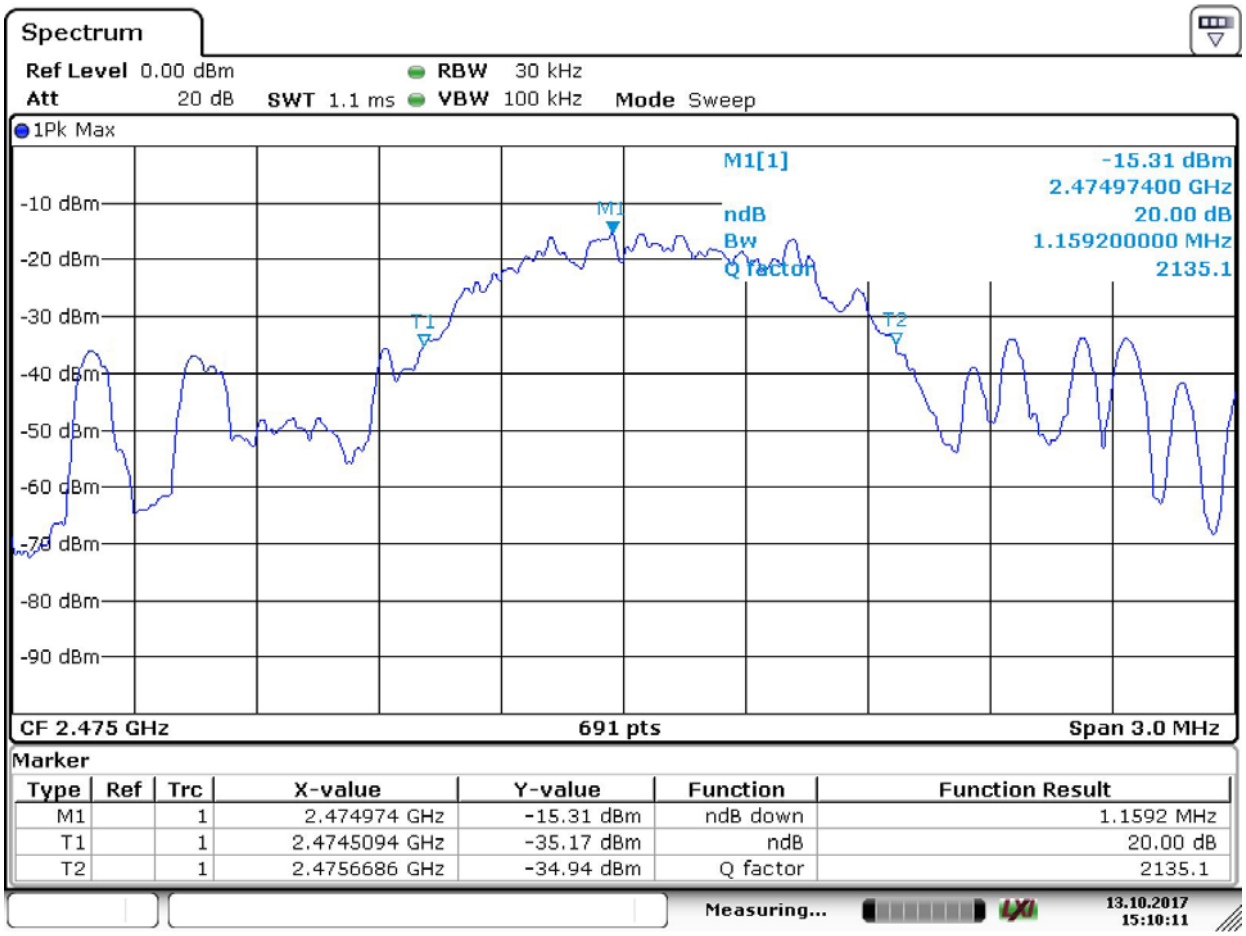

Marker

Type	Ref	Trc	X-value	Y-value	Function	Function Result
M1		1	2.474974 GHz	-15.31 dBm	ndB down	1.1592 MHz
T1		1	2.4745094 GHz	-35.17 dBm	ndB	20.00 dB
T2		1	2.4756686 GHz	-34.94 dBm	Q factor	2135.1

Date: 13.OCT.2017 15:10:11

8.2 RADIATED SPURIOUS EMISSION

8.2.1 Applicable Standard

According to FCC Part 15.249 and 15.209

8.2.2 Conformance Limit

According to FCC Part 15.249: radiated emissions which fall in the restricted bands, as defined in §15.205(a), must also comply with the radiated emission limits specified in §15.209(a) (see §15.205(c)).
According to FCC Part15.205, Restricted bands

MHz	MHz	MHz	GHz
0.090-0.110	16.42-16.423	399.9-410	4.5-5.15
10.495-0.505	16.69475-16.69525	608-614	5.35-5.46
2.1735-2.1905	16.80425-16.80475	960-1240	7.25-7.75
4.125-4.128	25.5-25.67	1300-1427	8.025-8.5
4.17725-4.17775	37.5-38.25	1435-1626.5	9.0-9.2
4.20725-4.20775	73-74.6	1645.5-1646.5	9.3-9.5
6.215-6.218	74.8-75.2	1660-1710	10.6-12.7
6.26775-6.26825	123-138	2200-2300	14.47-14.5
8.291-8.294	149.9-150.05	2310-2390	15.35-16.2
8.362-8.366	156.52475-156.52525	2483.5-2500	17.7-21.4
8.37625-8.38675	156.7-156.9	2690-2900	22.01-23.12
8.41425-8.41475	162.0125-167.17	3260-3267	23.6-24.0
12.29-12.293	167.72-173.2	3332-3339	31.2-31.8
12.51975-12.52025	240-285	3345.8-3358	36.43-36.5
12.57675-12.57725	322-335.4	3600-4400	(2)
13.36-13.41			

According to FCC Part15.205, the level of any transmitter spurious emission in Restricted bands shall not exceed the level of the emission specified in the following table

Restricted Frequency(MHz)	Field Strength (μV/m)	Field Strength (dBμV/m)	Measurement Distance
0.009-0.490	2400/F(KHz)	20 log (uV/m)	300
0.490-1.705	2400/F(KHz)	20 log (uV/m)	30
1.705-30	30	29.5	30
30-88	100	40	3
88-216	150	43.5	3
216-960	200	46	3
Above 960	500	54	3

Remark :1. Emission level in dBuV/m=20 log (uV/m)
2. Measurement was performed at an antenna to the closed point of EUT distance of meters.
3. Distance extrapolation factor =40log(Specific distance/ test distance)(dB);
Limit line=Specific limits(dBuV) + distance extrapolation factor.
for the frequency ranges below 30 MHz, a narrower RBW is used for these ranges but the measured value should add a RBW correction factor (RBWCF) where RBWCF [dB] =10*lg(100 [kHz]/narrower RBW [kHz]). , the narrower RBW is 1 kHz and RBWCF is 20 dB for the frequency 9 kHz to 150 kHz, and the narrower RBW is 10 kHz and RBWCF is 10 dB for the frequency 150 kHz to 30 MHz.

Field strength of fundamental and Field strength of harmonics Limit:

Fundamental frequency	Field strength of fundamental (millivolts/meter)	Field strength of harmonics (microvolts/meter)
902-928 MHz	50(94 dBV/m)	500(54 dBV/m)
2400-2483.5 MHz	50(94 dBV/m)	500(54 dBV/m)
5725-5875 MHz	50(94 dBV/m)	500(54 dBV/m)
24.0-24.25 GHz	250(108 dBV/m)	2500(68 dBV/m)

As shown in §15.35(b), for frequencies above 1000 MHz, the field strength limits in paragraphs (a) and (b) of this section are based on average limits. However, the peak field strength of any emission shall not exceed the maximum permitted average limits specified above by more than 20 dB under any condition of modulation

For this report

Fundamental Frequency	Field Strength Of Fundamental	Field Strength of Spurious Emissions
2400-2483.5 MHz	AV:94 dBuV/m at 3m distance	AV:54 dBuV/m at 3m distance
	PK:114 dBuV/m at 3m distance	PK:74 dBuV/m at 3m distance

8.2.3 Test Configuration

Test according to clause 7.2 radio frequency test setup 2

8.2.4 Test Procedure

This test is required for any spurious emission that falls in a Restricted Band, as defined in Section 15.205. It must be performed with the highest gain of each type of antenna proposed for use with the EUT. Use the following spectrum analyzer settings:
The EUT was placed on a turn table which is 0.8m above ground plane.
Maximum procedure was performed on the highest emissions to ensure EUT compliance.
Span = wide enough to fully capture the emission being measured
RBW = 1 MHz for f ≥ 1 GHz(1GHz to 25GHz), 100 kHz for f < 1 GHz(30MHz to 1GHz)
VBW ≥ RBW
Sweep = auto
Detector function = peak
Trace = max hold
Follow the guidelines in ANSI C63.10-2013 with respect to maximizing the emission by rotating the EUT, measuring the emission while the EUT is situated in three orthogonal planes (if appropriate), adjusting the measurement antenna height and polarization, etc. A pre-amp and a high pass filter are required for this test, in order to provide the measuring system with sufficient sensitivity. Allow the trace to stabilize. The peak reading of the emission, after being corrected by the antenna factor, cable loss, pre-amp gain, etc., is the peak field strength, which must comply with the limit specified in Section 15.35(b). Submit this data.
Now set the VBW to 10 Hz, while maintaining all of the other instrument settings. This peak level, once corrected, must comply with the limit specified in Section 15.209. If the dwell time per channel of the hopping signal is less than 100 ms, then the reading obtained with the 10 Hz VBW may be further adjusted by a “duty cycle correction factor”, derived from 20log(dwell time/100 ms), in an effort to demonstrate compliance with the 15.209 limit. Submit this data.
Repeat above procedures until all frequency measured was complete.

8.2.5 Test Results

Temperature:	26° C
Relative Humidity:	54%
ATM Pressure:	1011 mbar

■ Field Strength of the fundamental signal

Freq. (MHz)	Ant.Pol.	Emission Level(dBuV/m)		Limit 3m(dBuV/m)		Over(dB)	
	H/V	PK	AV	PK	AV	PK	AV
2405	V	94.93	71.60	114.00	94.00	-19.07	-22.40
2405	H	99.50	72.30	114.00	94.00	-14.50	-21.70
2440	V	82.91	60.20	114.00	94.00	-31.09	-33.80
2440	H	91.81	69.60	114.00	94.00	-22.19	-24.40
2475	V	85.56	66.90	114.00	94.00	-28.44	-27.10
2475	H	94.00	74.50	114.00	94.00	-20.00	-19.50

Note: (1) Correct Factor= Antenna Factor +Cable Loss- Amplifier Gain
(2) Emission Level= Reading Level+Probe Factor +Cable Loss

■ Spurious Emission below 30MHz (9KHz to 30MHz)

Freq. (MHz)	Ant.Pol.	Emission Level(dBuV/m)		Limit 3m(dBuV/m)		Over(dB)	
	H/V	PK	AV	PK	AV	PK	AV
--	--	--	--	--	--	--	--

Note: the amplitude of spurious emission that is attenuated by more than 20dB below the permissible limit has no need to be reported.
Distance extrapolation factor =40log(Specific distance/ test distance)(dB);
Limit line=Specific limits(dBuV) + distance extrapolation factor

■ Spurious Emission Above 1GHz (1GHz to 25GHz)

Test mode: GFSK Frequency: Channel 0: 2405MHz

Freq. (MHz)	Ant.Pol. H/V	Emission Level(dBuV/m) PK	Emission Level(dBuV/m) AV	Limit 3m(dBuV/m) PK	Limit 3m(dBuV/m) AV	Over(dB) PK	Over(dB) AV
4810.00	V	58.37	41.96	74	54	-15.63	-12.04
7215.00	V	53.70	39.19	74	54	-20.30	-14.81
9620.00	V	49.72	37.96	74	54	-24.28	-16.04
4810.00	H	57.54	41.84	74	54	-16.46	-12.16
7215.00	H	50.34	39.57	74	54	-23.66	-14.43
9620.00	H	47.66	36.44	74	54	-26.34	-17.56

Test mode: GFSK Frequency: Channel 1: 2440MHz

Freq. (MHz)	Ant.Pol. H/V	Emission Level(dBuV/m) PK	Emission Level(dBuV/m) AV	Limit 3m(dBuV/m) PK	Limit 3m(dBuV/m) AV	Over(dB) PK	Over(dB) AV
4880.00	V	57.39	43.43	74	54	-16.61	-10.57
7320.00	V	52.27	38.5	74	54	-21.73	-15.50
9760.00	V	48.96	36.43	74	54	-25.04	-17.57
4880.00	H	56.97	42.12	74	54	-17.03	-11.88
7320.00	H	52.37	39.08	74	54	-21.63	-14.92
9760.00	H	50.63	36.87	74	54	-23.37	-17.13

Test mode: GFSK Frequency: Channel 2: 2475MHz

Freq. (MHz)	Ant.Pol. H/V	Emission Level(dBuV/m) PK	Emission Level(dBuV/m) AV	Limit 3m(dBuV/m) PK	Limit 3m(dBuV/m) AV	Over(dB) PK	Over(dB) AV
4950.00	V	56.74	42.40	74	54	-17.26	-11.60
7425.00	V	52.13	39.29	74	54	-21.87	-14.71
9900.00	V	49.35	36.4	74	54	-24.65	-17.60
4950.00	H	55.85	41.10	74	54	-18.15	-12.90
7425.00	H	50.43	39.54	74	54	-23.57	-14.46
9900.00	H	49.78	37.24	74	54	-24.22	-16.76

Note: (1) All Readings are Peak Value (VBW=3MHz) and Peak Value (VBW=10Hz).
(2) Emission Level= Reading Level+Correct Factor +Cable Loss.
(3) Correct Factor= Ant_F + Cab_L - Preamp
(4)Data of measurement within this frequency range shown " -- " in the table above means the reading of emissions are attenuated more than 20dB below the permissible limits or the field strength is too small to be measured.

■ Spurious Emission in Restricted Band 2310-2390MHz and 2483.5-2500MHz

Frequency (MHz)	Polarity	PK(dBuV/m) (VBW=3MHz)	Limit 3m (dBuV/m)	Margin (dB)	AV(dBuV/m) (VBW=10Hz)	Limit 3m (dBuV/m)	Margin (dB)
2389.120	H	52.82	74	-21.18	32.40	54	-21.60
2388.960	V	47.47	74	-26.53	29.60	54	-24.40

Frequency (MHz)	Polarity	PK(dBuV/m) (VBW=3MHz)	Limit 3m (dBuV/m)	Margin (dB)	AV(dBuV/m) (VBW=10Hz)	Limit 3m (dBuV/m)	Margin (dB)
2483.929	H	48.77	74	-25.23	31.30	54	-22.70
2483.632	V	42.59	74	-31.41	28.40	54	-25.60

Note: (1) All Readings are Peak Value (VBW=3MHz) and Peak Value (VBW=10Hz).
(2) Emission Level= Reading Level+Correct Factor +Cable Loss.
(3) Correct Factor= Ant_F + Cab_L - Preamp
(4)Data of measurement within this frequency range shown " -- " in the table above means the reading of emissions are attenuated more than 20dB below the permissible limits or the field strength is too small to be measured.

All the modulation modes were tested, the data of the worst mode are described in the following table

Test Model	Spurious Emission in Restricted Band 2310-2390MHz GFSK Channel 0: 2405MHz	H

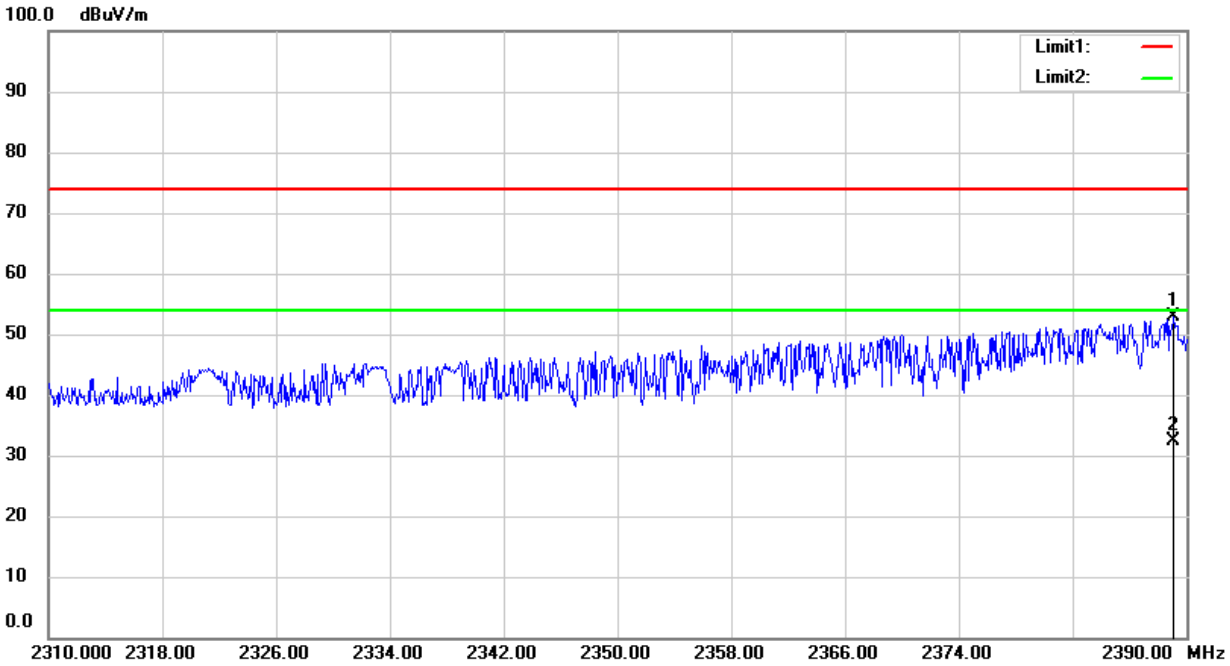

Test Model	Spurious Emission in Restricted Band 2310-2390MHz GFSK Channel 0: 2405MHz	V

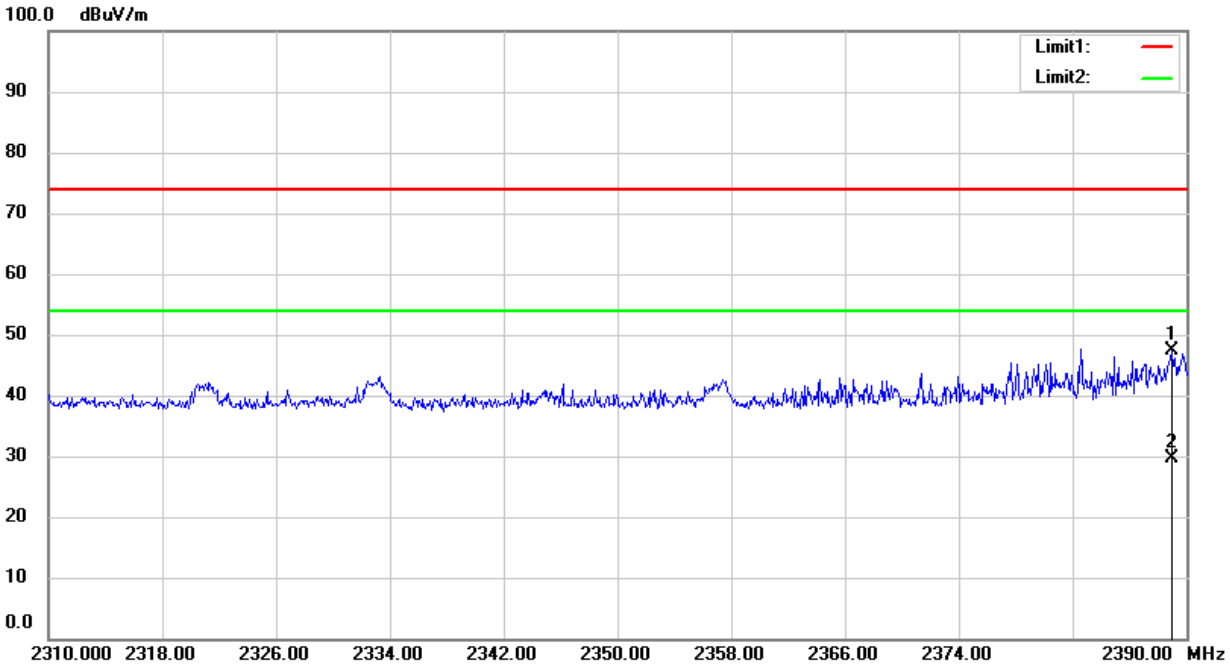

Test Model	Spurious Emission in Restricted Band 2483.5-2500MHz GFSK Channel 2: 2475MHz	H

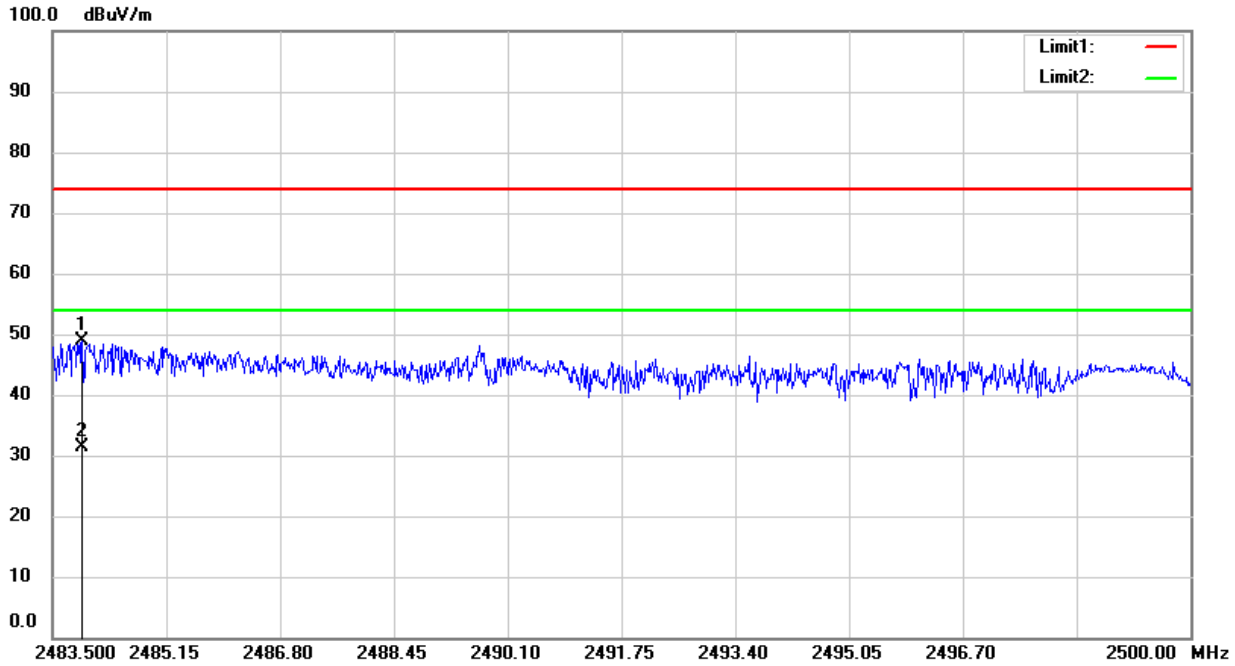

Test Model	Spurious Emission in Restricted Band 2483.5-2500MHz GFSK Channel 2: 2475MHz	V

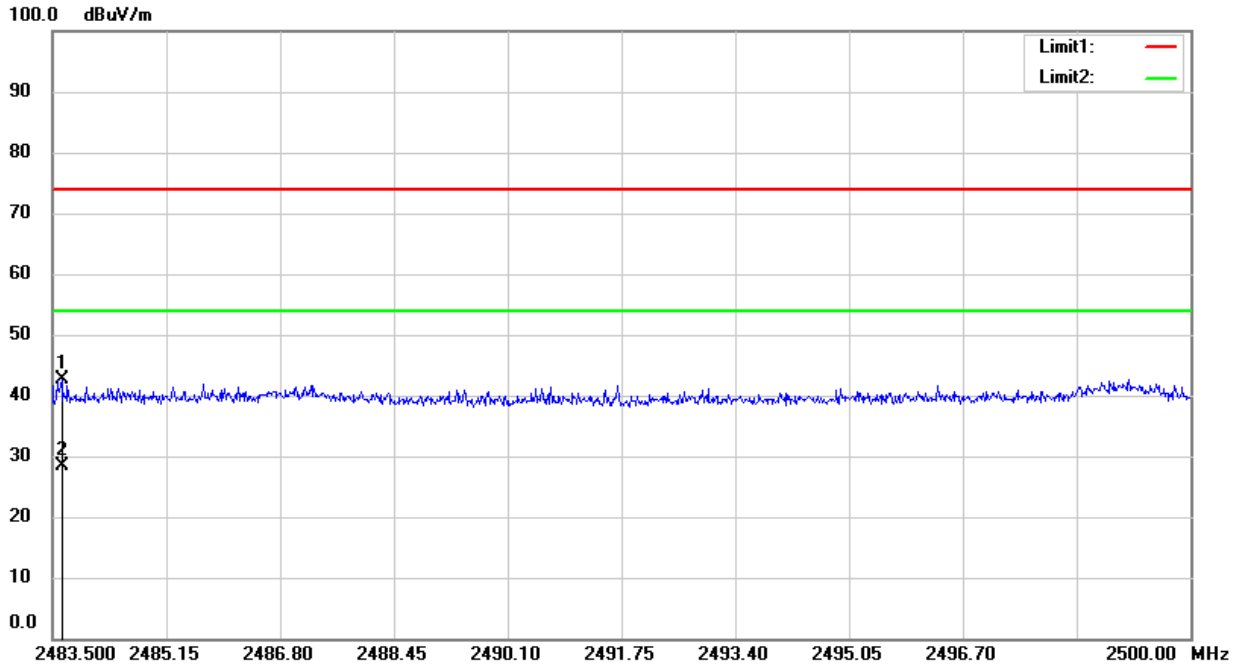

■ Spurious Emission below 1GHz (30MHz to 1GHz)

All modes have been tested, and the worst result recorded was report as below:

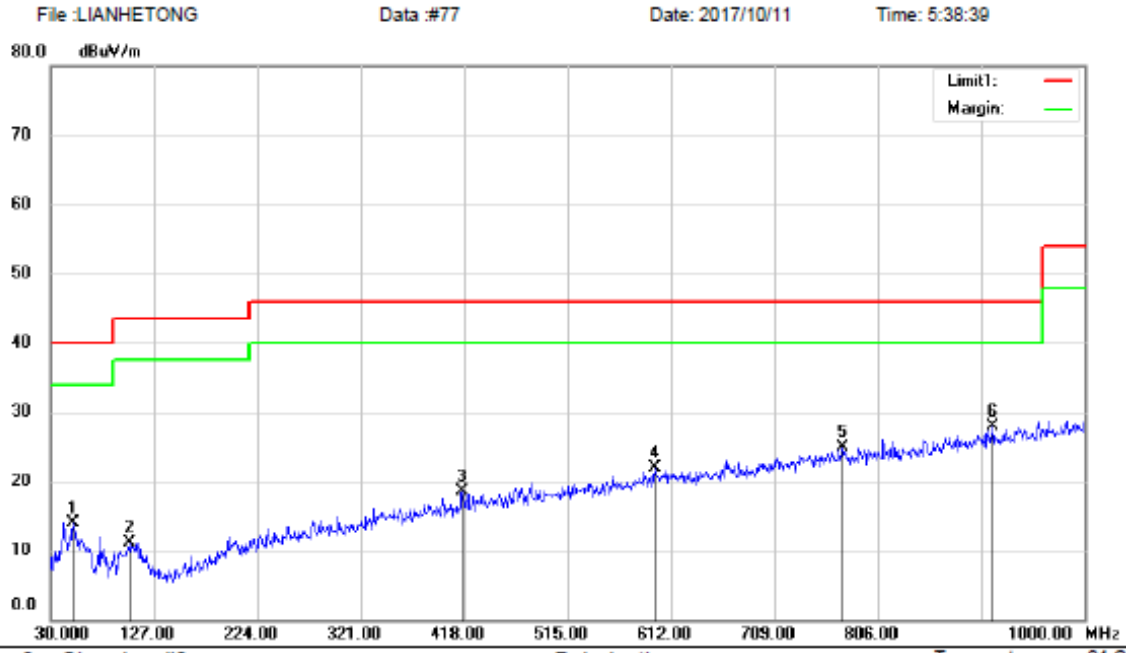

Site 3m Chamber #3 Polarization: *Horizontal* Temperature: 24 C

Limit: (RE)FCC PART 15C Power: DC 3V Humidity: 53 %

Mode:Low 2405

Note:

No.	Mk.	Freq.	Reading Level	Correct Factor	Measure-ment	Limit	Over		Antenna Height	Table Degree	
		MHz	dBuV	dB	dBuV/m	dBuV/m	dB	Detector	cm	degree	Comment
1		51.3400	27.94	-14.08	13.86	40.00	-26.14	QP			
2		104.6900	26.75	-15.56	11.19	43.50	-32.31	QP			
3		416.0600	27.59	-9.04	18.55	46.00	-27.45	QP			
4		596.4800	27.06	-5.14	21.92	46.00	-24.08	QP			
5		773.0200	27.42	-2.48	24.94	46.00	-21.06	QP			
6	*	913.6700	27.80	0.04	27.84	46.00	-18.16	QP			

File :LIANHETONG Data :#78 Date: 2017/10/11 Time: 5:39:52

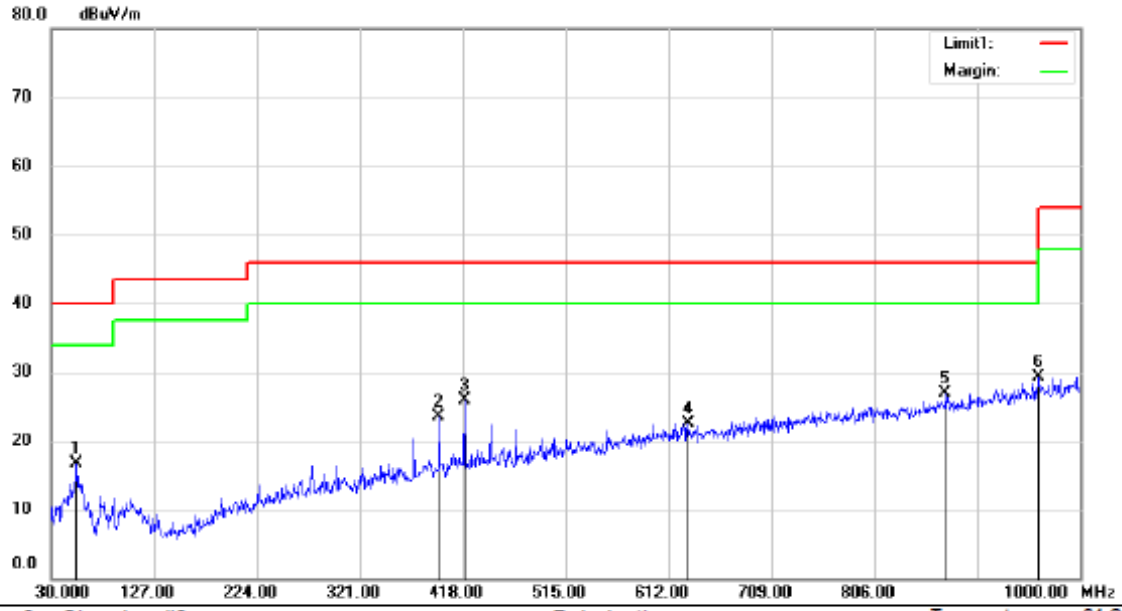

Site 3m Chamber #3 Polarization: *Vertical* Temperature: 24 C

Limit: (RE)FCC PART 15C Power: DC 3V Humidity: 53 %

Mode:Low 2405

Note:

No.	Mk.	Freq.	Reading Level	Correct Factor	Measure-ment	Limit	Over		Antenna Height	Table Degree	
		MHz	dBuV	dB	dBuV/m	dBuV/m	dB	Detector	cm	degree	Comment
1		54.2500	31.01	-14.28	16.73	40.00	-23.27	QP			
2		395.6900	33.22	-9.80	23.42	46.00	-22.58	QP			
3		419.9400	34.72	-8.87	25.85	46.00	-20.15	QP			
4		630.4300	27.19	-4.73	22.46	46.00	-23.54	QP			
5	*	872.9300	27.73	-0.73	27.00	46.00	-19.00	QP			
6		960.2300	28.62	0.71	29.33	54.00	-24.67	QP			

File :LIANHETONG Data :#80 Date: 2017/10/11 Time: 5:42:51

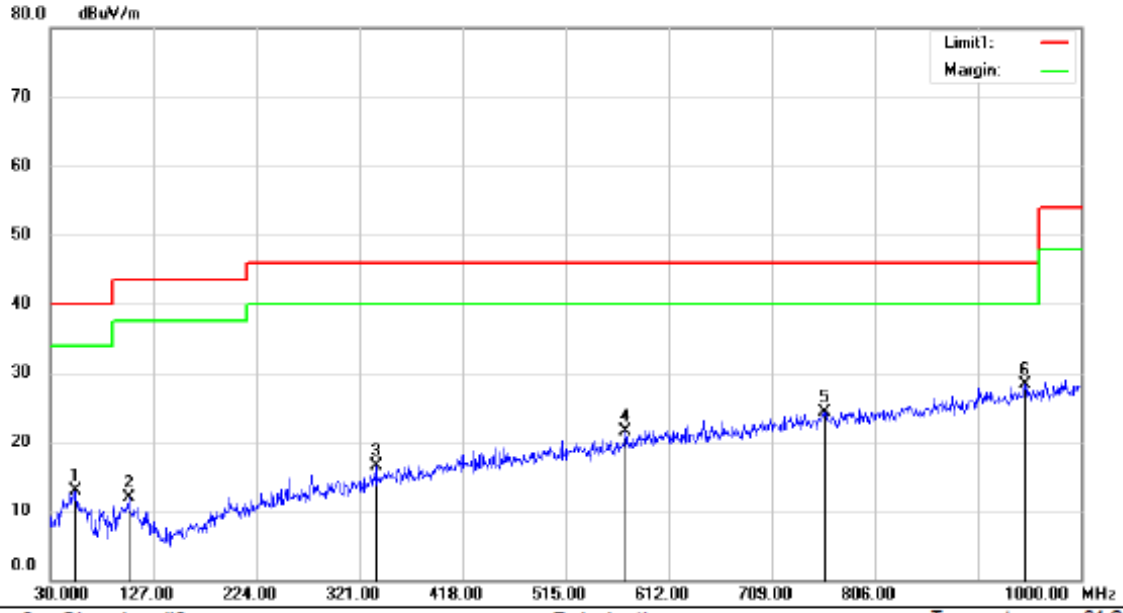

Site 3m Chamber #3 Polarization: *Horizontal* Temperature: 24 C

Limit: (RE)FCC PART 15C Power: DC 3V Humidity: 53 %

Mode:Mid 2440

Note:

No.	Mk.	Freq.	Reading Level	Correct Factor	Measure-ment	Limit	Over		Antenna Height	Table Degree	
		MHz	dBuV	dB	dBuV/m	dBuV/m	dB	Detector	cm	degree	Comment
1		53.2800	27.15	-14.16	12.99	40.00	-27.01	QP			
2		103.7200	27.59	-15.64	11.95	43.50	-31.55	QP			
3		336.5200	27.54	-10.99	16.55	46.00	-29.45	QP			
4		571.2600	27.42	-6.01	21.41	46.00	-24.59	QP			
5		758.4700	26.85	-2.52	24.33	46.00	-21.67	QP			
6	*	947.6200	27.70	0.55	28.25	46.00	-17.75	QP			

File :LIANHETONG Data :#79 Date: 2017/10/11 Time: 5:41:02

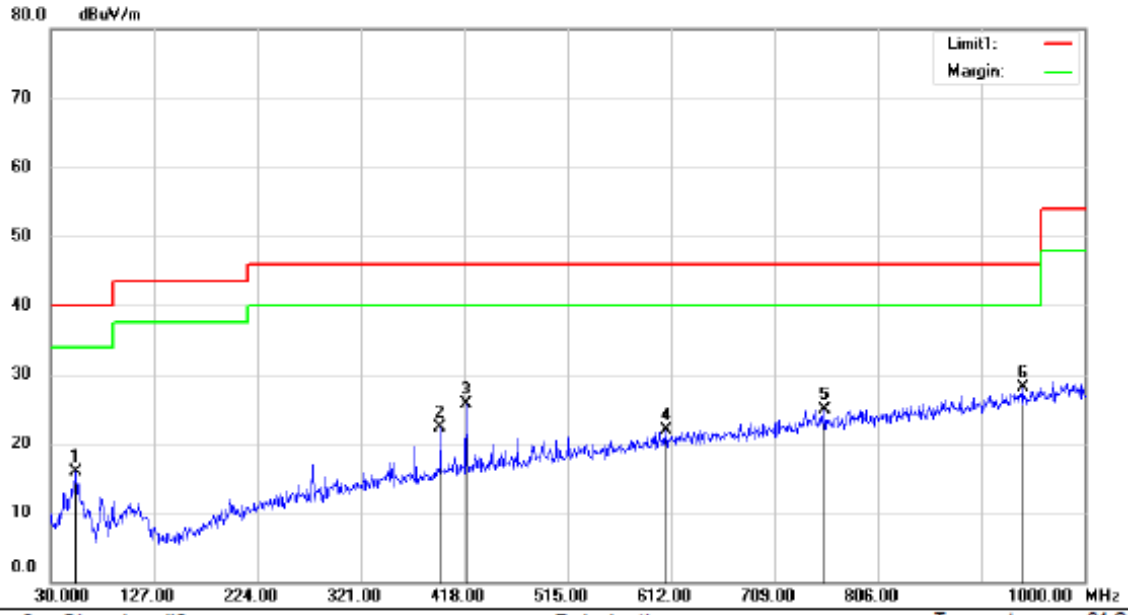

Site 3m Chamber #3 Polarization: *Vertical* Temperature: 24 C

Limit: (RE)FCC PART 15C Power: DC 3V Humidity: 53 %

Mode:Mid 2440

Note:

No.	Mk.	Freq.	Reading Level	Correct Factor	Measure-ment	Limit	Over		Antenna Height	Table Degree	
		MHz	dBuV	dB	dBuV/m	dBuV/m	dB	Detector	cm	degree	Comment
1		54.2500	30.10	-14.28	15.82	40.00	-24.18	QP			
2		395.6900	32.02	-9.80	22.22	46.00	-23.78	QP			
3		419.9400	34.60	-8.87	25.73	46.00	-20.27	QP			
4		607.1500	26.79	-4.86	21.93	46.00	-24.07	QP			
5		756.5300	27.56	-2.57	24.99	46.00	-21.01	QP			
6	*	941.8000	27.66	0.52	28.18	46.00	-17.82	QP			

File :LIANHETONG Data :#81 Date: 2017/10/11 Time: 5:44:02

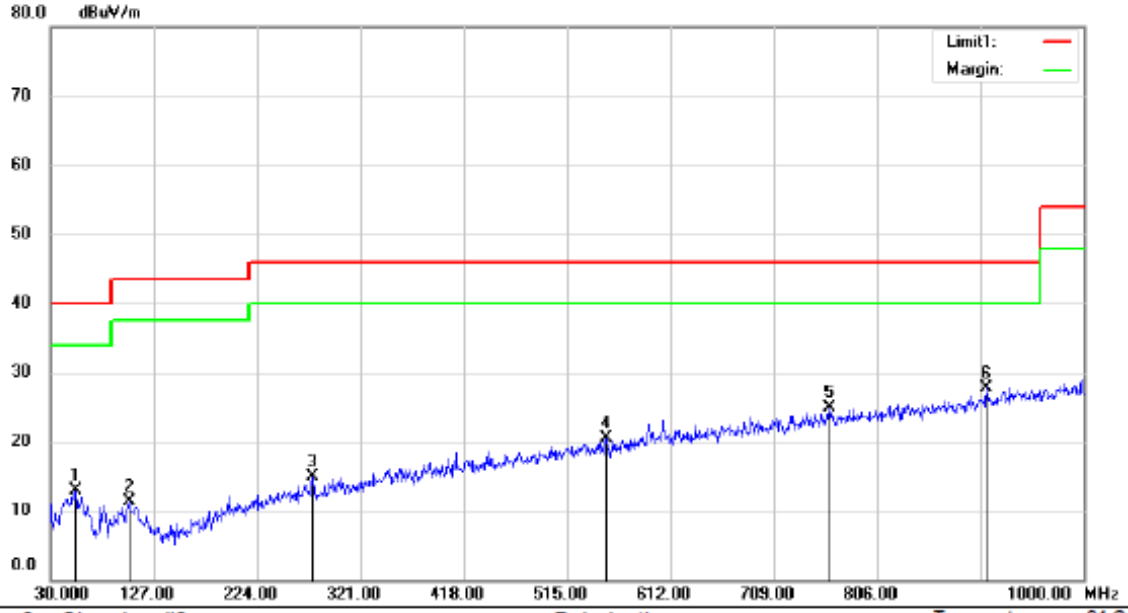

Site 3m Chamber #3 Polarization: *Horizontal* Temperature: 24 C

Limit: (RE)FCC PART 15C Power: DC 3V Humidity: 53 %

Mode:High 2475

Note:

No.	Mk.	Freq.	Reading Level	Correct Factor	Measure-ment	Limit	Over		Antenna Height	Table Degree	
		MHz	dBuV	dB	dBuV/m	dBuV/m	dB	Detector	cm	degree	Comment
1		54.2500	27.17	-14.28	12.89	40.00	-27.11	QP			
2		103.7200	26.88	-15.64	11.24	43.50	-32.26	QP			
3		276.3800	27.85	-12.94	14.91	46.00	-31.09	QP			
4		551.8600	27.10	-6.62	20.48	46.00	-25.52	QP			
5		761.3800	27.41	-2.49	24.92	46.00	-21.08	QP			
6	*	908.8200	27.86	-0.06	27.80	46.00	-18.20	QP			

File :LIANHETONG Data :#82 Date: 2017/10/11 Time: 5:45:26

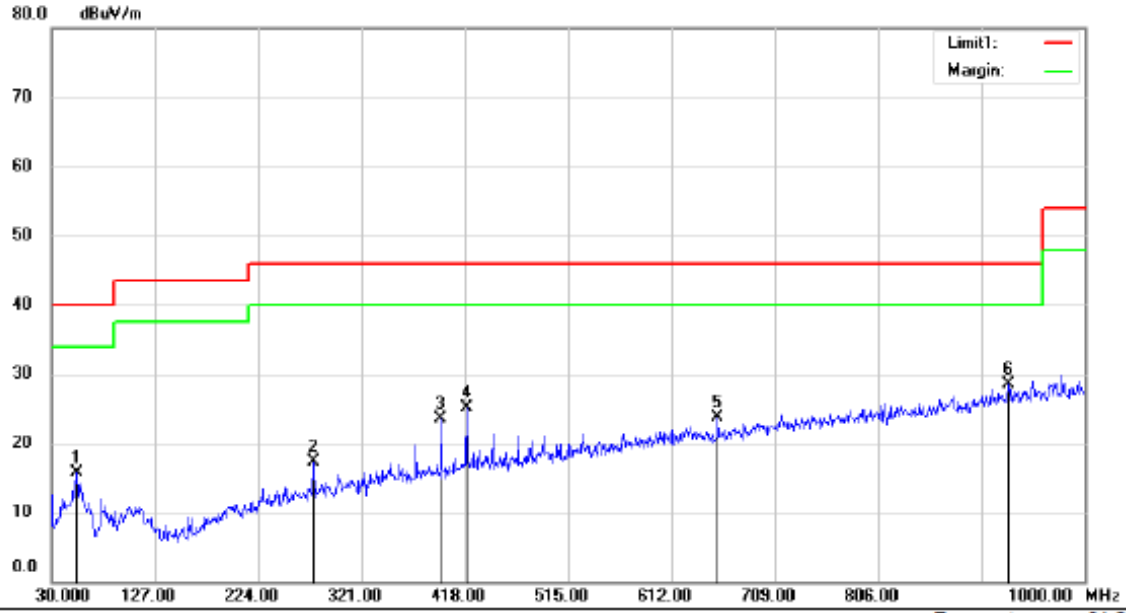

Site 3m Chamber #3 Polarization: *Vertical* Temperature: 24 C

Limit: (RE)FCC PART 15C Power: DC 3V Humidity: 53 %

Mode:High 2475

Note:

No.	Mk.	Freq.	Reading Level	Correct Factor	Measure-ment	Limit	Over		Antenna Height	Table Degree	
		MHz	dBuV	dB	dBuV/m	dBuV/m	dB	Detector	cm	degree	Comment
1		54.2500	29.92	-14.28	15.64	40.00	-24.36	QP			
2		276.3800	30.15	-12.94	17.21	46.00	-28.79	QP			
3		395.6900	33.25	-9.80	23.45	46.00	-22.55	QP			
4		419.9400	33.98	-8.87	25.11	46.00	-20.89	QP			
5		655.6500	28.26	-4.48	23.78	46.00	-22.22	QP			
6	*	928.2200	28.19	0.24	28.43	46.00	-17.57	QP			

8.3 CONDUCTED EMISSIONS TEST

8.3.1 Applicable Standard

According to FCC Part 15.207(a)

8.3.2 Conformance Limit

Conducted Emission Limit		
Frequency(MHz)	Quasi-peak	Average
0.15-0.5	66-56	56-46
0.5-5.0	56	46
5.0-30.0	60	50

Note: 1. The lower limit shall apply at the transition frequencies
2. The limit decreases in line with the logarithm of the frequency in the range of 0.15 to 0.50MHz.

8.3.3 Test Configuration

Test according to clause 7.3 conducted emission test setup

8.3.4 Test Procedure

The EUT was placed on a table which is 0.8m above ground plane.
Maximum procedure was performed on the highest emissions to ensure EUT compliance.
Repeat above procedures until all frequency measured were complete.

8.3.5 Test Results

N/A

NOTE1: The Devices Power Supply is DC3V via 2*AA battery,So this test item is not applicable.

8.4 ANTENNA APPLICATION

8.4.1 Antenna Requirement

Standard	Requirement
FCC CRF Part 15.203	An intentional radiator shall be designed to ensure that no antenna other than that furnished by the responsible party shall be used with the device. The use of a permanently attached antenna or of an antenna that uses a unique coupling to the intentional radiator shall be considered sufficient to comply with the provisions of this section. The manufacturer may design the unit so that a broken antenna can be replaced by the user, but the use of a standard antenna jack or electrical connector is prohibited. This requirement does not apply to carrier current devices or to devices operated under the provisions of §15.211, §15.213, §15.217, §15.219, or §15.221. Further, this requirement does not apply to intentional radiators that must be professionally installed, such as perimeter protection systems and some field disturbance sensors, or to other intentional radiators which, in accordance with §15.31(d), must be measured at the installation site. However, the installer shall be responsible for ensuring that the proper antenna is employed so that the limits in this part are not exceeded.

For intentional device, according to FCC 47 CFR Section 15.203, an intentional radiator shall be designed to ensure that no antenna other than that furnished by the responsible party shall be used with the device.

8.4.2 Result

PASS.

Note: ☒ Antenna use a permanently attached antenna which is not replaceable.
☐ Not using a standard antenna jack or electrical connector for antenna replacement
☐ The antenna has to be professionally installed (please provide method of installation)

which in accordance to section 15.203, please refer to the internal photos.