Laser Bar Code Scanner

The Scanner is a breakthrough in affordable laser scanning. The scanner has the scanning performance of more expensive laser scanners, the convenience of hand-held portability, and the advantage of optional Bluetooth® wireless technology. In store-and-forward mode you can capture approximately 500 (optional 4000) UPC bar code symbols, and then automatically upload them when you connect the scanner or move back into range. The Cordless Scanner has a 10 to 15 meter real-time operating range, and an unlimited store-and-forward range with automatic reconnection.

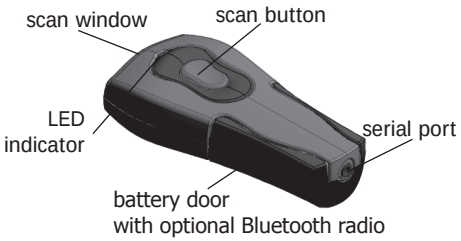

Setting Up Your Scanner

1. **Obtain software from the seller**.
2. **Install the software**. For instructions, see the **Software User's Guide**.
3. **Install the batteries in the scanner**. Follow the steps outlined in "Installing and Replacing Batteries."
4. For a cordless scanner **install the Bluetooth adapter in the host device**. The host device is the PC or PDA that will receive the bar codes from the scanner. For installation instructions, see the documentation provided with the adapter.
5. **Configure the software to connect to the scanner**.

   Note for Cordless Scanner:

   Place the scanner in discoverable mode by pressing the button.

   The default Bluetooth Passkey is 0000.
6. **Verify that the scanner is working correctly,** see the **Software User's Guide**.

Scanner Modes

The scanner runs in two modes: real-time and store-and-forward.

Real-time is when the scanner is connected to a cable or a Bluetooth host device. The scanner uploads the bar codes as you scan them.

Batch mode is when the scanner is disconnected or out of range. It stores the bar codes in memory. When you plug in the scanner or move it back into range, the scanner automatically connects to the host device and uploads the stored bar codes.

Three beeps indicates the scanner's memory is full. If this occurs, either connect the cable or move the scanner back into range of the Bluetooth host device and wake up the scanner by pushing the button. When connected, the scanner automatically uploads the saved bar codes and clears its memory.

Scanner
Cordless Scanner
Operator's Guide

Installing and Replacing Batteries

Use only AAA Alkaline batteries in your Scanner. Please remove the batteries when you are storing the scanner for more than 30 days.

1. Turn the scanner over so that the back faces up.
2. Remove the battery cover by pressing the button at the top of the cover, and moving the cover down.
3. If there are batteries in the scanner, remove them.
4. Insert the new batteries so that the positive end (+) is up on the outside batteries, and down on the middle battery.
5. Replace the battery cover by inserting the tabs at the top of the cover into the slots in the back of the scanner. Slide the cover up.

Battery Life:

Scanner - 100,000+ continuous scans or 24,000+ scans over 12 months at 100 scans/day

Cordless - 76,000+ continuous scans or 16,000+ scans over 8 months at 100 scans/day

How to Scan

1. **Aim Scanner** - Hold the scanner at a slight angle to the bar code you wish to scan. (Fig. 1)
2. **Press & Hold the Button** on top of the scanner to make the red laser line appear. The laser line should cover the entire bar code symbol.
3. **Release the Button after the Beep and the the green light blinks.** This indicates that the scanner has successfully scanned the bar code symbol. Try the sample bar code now.

Sample Bar Code

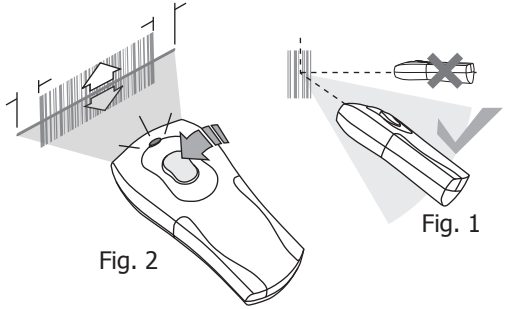

Fig. 1

Fig. 2

LED and Beep Signals

	Green LED	Beeper
Discoverable Mode*	Blinks two times every two seconds	None
Connected*	Blinks once every two seconds	None
Sleeping	Does not blink	None
Good Scan	Blinks once	Beeps once
Bar Code Memory Full	Blinks three times	Beeps three times
Uploading	Blinks twice per second while the data is uploading	None
Upload Complete	Blinks once	Three beeps that descend in pitch

*Cordless Scanner only

Limited Warranty

Manufacturer warrants that the scanner product will be free of defects in material and workmanship for one (1) year from the date of shipment. Manufacturer will, at its option, either repair, replace or refund the purchase price paid by buyer for the defective products. Such repair, replacement or refund shall be buyer's sole remedy in the event of Manufacturer's breach of this limited warranty. Repaired or replaced parts or product may include new, reconditioned or re-manufactured parts and equipment at Manufacturer's option. All costs associated with shipment to Manufacturer for warranty service, including but not limited to freight, duties, insurance and customs fees are buyer's responsibility. Manufacturer will pay the freight costs (duties, insurance, customs and any other fees are buyer's responsibility) associated with the return shipment to buyer. The method of shipment will be at Manufacturer's discretion. Repair or replacement of any parts or equipment does not extend the period of warranty provided for herein. THIS LIMITED WARRANTY IS MANUFACTURER'S ONLY WARRANTY. MANUFACTURER DOES NOT GIVE WARRANTIES OF MERCHANTABILITY OR WARRANTIES OF FITNESS FOR A PARTICULAR PURPOSE. To take advantage of this warranty, buyer should contact the seller not the Manufacturer.

The warranty set forth herein does not cover and Manufacturer will have no obligations hereunder if any non-conformance is caused in whole or in part by; accident, transportation, neglect, misuse, alteration, modification, or enhancement of the products or incorporation, interfacing, attachment of any feature, program, or device to the Products by a person or entity other than Manufacturer, failure to provide a suitable installation environment, use of the products for other than the specific purpose for which the products are designed or any use of the product not in accordance with the Operator's Guide or other misuse or abuse of the product.

Legal Notice

The Bluetooth word, mark, and logo are owned by the Bluetooth SIG, Inc. and any use of such marks by Manufacturer is under license.
This product is covered by one or more pending or issued patents.

DOCUMENT NUMBER: DA0116777-001 Rev. A

Regulatory & Safety Information

UL Listed to U.S. and Candadian Safety Standards

FCC Declaration of Conformity
This device complies with Part 15 of the FCC Rules. Operation is subject to the following two conditions: (1) this device may not cause harmful interference (2) this device must accept any interference received including interference that may cause undesired operations. This applies to all product options.

FCC Radio Frequency Interference Statement
NOTE: This equipment has been tested and found to comply with the limits for a Class B digital device, pursuant to Part 15 of the FCC Rules. These limits are designed to provide reasonable protection against harmful interference in a residential installation. This equipment generates, uses and can radiate radio frequency energy and, if not installed and used in accordance with the instructions, may cause harmful interference to radio communications. However, there is no guarantee that interference will not occur in a particular installation.

If this equipment does cause harmful interference to radio or television reception, which can be determined by turning the equipment off and on, the user is encouraged to try to correct the interference by one or more of the following measures:

- » Reorient or relocate the receiving antenna.
- » Increase the separation between the equipment and receiver
- » Connect the equipment into an outlet on a circuit different from that to which the receiver is connected.
- » Consult the dealer or an experienced radio/TV technician for help.

CAUTION: Changes or modifications to this equipment not expressly approved by Manufacturer could void the user's authority to operate this equipment.

Notice for Canada
Radio Interference Notice for Canada
This Class B digital apparatus complies with Canadian ICES-003.

Cet appareil numérique de la classe B est conforme á la norme NMB-003 du Canada.

Complies with 21 CFR 1040.10 and 1040.11 except for deviations pursuant to Laser Notice No. 50, dated July 26, 2001.

Laser

Type:	Semiconductor laser AlGaInP
Maximum output power:	5mW
Divergence:	X axis: 6-15 degrees Y axis: 22-38 degrees
Wavelength:	650-660nm

Laser

Typ:	Halbleiterlaser AlGaInP
Ausgabeleistung:	5 mW
Strahlabweichung:	X Achse: 6-15 Grad Y Achse: 22-38 Grad
Wellenlänge:	650-660nm

Compliance Information
Product Name: Laser Bar Code Scanner
Product Number: HS 2122, HS 2123 Options: All
The product herewith complies with the requirements of Low Voltage Directive 73/23/EEC, EMC Directive 89/336/EEC, WEEE Directive 2002/96/EC, and carries the "CE" mark accordingly.

Product Name: Cordless Laser Bar Code Scanner
Product Number: HS 2142, HS 2144 Options: All
The product herewith complies with the requirements of R&TTE Directive 99/5/EC, WEEE Directive 2002/96/EC, and carries the "CE" mark accordingly. The equipment also carries the Class 2 equipment identifier:

To comply with FCC RF exposure compliance requirements, this transmitter must not be colocated or operating in conjunction with any other antenna or transmitter.

Laser Safety
This device employs a laser. Do not remove the cover or attempt to service this device due to the possibility of eye damage.

Laser-Sicherheit
In das Gerät ist ein Laser eingebaut. Nehmen Sie die Abdeckung nicht ab und versuchen Sie nicht, das Gerät zu reparieren. Es besteht die Gefahr einer Augenverletzung.

Caution
Use of controls or adjustments or performance of procedures other than those specified herein may result in hazardous laser radiation exposure.

Warnung
Die Vornahme von Regelungen oder Einstellungen oder die Durchführung von Verfahren, die nicht in diesem Dokument angegeben sind, kann eine gefährliche Einwirkung von Laserstrahlung zur Forge haben.

CLASS 1 LASER PRODUCT
PRODOTTO AL LASER DI CLASSE 1
KLASSE 1 LASERPRODUKT
LASERPRODUKT KLASSE 1
LUOKKA 1 LASERTUOTE
PRODUTO LASER DA CLASSE 1
PRODUIT LASER DE CLASSE 1
PRODUCTO LASER DE LA CLASE 1
LASERPRODUKT DER KLASSE 1
LASERPRODUKT KLASS 1

Technical Specifications

Bar Codes Supported	UPC/EAN/JAN, Code 128, Code 39, ITF, and optional - RSS-14 and RSS-Limited
Minimum X Dimension	7.5 mil
Depth of Field	2.5 in to 5.5 in for 10 mil 2.5 in to 6 in for 13 mil 3 in to 7 in for 17 mil
Memory Capacity	Approximately 500 UPC bar codes (optional 4000)
Radio Specifications*	Bluetooth class 2, v2.0 compliant
Range*	10 m., 33 ft., line-of-sight
Cable	RS-232 compatible, DB9 to Stereo plug
Indicators	Visual and Audible
Operating Temperature	5º to 35º C
Storage Temperature	-40º to 70º C
Power	3 AAA Alkaline Batteries
Safety	EN60950-1:2002, EN60825-1:1994 +A1:2002 +A2:2001
EMC	EN300328-1:1997*, EN301489-1:2000*, EN301489-17:2000*, EN55022:1998, EN55024:1998, EN61000-4-2: 1995, EN61000-4-3:1997, FCC 47 CFR, Part 15 Class B

*Cordless Scanner only

Programming Your Laser Bar Code Scanner

Basic Functions

The Scanner can be customized to suit your needs. You can use the bar codes below to turn on or off the audible beep, clear the memory, or return the scanner to its factory default settings.

Enable All Beeps

Disable All Beeps

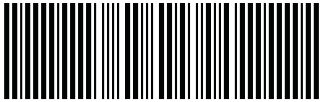

Clear Bar Codes

Return to Factory Defaults

Advanced Functions

The Scanner can be used in many legacy systems by programming it to be compatible with the settings for those systems. The following advanced settings allow you to change the default data format. For more information on these and other features of the scanner contact the seller.

Enable AIM Code

Disable AIM Code*

* Factory default settings

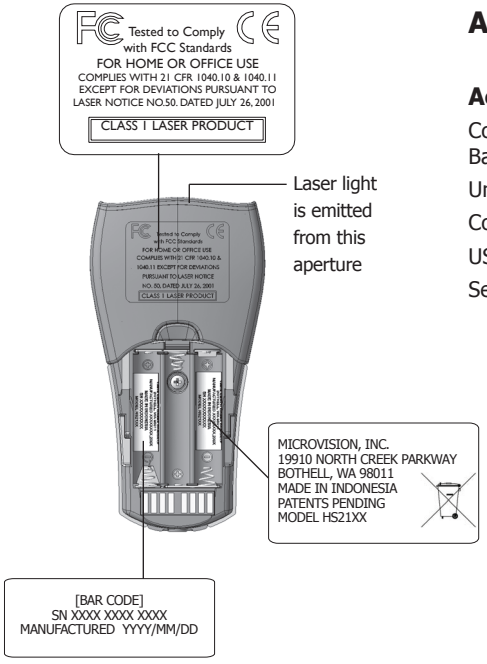

Disposal
Do not dispose of this product in unsorted municipal waste.
To dispose of this product, contact seller.

Accessories

Accessory	Model Number
Cordless Bluetooth USB Base Station	BT-2141-02
Universal Holster	HS 2120-02
Cordless Protective Boot	HS 2141-01
USB Cable Adapter	HS 2120-04
Serial Cable	HS 2120-05