GPS Receiver System

SOKKIA

GSR2700 IS

Operations Manual

GPS Receiver System

SOKKIA

GSR2700 IS

Operations Manual

Part Number 750-1-0055 Rev 0D

We welcome written communications regarding our products at:
POINT, Inc. 16900 West 118th Terrace, Olathe, Kansas 66061 U.S.A.

We strive to provide the highest quality documentation and welcome your feedback. If you have comments or suggestions about our online or printed documentation, e-mail us at documentation@point-inc.com. For technical questions, contact Technical Support (see Section 1.8, *Obtaining Technical Assistance*, page 9).

22 SEP 2005
750-1-0055 Rev 0D

Copyright Notice

© 2005 POINT, Inc. All rights reserved.

Do not reproduce, translate, store in a retrieval system, or transmit in any form or means (electronic, photocopy, record, or otherwise) without prior written permission from POINT, Inc. The copyright laws of the United States of America ("U.S.A.") and/or the jurisdiction where you are located determine any limits or restrictions of your rights with regard to this publication and the equipment.

Trademark Notice

SOKKIA® and Spectrum® are registered trademarks of SOKKIA Co. Ltd. SDR® is a registered trademark of POINT, Inc. The *Bluetooth*® word mark and logos are owned by the Bluetooth SIG, Inc. and any use of such marks by POINT, Inc. is under license. Pulse Aperture Correlator (PAC)™ and Pinwheel™ are trademarks of NovAtel Inc. All other product and brand names are trademarks or registered trademarks of their respective holders.

~~GSR2700 IS FCC and CE Notice~~

~~This receiver complies with the radiated and conducted emission limits for a Class B digital device, for both CISPR 22 and part 15 of the FCC Rules. These limits provide reasonable protection against harmful interference in a residential installation. This equipment generates, uses and can radiate radio frequency energy and, if not installed and used in accordance with the instructions, may cause harmful interference to radio communications. However, there is no guarantee that interference will not occur in a particular installation. If this equipment does cause harmful interference to radio or television reception, which can be determined by turning the equipment off and on, the user is encouraged to try to correct the interference by one or more of the following measures: reorient or relocate the receiving antenna; increase the separation between the equipment and the receiver; connect the equipment into an outlet on a circuit different from that to which the receiver is connected; or consult the dealer or an experienced radio/TV technician for help.~~

~~**IMPORTANT!** To maintain compliance with the limits of a Class B digital device, you must use properly shielded interface cables (Belden #9539 or equivalent) when you use the serial data ports, and double-shielded cables (Belden #9945 or equivalent) when you use the I/O strobe port.~~

~~**WARNING!** Changes or modifications to this equipment not expressly approved by POINT, Inc. could result in a violation of Part 15 of the FCC Rules.~~

Errata

GSR2700 IS Operations Manual

The *GSR2700 IS Operations Manual* covers the components, function, setup, and operation of the GSR2700 IS receiver. This errata document includes a correction to the *GSR2700 IS Operations Manual* (Rev 1, part number 750-1-0055) discovered since publication of the manual. This change is not included in the present manual.

GSR2700 IS FCC and CE Notice

Replace the GSR2700 IS FCC and CE Notice located at the beginning of the manual (on the back of the title page) with the following:

This device complies with CISPR 22 Class B.

This device complies with part 15 of the FCC Rules. Operation is subject to the following two conditions: (1) this device may not cause harmful interference, and (2) this device must accept any interference received, including interference that may cause undesired operation.

However, there is no guarantee that interference will not occur in a particular installation. If this equipment does cause harmful interference to radio or television reception, which can be determined by turning the equipment off and on, the user is encouraged to try and correct the interference by one or more of the following measures: a) reorient or relocate the receiving antenna; b) increase the separation between the equipment and the receiver; c) connect the equipment into an outlet on a circuit different from that to which the receiver is connected; or d) consult the dealer or an experienced radio/TV technician for help.

IMPORTANT! To maintain compliance with the limits of a Class B digital device, you must use properly shielded interface cables (Belden #9539 or equivalent) when you use the serial data ports, and double-shielded cables (Belden #9945 or equivalent) when you use the I/O strobe output.

WARNING! Changes or modifications to this equipment not expressly approved by POINT, Inc. could result in a violation of Part 15 of the FCC Rules and void the user's authority to operate this equipment.

RF Exposure: This device exceeds the FCC requirements for RF exposure when the antenna used for this transmitter has a separation distance of at least 20 cm from all persons.

Contents

Chapter 1 Introduction 1

1.1 About the GSR2700 IS 1
1.2 Features 2
1.3 System Components 3
1.4 Usage Cautions 6
1.5 Icons 7
1.6 Document Conventions 8
1.7 Finding More Information 8
1.8 Obtaining Technical Assistance 9

Chapter 2 GSR2700 IS Components 10

2.1 Enclosure Features 10
2.2 Ports 12
2.2.1 Antenna port 13
2.2.2 Power port and power input 14
2.2.3 Communication ports 14
2.3 Cables 14
2.4 Batteries 15
2.5 Memory 16
2.6 GPS Antenna 16
2.7 Internal Radio 17
2.8 Wireless Communication 17
2.9 Display Panel 18
2.10 Audible Annunciator 18

Chapter 3 Display Panel Operations 19

3.1 Power Button 20
3.2 Status Indicators 22
3.2.1 Receiver health 23

3.2.2 COM port communication status 24
3.2.3 Wireless communication status 25
3.2.4 Internal radio status 26
3.3 Gauges 27
3.3.1 Battery life gauge 27
3.3.2 Satellite tracking gauge 28
3.3.3 Memory gauge 29
3.3.4 Occupation timer gauge 30
3.4 Audible Annunciator 31

Chapter 4 System Setup 34

4.1 Setting Up at the Office 34
4.2 Setting Up for Field Operations 35
4.2.1 Typical RTK rover setup 35
4.2.2 Typical RTK base setup 37
4.2.3 Typical static setup 40

Chapter 5 Basic Operations 42

5.1 Turning the System On and Off 42
5.2 Power Source 42
5.2.1 Internal batteries 42
5.2.2 External power source 43
5.3 Powering Peripheral Devices 44
5.4 Power Consumption 44
5.5 Insufficient Power 45
5.6 Charging the Internal Batteries 46
5.7 Operation Overview 46

Chapter 6 Collecting Data 48

6.1 How Data is Stored 48
6.2 Data Collection Methods 48
6.2.1 Handheld data collection 48
6.2.2 Logging to the internal memory 49

6.3 Defining Data to be Collected 49
6.3.1 About the POWERUP configuration 49
6.3.2 Default POWERUP configuration 50
6.3.3 Transferring a POWERUP configuration 52
6.4 Data File Naming 53
6.5 Data Storage Capacity 54
6.6 Resetting the Receiver 54

Appendix A Technical Specifications 55

Glossary 61

Index 69

Tables

1 GSR2700 IS Feature Summary 2
2 Icon Summary 7
3 Port Summary 13
4 Display Panel Components 19
5 Power Button Functions 21
6 COM Port Communication Status LEDs..... 24
7 Wireless Communication Status LEDs..... 25
8 Internal Radio Status LEDs 26
9 Battery Life Gauge Indicators..... 28
10 Satellite Tracking Gauge Indicators 29
11 Memory Gauge Indicators 29
12 Occupation Timer Gauge Indicators..... 30
13 Audible Annunciator Conditions 32
14 POWERUP Configurations..... 51
15 Auto-Generated File Name Convention 53
16 Hours of Storage with 64 MB Logging Capacity..... 54
17 GSR2700 IS Technical Specifications..... 55

Figures

1 Standard System Components: RTK Rover 4
2 Standard System Components: RTK Base.....5
3 Optional Components 5
4 GPS Antenna and Display Panel 10
5 Ports.....11
6 Mounting Socket and Phase Center Offset Label.....11
7 Wireless Communication Antenna.....12
8 Ports and Labels 12
9 Internal Radio Antenna 13
10 GPS Antenna 16
11 Display Panel Components.....19
12 Power Button Functions.....21
13 Typical RTK Rover Setup 36
14 Typical RTK Base Setup (internal radio).....38
15 Typical RTK Base Setup (external radio).....38
16 Typical Static Setup 40

Chapter 1 Introduction

This manual provides complete information about your GSR2700 IS (integrated system) and its functions, including components, system setup, operations, and data collection.

1.1 About the GSR2700 IS

The Sokkia GSR2700 IS is a fully integrated, high-precision GPS solution for use in both RTK and post-processing applications. It integrates a dual-frequency receiver, antenna, memory, batteries, wireless connectivity, and differential correction radio into one lightweight and rugged component.

The GSR2700 IS supports wireless connections, using *Bluetooth*® wireless technology. The ability to transfer your data from the receiver to the data collector through a wireless communication connection provides a completely cable free option.

The GSR2700 IS offers differential correction transmission flexibility, using either an internal UHF or GSM radio. It also offers the innovative feature of voice messages to indicate receiver status during field operation.

Surveyors can use the GSR2700 IS for topographic, stake out, and control surveys. Excellent acquisition and reacquisition times mean this receiver continues to excel in environments where signal obstructions are present and frequent interruptions of signals can be expected. The GSR2700 IS features a rugged design for use in adverse environments, and is engineered to provide years of reliable operation.

You can use the GSR2700 IS handheld component (*SDR+*) and desktop post-processing software (*Spectrum*® *Survey Suite*) with the GSR2700 IS. When used together, these components provide a powerful, flexible, and easy-to-use GPS system.

1.2 Features

The GSR2700 IS is capable of the following modes of operation:

- Static post-processing
- Stop-and-go kinematic post-processing
- RTK base operation
- RTK rover operation
- Navigation
- Differential GPS

GSR2700 IS features are summarized in Table 1. For detailed technical information, see Appendix A, **Technical Specifications**, page 55.

Table 1: GSR2700 IS Feature Summary

General
Rugged, shock resistant, waterproof, buoyant enclosure
Bluetooth wireless technology
Capability to log data to internal memory
Low power consumption
Patented Pulse Aperture Correlator™ (PAC) technology for high accuracy GPS measurement and multipath rejection
Two bidirectional communication ports that can transfer data at rates up to 460,800 bps (serial via COM1), 115,200 bps (serial via COM2), and 1 Mbps (USB via COM2)
Full wavelength L1 and L2 GPS carrier measurements
Ionospheric corrections in position calculations
2 Input/Output strobe signals: mark input (position & time), 1PPS timing output
Fast reacquisition
Peripheral power supply output to COM1 and COM2
Optional internal UHF or GSM/GPRS radio for differential correction transmission or reception
LED display status indicators
Voice messages or sounds to indicate receiver status
Can receive SBAS corrections (WAAS/EGNOS)
64 MB internal memory standard. Options up to 2 GB available.

Table 1: GSR2700 IS Feature Summary (continued)

Output Data Log Formats
Proprietary ASCII and binary
CMR Standard: CMR, CMR+
NMEA Standard: GPGGA, GPGLL, GPGRS, GPGSA, GPGST, GPGSV, GPRMB, GPRMC, GPVTG, GPZDA
RTCM V2.3 Standard: Types 1, 2, 3, 9, 16, 18/19, 20/21, 22, 59FKP, 59N
RTCM V3.0 Standard: Types 1001–1006
RTCA Standard: Types 1, 7
NTRIP protocol support for RTK
Maximum Data Logging Rates (per second)
Computed Data: Position, speed, direction, & clock offset = 20
Measured Data (Observations): Pseudorange & carrier phase = 20

1.3 System Components

When you receive your GSR2700 IS system, ensure you have received all of the components for your specific configuration (rover or base).

Standard rover components are illustrated in Figure 1, *Standard System Components: RTK Rover*, page 4. Standard base components are illustrated in Figure 2, *Standard System Components: RTK Base*, page 5.

NOTE System components are illustrated with the assumption that an internal radio is being used.

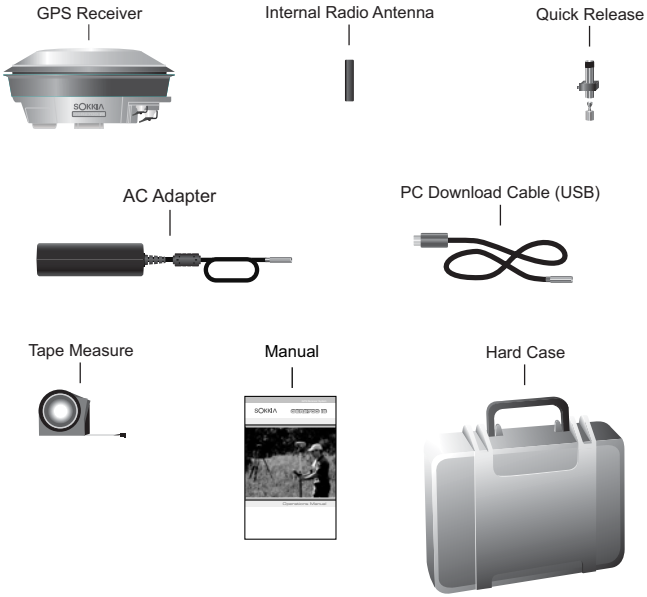

Figure 1: Standard System Components: RTK Rover

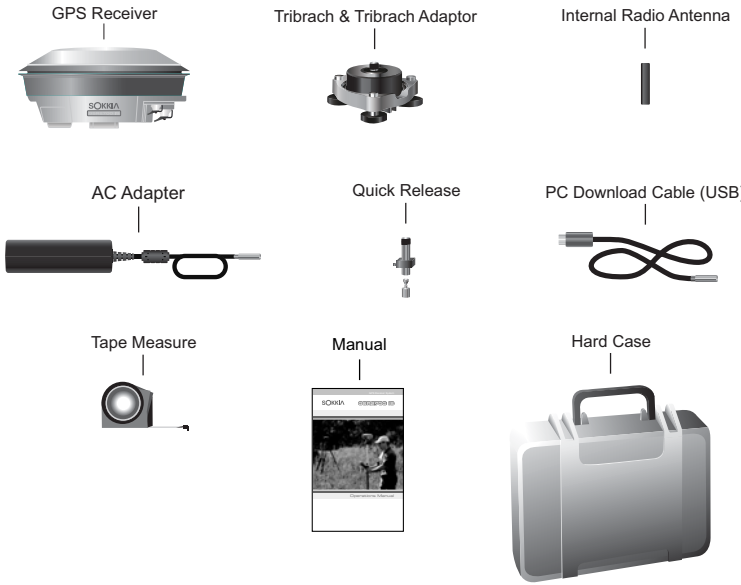

Figure 2: Standard System Components: RTK Base

Figure 3 illustrates optional components that you may also wish to use with your system.

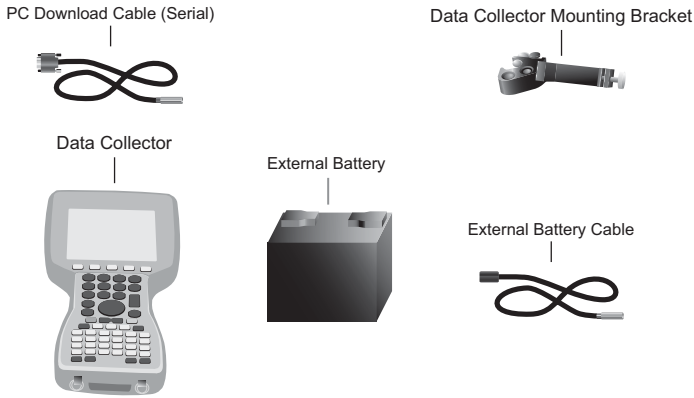

Figure 3: Optional Components

1.4 Usage Cautions

CAUTION

- If your receiver has an internal radio, always ensure that the radio antenna is properly connected to your receiver before turning the unit on. Never disconnect the radio antenna while the internal radio is still powered. Removal of the antenna while the unit is powered may cause **irreparable damage** to the internal circuitry of your radio, particularly when the radio is transmitting information.
- This device incorporates circuitry to absorb most static discharges. However, severe static shock may cause inaccurate operation of the unit. Use anti-static precautions where possible.
- This device is a precision instrument. Although it is designed for rugged operating conditions, it performs best when handled with care.
- When the port covers are closed, the enclosure is sealed to provide protection against adverse environmental conditions. To minimize the possibility of damage, always keep the ports covered except when in use.
- The GSR2700 IS can accept an input supply voltage in the range of +9 to +18 VDC. Do not operate the receiver outside the specified voltage range.
- Drawing more than the specified maximum current (1 amp combined total) from the two COM ports will cause an internal fuse to interrupt the current to prevent damage to the unit. If this happens, immediately reduce the load and allow the unit to automatically reset its protection circuitry.

1.5 Icons

The GSR2700 IS uses the display panel and port icons summarized in Table 2.

Table 2: Icon Summary

Icon	Meaning	Description & Task
Display Panel LEDs		
	Battery life	Identifies the gauge that displays the available internal and external battery power.
	Satellite tracking	Identifies the gauge that displays the number of satellites currently being tracked by the receiver.
	Memory	Identifies the gauge that displays the available storage space in the internal memory.
	Occupation timer	Identifies the gauge that displays the static occupation timer.
	Bluetooth communication status	Identifies the Bluetooth communication status indicators.
	Internal radio status	Identifies the internal radio status indicators.
COM1 COM2	COM status	Identifies the COM port status indicators.
Ports		
PWR	PWR	Identifies the power port on the underside of the GSR2700 IS.
1 2	COM1, COM2	Identifies the COM1 and COM2 ports on the underside of the GSR2700 IS.
	Radio antenna	Identifies the internal radio antenna connector on the underside of the GSR2700 IS.

1.6 Document Conventions

This manual uses notes and cautions to stress important information.

NOTE A note contains text that further explains information in the previous paragraph.

CAUTION

A caution provides information about possible sources of difficulty or situations that may cause damage to the product.

1.7 Finding More Information

This manual provides the information you need to use the GSR2700 IS. The following documents provide supporting documentation:

- **Planning Reference Manual.** Describes how to use *Planning* software to help determine satellite availability, as well as information about setting the POWERUP configuration for the GSR2700 IS.
- **Spectrum Survey Reference Manual.** Provides information about processing and adjusting your data using *Spectrum Survey.*
- **SDR+ User's Guide.** Describes how to use the *SDR+* data collection software.

1.8 Obtaining Technical Assistance

Technical support is available from the distributor where you purchased this product. When you contact technical support, please make sure you have the following information:

- Your receiver information, including: serial number, part number, model, firmware version, and internal radio information
- A concise description of the problem

For a list of SOKKIA worldwide offices, see the list at the back of this manual.

Chapter 2 GSR2700 IS Components

The GSR2700 IS enclosure is fully sealed, and houses your system's GPS receiver, GPS antenna, batteries, memory, internal radio (if installed), and wireless communication device. The integration of components into a single unit makes the use of a backpack unnecessary.

2.1 Enclosure Features

The top of the GSR2700 IS is comprised of the GPS antenna and radome, surrounded by a shock-absorbing protective bumper. On the side of the receiver is the display panel, which enables you turn on and monitor the system. Brightly colored LEDs display the status of your system. (See Figure 4.) For details about the display panel, see Section 2.9, *Display Panel*, page 18.

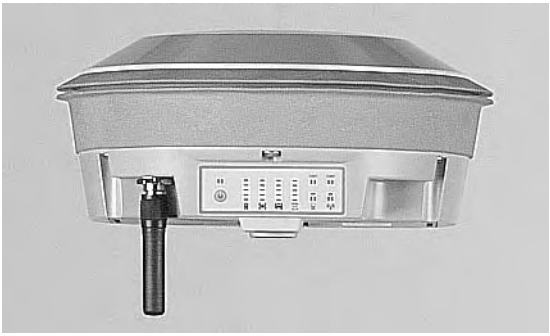

Figure 4: GPS Antenna and Display Panel

The ports are accessible from the underside of the unit. See Figure 5 for a view of the ports with covers. For details about the ports, see Section 2.2, *Ports*, page 12.

Figure 5: Ports

The underside of the GSR2700 IS enclosure has a standard 5/8″ survey mount, compatible with a standard quick release fitting, for mounting the unit on a tripod or survey pole. The mounting socket accepts a threaded stud up to 0.75″ (19 mm) in length.

Also on the underside of the enclosure is a phase center offset label. See Figure 6 for a view of the mounting socket and phase center offset label.

Figure 6: Mounting Socket and Phase Center Offset Label

The internal antenna for the Bluetooth wireless communication device is indicated on the underside of the enclosure by a square raised area (see Figure 7). For details about the wireless

communication device, see Section 2.8, *Wireless Communication*, page 17.

Figure 7: Wireless Communication Antenna

2.2 Ports

The GSR2700 IS features an external power input port, two communication ports, and an antenna connector port for the internal radio. All ports are located on the underside of the enclosure and are protected from dust and water by covers.

NOTE Leave the port covers closed unless a port is in use.

Each port is labeled with an icon and text for easy identification. See Figure 8 for an illustration of the ports and labels. See Table 3, *Port Summary*, page 13 for a description of each port.

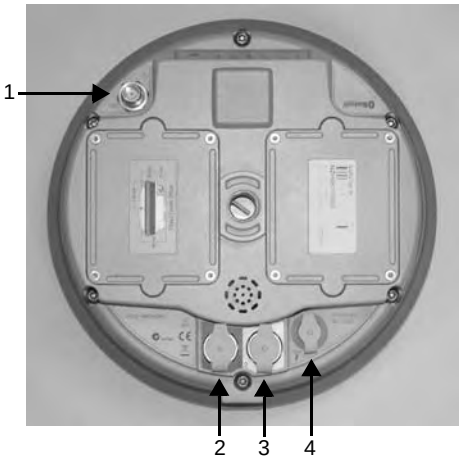

Figure 8: Ports and Labels

Table 3: Port Summary

Number	Description
1	Antenna port (internal radio)
2	COM1 port (handheld communication)
3	COM2 port (radio and USB communication)
4	Power port

2.2.1 Antenna port

The GSR2700 IS has an external TNC antenna connector for an internal UHF or GSM radio (if installed). See Figure 9 for a view of the receiver with radio antenna attached. For more information about the internal radio, see Section 2.7, *Internal Radio*, page 17.

Figure 9: Internal Radio Antenna

CAUTION
Attach only the Sokkia antenna (UHF or GSM, as applicable) to the antenna port. Do not attach other antennas.

2.2.2 Power port and power input

The GSR2700 IS has one power input port for connecting an external power source to the receiver, such as an external battery, as an alternative to using the internal batteries. See Section 2.4, *Batteries*, page 15 for more information about the internal batteries, and Section 5.2, *Power Source*, page 42 for more information about power input.

2.2.3 Communication ports

The two communication ports enable you to communicate with accessory devices, such as a data collector or radio. As well, each communication port provides a power output for powering accessory devices (for example, an external UHF radio).

Typically, the COM1 port is intended for use with a data collector. The COM2 port is typically intended for use with a radio. You can also connect your PC's USB port to the COM2 port for high-speed data transfer from internal memory.

The GSR2700 IS can provide power output through the COM1 and COM2 ports for powering accessories. The output voltage from the COM port is approximately the same as the input to the unit. For more information about powering peripheral devices, see Section 5.3, *Powering Peripheral Devices*, page 44.

2.3 Cables

Each GSR2700 IS cable connector is keyed to ensure that the cable can be inserted in only one way, to prevent damage to both the GSR2700 IS and the cables. In addition, the connectors that are used to secure the cables to the receiver have a latching mechanism that requires careful insertion and removal.

Cables are color coded according to the port they connect to (red for the power port, blue for the COM1 port, and white for the COM2 port). Both the cable and the corresponding port on the receiver indicate the appropriate color.

Observe the following when handling cables:

- Before inserting the cable, ensure you are using the appropriate cable for the port. Check the color coding on the cable and the port itself to ensure they match.
- Line up the red dot on the connector shell with the red index mark on the receiver's receptacle.
- Insert the connector until it seats with a click; it is now locked in place.
- To remove a cable, grasp the connector by the knurled ring and pull.

CAUTION
Do not pull directly on the cable.

2.4 Batteries

The GSR2700 IS incorporates two internal custom Li-Ion battery packs. The GSR2700 IS can also be powered using an external power source. See Section 5.2, *Power Source*, page 42 for more information about power input.

The internal batteries will power the unit continuously for about 10 hours as part of an RTK rover setup, using a UHF internal radio. When operating without a radio, the receiver can be operated for about 14 hours on the internal batteries.

The internal batteries are designed for optimal use for the first 300 discharge cycles. If, after using the receiver for some time, you notice degraded battery life, contact your local Sokkia distributor.

NOTE The internal batteries should be serviced by your local Sokkia distributor. Do not attempt to service the batteries yourself—doing so will void the product warranty.

2.5 Memory

The GSR2700 IS comes standard with 64 MB of internal memory to support post-processing applications. For information about how many hours of data can be stored in memory, see Section 6.5, *Data Storage Capacity*, page 54.

NOTE To determine the memory capacity of your receiver, use *Spectrum Survey* or *SDR+*. If the internal memory needs to be serviced or upgraded, see your local Sokkia distributor.

2.6 GPS Antenna

The GSR2700 IS features an integrated GPS antenna (L1/L2) with Pinwheel™ technology. This patented antenna provides exceptional multipath rejection and performance equivalent to a typical choke ring antenna.

Figure 10: GPS Antenna

There is one tape measure anchor point on the circumference of the receiver from which the antenna height can be measured. This height measurement location enables the use of a Sokkia tape measure (custom tape with offset scale and reference tip) or a typical hardware store tape measure.

A phase center offset label is located on the underside of the receiver (see Figure 6, *Mounting Socket and Phase Center Offset Label*, page 11 for details).

2.7 Internal Radio

Depending on your particular system configuration, the GSR2700 IS may include an internal UHF or GSM/GPRS radio for transmitting or receiving differential corrections for RTK applications.

The radio antenna connects on the underside of the receiver; see Section 2.2.1, *Antenna port*, page 13 for details.

NOTE If your receiver has an internal GSM radio, contact your local Sokkia distributor to install the SIM card supplied by your telecommunications service provider.

CAUTION

Always ensure that the radio antenna is properly connected to your receiver before turning the unit on. Never disconnect the radio antenna while the internal radio is still powered. Removal of the antenna while the unit is powered may cause irreparable damage to the internal circuitry of your radio, particularly when the radio is transmitting information.

See *Radio Link*, page 58 for details about the UHF and GSM/GPRS internal radios.

2.8 Wireless Communication

The GSR2700 IS features a built-in Class 2 Bluetooth wireless communication device, which enables a wireless connection from a Bluetooth-enabled data collector or a PC.

2.9 Display Panel

The GSR2700 IS has an easy-to-use display panel with single-button operation and LED display indicators that give you a view of your system status. See Chapter 3, **Display Panel Operations**, page 19 for details about display panel features and how to use them.

2.10 Audible Annunciator

The GSR2700 IS features an audible annunciator, which issues a series of voice messages or sounds to alert you of the receiver's current status during operation. For details about the audible annunciator, see Section 3.4, *Audible Annunciator*, page 31.

Chapter 3 Display Panel Operations

The GSR2700 IS LED display panel provides receiver health information, including battery life, memory available, satellites tracked, and port and radio activity. In addition to the visual display, a series of voice messages or sounds alert you to receiver status and event conditions.

Figure 11 illustrates the display panel components, and Table 4 describes each component.

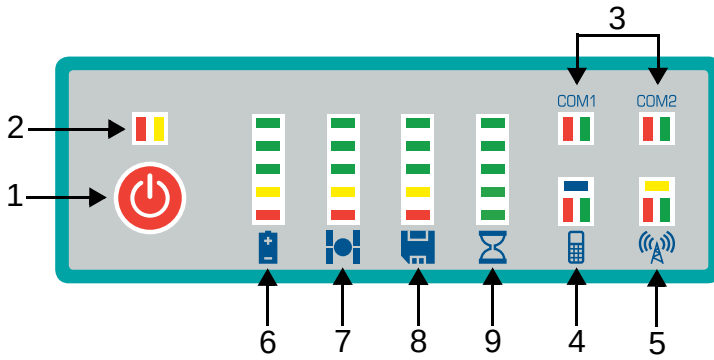

Figure 11: Display Panel Components

Table 4: Display Panel Components

Component	Description	Reference
1	Power button	Section 3.1, *Power Button*, page 20
2	Receiver health indicator	Section 3.2.1, *Receiver health*, page 23
3	COM port communication status indicators	Section 3.2.2, *COM port communication status*, page 24
4	Wireless communication status indicator	Section 3.2.3, *Wireless communication status*, page 25

Table 4: Display Panel Components (continued)

Component	Description	Reference
5	Internal radio status indicator	Section 3.2.4, *Internal radio status*, page 26
6	Battery life gauge	Section 3.3.1, *Battery life gauge*, page 27
7	Satellite tracking gauge	Section 3.3.2, *Satellite tracking gauge*, page 28
8	Memory gauge	Section 3.3.3, *Memory gauge*, page 29
9	Occupation timer gauge	Section 3.3.4, *Occupation timer gauge*, page 30

3.1 Power Button

The power button is used to turn the unit on or off, format the internal memory, or perform a factory reset.

The power button provides single-button operation for the receiver. The number of seconds that the power button is held determines how the receiver will behave. At each time interval, the receiver issues voice messages or sounds to guide you through the process. See Section 3.4, *Audible Annunciator*, page 31 for more information about voice messages and sounds.

NOTE Ensure that you hold the power button firmly for the entire duration that is required to perform the desired action.

The power button functions are illustrated in Figure 12 and summarized in Table 5.

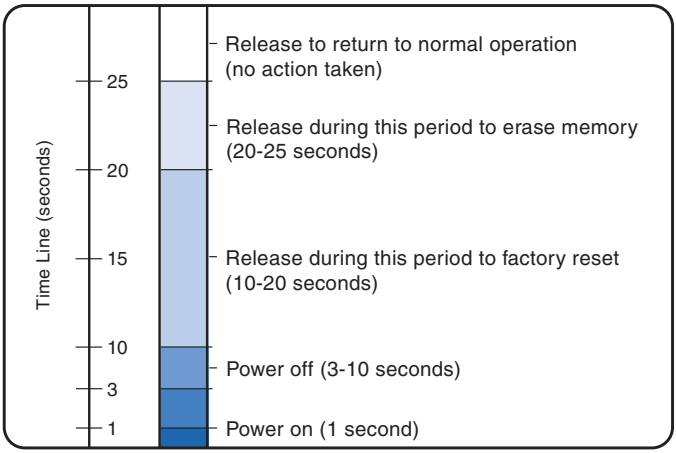

Figure 12: Power Button Functions

Table 5: Power Button Functions

Action	Number of Seconds	Description
Turn on	1	Hold the button for **1 second** and release to turn the receiver on. The battery life gauge indicates the progress of the startup sequence. After startup (approximately 20 seconds), the battery life gauge indicators will turn off for a short period of time, and the “Receiver Ready” message or sound will be issued to indicate that the system is operational. *Note:* The receiver health indicator LEDs might illuminate during startup—this is normal.
Turn off	3	Hold the button for **3 seconds** until the “Power Off” message or sound is issued and the top three battery life gauge indicators illuminate. Release the button to turn off the receiver.

Table 5: Power Button Functions (continued)

Action	Number of Seconds	Description
Factory reset	10	With the receiver turned on, hold the button for **10 seconds** until the “Factory Reset” message or sound is issued and the top three LEDs on the battery life, satellite tracking, and memory gauges illuminate. Release the button to reset all stored parameters on the receiver to their default values. *Note:* This action is not reversible.
Erase memory	20	With the receiver turned on, hold the button for **20 seconds** until the “Delete Files” message or sound is issued and the top three LEDs on the memory gauge illuminate. Release the button to delete all the files from the memory. *Note:* This action is not reversible. If you are unsure about whether you want to delete all the files, hold the button longer than 25 seconds so that the receiver simply returns to normal operations. To delete individual files from the memory, use Sokkia software on your PC.
Disregard	25	If you hold the button longer than **25 seconds** until the “Continue Operation” message or sound is issued, no action will be taken, and the receiver will return to normal operations. The receiver will not turn off, the data files will not be erased, and the settings will not revert to factory settings.

3.2 Status Indicators

The GSR2700 IS display panel features status indicators to provide information about the following:

- Receiver health (Section 3.2.1, *Receiver health*, page 23)
- COM port communication status (Section 3.2.2, *COM port communication status*, page 24)

- Wireless communication status (Section 3.2.3, *Wireless communication status*, page 25)
- Internal radio status (Section 3.2.4, *Internal radio status*, page 26)

3.2.1 Receiver health

The receiver health indicator displays the current status of the receiver.

Under normal operation, neither LED is illuminated. When there is a warning or error condition, the LEDs illuminate in a sequence of six flashes. If the first flash in the sequence is yellow, it is a warning condition; if red, it is an error condition. The particular combination of red and yellow flashes indicates a specific warning or error condition (for example, the receiver is being operated outside its temperature range).

If an error condition persists, take the following steps:

1. Turn the receiver off for a few minutes.
2. Perform a factory reset (see Table 5, *Power Button Functions*, page 21).
3. If the error condition still persists, check to see if the receiver is too hot. If it is, let it cool down and perform another factory reset.
4. If the error condition is not resolved, contact your local Sokkia distributor.

NOTE Make note of the sequence of flashes and provide this information to your Sokkia distributor, to assist in identifying the problem.

3.2.2 COM port communication status

The COM port communication status indicators display the status of communication traffic flow across the receiver's COM1 and COM2 ports.

The LEDs blink to indicate signal sent/received on the respective port. See Table 6 for a description of the COM port communication status LEDs.

Table 6: COM Port Communication Status LEDs

LED	State	Status Description
Red	Illuminated	Data is being received by the GSR2700 IS via the COM port.
	Dark	No data is being received via the COM port.
Green	Illuminated	Data is being transmitted from the GSR2700 IS via the COM port.
	Dark	No data is being transmitted via the COM port.

If data is simultaneously being transmitted and received, both transmit and receive LED indicators will be illuminated.

NOTE During typical RTK operation, when a data collector is connected to COM1, both red and green LEDs illuminate frequently. When an external UHF radio is connected to COM2, the red LED illuminates when operating the receiver as a rover, and the green LED illuminates when operating it as a base.

For details about the COM ports, See Section 2.2.3, *Communication ports*, page 14.

3.2.3 Wireless communication status

The wireless communication status indicators indicate the status of the Bluetooth connection and activity on the internal Bluetooth port.

NOTE The internal Bluetooth device powers off if there is no connection made within 30 minutes.

See Table 7 for a description of the wireless communication status LEDs.

Table 7: Wireless Communication Status LEDs

LED	State	Status Description
Blue	Blinking	A connection with another device has not yet been established.
	Solid	A Bluetooth connection has been established with another device (for example, a data collector).
	Dark	The internal Bluetooth device is powered off.
Red	Blinking	Data is being received by the GSR2700 IS via the Bluetooth port.
	Dark	No data is being received via the Bluetooth port.
Green	Blinking	Data is being transmitted via the GSR2700 IS Bluetooth port.
	Dark	No data is being transmitted via the Bluetooth port.

If data is simultaneously being transmitted and received, both transmit and receive LED indicators are illuminated.

NOTE During typical RTK operation, when a data collector is connected to the internal Bluetooth port, both red and green LEDs illuminate frequently.

For details about the wireless communication device, see Section 2.8, *Wireless Communication*, page 17.

3.2.4 Internal radio status

If your receiver has an internal radio module, the internal radio status indicators display the power and activity status of the internal UHF or GSM radio.

NOTE The internal radio powers off if there is no communication within 30 minutes.

See Table 8 for a description of the internal radio communication status LEDs.

Table 8: Internal Radio Status LEDs

LED	State	Status Description
Yellow	Illuminated	Power is being provided to the internal radio device.
	Dark	The internal radio is powered off.
Red	Blinking	Data is being received by the GSR2700 IS via the internal radio device.
	Dark	No data is being received via the internal radio device.
Green	Blinking	Data is being transmitted from the GSR2700 IS via the internal radio device.
	Dark	No data is being transmitted via the internal radio device.

If data is simultaneously being transmitted and received, both transmit and receive LED indicators are illuminated.

NOTE When the internal radio is being used, the red LED illuminates when operating the receiver as a rover, and the green LED illuminates when operating it as a base.

For details about the internal radio, see Section 2.7, *Internal Radio*, page 17.

3.3 Gauges

The GSR2700 IS display panel features four gauges to provide information about the following:

- Battery life and charging status (Section 3.3.1, *Battery life gauge*, page 27)
- Satellites currently being tracked (Section 3.3.2, *Satellite tracking gauge*, page 28)
- Memory available (Section 3.3.3, *Memory gauge*, page 29)
- Occupation time (period of continuous data of sufficient quality for post-processing) (Section 3.3.4, *Occupation timer gauge*, page 30)

Each gauge contains a series of five LEDs that illuminate to alert you of the system's status.

NOTE During typical operation, only one LED is illuminated on each gauge at any one time.

3.3.1 Battery life gauge

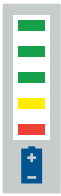

The battery life gauge displays the battery life remaining on the internal batteries. When an external power source is connected, the detected available voltage is indicated by a blinking LED. When the receiver is powered off and is connected to the AC Adapter, the charging status is indicated.

The internal battery life is calculated to an accuracy of ±10%. The external battery life is calculated to an accuracy of ±0.1 volts.

Table 9 summarizes the values indicated by each LED for internal and external batteries, and charging status.

Table 9: Battery Life Gauge Indicators

LED	Internal Battery Time Remaining (hours)	External Battery Power Available (VDC)	Charging Status[a]
Top	at least 9	11.3 to 18.0	*Blinking*: receiver charging *Solid*: charging complete
4	6 to 9	10.9 to 11.3	not applicable
3	3 to 6	10.6 to 10.9	not applicable
2	1 to 3	10.1 to 10.6	not applicable
1	0 to 1	<10.1	not applicable

a. When receiver is powered off and connected to the AC Adapter.

When the internal batteries have full charge, the top LED (green) is illuminated. The bottom LED (red) is illuminated when you have less than one hour of battery power remaining.

When the receiver is off and the batteries are charging, the top LED blinks; the LED stops blinking when charging is complete.

3.3.2 Satellite tracking gauge

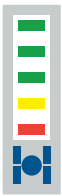

The satellite tracking gauge displays the number of satellites currently being tracked by the receiver. If the current position of the receiver is being held fixed, consistent with RTK base operation, the currently illuminated LED will blink.

For a satellite to be counted as used, it must have a healthy signal and be above the elevation mask, and the receiver must have achieved lock (both code and carrier).

Table 10 summarizes the values indicated by each LED.

Table 10: Satellite Tracking Gauge Indicators

LED	Number of Satellites Being Tracked
Top	10, 11, or 12
4	8 or 9
3	6 or 7
2	4 or 5
1	1, 2, or 3

For the most accurate survey results, perform surveys with a minimum of six satellites if possible. The bottom LED (red) is illuminated if the receiver is using only one, two, or three satellites, which are insufficient for three-dimensional positioning applications.

3.3.3 Memory gauge

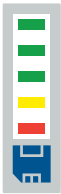

The memory gauge displays the amount of available memory. When data is being logged to a file, the currently illuminated LED blinks.

Table 11 summarizes the values indicated by each LED.

Table 11: Memory Gauge Indicators

LED	Available Memory (%)
Top	80 to 100
4	60 to 80
3	40 to 60

Table 11: Memory Gauge Indicators (continued)

LED	Available Memory (%)
2	20 to 40
1	0 to 20

When the memory has over 80% space available, the top LED (green) is illuminated. The bottom LED (red) is illuminated if the memory is almost full. When the red LED is illuminated, consider deleting files to free up space.

3.3.4 Occupation timer gauge

The occupation timer gauge indicates that sufficient quality and quantity of data has been collected for successful static data post-processing for the indicated length of baseline.

If an LED is illuminated, it indicates that you have now collected sufficient raw GPS data to successfully post-process a baseline of the indicated baseline length. When insufficient data has been collected to theoretically process a baseline of 5 kilometers, none of the LED indicators will be illuminated.

NOTE For successful post-processing, it is assumed that there are no adverse environmental conditions and you have a data logging interval of 10 seconds.

Table 12 summarizes the values indicated by each LED.

Table 12: Occupation Timer Gauge Indicators

LED	Baseline Length (km)
Top	up to 30
4	up to 20

Table 12: Occupation Timer Gauge Indicators (continued)

LED	Baseline Length (km)
3	up to 15
2	up to 10
1	up to 5

NOTE Table 12 provides estimates only. Performance of the indicator depends on excellent quality GPS data being observed at other receivers (no obstructions, same satellites, low multipath, etc.). If you are uncertain about the quality of the data collected, log data for a longer period of time.

3.4 Audible Annunciator

The GSR2700 IS is equipped with an audible annunciator, which issues a series of voice messages or sounds to alert you to the system status and event conditions.

NOTE Your receiver is preconfigured with either voice messages or sounds, at a preset volume. If you wish to make any changes to the voice messages or sounds, or the volume levels, contact your local Sokkia distributor. (You can also choose to have no messages or sounds.)

The frequency of the voice message or sound depends on the specific condition. The frequency is either once (when the condition first occurs) or continuous (repeats every 30 seconds for as long as the condition persists).

The annunciator indicates the conditions summarized in Table 13.

Table 13: Audible Annunciator Conditions

Status/Event Condition	Description	Frequency
Receiver Ready	The receiver has completed its startup sequence, and is ON and ready for operation. Initiated whenever you initially press the power button to power on the receiver.	once
Power Off	The power button has been held down long enough to power off the receiver.	once
Receiver Shutting Down	The receiver is turning off, initiated by pressing the power button for the appropriate length of time. This can also occur when the batteries are sufficiently discharged.	once
Factory Reset	The power button has been held down long enough to initiate a factory reset of the receiver.	once
Delete Files	The power button has been held down long enough to initiate erasing of all of the files in memory.	once
Continue Operation	The power button has been held down too long for any action to take place. Release the power button to resume normal receiver operations.	once
Battery Low	The remaining battery life (internal or external batteries) is less than 15 minutes. *Note:* This is only an estimate. To ensure continued operation without interruption, immediately connect a valid external power source.	continuous
Memory Low	The remaining memory is less than 15 minutes under the current logging conditions. When the memory is full, data will no longer be stored.	continuous

Table 13: Audible Annunciator Conditions (continued)

Status/Event Condition	Description	Frequency
Memory Full	A file is open for data logging on the receiver, but the memory is full and new data can no longer be stored.	continuous
RTK Fixed	A fixed-integer RTK solution has been achieved.	once
Fix Lost	A fixed-integer RTK solution has been lost.	once

Chapter 4 System Setup

Setting up the GSR2700 IS is a straightforward process, whether you are in the field (collecting data), or back at the office (configuring the receiver or transferring collected data to your PC for post-processing).

This chapter summarizes system setup for both the office and field operations.

CAUTION
See Section 1.7, *Finding More Information*, page 8 for a list of items you should be aware of as you set up and use the GSR2700 IS.

4.1 Setting Up at the Office

An office setup can be used to configure the GSR2700 IS or to transfer collected data from the receiver to a PC.

The GSR2700 IS supports transfer of data from the receiver's memory to a PC in the following ways:

- Via a USB connection to the receiver's COM2 port
- Using a Bluetooth connection
- Using a serial connection to the receiver's COM1 port

To set up the GSR2700 IS in the office, complete the following steps:

1. Place the GSR2700 IS on a desk or other suitable work surface.
2. Use the USB PC Download cable to connect the PC to the receiver's COM2 (white) port (see Chapter 2, **GSR2700 IS Components**, page 10).

   or

Use a serial PC Data cable to connect the PC to the receiver's COM1 (blue) port (see Chapter 2, **GSR2700 IS Components**, page 10).

NOTE Or, if you are using a Bluetooth connection, proceed to step 3.

3. Turn on the GSR2700 IS (see Chapter 5, **Basic Operations**, page 42).
4. If using a Bluetooth connection, connect from the PC to the receiver.
5. Communicate with the GSR2700 IS using the *Planning* software (refer to your *Planning Reference Manual*) to set up the POWERUP configuration, or any Sokkia software (for example, *Spectrum Survey*) to transfer data to the PC.

4.2 Setting Up for Field Operations

The GSR2700 IS can be used for static or kinematic surveys, as well as for real-time kinematic (RTK) surveys as a base or rover. This section provides an overview of the equipment and setup for typical uses of the system.

4.2.1 Typical RTK rover setup

A typical rover RTK setup consists of a range pole, GSR2700 IS receiver with internal GSM or UHF radio, and data controller. If you use a Bluetooth connection to communicate between the data controller and the receiver, you do not require any cables at all.

Typical rover setups include using one of the following to receive corrections:

- Internal UHF radio
- Internal GSM/GPRS radio used in one-to-one mode (for example, one GSR2700 IS receiver to another)
- Internal GSM/GPRS radio used via the Internet (for example, to a GSR2700 RS, or NTRIP base station)

See Figure 13 for an illustration of a typical rover setup.

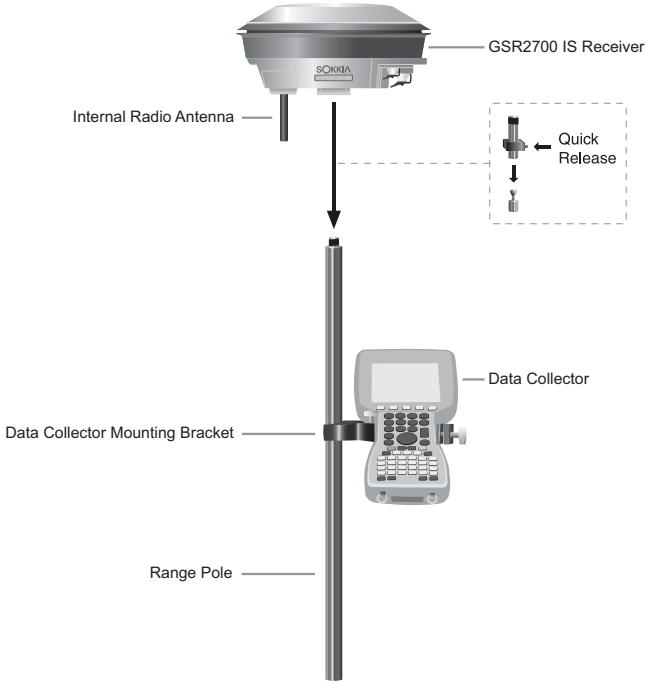

Figure 13: Typical RTK Rover Setup

For RTK rover setup, complete the following steps:

1. Mount the GSR2700 IS on the pole.

NOTE Position the receiver with the GPS antenna up and the mounting socket down.

2. If you are using the internal radio, ensure that the internal radio antenna is connected to the receiver's antenna port

3. Ensure that the internal radio antenna is connected to the receiver's antenna port (see Section 2.7, *Internal Radio*, page 17).

CAUTION

Always ensure that the radio antenna is properly connected to your receiver before turning the unit on. Never disconnect the radio antenna while the internal radio is still powered. Removal of the antenna while the unit is powered may cause irreparable damage to the internal circuitry of your radio, particularly when the radio is transmitting information.

4. Turn on the receiver (see Chapter 5, **Basic Operations**, page 42).

5. Use a Bluetooth connection, or serial communication via the receiver's COM1 (blue) port, to connect a data collector to the receiver (see Chapter 2, **GSR2700 IS Components**, page 10).

4.2.2 Typical RTK base setup

A typical RTK base station setup consists of a tripod and the GSR2700 IS receiver with internal UHF or GSM/GPRS radio. The setup might also include a data collector for in-field configuration of the receiver.

Typical base setups include using one of the following to transmit corrections:

- Internal UHF radio
- Internal GSM/GPRS radio used in one-to-one mode (for example, one GSR2700 IS receiver to another)
- External radio device (for example, a cell phone or high-power radio)

See Figure 14 and Figure 15 for illustrations of two typical base setups.

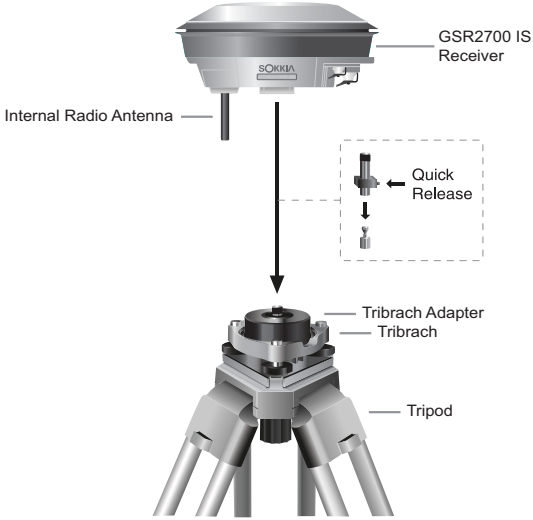

Figure 14: Typical RTK Base Setup (internal radio)

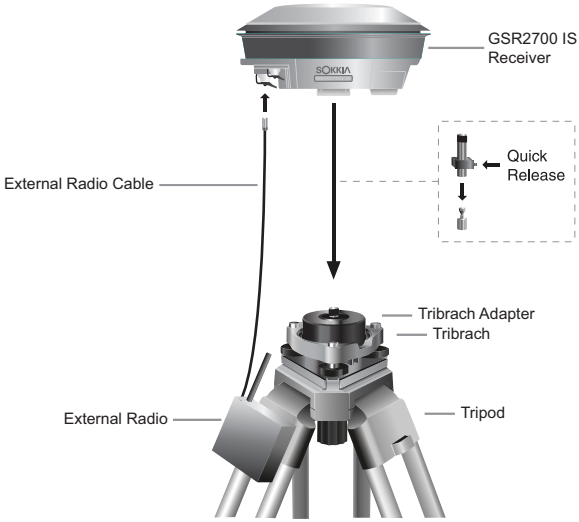

Figure 15: Typical RTK Base Setup (external radio)

For RTK base setup, complete the following steps:

1. Mount the GSR2700 IS on the tripod.

NOTE Position the receiver with the GPS antenna up and the mounting socket down.

2. If you don't plan to use a data collector in the field, ensure you have the appropriate POWERUP configuration loaded onto the receiver (see Chapter 6, **Collecting Data**, page 48).

3. If you are using the internal radio, ensure that the internal radio antenna is connected to the receiver's antenna port (see Section 2.7, *Internal Radio*, page 17).

CAUTION

Always ensure that the radio antenna is properly connected to your receiver before turning the unit on. Never disconnect the radio antenna while the internal radio is still powered. Removal of the antenna while the unit is powered may cause irreparable damage to the internal circuitry of your radio, particularly when the radio is transmitting information.

4. If you are using an external radio device:
   - Ensure the antenna is connected to the radio device.
   - Connect power to the radio device.
   - Use a radio communications cable to connect the device to the receiver's COM2 (white) port (see Chapter 2, **GSR2700 IS Components**, page 10).

5. Turn on the receiver (see Chapter 5, **Basic Operations**, page 42).

6. *(Optional)* Use a Bluetooth connection, or serial communication via the receiver's COM1 (blue) port, to connect a data collector to the receiver (see Chapter 2, **GSR2700 IS Components**, page 10).

7. Check the satellite tracking gauge to verify that the position is fixed (see Section 3.3.2, *Satellite tracking gauge*, page 28 for more information).

8. Check the internal radio status indicator (see Section 3.2.4, *Internal radio status*, page 26) or COM2 status indicator Section 3.2.2, *COM port communication status*, page 24), as appropriate, to verify that corrections are being transmitted (green LED).

NOTE If you are using *SDR+* software and have a valid RTK-capable POWERUP configuration loaded on your receiver, you do not need to connect GSR2700 IS to a data collector to use the receiver as a base. See the *SDR+ User's Guide* for more information.

4.2.3 Typical static setup

For static surveys, the GSR2700 IS is mounted on a tripod. The system is operated using the power button, and is powered using the internal batteries or an external battery. The setup might also include a data collector for in-field configuration of the receiver.

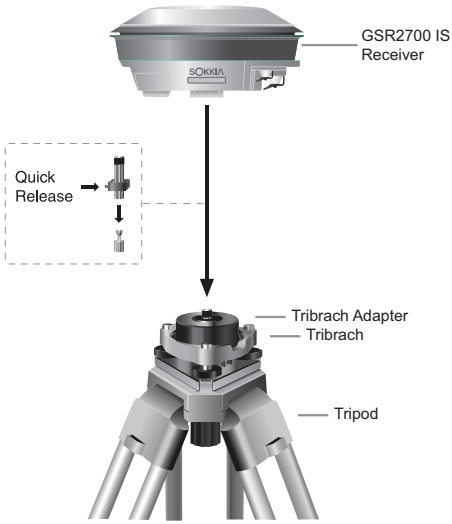

Figure 16: Typical Static Setup

For a static survey, complete the following steps:

1. Ensure you have the appropriate POWERUP configuration loaded onto the receiver (see Chapter 6, **Collecting Data**, page 48).
2. Mount the GSR2700 IS on the tripod.

NOTE Position the receiver with the GPS antenna up and the mounting socket down.

3. Turn on the receiver (see Chapter 5, **Basic Operations**, page 42).
4. Check the memory gauge to verify that the receiver is logging data (see Section 3.3.3, *Memory gauge*, page 29 for more information).
5. *(Optional)* If you wish to see the current position and satellite tracking status, you can connect a data collector to the receiver using a Bluetooth connection, or serial communication via the receiver's COM1 (blue) port.

Chapter 5 Basic Operations

This chapter describes how to power your GSR2700 IS and describes basic receiver operations.

NOTE Before using the GSR2700 IS for the first time, ensure that you have followed the setup instructions in Chapter 4, **System Setup**, page 34.

5.1 Turning the System On and Off

The GSR2700 IS has a power button that, when pushed, turns the receiver on or off. For more information about the power button, see Section 3.1, *Power Button*, page 20.

NOTE If you press the power button to turn off the GSR27000 IS while it is logging data to the memory, it will save and close any open files before turning off.

For information about power consumption while the receiver is off, see Section 5.4, *Power Consumption*, page 44.

NOTE The GSR2700 IS does not turn on in response to COM port activity.

5.2 Power Source

You may decide to power the GSR2700 IS using its internal batteries, or you can choose to attach an external power source to the system.

5.2.1 Internal batteries

The GSR2700 IS incorporates two internal battery packs. If the internal batteries are completely discharged, the GSR2700 IS can operate if an external power input is connected.

For information about charging the internal batteries, see Section 5.6, *Charging the Internal Batteries*, page 46.

5.2.2 External power source

In addition to using the internal batteries, the GSR2700 IS can be powered using an external battery according to the recommendations in this section.

NOTE If you want to charge your receiver while driving a vehicle, use a DC to AC inverter that meets the input specifications as detailed in Appendix A, **Technical Specifications**, page 55.

For the receiver to operate with an external power source, the minimum operating voltage for the external power input cannot be less than the minimum GSR2700 IS operating voltage. See Appendix A, **Technical Specifications**, page 55 for detailed information about the GSR2700 IS operating voltage.

CAUTION

If the external power input exceeds 18 VDC, it may damage the receiver.

When an external power source is present, the GSR2700 IS uses it before drawing on the internal batteries, provided that the power from the external source is greater than that of the internal batteries.

If the voltage delivered from the external power source is less than the internal battery power, the internal batteries will be used until they are drawn to the same level as the external source. Once the internal and external batteries are discharged to the same level, the receiver will draw equally from both sources.

When the receiver is on and connected to an external power source that provides 14–18 VDC (including the AC Adapter), the internal batteries will be charged while the receiver is operating.

5.3 Powering Peripheral Devices

The GSR2700 IS is capable of providing power to peripheral devices, through its COM ports. The power output is approximately the same as the input of the active battery.

NOTE Typically, the COM ports are not sent power. For example, since most data collectors do not have a power pin, COM1 would not usually provide power.

If the peripheral devices attached to the GSR2700 IS try to draw too much power from the battery output, the receiver will limit the available current to prevent damage to the receiver. Once the excessive load is removed, normal operation of the system will resume.

NOTE If a peripheral device (for example, a high-powered radio) was the cause of the current drain, it will probably not function after the system resumes normal operation.

If you use the Sokkia recommended data collector and radio, you will not overload your system. This possibility only exists if you attach peripherals that have not been approved for use with the GSR2700 IS.

5.4 Power Consumption

The GSR2700 IS has been designed to minimize its power usage. Power consumption is less than 5 W using the internal radio.

When the receiver is off, it still draws a small amount of power from the batteries. If you store your GSR2700 IS for several months without use, the batteries may become fully discharged. If this happens, recharge the batteries to resume operation (see Section 5.6, *Charging the Internal Batteries*, page 46).

5.5 Insufficient Power

If both the internal batteries or the external power input voltage are below minimum operating parameters (in other words, if the GSR2700 IS experiences drained batteries or power failure), the receiver will turn off and become inactive. If this happens, you will not be able to turn the receiver back on until sufficient power is restored.

In the event of a power failure, the GSR2700 IS power output is disabled on both COM ports and the receiver will not resume operations even if the power button is pressed.

To return to normal operation, charge the internal batteries or connect a valid external power input to the receiver. When sufficient power is restored, the COM ports will provide power according to what the POWERUP configuration specifies and the system will turn on if the power button is pressed. If there is no POWERUP configuration, the COM ports will provide power as they did before the power failure.

CAUTION

The GSR2700 IS may also become inactive if the external power input is greater than the power specified. See Section 1.7, *Finding More Information*, page 8 for more information.

NOTE The GSR2700 IS limits data loss from storage in the internal memory to a maximum of 10 seconds in the case of power supply failure.

5.6 Charging the Internal Batteries

When the batteries require charging, simply turn off the receiver and connect the supplied AC Adapter.

NOTE Ensure the receiver is turned off when charging. Though it is possible to charge the unit while operating, this is not recommended.

CAUTION

The AC Adapter is designed specifically for charging the GSR2700 IS. Do not use any other charger with the GSR2700 IS.
Do not use the AC Adapter outdoors for field operations with the GSR2700 IS.

While the receiver is charging, the top LED on the battery life gauge blinks (see Section 3.3.1, *Battery life gauge*, page 27). The LED stops blinking when charging is complete.

NOTE The internal batteries should be serviced by your local Sokkia distributor. Do not attempt to service the batteries yourself—doing so will void the product warranty.

5.7 Operation Overview

The following is a list of general operations when using the GSR2700 IS receiver:

1. Apply power to the GSR2700 IS (that is, ensure its internal batteries are charged or connect it to an external power supply). Once the GSR2700 IS is connected to an appropriate power supply, it is ready to use.

2. Turn the system on by pressing the power button. The GSR2700 IS will acquire GPS satellites and then may automatically start collecting data based on commands in the

POWERUP configuration (see Section 6.3.1, *About the POWERUP configuration*, page 49).

3. Connect a data collector to the receiver if you plan to use it to configure the receiver or control the survey. A data collector is not always necessary (for example, you are using the receiver as an RTK base or in a static survey).

Chapter 6 Collecting Data

The GSR2700 IS enables you to collect data in several ways and, by using the POWERUP configuration, to define the type of information stored during data collection.

6.1 How Data is Stored

The most basic activity you will perform using your GSR2700 IS is collecting raw data, which are recorded in the form of logs. Each collection session (one uninterrupted period of time) is stored in a single, unique data file in memory. Only one file is open and recorded to at a time. This file can subsequently be transferred to a PC for post-processing and adjustment using Sokkia's *Spectrum Survey Suite* software.

For information about how data files are named, see Section 6.4, *Data File Naming*, page 53.

6.2 Data Collection Methods

The GSR2700 IS collects data with a handheld data controller, or by logging to the internal memory.

6.2.1 Handheld data collection

You can use the GSR2700 IS receiver with a handheld data controller loaded with the *SDR+* software to configure and initiate data collection.

NOTE SDR+ is capable of storing only RTK data on the data collector. Raw GPS data are always stored in the receiver's internal memory.

When you connect the data controller to the receiver (whether using a wireless connection or a cable), a communication link is established and the controller controls the behavior of the receiver. When you turn on the GSR2700 IS, the preset

POWERUP configuration will run until the controller takes control of the receiver.

Commands issued to the receiver through the controller will supersede the POWERUP configuration resident on the receiver (see Section 6.3.1, *About the POWERUP configuration*, page 49). The receiver begins using the POWERUP configuration again when you turn the receiver off and back on again.

Use the options in the *SDR+* software to determine whether data is stored on the receiver or on the controller.

6.2.2 Logging to the internal memory

Turn the receiver on by pressing the power button (see Section 3.1, *Power Button*, page 20). Once the GSR2700 IS has acquired GPS satellites, it will automatically start collecting data based on the POWERUP definitions (see Section 6.3.1, *About the POWERUP configuration*, page 49).

NOTE For information about downloading data from internal memory, see Section 4.1, *Setting Up at the Office*, page 34.

6.3 Defining Data to be Collected

You can define what type of information should be collected during a data collection session by using tools available in the Sokkia *Planning* software to transfer a POWERUP configuration to the receiver.

NOTE The GSR2700 IS does not support the use of schedules.

6.3.1 About the POWERUP configuration

A receiver's POWERUP configuration is a group or set of data that tells the receiver what type of information should be stored during a data collection session.

The POWERUP configuration tells the receiver:

- What type of data to collect (for example, observations, ephemeris, almanac).
- Where the data should be stored (for example, in internal memory, or transmitted through COM1 or COM2).
- The interval at which data should be collected (for example, every 10 seconds).
- The position (none, fixed, or averaged).
- The antenna height.
- The elevation mask.
- The site name and number.
- The COM port baud rates.
- The wireless communication power settings.

6.3.2 Default POWERUP configuration

The GSR2700 IS initially operates on a default POWERUP configuration, which is always present on the receiver unless you remove it using the *Planning* software.

There are several default POWERUP configurations available for the GSR2700 IS. Your receiver is preset with one of five possible POWERUP configurations. Table 14, *POWERUP Configurations*, page 51 summarizes the factory setup for each.

NOTE To view the POWERUP configuration settings for your receiver, use the *Planning* software. If you would like the factory default POWERUP configuration setting changed to another of the five choices, see your local Sokkia distributor.

Table 14: POWERUP Configurations

	Static 15	RTCM Base Std 10	RTCA Base Std 10	RTCA Base Rapid 10	RTCA Base Std 15
Raw Observations					
Log to file	Yes	Yes	Yes	Yes	Yes
Recording interval (seconds)	15	10	10	10	15
Minimum satellites to store an epoch	3	3	3	3	3
Elevation mask (degrees)	5	5	5	5	5
RTK Base Operation					
Generate RTK corrections	No	Yes	Yes	Yes	Yes
Average position and fix time (secs)	n/a	180	180	60	180
Differential correction format	n/a	RTCM 18/19	RTCA	RTCA	RTCA
Default base ID	n/a	0	AAAA	AAAA	AAAA
Correction transmit interval (secs)	n/a	1	1	1	1
Base position transmit interval (secs)	n/a	10	10	10	10
Corrections to internal radio if present	n/a	Yes	Yes	Yes	Yes
Corrections to external COM2	n/a	Yes	Yes	Yes	Yes
Peripheral Power					

Table 14: POWERUP Configurations (continued)

	Static 15	RTCM Base Std 10	RTCA Base Std 10	RTCA Base Rapid 10	RTCA Base Std 15
Send power to data collector COM1	No	No	No	No	No
Send power to external radio COM2	No	Yes	Yes	Yes	Yes

6.3.3 Transferring a POWERUP configuration

The *Planning* software provides several predefined POWERUP configurations based on different data collection methods. You can select one of the predefined POWERUP configurations and transfer it to the receiver. You can also define your own POWERUP configuration or edit one of the predefined POWERUP configurations. See the *Planning Reference Manual* for more information.

NOTE When you transfer a POWERUP configuration to the GSR2700 IS using *Planning*, it replaces the existing configuration on the receiver. Only one POWERUP configuration can reside on the receiver at one time.

When you reset the receiver back to factory defaults, any POWERUP configuration you have transferred to the receiver is discarded, and the POWERUP configuration reverts to the factory default settings (see Section 6.6, *Resetting the Receiver*, page 54).

6.4 Data File Naming

Auto-generated file names consist of an eight-character base followed by a .PDC extension, as follows:

####$$$%.PDC

The eight characters are derived as shown in Table 15.

Table 15: Auto-Generated File Name Convention

Part of Name	Description
####	Last 4 digits of the GSR2700 IS receiver's serial number
$$$	UTC day of the year (001–366)
%	Session ID assigned in sequence (0..9, A..Z) based on the presence of files previously logged on a particular day.

For example, a GSR2700 IS might have a serial number such as `NZH05410087`. If the day is January 25 (025 UTC day of the year), and this is the 15th session created that day (session ID E), the file name would be `0087025E.PDC`.

In the unlikely event of a conflict between an auto-generated file name and an existing file, the GSR2700 IS resolves the conflict by creating a file name whose first character is a tilde (~), followed by a 7-digit random number, and a .PDC extension (for example, ~9368412.PDC).

6.5 Data Storage Capacity

Table 16 indicates the approximate number of hours of data logging to the internal memory for several recording intervals based on the standard 64 MB internal memory.

Table 16: Hours of Storage with 64 MB Logging Capacity

Epoch Rate	Average # of Satellites						
	6	7	8	9	10	11	12
1	57	50	44	40	36	33	30
5	270	240	210	190	170	160	140
10	520	460	410	370	340	310	290
15	750	660	600	540	490	460	420
30	1350	1200	1090	990	910	860	800
60	2210	2010	1850	1710	1580	1520	1420

6.6 Resetting the Receiver

Holding the power button down for the appropriate time period (see Section 3.1, *Power Button*, page 20) restores the default factory POWERUP configuration.

The receiver audibly indicates that a reset has occurred. For more information, see Section 3.4, *Audible Annunciator*, page 31.

NOTE Data files on the receiver are not affected by a reset.

Appendix A Technical Specifications

Table 17 summarizes the GSR2700 IS specifications.

NOTE Specifications are subject to change without notice.

Table 17: GSR2700 IS Technical Specifications

Physical	
Size (diameter x height)	22.5 cm x 10.5 cm (8.9 in x 4.1 in)
Weight	Without internal radio: 1.6 kg (3.5 lbs) With internal radio: 1.8 kg (3.9 lbs)
Enclosure Description	The enclosure is constructed of magnesium alloy (main body) and plastic (radome), closed with mounting screws and encircled by a rubber bumper.
Environmental	
Operating Temperature	-20°C to +65°C (-4°F to +149°F)
Storage Temperature	-40°C to +85°C (-40°F to +185°F)
Humidity	100% condensing
Ruggedness	• IP67. Complete protection against dust ingress. Protected against immersion up to 1.0 m (3.3 ft). • Buoyant
Shock[a]	2.0 m pole drop (6.6 ft)

Table 17: GSR2700 IS Technical Specifications (continued)

Vibration (Random Profile)<from Radian IS manual; this section needs to be confirmed or updated>	
The GSR2700 IS can acquire and track satellites while undergoing vibration levels as shown below. It assumes that C/No > 45 db-Hz and that the GSR2700 IS is in high-dynamics mode. Assuming appropriate mounting, the GSR2700 IS conforms to random vibration templates for RTCA/DO-160D, Section 8 (Curve C template), MIL-STD-202F, Test Condition I (Letter A nominal template), and ASAE EP455, Section 5.15.1 nominal template.	
Frequency	< 10 Hz, 10 Hz, 40 Hz, 1000 Hz, 2000 Hz, > 2000 Hz
Magnitude (g2/Hz)	+ 80 dB/decade, 0.00125, 0.02, 0.02, 0.005, -80 dB/decade
Power Requirements	
Power Input	• External: +9 VDC to +18 VDC • Internal: +10.8 VDC
Consumption	<5 W using internal radio
Port	1 x external power port
Peripheral Power Output (COM1 and COM2)	
Voltage	≅ supplied voltage
Current	1 A
Power Management	
Once the internal batteries are completely discharged, the GSR2700 IS becomes inactive. Normal operations are resumed when you charge the internal batteries or when you connect an external power source to the system. For further details, see Section 5.2.2, *External power source*, page 43.	

Table 17: GSR2700 IS Technical Specifications (continued)

Performance (Subject to GPS System Characteristics)	
Frequency	1575.42 MHz (L1) & 1227.60 MHz (L2)
Channels	12 x L1 and 12 x L2 with full code and carrier
Time to First Fix (TTFF)	• Cold start: 50 s (typical)[b] • Warm start: 40 s (typical)[c] • Hot start: 30 s (typical)[d]
Signal Reacquisition	• 0.5 sec L1 (typical) • 0.5 sec L2 (typical)
Computed Data Update Rate	20 solutions per second (maximum)
Measured Data Update Rate	20 data records per second (maximum)
Position Accuracy	**Static[e]:** • 3.0 mm + 0.5 ppm (horizontal) • 10.0 mm + 1 ppm (vertical) **Rapid Static[e]:** • 5.0 mm + 1 ppm (horizontal) • 10.0 mm + 1 ppm (vertical) **Kinematic, Stop-and-Go[e]:** • 10.0 mm + 1 ppm (horizontal) • 20.0 mm + 1 ppm (vertical) **RTK[f]:** • 10.0 mm + 1 ppm (horizontal) • 20.0 mm + 1 ppm (vertical)
Differential (DGPS)	WAAS/EGNOS: 0.8 m CEP
Latency	0.02 sec (typical)
Stand-Alone Position	1.5 m CEP (4.9 ft)
Time Accuracy (relative)[g]	20 ns (SA off)
Height Limit	Up to 18,288 m (60,000 feet), in accordance with export licensing
RTK Initialization[h]	3–10 sec (typical) based on satellite constellation and baseline length

Table 17: GSR2700 IS Technical Specifications (continued)

Memory	
Memory	• Internal: 64 MB standard • Optional: up to 2 GB
Memory Life	500 hours at 10-second interval (6 satellites)
Internal Batteries	
Capacity	2200 mAh
Voltage	10.8 VDC
Chemistry	Li-Ion
Operating Time 20°C	• **Rover:** 10 hours with internal batteries and internal UHF radio • **Static:** 14 hours with internal batteries and no internal radio usage
Charge Time	max. 5 hours
Charging Voltage	14 VDC to 18 VDC, 65 W
Radio Link	
UHF	• compatible with SATEL Satelline-3AS • 380 to 470 MHz • Transmit and Receive (Tx/Rx) • 12.5 kHz channel spacing • Power consumption (typical; at 1 second transmits and in receive mode): <information not yet available> • RF impedance: 50 ohms • RF connector type: TNC female
GSM/GPRS	• Nokia 12 GSM • Frequencies: 850/1800 MHz or 900/1900 MHz band • Power consumption (typical): <information not yet available> • RF connector type: TNC female
Input/Output Data Interface	
Communication ports	2 x RS232, 1 x USB, 1 x Bluetooth, 1 x internal radio
Serial electrical format	EIA/TIA-232-E

Table 17: GSR2700 IS Technical Specifications (continued)

Serial EIA/TIA-232-E Baud Rate	• **COM 1:** 4800, 9600 (default), 19200, 38400, 57600, 115200, 230400, 460800, 921600 • **COM2:** 4800, 9600 (default), 19200, 38400, 57600, 115200, 230400
Serial signals supported	TX, RX, RTS, CTS
Wireless interface	Bluetooth v1.1
USB	USB version v1.1
Input/Output Strobes	
PPS Output[i]	A one-pulse-per-second time synchronization output. This is a normally high, active low pulse (1 ms ± 50 ns) where the falling edge is the reference.
Mark Input[j]	An input mark (negative pulse > 55 ns), time tags output log data to the time of the falling edge of the mark input pulse.
The electrical specifications of the strobe signals are as follows:	
Output	• Voltage: Standard TTL levels • Sink Current: 64 mA • Source Current: 15 mA
Input	• Voltage: Standard TTL levels • Current: ≤ 5 mA
Classifications	
FCC and CE	Complies with the radiated and conducted emission limits for a Class B digital device, for both CISPR and Part 15 of the FCC Rules. For full details, see *GSR2700 IS FCC and CE Notice*, page ii.

a. Shock specifications based on receiver without cables attached.
b. Typical value. No almanac or ephemeris and no approximate position or time.
c. Typical value. Almanac saved and approximate position and time entered. No recent ephemeris.
d. Typical value. Almanac and recent ephemeris saved and approximate position and time entered.
e. Accuracy depends on number of satellites used, obstructions, satellite geometry (DOP), occupation time, multipath effects, atmospheric conditions, baseline length, survey procedures, and data quality. 95% confidence level. Baseline not exceeding 10 km (except for Static survey type).
f. 1 sigma.
g. Time accuracy does not include biases due to RF or antenna delay.

h. Based on unobstructed observing conditions, 7 satellites, and a baseline length of less than 5.0 km.

i. See your local Sokkia distributor for more information.

j. See your local Sokkia distributor for more information.

Glossary

A

Ambiguity—The unknown integer number of cycles of the reconstructed carrier phase. The carrier phase ambiguity is inherent in an unbroken set of measurements from a single satellite pass at a single receiver. Also known as integer ambiguity and integer bias.

Antenna—The antenna is the component of a GPS system that collects the analog signal from the GPS satellite and sends this signal to the GPS receiver for processing.

B

Base station—In differential positioning, a base station is the end of the baseline that is assumed known and its position fixed. It is the GPS receiver which is acting as the stationary reference. It has a known position and transmits messages for the rover receiver, which uses the information to calculate its position. Sometimes referred to as a reference station.

Bluetooth—Wireless personal area network (PAN) standard that enables data connections between electronic devices such as desktop computers, wireless phones, electronic organizers, and printers in the 2.4 GHz range at 240 Kbps within a 30-foot range. Bluetooth depends on mobile devices being equipped with a chip for sending and receiving information.

C

C/A Code—See *Coarse/Acquisition (C/A) Code*.

Carrier phase—The phase of either the L1 or L2 carrier of a GPS signal, measured by a receiver while locked onto the signal (also known as integrated Doppler).

Circular Error Probable (CEP)—The radius of a circle, centered at your true location, that contains 50% of the individual position measurements made.

Coarse/Acquisition (C/A) Code—The Coarse/Acquisition (or Clear/Acquisition) code modulated onto the GPS L1 signal.

D

DOP—See *Dilution of Precision (DOP)*.

DGPS—See *Differential GPS (DGPS)*.

Datum—A model of the Earth used for geodetic calculations.

Differential GPS (DGPS)—A technique to improve GPS accuracy. It primarily uses pseudorange errors at a known location to improve the measurements made by other GPS receivers within the same general geographic area.

Dilution of Precision (DOP)—The geometry of the visible satellites is an important factor in achieving high quality results. The geometry changes with time due to the relative motion of the satellites. An accuracy measure for the geometry is the DOP factor.

E

Elevation mask angle—An adjustable feature in GPS receivers that specifies a satellite must be at least a specified number of degrees above the horizon before the receiver uses the signals from that satellite. Satellites at low elevation angles (five degrees or less) have lower signal strengths and are prone to loss of lock and multipath.

Ellipsoid—A smooth mathematical surface that represents the Earth's shape and very closely approximates the geoid. It is used as a reference surface for geodetic surveys.

Ellipsoidal height—The height above a defined ellipsoid, approximating the surface of the Earth.

Ephemeris—A set of satellite orbit parameters used by a GPS receiver to calculate precise GPS satellite positions and velocities. The ephemeris is used in the determination of the position solution and is updated periodically. Available as "broadcast ephemeris" or as post-processed "precise ephemeris".

G

GPRS—See *General Packet Radio Service (GPRS)*.

GPS—See *Global Positioning System (GPS)*.

GSM—See *Global System for Mobile Communications (GSM)*.

Global Positioning System (GPS)—A space-based radio positioning system which provides suitably equipped users with accurate position, velocity, and time data.

Global System for Mobile Communications (GSM)—A digital cellular phone technology based on TDMA. First introduced in 1991, the GSM standard has been deployed at three different frequency bands: 900 MHz, 1800 MHz, and 1900 MHz. GSM uses narrowband TDMA which allows eight simultaneous calls on the same radio frequency.

General Packet Radio Service (GPRS)—Technology that allows mobile phones to be used for sending and receiving data over an Internet Protocol (IP) based network.

GPS Time—The time system upon which GPS is based. GPS time is an atomic time system and is related to International Atomic Time in the following manner: International Atomic Time (IAT) = GPS + 19.000 sec. The IAT and Universal Time Coordinated (UTC) are closely related. The difference is that UTC contains leap seconds to adjust for changes in the earth's rotation. See *Universal Time Coordinated (UTC)*.

I

Integer ambiguity/bias—See *Ambiguity*.

Integrated Doppler—See *Carrier phase*.

Ionosphere—The layers of ionized air in the atmosphere extending from 70 kilometers to 700 kilometers and higher. Depending on frequency, the ionosphere can either block radio signals completely or change the propagation speed. GPS signals penetrate the ionosphere but are delayed. This delay induces error in the GPS measurements that can result in poor survey results. Most GPS receivers/processing software model the ionosphere to minimize its affects. Also, the effects of ionosphere can be nearly eliminated by using dual frequency receivers which can calculate the delay due to ionosphere.

L

L1—The 1575.42 MHz GPS carrier frequency, which contains the course acquisition (C/A) code, as well as encrypted P-code and navigation messages used by commercial GPS receivers.

L2—A secondary GPS carrier (at 1227.60 MHz) that contains only the encrypted P-code.

L-Band—The range of radio frequencies that includes the GPS L1 and L2 carrier frequencies and the OmniSTAR satellite signals.

M

Mask angle—See *Elevation mask angle*.

Multipath—The reception of a satellite signal both along a direct path and along one or more reflected paths. Reflecting surfaces near the GPS antenna cause this type of reflected signal. The resulting signal results in an incorrect measurement and thus errors in position estimates. In other words, these are errors caused by the interaction of the GPS satellite signal and reflections.

N

NMEA—National Marine Electronics Association, an organization that created an industry standard ASCII log types used by many receivers.

O

Occupation time—A period of continuous data of sufficient quality for post-processing.

P

P-Code (Precise or Protected)—The protected or precise code used on both LI and L2 GPS frequencies.

Phase Center—The phase center of a GPS antenna is the physical location on the antenna where the raw GPS signals are observed. This is the physical location where the computed position will be determined.

Pseudorange—The calculated range from the GPS receiver to the satellite. It is determined by taking the difference between the measured satellite transmit time and the receiver time of measurement, and multiplying it by the speed of light.

R

RMS—See *Root-Mean-Square (RMS)*.

Radio Technical Commission for Maritime Services (RTCM)—Radio Technical Commission for Maritime Services. An organization that developed and defined the SC-104 message format for differential positioning.

Raw data—GPS data which has not been processed or differentially corrected.

Real-time Kinematic (RTK)—A type of differential positioning based on observations of carrier phase.

Reference station—See *Base station*.

Rover receiver—The GPS receiver that moves from site to site during an RTK survey. The receiver does not know its position and needs to receive measurements from a base station to calculate differential GPS positions at each point.

Root-Mean-Square (RMS)—A statistical measure of the scatter of computed positions about a “best fit” position solution.

S

SLA—Sealed Lead Acid battery.

SIM card—Subscriber Identify Module card. A small printed circuit board that must be inserted in any GSM-based mobile phone when signing on as a subscriber. It contains subscriber details, security information, and memory for a personal directory of numbers. The SIM card also stores data that identifies the caller to the network service provider.

T

TNC—A threaded version of the Bayonet Neill-Concelman (BNC) connector.

Time-To-First-Fix (TTFF)—The actual time required by a GPS receiver to achieve a single point position solution. This specification varies with the operating state of the receiver, the length of time since the last position fix, the location of the last fix, and the specific receiver design.

U

Universal Serial Bus (USB)—An external peripheral interface standard for communication that supports data transfer rates up to 480 Mbps.

Universal Time Coordinated (UTC)—The time as maintained by the U.S. Naval Observatory. Due to variations in the Earth's rotation, the UTC is sometimes adjusted by an integer second. The accumulation of these adjustments compared to GPS time, which runs continuously, caused an 13 second offset between GPS time and UTC at the start of 1999. However, after accounting for leap seconds and using adjustments contained in the navigation message, GPS time can be related to UTC to within 20 nanoseconds or better.

W

WGS84—The World Geodetic System 1984 is an coordinate system designed to fit the shape of the Earth as much as possible. It is often used as a reference on a worldwide basis, while other coordinate systems are used locally to provide a better fit to the Earth in a local region.

Index

A

anchor point, 16
antennas
  GPS, 16
  internal radio, 13, 17
  wireless communication, 12
audible annunciator, 31–33

B

base components, 5
base setup
  RTK, 37–40
  static, 40
batteries
  battery life gauge, 27
  external, 14–15, 43
  internal, 15, 42–43, 46
  low condition, 32
  power output, 14, 44
Bluetooth. *See* wireless communication
button, power. *See* power button

C

cables, 14–15
cautions for usage, 6
charging internal batteries, 27, 43, 46
collecting data, 48–54
color coding of ports, 14
COM ports, 14, 24
communication
  ports, 14, 24–25
  status indicators, 24–25
  wireless. *See* wireless communication
components, 3–5, 10–18
configurations. *See* POWERUP configuration
consumption, power, 44
corrections, ionospheric, 2
covers for ports, 12
current, maximum, 6
customer support, 9

D

data
  collecting, 48–54
  defining for collection, 49–52
  file naming, 53
  loss of, 45
  storage, 48, 54
  transferring, 34–35
  See also files
default POWERUP configuration, 50
deleting files, 22
display panel
  features, 20–33
  icons, 7
  overview, 19–20
documentation
  conventions, 8
  related, 8
downloading data, 34–35

E

enclosure, overview of, 10
erasing the memory, 22
error conditions, 23
external battery, 14–15, 43

F

factory reset, 22, 54
features summary, 2

field setup, 35
files
  deleting, 22
  naming conventions, 53
  See also data
formats, logs, 3

G

gauges
  about
  battery life, 27
  memory, 29
  occupation timer, 30
  satellite tracking, 28
GSM/GPRS radio, 17

H

handheld data collection, 48
height measurement point, 16

I

icons, 7
indicators, status. *See* status indicators
insufficient power, 45
interruptions, logging, 42
ionospheric corrections, 2

L

LEDs. *See* gauges; status indicators
log formats, 3
logging
  interruptions, 42
  memory capacity, 54
  rates, 3
  to internal memory, 49

M

maximum current, 6
memory, internal
  about, 16
  erasing, 22
  full or low conditions, 32–33
  gauge, 29
  logging to, 49
modes of operation, 2
mounting socket, 11

N

naming conventions, files, 53

O

occupation timer gauge, 30
office setup, 34–35
operation
  display panel, 19–33
  modes, 2
  overview, 46
optional components, 5
output power, 14, 44
overview, 1

P

peripheral devices, powering, 14, 44
phase center offset, 11
ports
  antenna, 13, 17
  color coding, 14
  communication, 14, 24–25
  covers for, 12
  icons, 7
  overview, 12–13
  power, 14
  status indicators, 24
post-processing data, 34–35
power
  consumption, 44
  input, 14–15, 43
  insufficient, 45
  output, 14, 44

power button
about, 20, 42
functions, 21–22
power port, 14
POWERUP configuration
default, 50–52
overview, 49
transferring, 52

R

radio, internal
about, 17
antenna, 13, 17
status indicators, 26
rates, logging, 3
receiver health indicator, 23
resetting the receiver, 22, 54
rover components, 4
rover setup, 35–37

S

satellite tracking gauge, 28
schedules, 49
setup
about, 34
office, 34–35
RTK base, 37–40
RTK rover, 35–37
static base, 40
shutdown, 21
SIM card, 17
socket, mounting, 11
sounds. *See* audible annunciator
specifications, 55–60
startup sequence, 21
static setup, 40
status indicators, 22
storage of data, 48, 54
support, technical, 9
system components, 3–5, 10–18
system setup. *See* setup

T

tape measure anchor point, 16
technical specifications, 55–60
technical support, 9
transferring data, 34–35
transferring POWERUP configuration, 52
troubleshooting, 23

U

UHF radio, 17
usage cautions, 6
USB communication, 14

V

voice messages. *See* audible annunciator

W

warning conditions, 23
wireless communication
about, 1, 17
antenna, 11
status indicators, 25

<CE declaration document not yet available>

SOKKIA has been delivering superior products, sales and support around the world since 1920. You can find an authorized SOKKIA representative in nearly every region of the globe. For customer service, we recommend that you contact your local SOKKIA distributor. If you need assistance locating a distributor in your area, please contact the appropriate SOKKIA worldwide office listed below.

AFRICA, MIDDLE EAST, SOUTH EAST ASIA

SOKKIA Singapore Pte. Ltd.
Singapore
Ph: +65-6479-3966
Fax: +65-6479-4966
E-mail: sales@sokkia.com.sg
Web: www.sokkia.com.sg

CENTRAL & SOUTH AMERICA

POINT, Inc.
Olathe, Kansas, U.S.A.
Ph: +1 800-764-6848
+1 913-928-2787
Fax: +1 913-492-8233
E-mail: product-orders@point-inc.com

SOKKIA Latin America
Miami, Florida, U.S.A.
Ph: +1 305-599-4701
Fax: +1 305-599-4703
E-mail: sales.info@sokkiala.com
Web: www.sokkialatinamerica.com

CHINA

SOKKIA Co. Ltd. Shanghai Representative Office
Shanghai, People's Republic of China
Ph: +86-21-63541844
Fax: +86-21-63172083
E-mail: sokkia1@online.sh.cn
Web: www.sokkia.com.cn

EUROPE

SOKKIA B.V.
Almere, The Netherlands
Ph: +31-36-5322880
Fax: +31-36-5326241
E-mail: sales@sokkia.net
Web: www.sokkia.net

JAPAN

SOKKIA Co. Ltd. International Dept.
Atsugi, Kanagawa, Japan
Ph: +81-46-248-7984
Fax: +81-46-247-1731
Web: www.sokkia.com.jp

OCEANIA (AUSTRALIA/NEW ZEALAND)

POINT Oceania
Newcastle, New South Wales, Australia
Ph: +61-2-4925-7730
Fax: +61-2-4925-7735
E-mail: pointaustralia@bigpond.com

SOKKIA Pty. Ltd.
Rydalmere, New South Wales, Australia
Ph: +61-2-9638-2400
Fax: +61-2-9638-2200
E-mail: sales@sokkia.com.au
Web: www.sokkia.com.au

NORTH AMERICA

POINT, Inc.
Olathe, Kansas, U.S.A.
Ph: +1 800-764-6848
+1 913-928-2787
Fax: +1 913-492-8233
E-mail: product-orders@point-inc.com

SOKKIA Corporation U.S.A.
Olathe, Kansas, U.S.A.
Ph: +1 800-4-SOKKIA
+1 913-492-4900
Fax: +1 913-492-0188
E-mail: customerservice@sokkiacorp.com
Web: www.sokkia.com

SOKKIA Corporation Canada
Mississauga, Ontario, Canada
Ph: +1 905-238-5810
Fax: +1 905-238-9383
E-mail: support@sokkiacorp.com
Web: www.sokkiacanada.com

SOUTH KOREA

SOKKIA Korea Co. Ltd.
Seoul, Republic of Korea
Ph: +82-2-514-0491
Fax: +82-2-514-0495
E-mail: sokkia@sokkia.co.kr
Web: www.sokkia.co.kr

TAIWAN

Meridware Co., Ltd.
Taichung, Taiwan
Ph: +886-4-2384 3549
Fax: +886-4-238 28213
E-mail: merid@meridware.com.tw
Web: www.meridware.com.tw