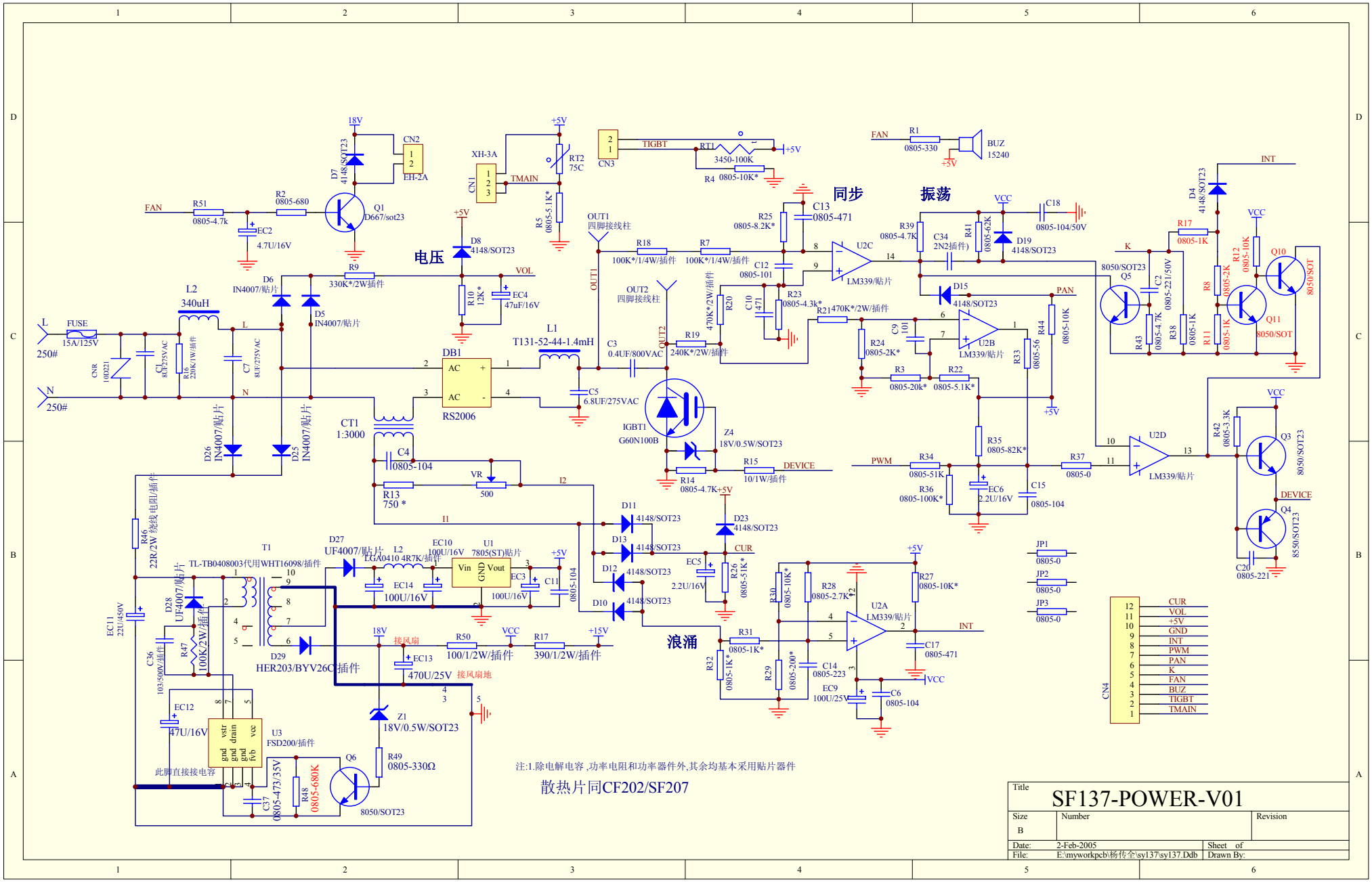
电压
同步
振荡
浪涌
注:1.除电解电容 ,功率电阻和功率器件外,其余均基本采用贴片器件
散热片同CF202/SF207
Title
SF137-POWER-V01
Size
B
Number
Revision
Date: 2-Feb-2005
Sheet of
File: E:\myworkpcb\杨传全\sy137\sy137.Ddb
Drawn By:

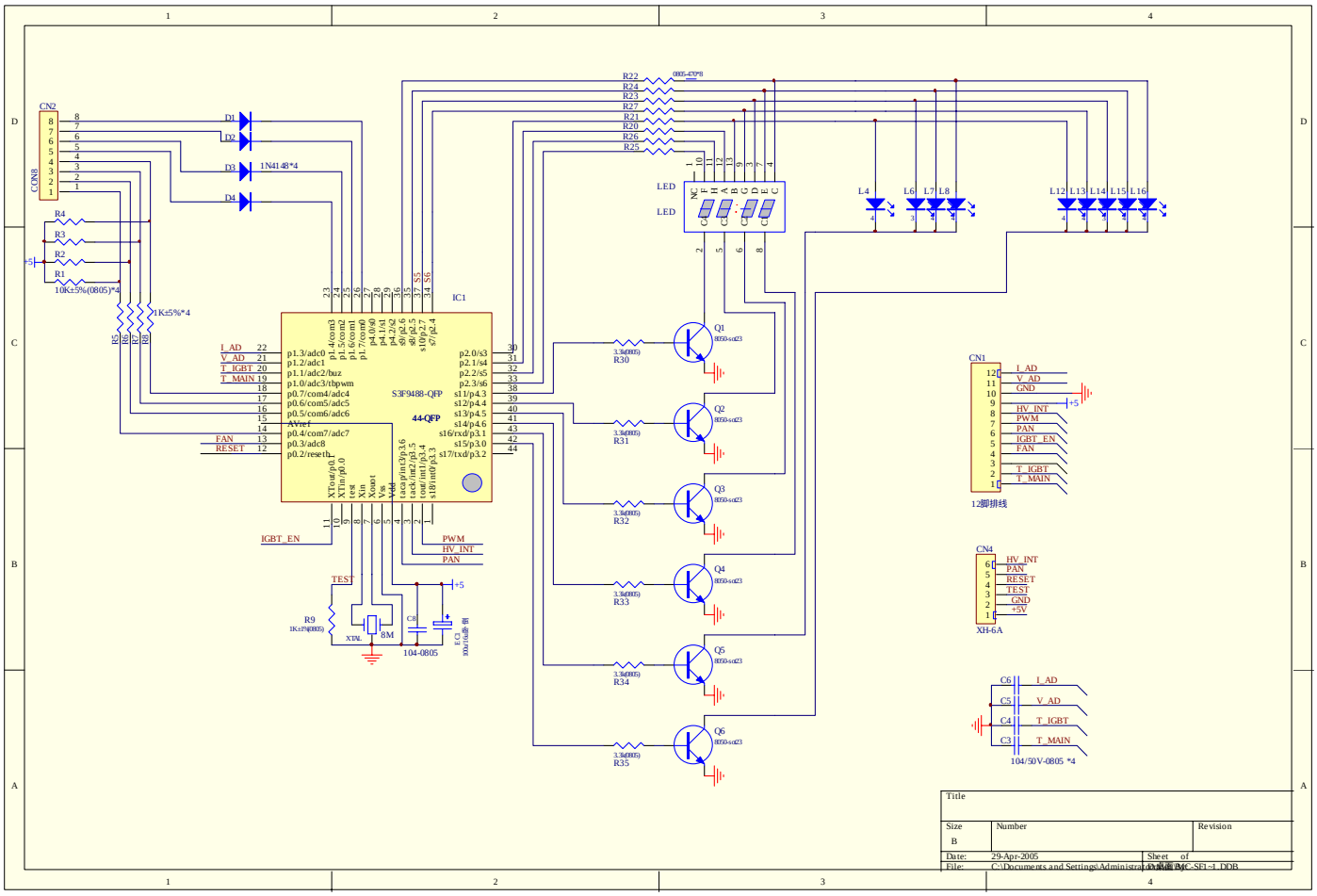

Title		
Size B	Number	Revision
Date: 29-Apr-2005	Sheet of	
File: C:\Documents and Settings\Administrator\桌面\MC-SF1-1_DDB		