ESTECH Co., Ltd. Rm 1015, World Venture Center II, 426-5 Gasan-dong, Guncheon-gu, Seoul, 158-803, Korea	MIC KOLAS VCI FC	**Electromagnetic Interference Test Report**

Compliance Test Report for FCC

Report Number		ESTF150505-004		
Applicant	Company name	THOTH PIA CO., LTD.		
	Address	Honors Vill 4F, Sungnai-Dong 199-17, Kangdong-Gu, Seoul 134-030, Korea		
	Telephone	82-2-477-0721		
Product	Product name	VoiceSafer		
	Model No.	Transfer	Manufacturer	THOTH PIA CO., LTD.
	Serial No.	NONE	Country of origin	KOREA
Test date	2005-05-04 ~2005-05-13		Date of issue	2005-05-13
Test location	ESTECH. Co., Ltd. 97-1 Hoiuk-Ri Majang-Myon, Icheon-city, KyungKi-Do, Korea			
Standard	FCC PART 15 2002 , ANSI C 63.4 2001			
Test item	■ Conducted Emission	☐ Class A ■ Class B	Test result	OK
	■ Radiated Emission	☐ Class A ■ Class B	Test result	OK
Measurement facility registration number		94696		
Tested by	Engineer J.H.Kim	(Signature)		
Reviewed by	Manager Engineer J.M.Yang	(Signature)		
Abbreviation	OK, Pass = Passed, Fail = Failed, N/A = not applicable			

* Note

- This is certified that the above mentioned producs have been tested for the sample provided by client
- No part of this document may be duplicated or reproduced by any means without the express written permission of the Estech Co., Ltd.

Contents

1. Laboratory Information 3

2. Description of EUT 4

3. Test Standards 5

4. Measurement condition 6

5. Measurement of radiated emission 8

5.1 Measurement equipment 8

5.2 Environmental conditions 8

5.3 Test data 9

6. Measurement of conducted emission 10

6.1 Measurement equipment 10

6.2 Environmental conditions 10

6.3 Test data 11

7. Photographs of test setup 12

8. Photographs of EUT 14

Appendix 1. Spectral diagram

Appendix 2. Phorographs of EUT in side PCB

Appendix 3. Block diagram of EUT

Appendix 4. Circuit Diagram

1. Laboratory Information

1.1 General

This EUT (Equipment Under Test) has been shown to be capable of compliance with the applicable technical standards and is tested in accordance with the measurement procedures as indicated in this report.
ESTECH attests to accuracy of test data. All measurement reported herein were performed by ESTECH Co., Ltd.
ESTECH assume full responsibility for the completeness of these measurements and vouch for the qualifications of all persons taking them.

1.2 Test Lab.

Corporation Name : ESTECH Co. Ltd

Head Office : Rm 1015, World Venture Center II, 426-5, Gasan-dong, Geumcheon-gu, Seoul, Kor
(Safety & Telecom. Test Lab)

EMC Test Lab : 58-1 Osan-Ri, GaNam-Myon, YeoJoo-Gun, KyungKi-Do, Korea
97-1 Hoiuk-Ri Majang-Myon, Icheon-city, KyungKi-Do, Korea

1.3 Official Qualification(s)

FCC : Filed Laboratory at Federal Communications Commission

2. Description of EUT

2.1 Summary of Equipment Under Test

Product	: VoiceSafer
Model Number	: Transfer
Serial Number	: NONE
Manufacturer	: THOTH PIA CO., LTD.
Country of origin	: KOREA
Rating	: DC 5V
Receipt Date	: 2004-07-12

2.2 General descriptions of EUT

VoiceSafer is a hardware device that accepts every kinds of sound as a sound source and transfers it to a computer with ultra speed after converts it to digital signal on circuit.
And software is included which is able to convert transferred digital signal to a MP3 type compressed file and store it in a hard disk drive.
Recorded file can be encrypted for protecting individual privacy.

**List of Each Osciallator or Crystal Frequency

Crystal Frequency	12Mhz

3. Test Standards

Test Standard : FCC PART 15 (2002)

This Standard sets out the regulations under which an intentional, unintentional, or incidental radiator may be operated without an individual license. It also contains the technical specifications, administrative requirements and other conditions relating to the marketing of Part 15 devices.

Test Method : ANSI C 63.4 (2001)

This standard sets forth uniform methods of measurement of radio-frequency (RF) signals and noise emitted from both unintentional and intentional emitters of RF energy in the frequency range 9 kHz to 40 GHz. Methods for the measurement of radiated and AC power-line conducted radio noise are covered and may be applied to any such equipment unless otherwise specified by individual equipment requirements. These methods cover measurement of certain decides that deliberately radiate energy, such as intentional emitters, but does not cover licensed transmitters. This standard is not intended for certification/approval of avionic equipment or for industrial, scientific, and medical (ISM) equipment These method apply to the measurement of individual units or systems comprised of multiple units

4. Measurement Condition

4.1 EUT Operation.

* The EUT was in the following operation mode during all testing

* The operational conditions of the EUT was determined by the manufacturer according to the typical use of the EUT with respect to the expected hightest level of emission

* After setting as test arrangement diagram, we test EUT under audio recoding.

4.2 Configuration and Peripherals

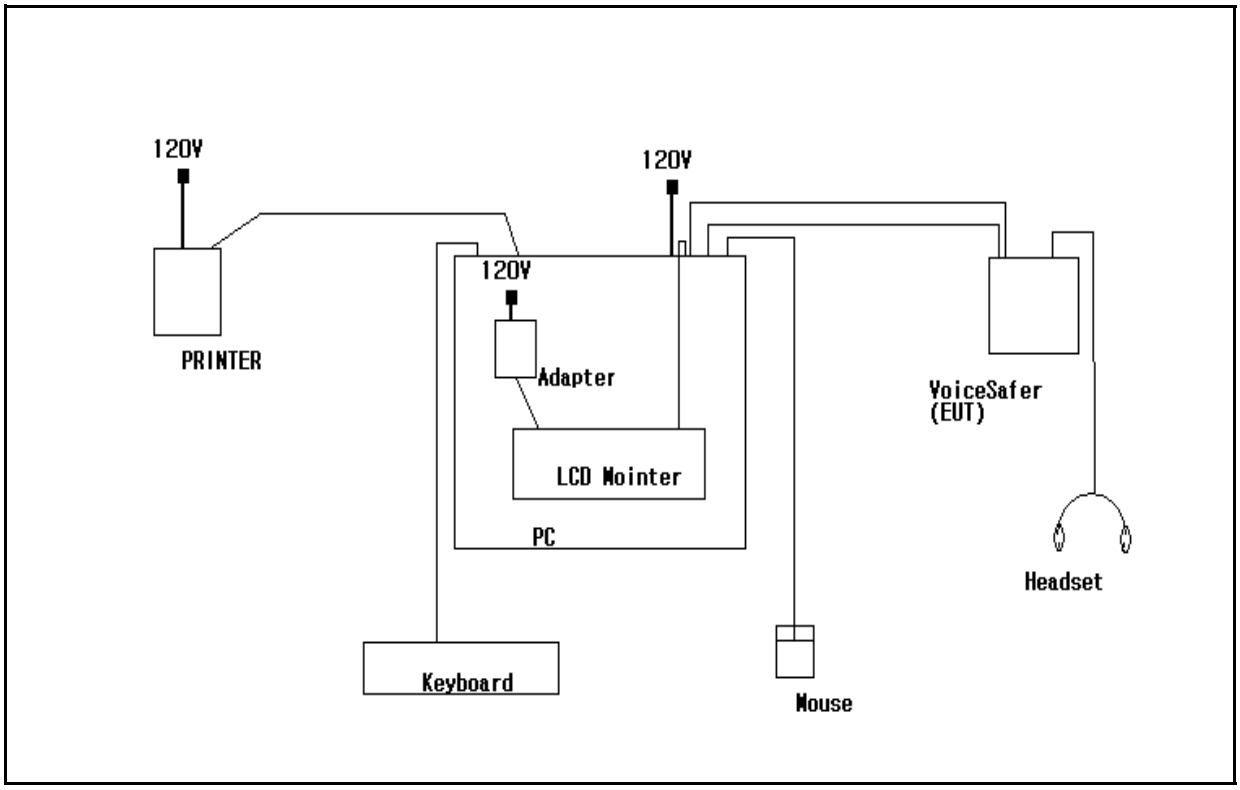

4.3 EUT and Support equipment

Equipment Name	Model Name	S/N	Manufacturer	Remark (FCC ID)
VoiceSafer	Transfer	NONE	THOTH PIA CO., LTD.	
PERSONAL COMPUTER	OptiPlex GX50	NONE	DELL	
PRINTER	LQ-570H+	B1021095782	Trigem Computer Inc.,	
KEYBOARD	SEM-DT35	32006557	Samsung Electro-mechanics Co., Ltd.,	
MOUSE	M-S48a	HCA31409057	Logitech	
LCD MONITOR	KD17NS	N433H4KX300852K	Samsung Electronics Co., Ltd.,	
ADAPTER	AP04914-UV	0401011616AC	AnamInstruments Co., Ltd.	
HEADSET	SEM-CN110	NONE	Samsin	

4.4 Cable Connecting

Start Equipment		End Equipment		Cable Standard		Remark
Name	I/O port	Name	I/O port	Length(m)	Shielded	
VoiceSafer	USB	PC	USB	1.0	Y	
VoiceSafer	SOUND-IN	PC	-	1.0	N	
VoiceSafer	SOUND-OUT	HEADSET	-	2.0	N	
PC	PS/2KEYBOARD	KEYBOARD	PS/2KEYBOARD	2.0	N	
PC	PS/2 MOUSE	MOUSE	PS/2 MOUSE	2.0	N	
PC	VIDEO	LCD MONITOR	VIDEO	2.0	N	
PC	PARALLEL	PRINTER	PARALLEL	2.0	Y	
LCD MONITOR	POWER	ADAPTER	POWER	2.0	Y	

5. Measurement of radiated disturbance

Above 30 MHz Electric Field strength was measured in accordance with FCC Part 15 (2002) & ANSI C 63.4 (2001). The test setup was made according to FCC Part 15 (2002) & ANSI C 63.4 (2001) on an open test site, which allows a 3m distance measurement. The EUT was placed in the center of wooden turntable. The height of this table was 0.8m. The measurement was conducted with both horizontal and vertical antenna polarization. The turntable has fully rotated. For further description of the configuration refer to the picture of the test set-up.

5.1 Measurement equipments

Equipment Name	Type	Manufacturer	Serial No.	Next Calibration date
TEST Receive	ESPI7	Rohde & Schwarz	100185	2005. 8. 20
Spectrum Analyzer	R3261C	ADVANTEST	61720116	2006. 4. 10
LogBicon Antenna	VULB 9160	S/B	3142	2005. 7. 06
Horn Antenna	BBHA 9120 D	SCHWARZBECK	352	2006. 4. 06
Turn Table	2087	EMCO	2129	-
Antenna Mast	2070-01	EMCO	9702-203	-
ANT Mast Controller	2090	EMCO	1535	-
Turn Table Controller	2090	EMCO	1535	-

5.2 Environmental Condition

Test Place : Open site(3m)

Temperature (°C) : 23 ℃

Humidity (%) : 34 %

5.3 Test data

Measurement Distance : 3 m

Frequency (MHz)	Reading (dBμV)	Position (V/H)	Height (m)	Correction Factor		Result Value		
				Ant Factor (dB)	Cable (dB)	Limit (dBμV/m)	Result (dBμV/m)	Margin (dBμV/m)
48.00	18.50	V	1.0	12.78	1.0	40.0	32.29	-7.71
60.00	12.30	V	1.0	12.67	1.2	40.0	26.12	-13.88
72.00	11.10	H	2.4	11.02	1.3	40.0	23.41	-16.59
84.00	14.20	H	2.1	8.85	1.3	40.0	24.39	-15.61
120.00	8.70	V	1.0	12.03	1.7	43.5	22.41	-21.09
144.00	15.40	V	1.0	13.40	1.9	43.5	30.67	-12.83
192.00	21.90	V	1.0	11.14	2.2	43.5	35.23	-8.27
216.00	16.70	H	1.4	10.72	2.3	43.5	29.69	-13.81
240.01	18.40	H	1.4	11.71	2.4	46.0	32.51	-13.49
288.02	13.80	H	1.2	12.98	2.6	46.0	29.39	-16.61
312.01	14.10	H	1.2	13.45	2.7	46.0	30.30	-15.70
336.00	21.30	H	1.0	13.99	2.8	46.0	38.11	-7.89
360.02	16.70	H	1.0	14.39	3.0	46.0	34.09	-11.91
408.01	13.40	H	1.0	15.50	3.2	46.0	32.07	-13.93
432.02	14.70	H	1.0	16.01	3.2	46.0	33.95	-12.05
456.01	15.90	H	1.0	16.45	3.4	46.0	35.74	-10.26
528.00	8.10	V	1.0	17.47	3.6	46.0	29.16	-16.84
648.01	9.60	H	1.0	19.60	4.1	46.0	33.29	-12.71
Remark	H : Horizontal, V : Vertical							

6. Measurement of conducted disturbance

The continuous disturbance voltage of AC Mains in the frequency from 0.15 to 30 MHz was measured in accordance to FCC Part 15 (2002) & ANSI C 63.4 (2001) The test setup was made according to FCC Part 15 (2002) & ANSI C 63.4 (2001) in a shielded. The EUT was placed on a non-conductive table at least 80 above the ground plan. A grounded vertical reference plane was positioned in a distance of 40cm from the EUT. The distance from the EUT to other metal surfaces was at least 0.8m. The EUT was only earthen by its power cord through the line impedance stabilizing network. The power cord has been bundled to a length of 1.0m.. The test receiver with Quasi Peak detector complies with CISPR 16.

6.1 Measurement equipments

Equipment Name	Type	Manufacturer	Serial No.	Next Calibration date
LISN	ESH3-Z5	Rohde & Schwarz	838979/010	2006. 2. 18
LISN	NNLA8120A	Schwarzbeck	NONE	2006. 2. 18
TEST Receive	ESPI7	Rohde & Schwarz	100185	2005. 8. 20
Pulse Limiter	ESH3Z2	Rohde & Schwarz	NONE	2005. 6. 15

6.2 Environmental Condition

Test Place : Shield Room

Temperature (°C) : 22 ℃

Humidity (%) : 39 %

6.3 Test data

Frequency (MHz)	Correction Factor		Line (H/N)	Quasi-peak Value			Average Value		
	Lisn (dB)	Cable (dB)		Limit (dBμV)	Reading (dBμV)	Result (dBμV)	Limit (dBμV)	Reading (dBμV)	Result (dBμV)
0.157	0.07	0.0	H	65.62	51.94	52.01	55.62	51.21	51.28
0.198	0.07	0.0	N	63.69	38.27	38.37	53.69	36.14	36.24
0.203	0.07	0.0	H	63.49	40.14	40.25	53.49		
0.242	0.07	0.1	H	62.03	32.34	32.47	52.03	30.91	31.04
0.313	0.07	0.1	H	59.89	41.80	41.98	49.89	40.80	40.98
0.405	0.07	0.2	H	57.75	33.22	33.44	47.75	30.79	31.01
0.413	0.07	0.2	N	57.59	32.55	32.78	47.59		
0.470	0.07	0.2	H	56.51	39.24	39.50	46.51	36.70	36.96
0.624	0.08	0.2	N	56.00	39.99	40.27	46.00	35.60	35.88
0.781	0.09	0.2	N	56.00	39.21	39.50	46.00	33.55	33.84
0.935	0.09	0.2	N	56.00	38.58	38.87	46.00	31.82	32.11
1.039	0.09	0.2	N	56.00	33.36	33.65	46.00		
1.873	0.11	0.3	N	56.00	34.44	34.83	46.00	28.13	28.52
2.830	0.13	0.3	H	56.00	34.87	35.30	46.00		
3.288	0.15	0.3	H	56.00	36.20	36.65	46.00	28.87	29.32
3.591	0.16	0.3	N	56.00	36.15	36.61	46.00	31.30	31.76
4.007	0.17	0.3	H	56.00	35.63	36.10	46.00		
5.938	0.24	0.3	H	60.00	30.46	31.04	50.00	23.99	24.57
6.286	0.25	0.4	N	60.00	30.99	31.61	50.00		
9.017	0.33	0.5	H	60.00	29.62	30.49	50.00		
12.305	0.48	0.7	H	60.00	35.84	37.01	50.00		
12.832	0.50	0.7	N	60.00	33.61	34.82	50.00		
13.144	0.52	0.7	H	60.00	36.73	37.97	50.00		
13.928	0.56	0.8	N	60.00	35.97	37.28	50.00		
19.624	0.69	0.8	H	60.00	30.06	31.55	50.00		
19.663	0.69	0.8	N	60.00	32.89	34.38	50.00	24.76	26.25
27.456	0.76	0.9	N	60.00	31.72	33.38	50.00	23.70	25.36
Remark	H : Hot Line, N : Neutral Line								

7. Photographs of test setup

7.1 Setup for Radiated Test : 30 ~ 1000 MHz

[Front]

[Rear]

7.2 Setup for Conducted Test : 0.15 ~ 30 MHz

[Front]

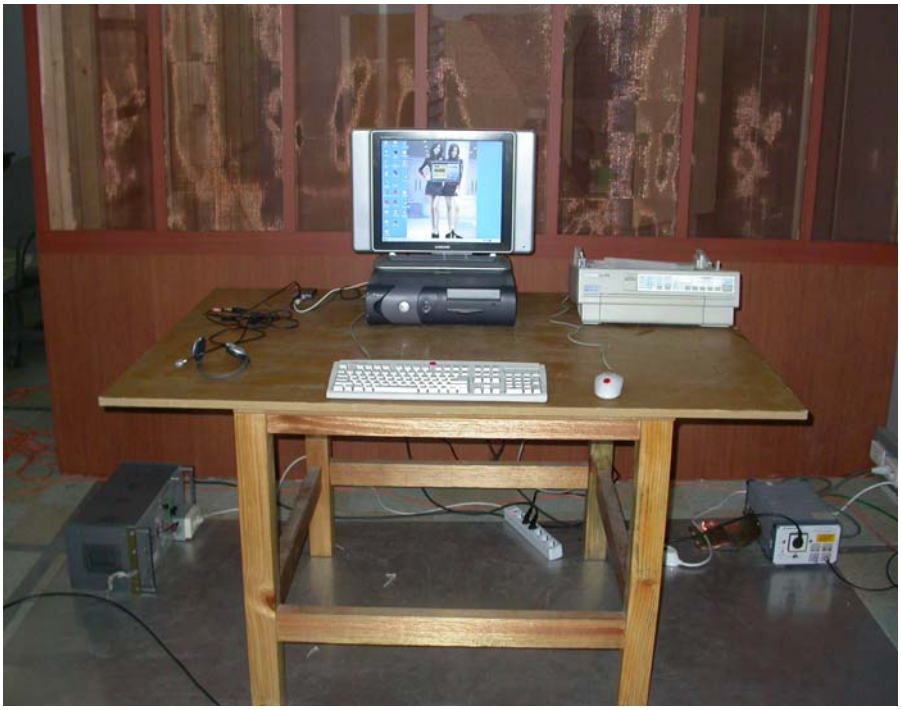

[Rear]

8. Photographs of EUT

[Front]

[Rear]

Appendix 1. Spectral diagram

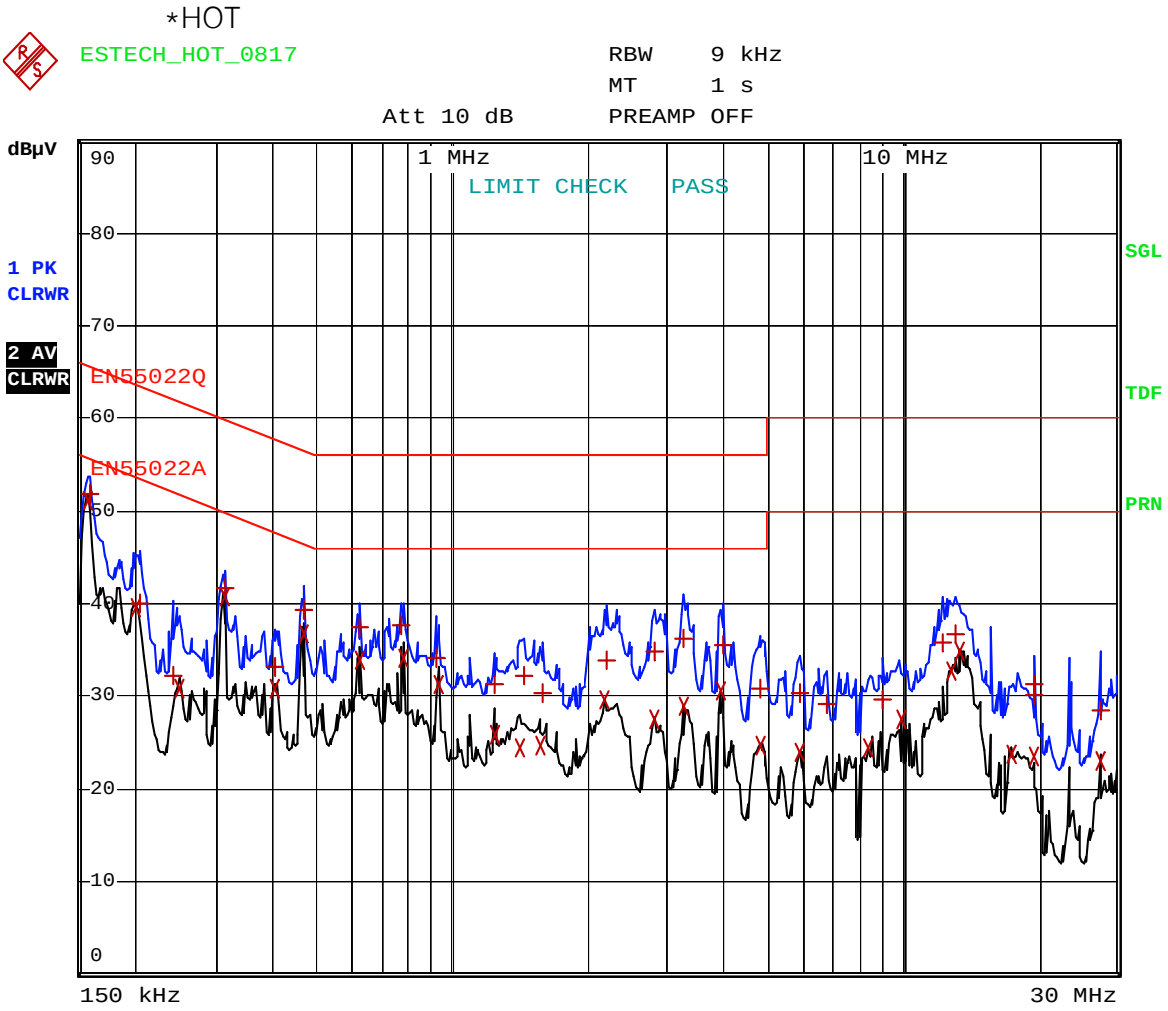

Comment: THOTH PIA CO.,LTD_Voice Safer_Transfer HOT
Date: 5.MAY.2005 06:55:12

*NETRUL

ESTECH_NEUTRAL_0817

RBW 9 kHz
MT 1 s
Att 10 dB PREAMP OFF

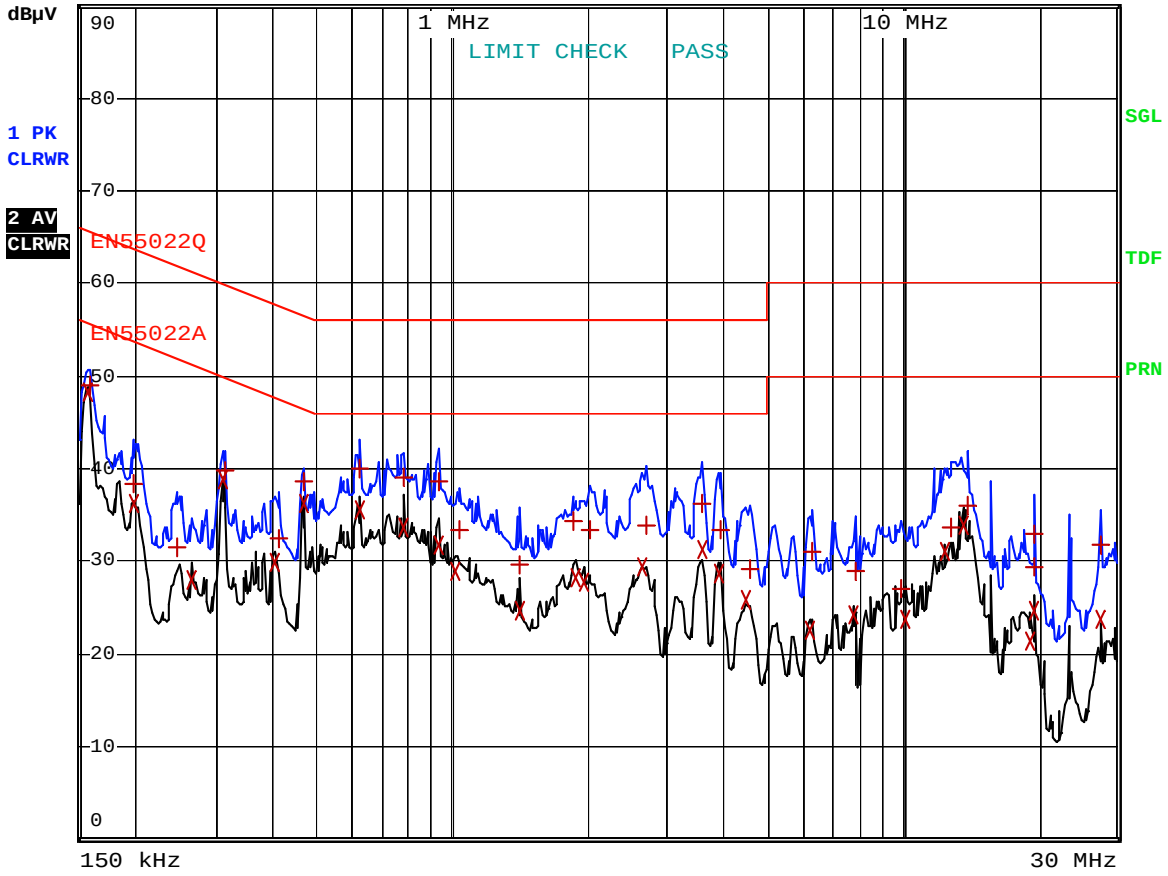

Comment: THOTH PIA CO.,LTD_Voice Safer_Transfer NEUTRAL
Date: 5.MAY.2005 06:42:00

Appendix 2. Phorographs of EUT in side PCB

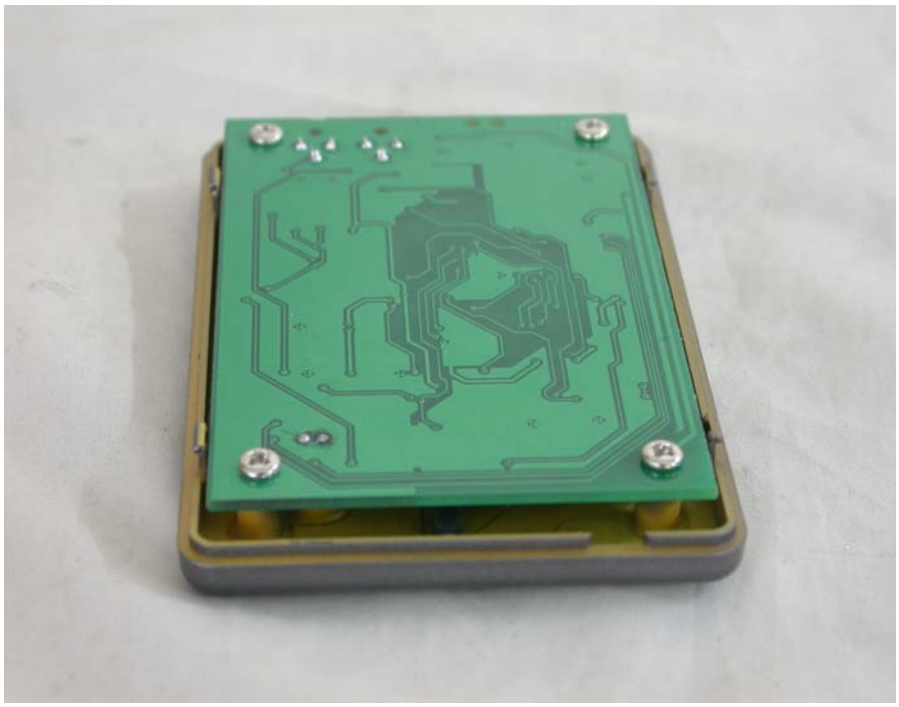

Appendix 3. Block diagram of EUT

VoiceSafer PCB Block Diagram

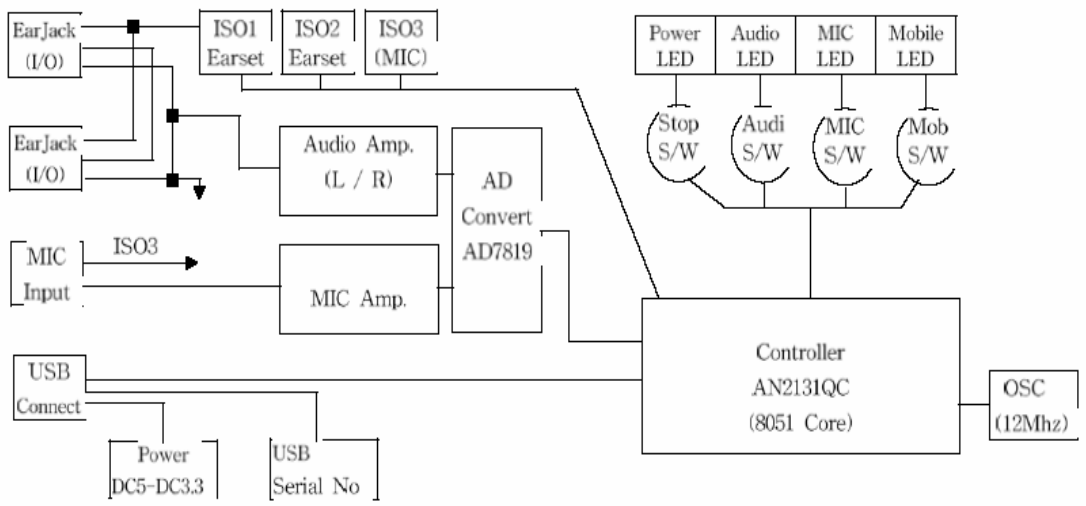

[VoiceSafer Switing Block Diagram]

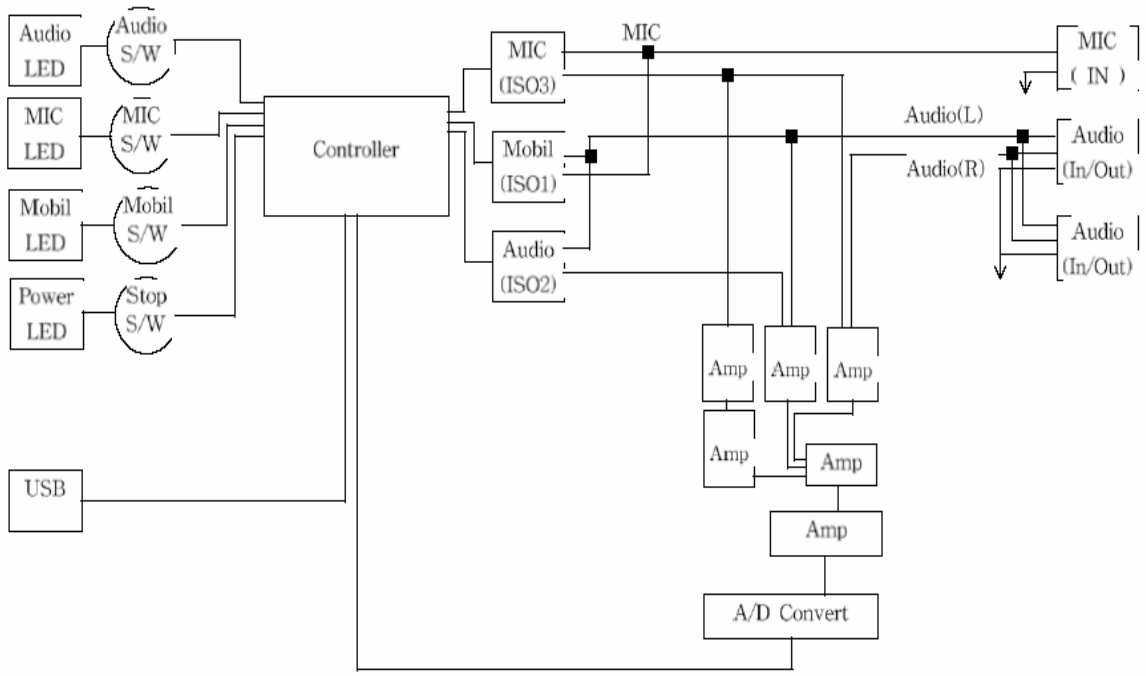

Appendix 4. Circuit Diagram