Certification of Compliance

CFR 47 Part 15 Subpart B

Test Report File No.	:	05-IST-0210	**Date of Issue** :	June 15, 2005
Model(s)	:	PE-14		
Kind of Product	:	Powerline Ethernet Adapter		
FCC ID	:	TCDPE-14		
Applicant	:	KIT Co., Ltd.		
Address	:	168-26 Simi-Dong, Gumi-Si, GyeongsangBuk-Do, Korea		
Manufacturer	:	KIT Co., Ltd.		
Address	:	168-26 Simi-Dong, Gumi-Si, GyeongsangBuk-Do, Korea		

Test Result ■ **Positive** ☐ **Negative**

Reviewed By

S.J.Cho / EMC Group Manager

Approved By

J.H.Lee / Chief

Comment(s)

- Investigations requested : Measurement to the relevant clauses of FCC rules and regulations Part 15 Subpart B - Unintentional Radiators, Class B.
- The test report with appendix consists of 18 pages.
- The test result only responds to the tested sample.
- It is not allowed to copy this report even partly without the allowance of IST EMC Laboratory.
- This equipment as for has been shown to be capable of continued compliance with the applicable technical standards as indicated in the measurement report and was tested in accordance with the measurement procedures specified in ANSI C63.4 2003.

TABLE OF CONTENTS

Table of contents 2

Information of test laboratory, Environmental conditions, Power used, Product information 3

Descriptions of test

Conducted Emission 4

Radiated Emission 5

Equipment Under Test 6

Test Set-Up (Figure) 7

Summary 8

■ **Test Conditions and Data – Emissions**

◆ Conducted Emissions 535kHz - 1.705MHz Applicable

Test Conditions / Data and Plots 9-11

◆ Radiated Emissions 9kHz - 30MHz Applicable

Test Conditions / Data and Plots 12-13

◆ Radiated Emissions 30MHz - 1GHz Applicable

Test Conditions / Data and Plots 12-13

Appendix A. The Photos of Test Setup 14-16

B. The Photos of Equipment Under Test 17-18

Note:

INFORMATIONS OF TEST LABORATORY

EMC LABORATORY of IST Co., Ltd. ***(FCC Filing Lab.)***
San 21-8, Goan-Ri, Baekam-Myun, Yongin-City
Kyonggi-Do, 449-860, Korea
TEL : +82 31 333 4093 FAX : +82 31 333 4094

ENVIRONMENTAL CONDITIONS

Temperature	28.0 ℃
Humidity	45 %
Atmospheric pressure	1012 mbar

POWER SUPPLY SYSTEM USED

Power supply system	AC 120Vac, 60Hz (Refer to the product information)

PRODUCT INFORMATION

The Equipment Under Test(EUT) is Powerline Ethernet Adapter of KIT Co., LTD. (FCC ID : TCDPE-14)

Power Source	100-240 Vac, 50/60 Hz
Protocol	TCP/IP
Media Interface	RJ-45 for Ethernet
Network Data Rate	Up to 14 Mbps
Security	56-bit DES Encryption
Dimensions (D x W x H)	98.9 x 67.0 x 30.0 mm

- EMC suppression device is not used during the test.
- Please refer to user's manual.

DESCRIPTIONS OF TEST

Conducted Emissions:

The measurement were performed over the frequency range of 0.15MHz to 30MHz using a 50Ω/50uH LISN as the input transducer to a Spectrum Analyzer or a Field Intensity Meter. The measurements were made with the detector set for "Peak" amplitude within a bandwidth of 10KHz or for "quasi-peak" & "Average" within a bandwidth of 9KHz.

-Procedure of Test

The line-conducted facility is located inside a shielded room No.1. A 1m X 1.5m wooden table 80cm height is placed 40cm away from the vertical wall and 1.5m away from the other wall of the shielded room. The R/S 3725/2 and Hyup-Rip KNW-407 LISN are bonded to bottom of the shielded room. The EUT is located on the wooden table with distance more than 80cm from the LISN and powered from the LISN .The peripheral equipment is powered from the other LISN. Power to the LISNs are filtered by a noise cut power line filters. All electrical cables are shielded by braided tinned steel tubing with inner ϕ 1.2cm. If the EUT is a DC-powered device, power will be derived from the source power supply it normally will be powered from and this supply lines will be connected to the EMCO LISN. All interconnecting cables more than 1m were shortened by non-inductive bundling to a 1m length. Sufficient time for the EUT, support equipment, and test equipment was allowed in order for them to warm up to their normal operating conditions. The RF output of the LISN was connected to the R/S receiver to determine the frequency producing the maximum emission from the EUT. The frequency producing the maximum level was reexamined using Quasi-Peak mode by manual measurement, after scanned by automatic Peak mode for frequency range from 0.15 to 30MHz. The bandwidth of the receiver was set to 10kHz. The EUT, peripheral equipment, and interconnecting cables were arranged and manipulated to maximize each EME emission.

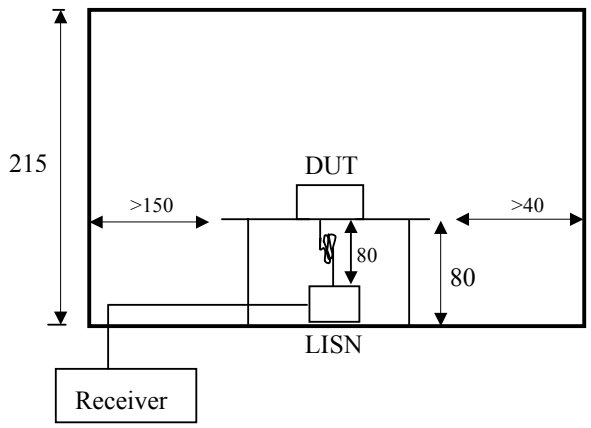

< Side View >

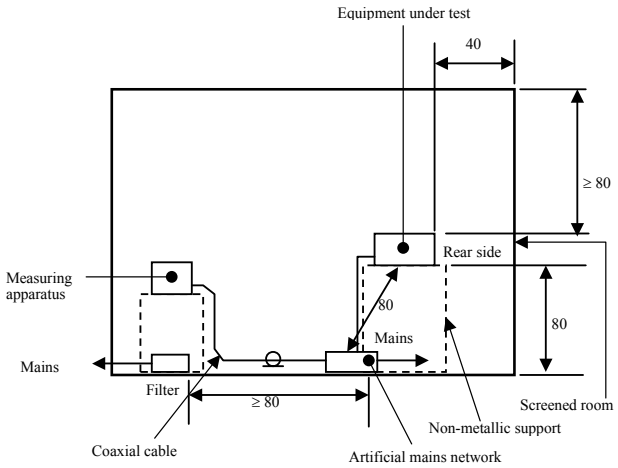

< Concept Drawing >

DESCRIPTION OF TEST

Radiated Emissions:

The measurement was performed over the frequency range of 30MHz to 1GHz using antenna as the input transducer to a Spectrum analyzer or a Field Intensity Meter. The measurement was made with the detector set for "quasi-peak" within a bandwidth of 120KHz.

-Procedure of Test

Preliminary measurements were made at 3 meter using bi-conical and log-periodic antennas, and spectrum analyzer to determine the frequency producing the max. emission in anechoic chamber. Appropriate precaution was taken to ensure that all emission from the EUT were maximized and investigated. The system configuration, mode of operation, turn-table azimuth and height with respect to the antenna were noted for each frequency found. The spectrum was scanned from 30MHz to 1000MHz using S/B LogBicon antenna VL9160. Under 30MHz, magnetic loop antenna were used. Final measurements were made at open site with 3-meters test distance using the same antenna. The OATS have been verified in regular for its normalized site attenuation. The test equipment was placed on a wooden table. Sufficient time for the EUT, peripheral equipment, and test equipment was allowed in order for them to warm up to their normal operating condition. Each frequency found during pre-scan measurements was re-examined by manual. The detector function was set to CISPR quasi-peak mode and the bandwidth of the receiver was set to 120kHz or 1MHz depending on the frequency of type of signal. The EUT, peripheral equipment and interconnecting cables were re-configured to the set-up producing the max. emission for the frequency and were placed on top of a 0.8-meter high nonmetallic 1 x 1.5 meter table. The EUT, peripheral equipment, and interconnecting cables were re-arranged and manipulated to maximize each emission. The turntable containing the system was rotated; the antenna height was varied 1 to 4 meters and stopped at the azimuth or height producing the maximum emission. Each emission was maximized by: varying the mode of operation to the EUT and/or peripheral equipment and changing the polarity of the antenna, whichever determined the worst-case emission.

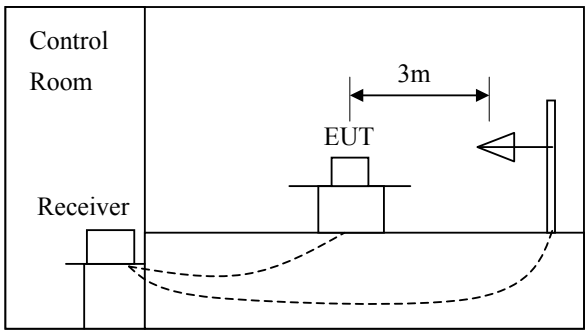

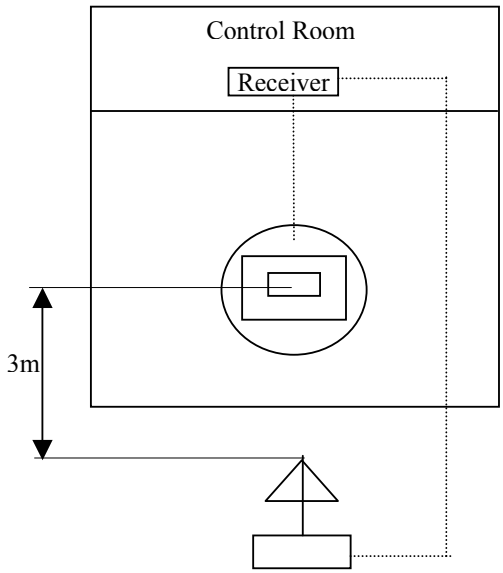

Equipment Under Test

EUT Type :

■ Table-Top. ☐ Floor-Standing.

☐ Table-Top and Floor-Standing(Combination).

Operation – mode of the E.U.T. :

The equipment under test was operated during the measurement under following conditions :

☐ Standby Mode

■ Operational Condition : Communication network monitoring mode (PING test)

Configuration of the equipment under test :

Following peripheral devices and interface cables were connected during the measurement :

Equipment	Type	Brand	Serial No.	FCC Compliance Info.
PC	dx6120 MT	HP	CNG52000QL	DoC
Keyboard(PS/2)	SDL4000	HP	355630-KD1	DoC
Mouse(USB)	M-UV69a	HP	323617-001	DoC
Printer	A0302380	Northern Telecom	2516S60951	BS46XU225C-L
Serial Mouse	M-M28	Logitech	LCA53305547	DZL210365
Laptop	Libretto 30CTK	COMOS	PA1236C9K	N/A
Powerline Ethernet Adapter	PE-14	KIT	N/A	Under Applied

Connecting Interface Cables :
- Unshielded AC power cable : 1.8 m
- Shielded monitor's signal cable (with two ferrite core) : 1.7 m
- Shielded Printer's signal cable (with one ferrite core) : 1.8 m
- Unshielded AC extension cable : 0.8 m
- Unshielded LAN (RJ-45) cable (between EUT and PC) : 1.2 m
- Unshielded Keyboard's signal cable (without ferrite core) : 1.8 m
- Unshielded Mouse's signal cable (without ferrite core) : 1.8 m

Note :

Test Set-Up

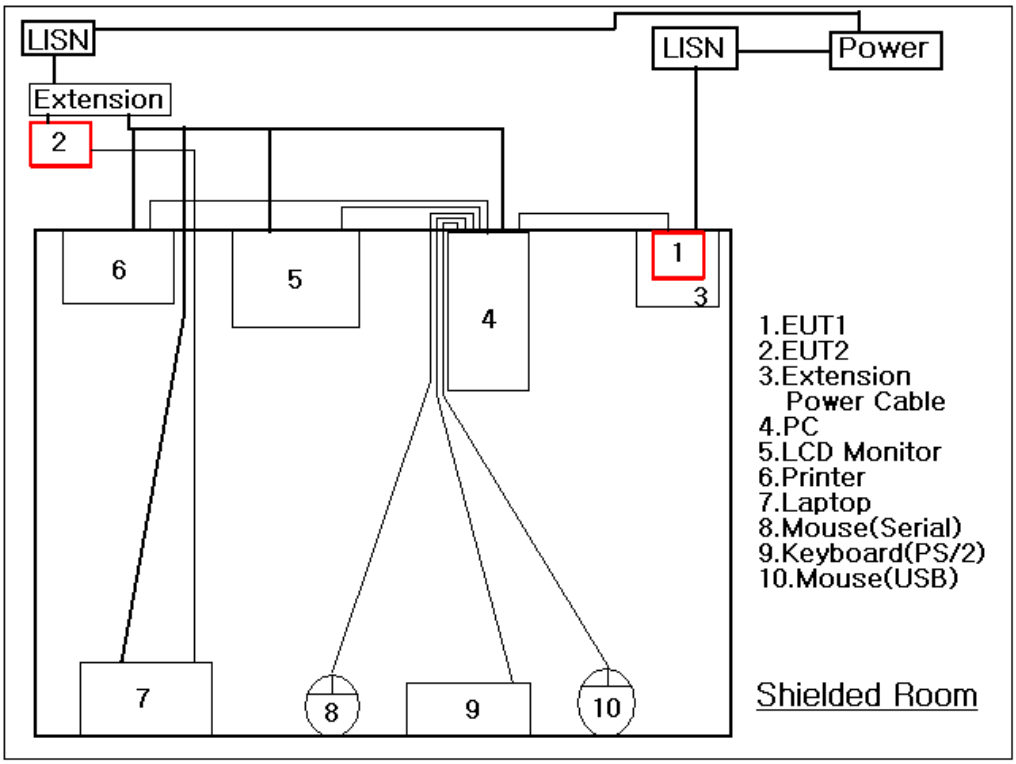

Conducted Emissions

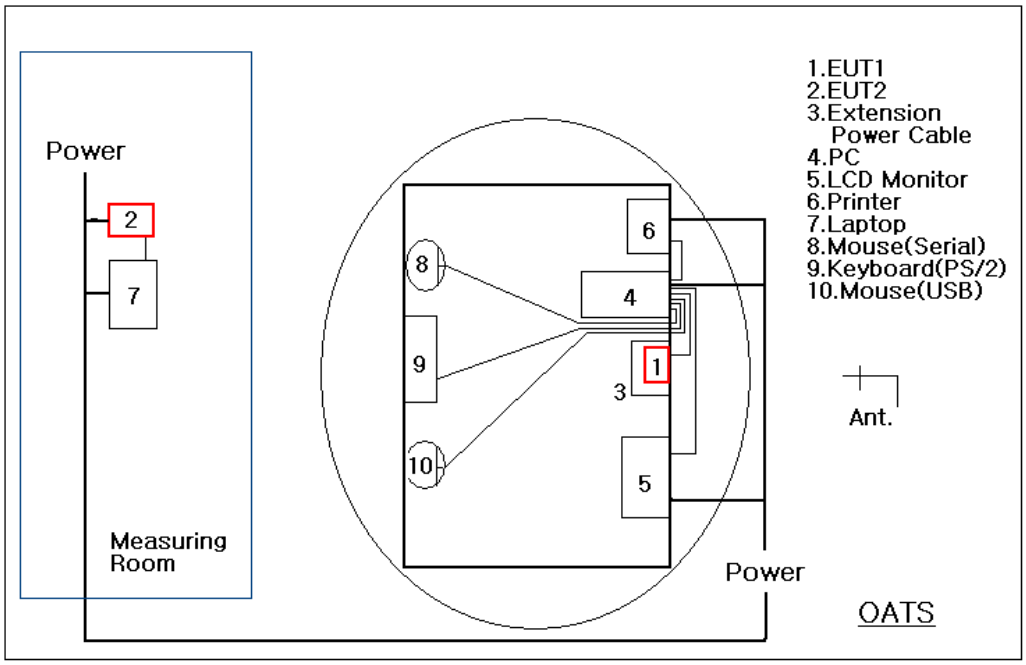

Radiated Emissions

SUMMARY

Emissions

■ Conducted Emission

Test Rule Part 15.107(c)

The requirements are ● MET ○ Not MET

Minimum limit margin 26.8 dB at 0.664 MHz

Maximum limit exceeding

Remarks : Limits are kept with more 3dB margin.

Find the test data in following pages 9 to 10.

■ Radiated Emission

Test Rule Part 15.109(a)(e)

The requirements are ● MET ○ Not MET

Minimum limit margin 3.2 dB at 300.0 MHz

Maximum limit exceeding

Remarks : Limits are kept with more 3dB margin.

Find the test data in following page 12.

test Date

Begin of testing : June 13, 2005

End of testing : June 15, 2005

Note :

Prepared By

S.G.Kim / Senior Engineer

- ■ means the test is applicable,
- □ is not applicable.

TEST CONDITIONS AND DATA

Conducted Emissions

[Applicable]

◆ Test Equipment Used

Model Name	Description	Manufacture	Calibration Date	Serial Number
ESH 3	Test Receiver	Rohde & Schwarz	Jul. 15, 2004	892108/018
3725/2	LISN	Rohde & Schwarz	Jul. 15, 2004	9101-2068
KNW-407	LISN	Hyup-Rip	Jul. 15, 2004	8-833-10
ESH 3-Z2	Pulse limiter	Rohde & Schwarz	Jul. 15, 2004	357.8810.52

◆ Test Accessories Used

Type	Manufacturer
Aneroid Barometer	Sato
Hygrometer	Sato

◆ Test Program Communication network monitoring mode (PING test)

◆ Test Date June 13, 2005

◆ Test Area Shielded Room No.1 (for Conducted Emission test)

Note : The equipment used is calibrated in regular for every year.

Conducted Emissions

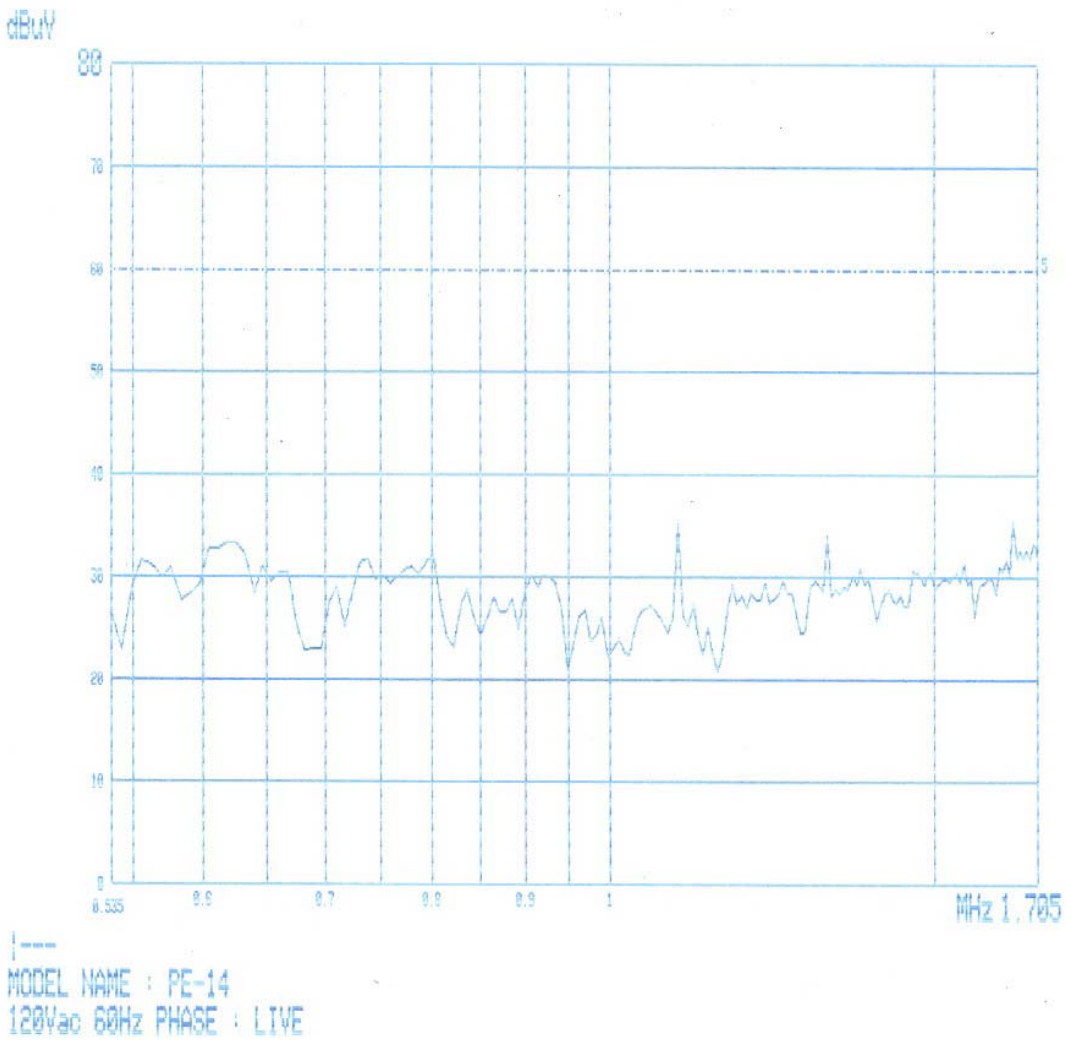

Freq. [MHz]	Measurement [dB μV]		Limit [dB μV]		Insertion Loss	Cable Loss	Result [dB μV]		Margin [dB]	
	Q-peak	Average	Q-peak	Average	[dB]	[dB μV]	Q-peak	Average	Q-peak	Average
0.619	30.3	-	60.0	-	0.3	0.4	31.0	-	29.0	-
0.799	29.0	-	60.0	-	0.3	0.4	29.7	-	30.3	-
0.934	25.4	-	60.0	-	0.3	0.4	26.1	-	33.9	-
1.108	24.6	-	60.0	-	0.3	0.5	25.4	-	34.6	-
1.341	27.2	-	60.0	-	0.3	0.5	28.0	-	32.0	-
1.704	31.3	-	60.0	-	0.3	0.5	32.1	-	27.9	-

Note :

Conducted Emissions

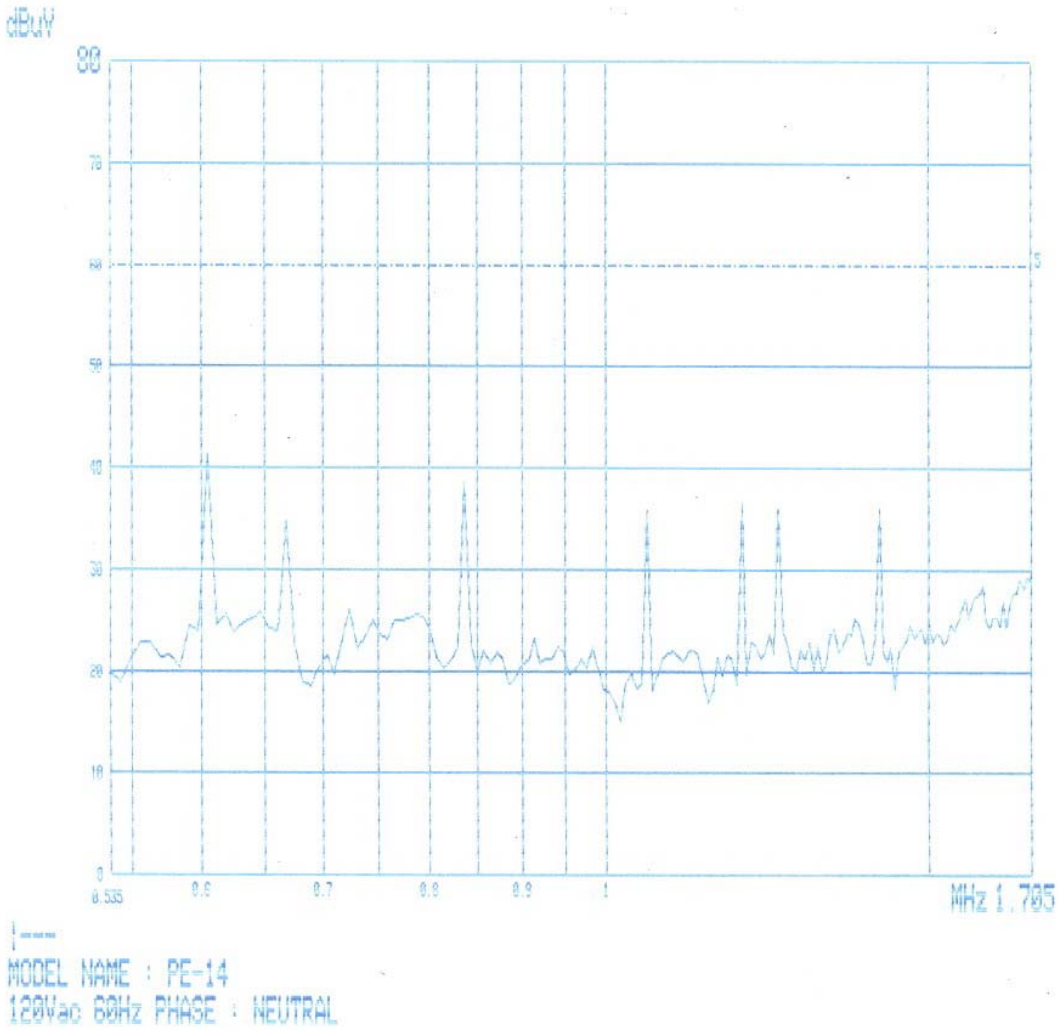

Freq. [MHz]	Measurement [dB μV]		Limit [dB μV]		Insertion Loss	Cable Loss	Result [dB μV]		Margin [dB]	
	Q-peak	Average	Q-peak	Average	[dB]	[dB μV]	Q-peak	Average	Q-peak	Average
0.605	27.6	-	60.0	-	0.3	0.4	28.3	-	31.7	-
0.664	32.5	-	60.0	-	0.3	0.4	33.2	-	26.8	-
0.833	30.6	-	60.0	-	0.3	0.4	31.3	-	28.7	-
1.088	31.2	-	60.0	-	0.3	0.5	32.0	-	28.0	-
1.245	29.4	-	60.0	-	0.3	0.5	30.2	-	29.8	-
1.415	28.8	-	60.0	-	0.3	0.5	29.6	-	30.4	-

Note :

TEST CONDITIONS AND DATA

Radiated Emission

[Applicable]

◆ Test Equipment Used

Name	Type	Manufacturer	Calibration Date	Serial Number
ESCS30	Test Receiver	Rohde & Schwarz	Aug. 18, 2004	100171
VULB 9160	LogBicon Ant.	Schwarzbeck	Jul. 10, 2004	3047
HFH2-Z2	Magnetic Loop Ant.	Rohde & Schwarz	Aug. 18, 2004	335.4711.52
5906	Ant. Turn Table Controller	Tokin	N/A	927221
5907	Ant. Turn Table Driver	Tokin	N/A	917221
HFU-Z	Tripod	Rohde & Schwarz	N/A	110.1114.02

◆ Test Accessories Used

Type	Manufacturer
Aneroid Barometer	Sato
Hygrometer	Sato

◆ Test Program Communication network monitoring mode (PING test)

◆ Test Date June 14, 2005

◆ Test Area Open Area Test Site No.2

Note : The equipment used is calibrated in regular for every year.

Radiated Emissions

Mode	Freq. [MHz]	Reading [dBuV]	Antenna Factor [dB/m]	Cable Loss [dB]	Polar. [H/V]	Result [dBuV/m]	Limit [dBuV/m]	Margin [dB]
PING test	6.2	18.2	20.0	0.6	V	38.8	49.5	10.7
	8.1	17.7	20.0	0.6	V	38.3	49.5	11.2
	9.4	19.5	20.0	0.6	V	40.1	49.5	9.4
	12.5	22.1	20.0	0.6	V	42.7	49.5	6.8
	15.9	19.0	20.0	0.7	V	39.7	49.5	9.8
	17.8	20.3	20.0	0.7	V	41.0	49.5	8.5
	25.0	22.6	20.0	0.7	V	43.3	49.5	6.2
	50.0	20.7	12.1	1.6	V	34.4	40.0	5.6
	75.0	20.0	8.8	1.9	V	30.7	40.0	9.3
	150.0	13.8	12.9	2.9	V	29.6	43.5	13.9
	200.0	16.8	9.2	3.3	V	29.3	43.5	14.2
	250.0	25.9	11.0	3.9	V	40.8	46.0	5.2
	300.0	25.9	12.5	4.4	H	42.8	46.0	3.2
	350.0	23.6	13.8	4.8	V	42.2	46.0	3.8
	400.0	22.5	14.5	5.2	V	42.2	46.0	3.8
	450.0	20.0	16.1	5.6	V	41.7	46.0	4.3
	500.0	19.5	16.9	6.0	V	42.4	46.0	3.6
	600.0	16.8	18.8	6.7	V	42.3	46.0	3.7
	700.0	15.0	20.3	7.3	H	42.6	46.0	3.4
	800.0	11.7	22.5	8.1	H	42.3	46.0	3.7

Note :

- *The measurement was performed for the frequency range 9 kHz ~ 30 MHz according to the section 15.109(e) requirement.*
- *The loop antenna was positioned with its plane vertical at 3 m fro the EUT and rotated about its vertical axis for maximum emission at each azimuth about the EUT.*
- *The above table shows the highest levels of radiated emissions on both polarization of horizontal and vertical.*

Appendix A. The Photos of Test Setup

Conducted Emissions - Front View

Conducted Emissions - Rear View

Appendix A. The Photos of Test Setup

Radiated Emissions (30MHz-1GHz) - Front View

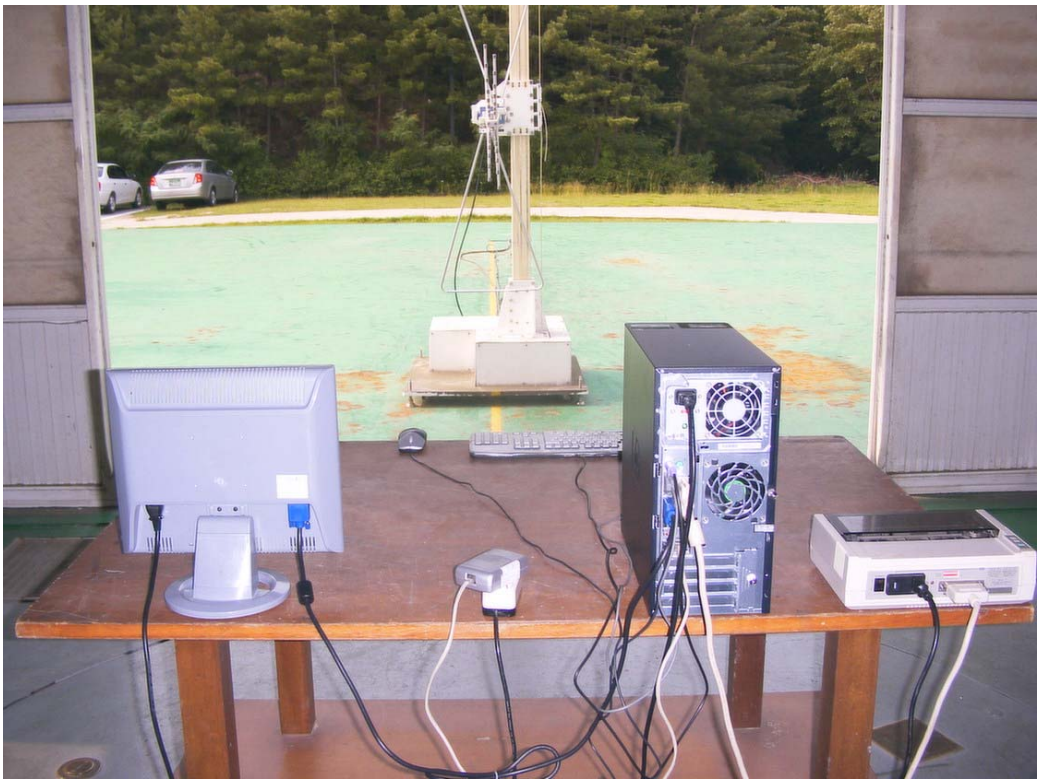

Radiated Emissions (30MHz-1GHz) - Rear View

Appendix A. The Photos of Test Setup

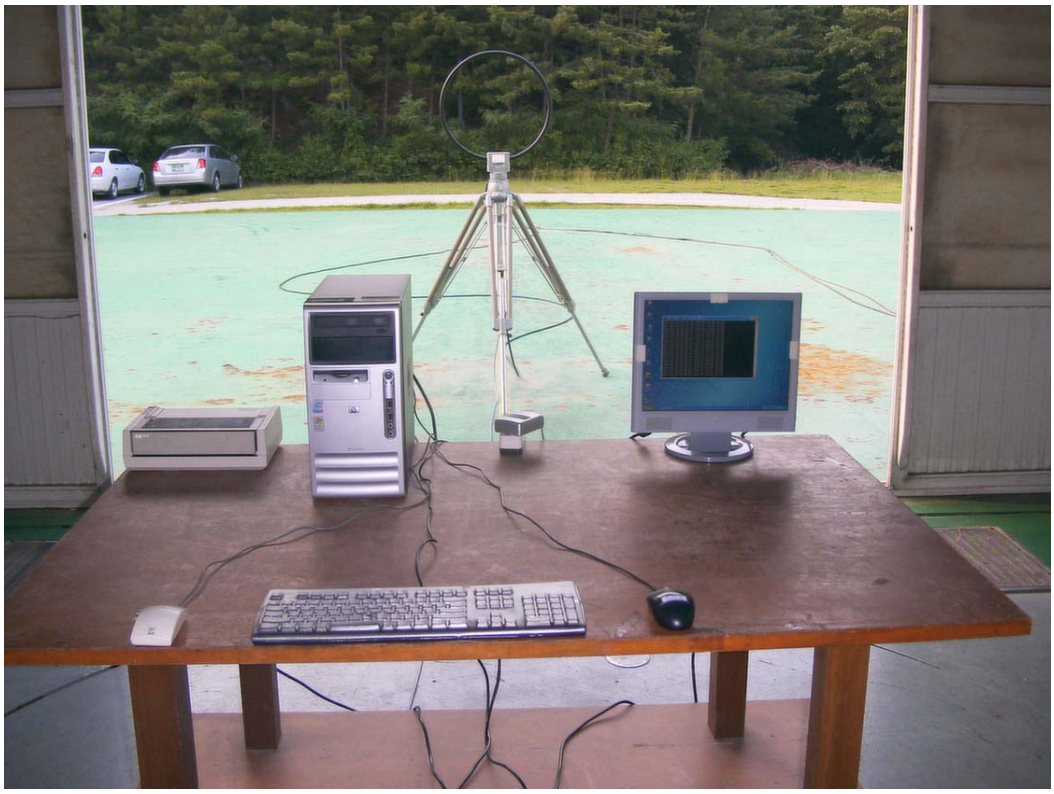

Radiated Emissions (9kHz-30MHz) - Front View

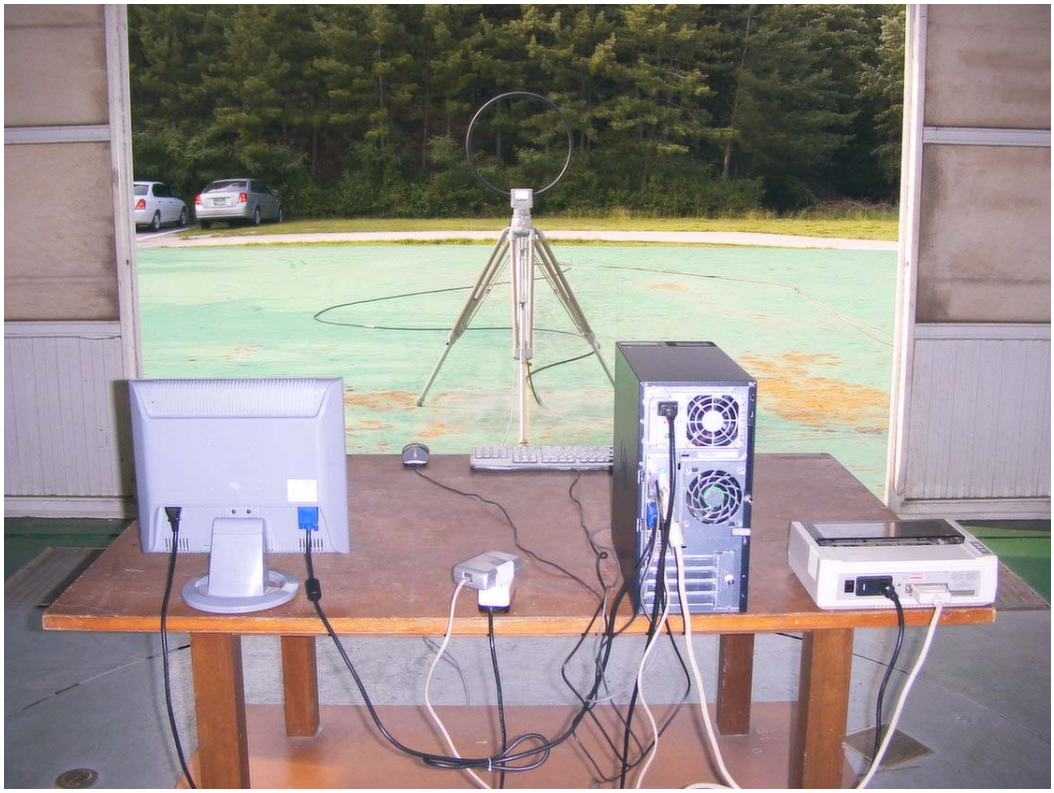

Radiated Emissions (9kHz-30MHz)- Rear View

Appendix B. The Photos of EUT

Front View

Rear View

Appendix B. The Photos of EUT

Interface Port (Ethernet)

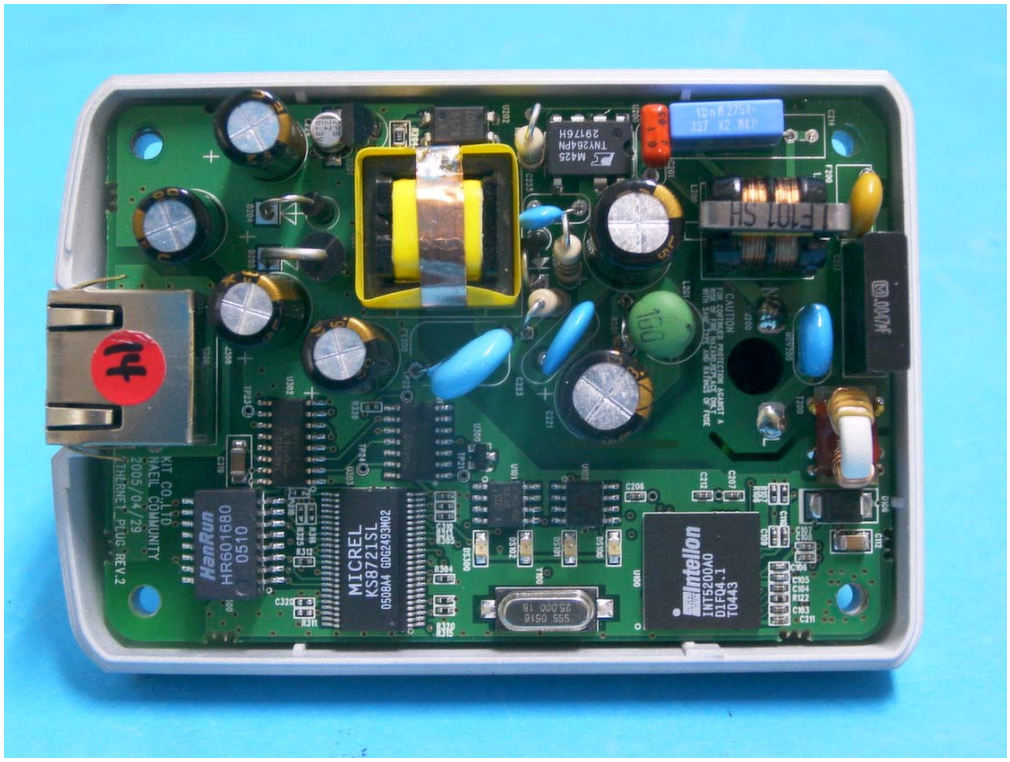

Inner View