3.2 Technical data

Feature	Value
Power supply	2 x 1.5 V AAA micro batteries (LR03) alkaline Type EN92 Energizer (Häfele Cat. No.: 910.54.986)
Ambient temperature	0–55°C
Relative humidity	10–95% not condensed
Degree of protection	IP20
Transponder technology	Tag-It, Mifare Classic EV1, Mifare DESFire EV1EV2. The transponders used for Dialock software applications must be qualified and encoded by Häfele.
Approvals	CE, FCC / IC

Accessories

Feature	Description
Programming key card	• Card for granting access authorisations
Clearing key card	• Card for clearing access authorisations
User key	• Electronic key • Different designs are possible: key card, key tag, key fob, key wristband
Macros	• On request

3.3 Functions

Latchbolt lock operation / self-locking action (= factory setting)

In latchbolt lock operation, the furniture lock is unlocked during the open time of 3 seconds and locks again automatically once the open time has elapsed (self-locking action).

Deadbolt lock operation (permanent open)

In deadbolt lock operation, the furniture lock is permanently unlocked (permanent open). The furniture lock is locked by presenting one of the user keys that is authorised for deadbolt lock operation again.

3.4 Factory settings

Parameter	Value
Open time (duration of unlocking period in latchbolt lock operation) • The open time can be set to up to 30 seconds at one second intervals in stand-alone operation ⇨*8.3 Adjusting the open time, page 44*. • The open time can be extended to beyond 30 seconds using a macro with the MDU 110 mobile programming unit with special functions.	3 seconds
Lock type	Latchbolt lock operation

4. Mounting and installation

The installation instructions for the product can be found in a separate document. They can be accessed via the QR code on the enclosed information sheet or under the respective catalogue number at www.hafele.com.

Please pay attention to the following points when installing the product:

The environmental conditions in the place of installation – for example, magnetic fields or metal materials – may impair the functionality of the product.

- Ensure that the product is installed in a suitable location.
- Observe the maximum material thickness of the installation surfaces to ensure the reading range of the transponders ⇨ EFL 30 / EFL 30 C .
- Avoid glass, mirrors or metallic/coated installation surfaces.
- Set up a sample installation in the chosen location and test it out prior to carrying out the final installation.

Do not insert the batteries once the assembly and installation work is complete. This step should not be completed before commissioning the product. The drawers may need to be removed again for drawer assembly.

- Once the batteries have been inserted, the product commissioning process launches automatically.
- Read chapter ⇨ *5. Commissioning, page 33* before inserting the batteries for the first time.

4.1 Installation references

- Ensure that the EFL 30 / EFL 30 C is not installed next to power lines. The magnetic field of the power lines can impair the antenna range.
- Recommendation: carry out a trial mounting attempt before installing the EFL 30 / EFL 30 C.
- Do not mount the locking component of the EFL 30 / EFL 30 C until it is in the place of installation.
- Only adjust the EFL 30 / EFL 30 C at the installation location and readjust if necessary after loading the furniture item.
- Ensure that there are no metal panels mounted between the locking component and the EFL 30 / EFL 30 C.
- The locking component of the EFL 30 / EFL 30 C can be screwed on with a furniture handle (hole spacing 32 mm) on the opposite side.
- The EFL 30 / EFL 30 C is particularly suitable for furniture constructions with soft closing and self closing mechanisms.
- The EFL 30 / EFL 30 C is not suitable for drawers and hinged doors with a Push-to-Open function.
- During installation, ensure there is an inspection opening available in case emergency opening is required.
- During installation, note that access to the installed furniture lock must be guaranteed at all times (e.g. by means of detachable drawers) for commissioning (visual signalling) and maintenance purposes (battery change, reset).
- The control LEDs must be visible for commissioning.
- Observe the installation position: ⇨ EFL 30 / EFL 30 C .

- Observe the minimum distance between two locks ⇨ EFL 30 / EFL 30 C .
- If the distance is less than the minimum distance, continuous communication will take place between the locks, which will drain the battery.

5. Commissioning

The product is supplied in so-called simple operation mode for stand-alone operation (SA). This document describes the commissioning process for stand-alone operation only.

Commissioning details for using the product with Dialock software applications can be found in the Dialock software documentation.

The commissioning process begins automatically once the batteries have been inserted. The individual steps must be carried out immediately and in sequence. For safety reasons, the initial commissioning can only take place within 5 seconds after the batteries were inserted.

- Read through the steps carefully before commissioning.
- Ensure both master keys (the “green” programming key card and “red” clearing key card) are to hand before commissioning.
- Perform the work operations quickly and without interruptions.

If the commissioning time window is exceeded:

1. Remove the batteries.
2. Wait until the LED goes out.
3. Re-insert the batteries and restart the commissioning process.

Alternatively, commissioning can also take place by pressing the Reset button (⇨ *3.1 Product overview, page 30*).

1. Press and hold down the reset button only until the first, short acoustic signal. **ATTENTION!** If the button is pressed for longer, a reset will take place (⇨ *10. Reset, page 45*).

Recommendation: carry out a firmware update with the MDU 110 mobile programming unit before starting up in order to ensure that the most up-to-date DIALOCK firmware is on the terminal.

NOTE

Product damaged caused by closing the EFL 30 / EFL 30 C without batteries.

If the EFL 30 / EFL 30C is closed without batteries after commissioning, it can no longer be opened without force.

5.1 Commissioning app (Häfele Dialock Manager)

Additional functions are available when using the Dialock Manager app (app mode in the offline system):

- Commissioning in app mode
- 2-factor authentication for added security
- Simple user management
- Setting up a locking map
- Individual management of access authorisations
- Time model function
- Programming user keys
- Configuring terminals
- Individual extension of functions with macro programs
- Firmware updates

Depending on the size of the project and the scope of the system, there are various basic and additional functions that can be activated using a project license key that is subject to a fee.

Further information on how to use the Dialock Manager app is available at:

- https://apps.apple.com/de/developer/h%C3%A4fele-gmbh-co-kg/id432533773
- https://play.google.com/store/apps/developer?id=H%C3%A4fele+GmbH+%26+Co+KG&hl=de

> i Stand-alone operation will be permanently shut off once the product is put into operation for the first time using the Häfele Dialock Manager.
> After that, reactivating this operation mode is only possible after a complete reset.

Prerequisites: Programming key card Clearing key card

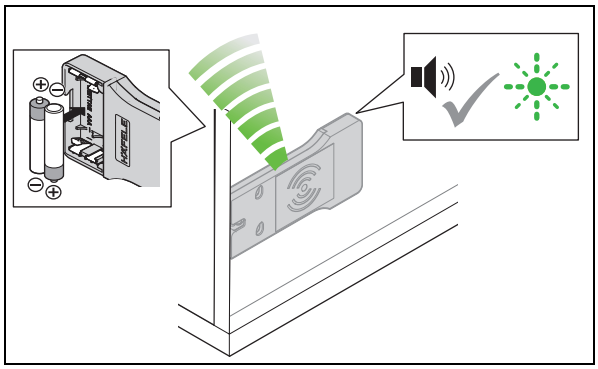

1. Insert batteries.
   - Acoustic signal is heard. LED flashes green for max. 5 seconds.

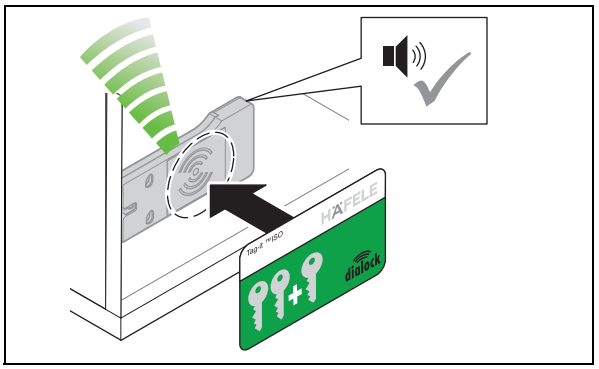

2. Hold the programming key card in front of the antenna during this 5-second period.
   - Acoustic signal is heard.

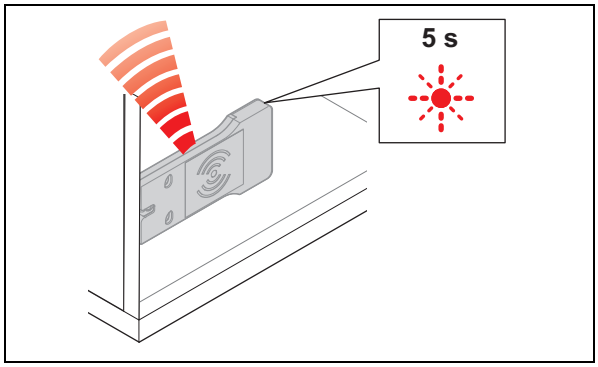

3. Remove programming key card.
   - LED flashes red for max. 5 seconds.

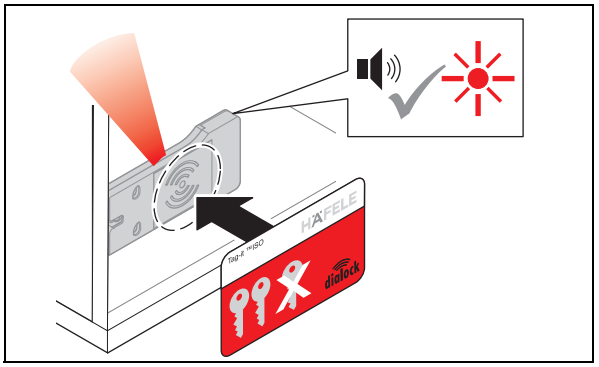

4. Hold the clearing key card in front of the antenna during this 5-second period.
   - Acoustic signal is heard. LED illuminates red. Product is in operation.

6. Programming user keys

A user key is needed to open the EFL 30 / EFL 30 C. Locking authorisation must be allocated to this user key.

The following user keys can be programmed:

User key	Locking authorisation	Functionality
Normal user key	Latchbolt lock operation (with self-locking action)	• Opens all locks for which the user key has locking authorisation. • Open locks then lock automatically once the open time has elapsed.
Privileged user key	Latchbolt lock operation (with self-locking action)	• Functions like a normal user key • Also required by privileged persons for configuring the EFL 30 / EFL 30 C with the MDU 110 mobile programming unit.
User key with deadbolt lock function	Deadbolt lock operation (permanent open)	• Functions like a normal user key • Also has a permanent open function: If the user key is held in front of the antenna for a longer period, the open locks are set to “permanent open”. • Open locks have to be manually locked.

6.1 Programming a normal user key

Prerequisites: Programming key card User keys

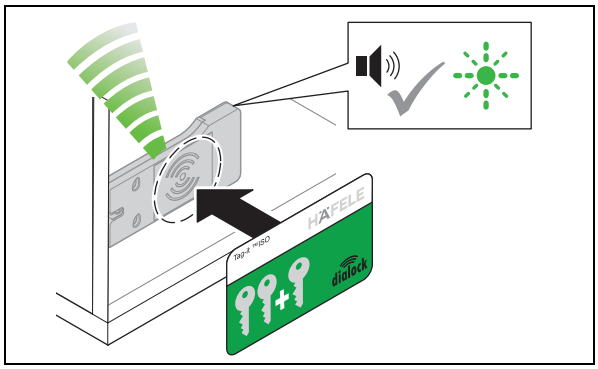

1. Hold the programming key card in front of the antenna.
   - Acoustic signal is heard. LED flashes green for max. 5 seconds.

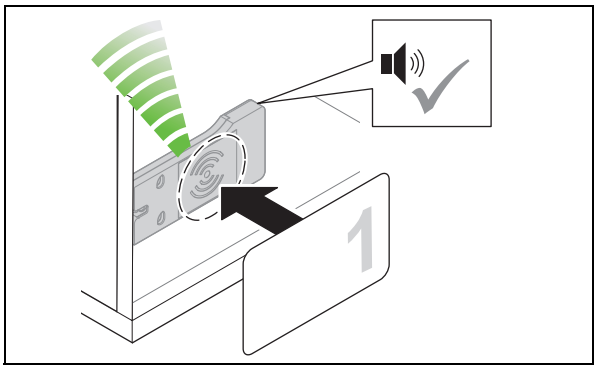

2. Hold the user key in front of the antenna during this 5-second period.
   - Acoustic signal is heard. Locking authorisation is allocated.

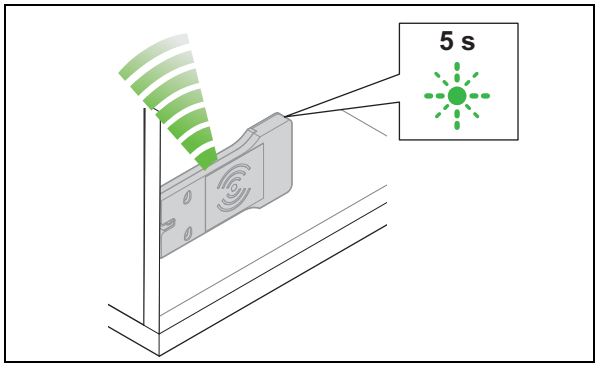

3. Remove user key.
   - LED flashes green for a further 5 seconds.

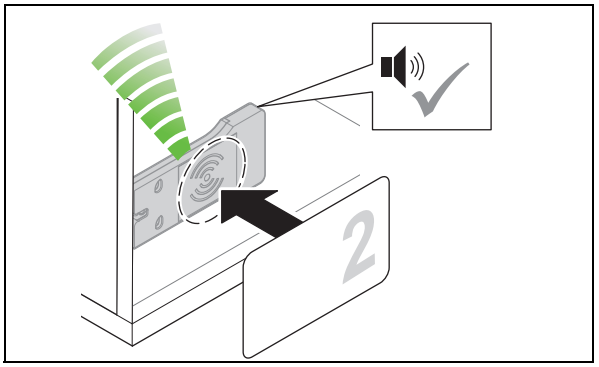

4. Hold another user key in front of the antenna during this 5-second period.
   - Acoustic signal is heard. Locking authorisation is allocated.

5. Repeat steps 2 to 4 until all necessary user keys have been granted the locking authorisation.

6. The LED switches to red once the 5 seconds have elapsed.

6.2 Programming a privileged user key

Prerequisites: Programming key card User keys

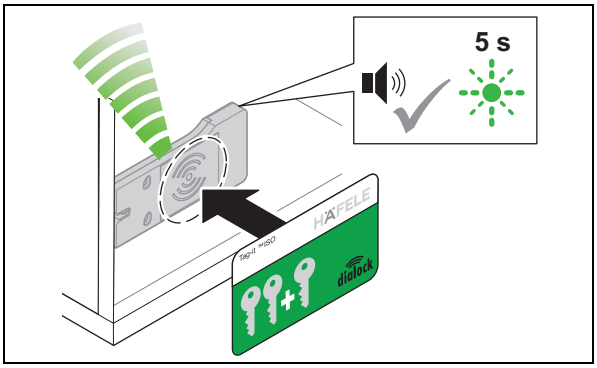

1. Hold the programming key card in front of the antenna.
   - Acoustic signal is heard. LED flashes green for max. 5 seconds.

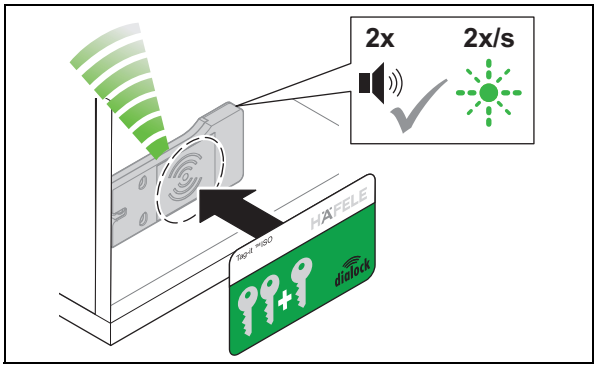

2. Hold the programming key card in front of the antenna again during this 5-second period.
   - Acoustic signal is heard twice. LED flashes green more slowly.

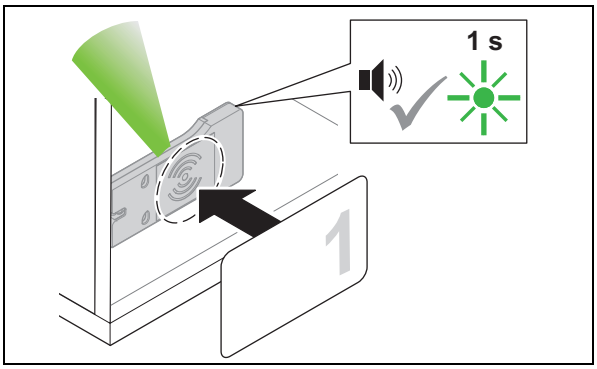

3. Hold the user key in front of the antenna during the 5-second period.
   - Acoustic signal is heard. LED briefly illuminates green. Locking authorisation is allocated.

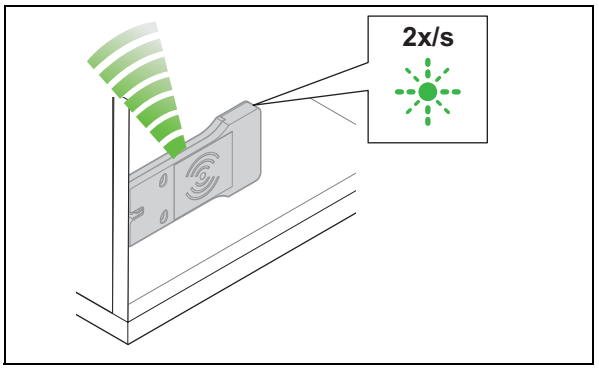

4. Remove user key.
   - LED continues to flash green slowly.

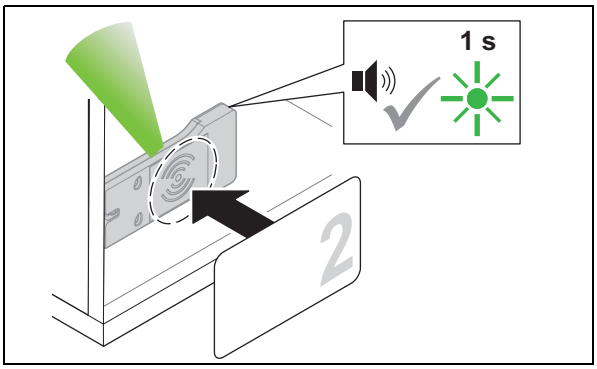

5. Hold another user key in front of the antenna during the 5-second period.
   - Acoustic signal is heard. LED briefly illuminates green. Locking authorisation is allocated.

6. Repeat steps 3 to 5 until all necessary user keys have been granted the locking authorisation.

7. The LED switches to red once the 5 seconds have elapsed.

6.3 Programming a user key with deadbolt lock function

Prerequisites: Programming key card User keys

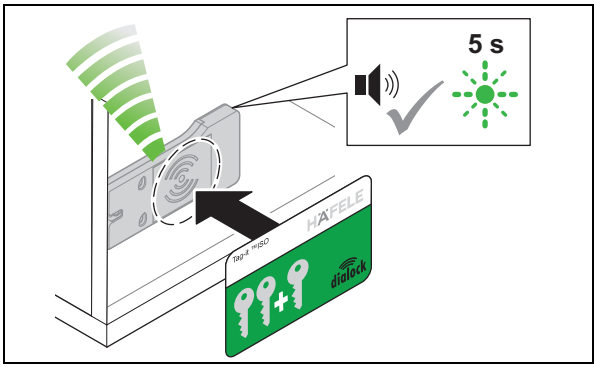

1. Hold the programming key card in front of the antenna.
   - Acoustic signal is heard. LED flashes green for max. 5 seconds.

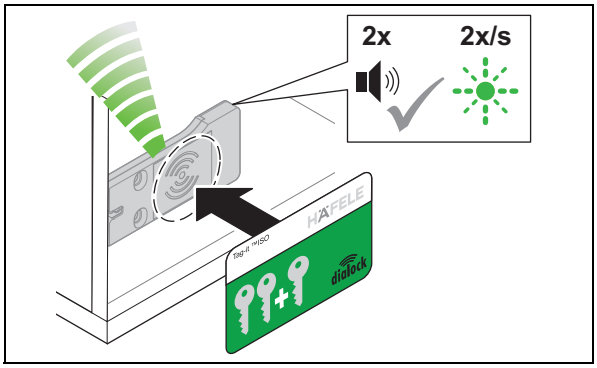

2. Hold the programming key card in front of the antenna again during this 5-second period.
   - Acoustic signal is heard twice. LED flashes green more slowly.

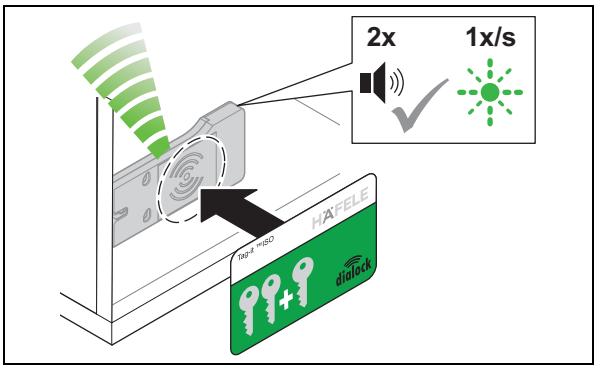

3. Hold the programming key card in front of the antenna again during the 5-second period.
   - Acoustic signal is heard twice. LED flashes green even more slowly.

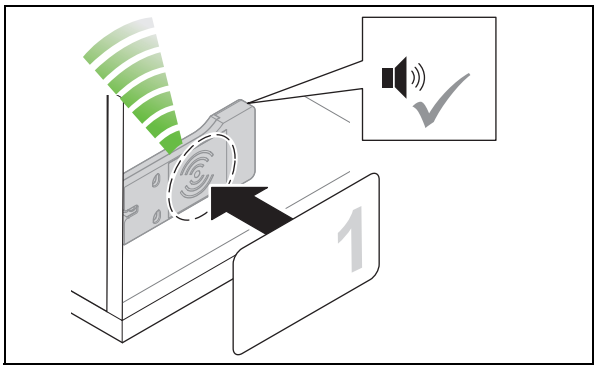

4. Hold the user key in front of the antenna during the 5-second period.
   - Acoustic signal is heard. Locking authorisation is allocated.

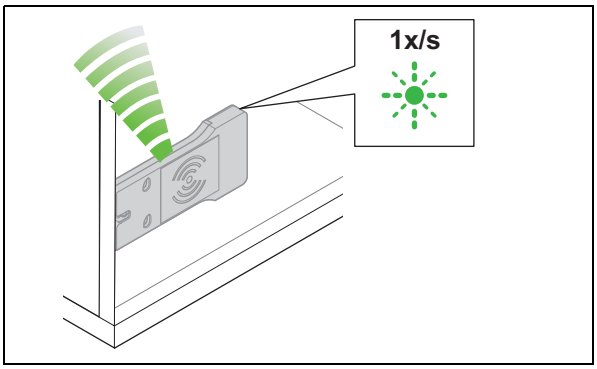

5. Remove user key.
   - LED continues to flash green slowly.

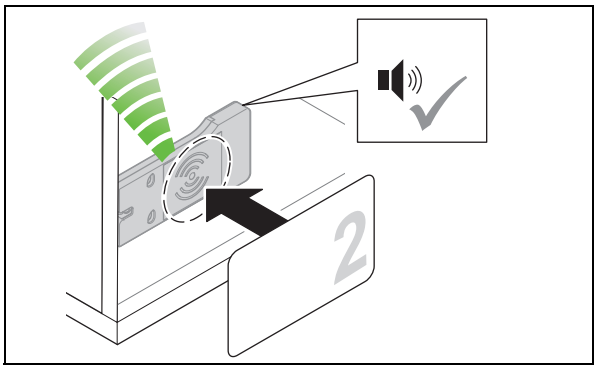

6. Hold another user key in front of the antenna during the 5-second period.
   - Acoustic signal is heard. Locking authorisation is allocated.

7. Repeat steps 4 to 6 until all necessary user keys have been granted the locking authorisation.

8. The LED switches to red once the 5 seconds have elapsed.

7. Clearing locking authorisations

7.1 Erasing the locking authorisation of an individual user key

Prerequisites:		Clearing key card		User key with locking authorisation to be cleared

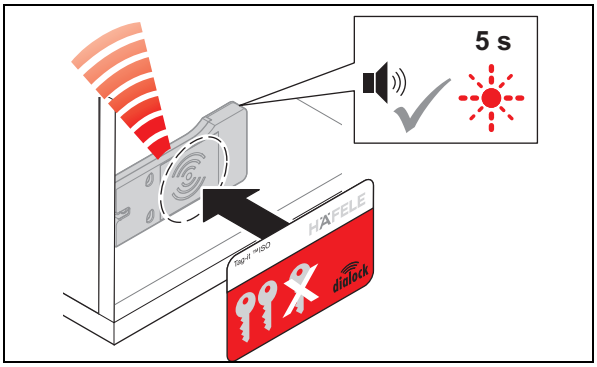

1. Hold the clearing key card in front of the antenna.
   - Acoustic signal is heard. LED flashes red for max. 5 seconds.

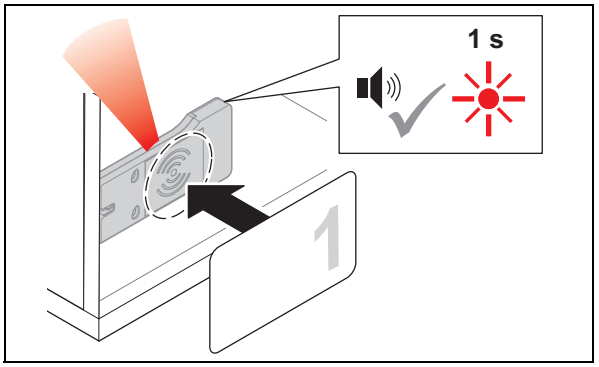

2. Hold the user key in front of the antenna during this 5-second period.
   - Acoustic signal is heard. LED briefly illuminates red. Locking authorisation of this user key is cleared.

7.2 Clearing locking authorisations for all user keys

If a user key is lost, the locking authorisations of all user keys must be cleared. The locking authorisations can then be granted again ⇨ *6. Programming user keys, page 36*.

Prerequisites: Clearing key card Programming key card

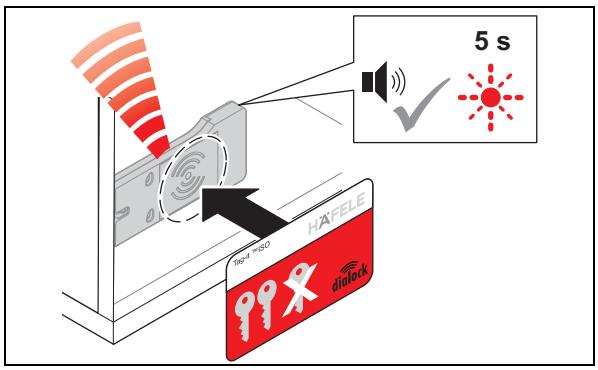

1. Hold the clearing key card in front of the antenna.
   - Acoustic signal is heard. LED flashes red for max. 5 seconds.

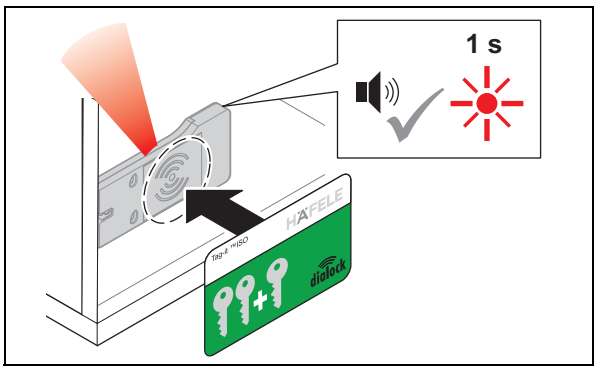

2. Hold the programming key card in front of the antenna during the 5-second period.
   - Acoustic signal is heard. LED briefly illuminates red.
     The locking authorisations of all user keys are cleared.

8. Operation

8.1 Operation with a normal user key

Prerequisites:		Normal user key with “latchbolt lock operation” locking authorisation (self-locking action)

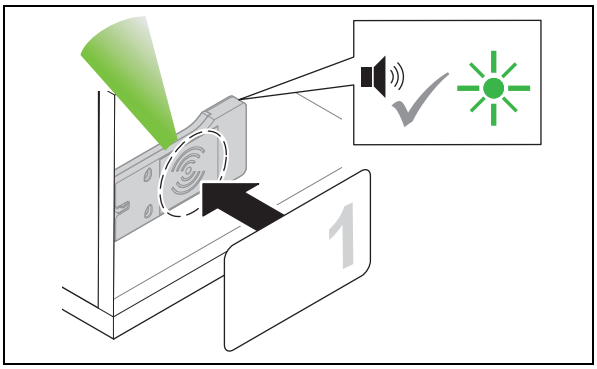

1. Hold the user key in front of the antenna.
   - Acoustic signal is heard. LED switches to green.

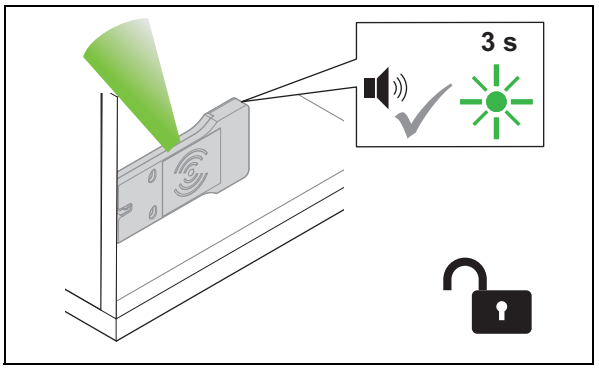

2. Remove user key.
   - LED illuminates green. All locks are open during the open time.

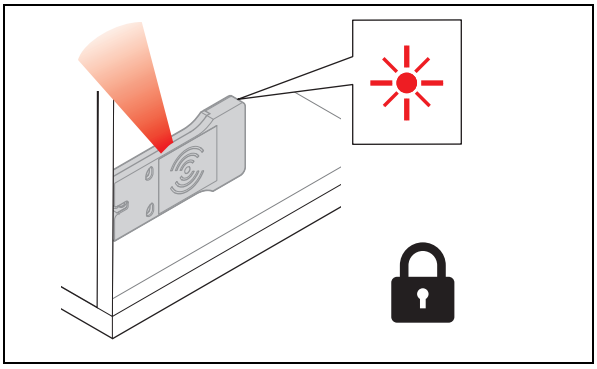

3. The locks lock automatically once the open time has elapsed.
   - LED switches to red.

8.2 Operation with user key with deadbolt lock function

Prerequisites:		User key with deadbolt lock function (permanent open)

A user key with the deadbolt lock function also has the “latchbolt lock operation” locking authorisation (self-locking action) ⇨ *8.1 Operation with a normal user key, page 42*

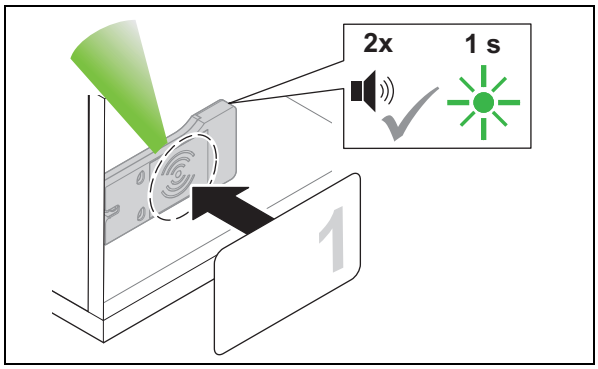

1. Hold the user key in front of the antenna for at least 2 seconds.
   - Acoustic signal is heard. LED switches to green. Acoustic signal is heard again. LED briefly illuminates green.

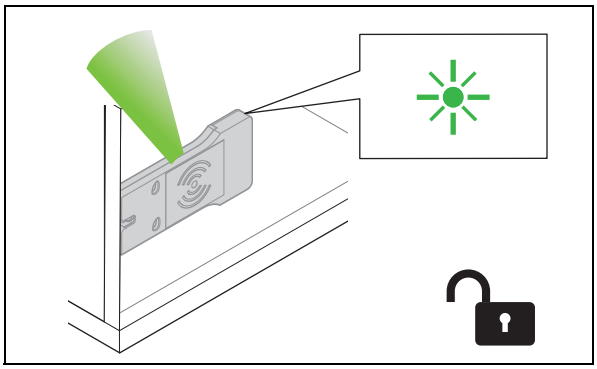

2. Remove user key.
   - LED illuminates green permanently. All locks are permanently open (“permanent open”).

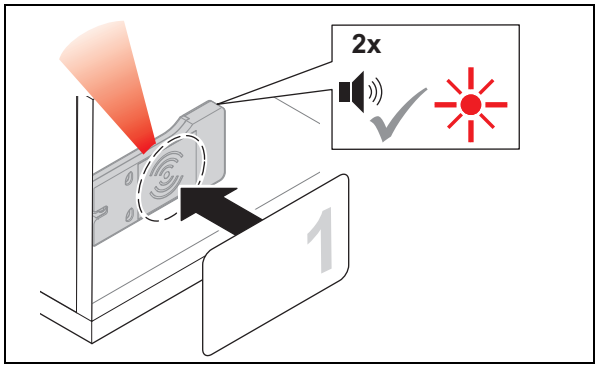

3. Hold the user key in front of the antenna for at least 2 seconds to close.
   - Acoustic signal is heard. LED continues to illuminate green. Acoustic signal is heard again. LED switches to red.

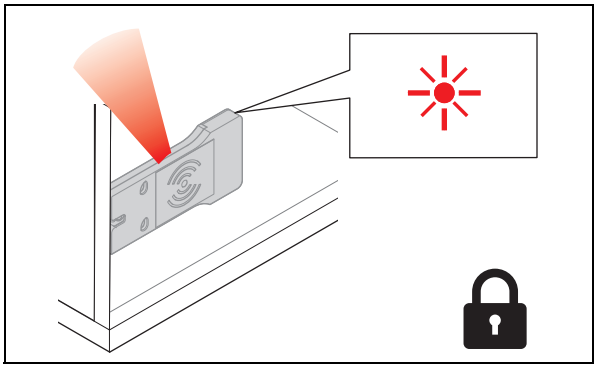

4. Remove user key.
   - LED illuminates red permanently. All locks are locked.

8.3 Adjusting the open time

Prerequisites: Programming key card Clearing key card

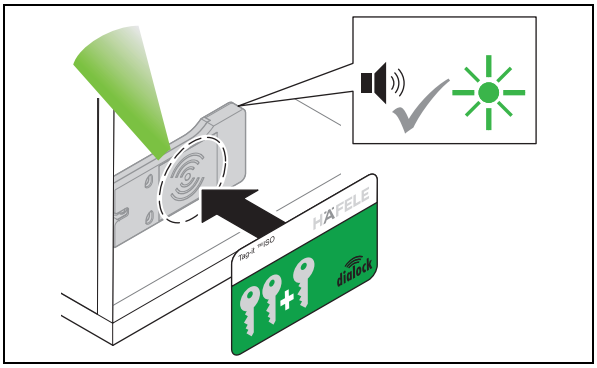

1. Hold the programming key card in front of the antenna.
   - Acoustic signal is heard. LED illuminates green.

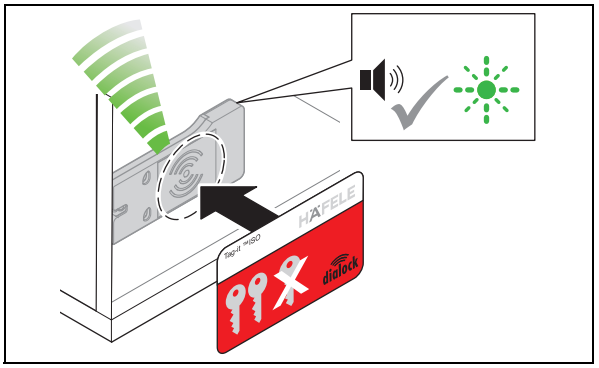

2. Hold the clearing key card in front of the antenna.
   - Acoustic signal is heard. The LED flashes quickly in green.

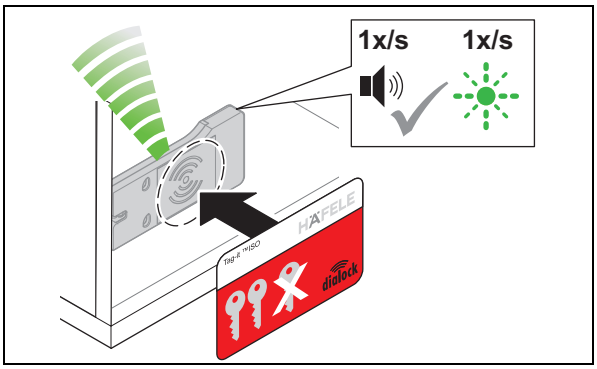

3. Hold the clearing key card in front of the antenna again.
   - An acoustic signal is heard at one second intervals.
   - The LED flashes green in parallel to the acoustic signal every second (max. 30 seconds).

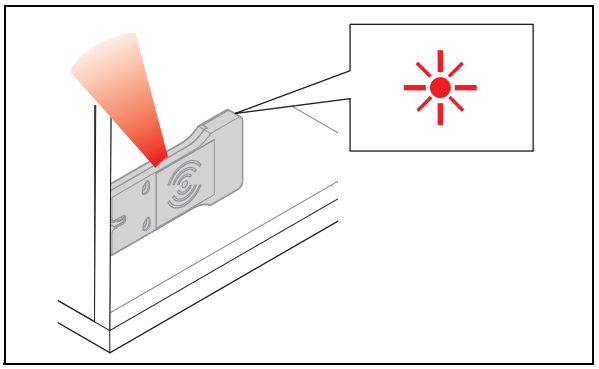

4. Remove clearing key card after the required time.
   - The LED illuminates permanently in red.
   - The open time is set for all locks and authorised user keys.

The open time can be adjusted at any time, and is also retained after a power supply interruption or a simple reset.

The open time can be extended to beyond 30 seconds using a macro with the MDU 110 mobile programming unit with special functions (⇨*3.2 Technical data, page 31*).

After a complete reset, the set open time is cleared and the factory setting of 3 seconds or deadbolt lock operation are activated.

9. Troubleshooting

Fault when opening	Possible cause	Remedy
Acoustic signal is heard twice.	• User key is not authorised.	• Program the user key. ⇨ *6. Programming user keys, page 36*
LED does not change from red to green.	• Distance between user key and antenna too great. • User key is not authorised. • User key is not recognised.	• Observe the maximum distance of 25 mm between the user key and antenna. • Program the user key. ⇨ *6. Programming user keys, page 36* • Check lock installation conditions ⇨ *4.1 Installation references, page 32*
Lock does not open.	• User key is not authorised. • Locking mechanism sticks / stiff.	• Program the user key. ⇨ *6. Programming user keys, page 36* • Lock is under tension. Check loading of furniture item. • Adjust locking mechanism. Note adjustments and tolerances! ⇨ *4.1 Installation references, page 32*
Fault when locking	**Possible cause**	**Remedy**
Lock does not close.	• Lowering of locking mechanism after loading the furniture item. • Closing mechanism defective. • Batteries dead	• Adjust locking mechanism. Note adjustments and tolerances! ⇨ *4.1 Installation references, page 32* • Check closing mechanism. • Replace batteries

If the faults cannot be remedied, contact your responsible DIALOCK technician or www.hafele.com.

10. Reset

A reset is required for maintenance purposes or for remedying faults.

There are two reset options:

- Simple reset,
- complete reset.