Table of contents

1. About this document 24
1.1 Target groups of the operating instructions 24
1.2 Other applicable documents 24
2. Safety 24
2.1 Intended use 24
2.2 Improper use 24
2.3 Personnel qualifications 25
2.4 Use of locking authorisations 25
2.5 General safety instructions 26
2.6 Electrical safety 26
3. Structure and function 27
3.1 Product overview 27
3.2 Technical data 27
3.3 Accessories 28
4. Functions 29
5. Mounting and installation 29
5.1 Installation description for LL 300 29
5.2 Installation references 29
6. Commissioning 30
7. Programming the user key 32
7.1 Programming a normal user key 32
7.2 Clearing the locking authorisation of an individual user key 33
7.3 Clearing locking authorisations for all user keys 33
8. Operation 34
8.1 "Lock" operation 34
8.2 "Open" operation 35
9. Troubleshooting 35
10. Reset 35
10.1 Simple reset 36
10.2 Complete reset 37

732.22.151

HDE 14.11.2023

11. Cleaning and maintenance 38
11.1 Cleaning 38
11.2 Maintenance 38
11.3 Changing the batteries 38
12. Storage 39
13. Disposal 40
14. EU Declaration of Conformity 40
15. UKCA Declaration of Conformity 40
16. ANATEL Declaration of Conformity 40
17. Approval in accordance with Part 15 of the FCC regulations 41

732.22.151

HDE 14.11.2023

1. About this document

These operating instructions are valid for the battery-operated, electromechanical locker lock "LL 300". They form part of the product and must be kept until the product is disposed of.

1.1 Target groups of the operating instructions

The target groups of the operating instructions are:
- Operators
- Installation personnel
- Commissioning personnel
- Operating personnel

1.2 Other applicable documents

Document	Contents
Installation instructions	Mechanical installation

All product documentation is available from www.hafele.com.

Products with this marking can be put into operation and managed with the Häfele My Dialock Manager app.

2. Safety

2.1 Intended use

The LL 300 is a battery-operated, electromechanical locker lock for all common locker types (e.g. wardrobe / compartment lockers, lockers). The following list outlines examples of proper use:
- Use on locker doors inside buildings
- Use on locker doors that meet the specified installation requirements (⇨ *LL 300*)
- Use in compliance with the technical data (⇨ *3.2 Technical data, page 27*)

2.2 Improper use

Any use that is not mentioned in chapter *2.1 Intended use* is considered improper.
The following list outlines examples of improper use:
- Use as a locking system for room doors / building entrances
- Outdoor use
- Use in aggressive (e.g. salty) environments
- Use in shipbuilding and vehicle construction
- use in potentially explosive environments
- Use in the vicinity of electromagnetically sensitive devices
- Use in the vicinity of hot surfaces, heat sources, easily flammable materials or areas with direct sunlight
- Omitting components during installation
- Changes to the installation order
- Use of defective or damaged components
- Use of parts other than the original parts
- Modification or repairs to the product / system components
- Use by persons who have not received instructions

2.3 Personnel qualifications

Task	Level of qualification
Transport, storage	Specialists
Installation	Specialists
Installation	Specialists
Commissioning	Specialists
Allocation and deletion of locking authorisations	Operating personnel
Operation	Operating personnel, user (guest)
Fault	Specialists
Reset (via MDU 110)	Specialists
Cleaning	Operating personnel
Disassembly	Specialists
Disposal	Specialists

Specialists

Specialists are:

- Experts in the mounting of electronic access control systems (in furniture construction) with the adequate level of professional training, knowledge and experience to recognise and avoid hazards that may arise in connection with their work and its outcomes.

Operating personnel

Operating personnel are those with locking authorisation. Operating personnel are trained on:

- Safe and proper handling of the product
- Responsible use of locking authorisations

Operating personnel train the user (guest) on the following:

- Opening the door with the user key

2.4 Use of locking authorisations

Any abuse of the keys must be prevented.

The programming and deletion keys must be kept in a safe place, since unauthorised persons can gain access to rooms with both keys.

2.5 General safety instructions

The product has been built in accordance with the latest state of technology and the recognised technical safety regulations. Nevertheless, danger to persons or damage to the product or other property could occur during installation and use.

Warning

Risk due to failures or faults in electromagnetically sensitive devices!

The electromagnetic radiation of the product can cause faults in sensitive parts (e.g. in medical equipment). The functionality thereof will be adversely affected.

- Do not place the product in the immediate vicinity of electromagnetically sensitive devices.
- If you have any doubts regarding compatibility, please contact the manufacturer.

2.6 Electrical safety

- Perform mounting and installation work without batteries.
- Do not carry the product by the cable.
- Check all components for damage prior to assembly and operation. Do not use any damaged components; file a complaint with the manufacturer.
- Do not modify or replace the plug or cable.
- Do not trap, kink or damage the cable. Do not place the cable over sharp edges or corners. Keep the cable a sufficient distance away from movable or rotating parts.
- Do not open the housing of the product components.
- Never immerse the product components in water or other liquids.
- Only use undamaged batteries.
- Replace discharged batteries immediately to avoid battery acid leakage.
- Remove leaking batteries immediately and dispose of them properly in accordance with national regulations. Avoid contact with the battery acid.

3. Structure and function

3.1 Product overview

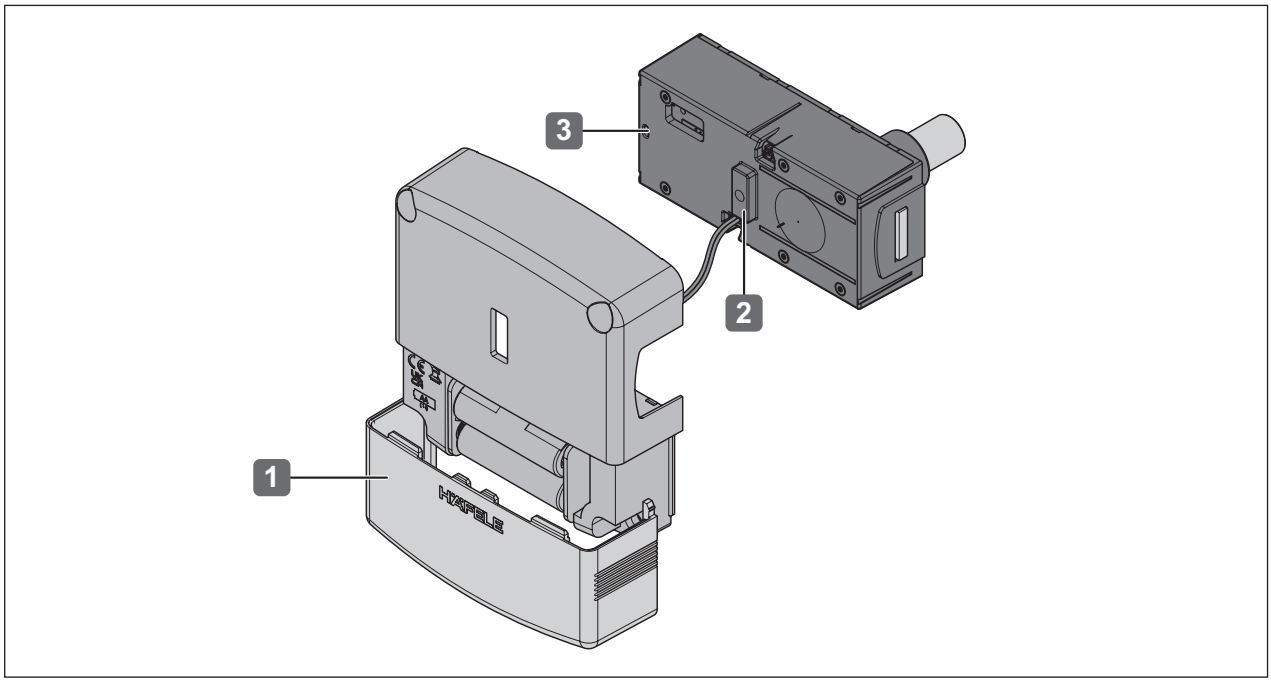

Basic components		Description
1	Battery compartment (power supply)	• ⇨ *3.2 Technical data, page 27*
2	Control LEDs (red and green)	• Visual signalling
3	Reset opening	• ⇨ *10. Reset, page 35*

3.2 Technical data

Feature	Value
Power supply	Tested and recommended by Häfele: 4x 1.5 V Mignon battery AA (LR6) alkaline Type E91 Energizer industrial (Häfele Cat. No.: 910.54.980)
Current consumption max.	0.25 A (5 V)
Power consumption max.	1.25 W
Dimensions* (L x W x D)	118.4 mm x 110 mm x 34.5 mm
Ambient operating temperature	0° C – 55° C
Relative humidity	10% to 95%, not condensed
Degree of protection	IP 42
Transponder technology	ISO15693, ISO14443: Tag-it, MIFARE Classic EV1, MIFARE DESFire EV1/EV2
Low power wireless technology	• Commissioning, configuration and key administration of access points with a smartphone and the Häfele My Dialock Manager app • Opening an access point via low power wireless with a digital end device and a suitable app (e.g. Häfele Access Hotel)
Signalling	1x red LED, 1x green LED, Piezo signal generator

Feature	Value
Approvals	FCC / IC, ANATEL
Tested to	DIN 4547-2 Class C
RFID frequency	13.56 MHz ISO 14443 and ISO 15693; Tag-it, MIFARE Classic EV1, MIFARE DESFire EV1 / EV2
Transmitter field strength / (dbµA/m) @3m	2.47
Low Power Wireless Frequency (BLE / Thread)	2400 MHz – 2483.5 MHz
Radiated power (dBm)	-6.1

3.3 Accessories

Accessoires	
Programming key card	• Card for granting access authorisations
Clearing key card	• Card for clearing access authorisations
User key	• Electronic key • Different designs are possible: key card, key tag, key fob, key wristband
Angled striking plate 239.47.604	• for mounting variant M3
Ferrite foil 231.91.510	• for mounting on metal, glass or plastic
Neutral number plate 231.81.100	• for marking the lockers during installation
Sticker 231.81.200	• brief graphical instructions for operating the locker lock
Add-ons (macros)	• on request

4. Functions

Fixed locker assignment for regular use of a locker by a consistent user.

The user key is taught once by the operating staff and then has the locking authorisations for this locker until they are revoked by the operating staff.

Other operating modes such as "Free locker selection" can be configured with the My Dialock Manager app or when used with Dialock software applications.

For more information on the "free locker selection" function, please contact our Dialock service at www.hafele.com

5. Mounting and installation

The installation instructions for the product can be found in a separate document. They can be accessed via the QR code on the enclosed information sheet or under the respective catalogue number at www.hafele.com.

Please pay attention to the following points when installing the product:

i The environmental conditions in the place of installation – for example, magnetic fields or metal materials – may impair the functionality of the product
- Ensure that the product is installed in a suitable location.
- Observe the maximum material thickness of the installation surfaces to ensure the reading range of the transponders ⇨ *LL 300*
- Glass, mirrors or metallic or metallically coated surfaces only possible in conjunction with the optional ferrite foil ⇨ *LL 300*
- Set up a sample installation in the chosen location and test it out prior to carrying out the final installation.

i Do not insert the batteries once the assembly and installation work is complete.
This step should not be completed before commissioning the product.

Once the batteries have been inserted, the product commissioning process launches automatically.

Read chapter ⇨ *11.3 Changing the batteries, page 38* before inserting the batteries for the first time.

5.1 Installation description for LL 300

The installation process is described entirely with pictures ⇨ *LL 300*.

5.2 Installation references

- Make sure that the LL 300 locker lock is not installed next to power lines. The magnetic field of the power line can affect the range of the antenna.
- Maintain the minimum distance between two locker locks ⇨ *LL 300*.
- If the distance is less than the minimum distance, continuous communication will take place between the locker locks, which will drain the battery.
- After installation, the bolt must move into the recess of the striking plate. If this is not the case, revisit the individual installation steps.
- Recommendation: Do not fit the LL 300 locker lock until it is at the installation site.
- The LEDs must be visible for commissioning.

6. Commissioning

The product is supplied in so-called simple operation mode for stand-alone operation (SA). This document describes the commissioning process for stand-alone operation only.

Stand-alone operation is permanently switched off as soon as the product is configured for the first time using the MDU 110 mobile data transfer unit or the Dialock Manager app. After that, reactivating this operation mode is only possible after a complete reset (⇨ *10.2 Complete reset, page 37)*.

When using the product with Dialock software applications or the Dialock Manager app, the commissioning process is described in the respective instructions.

i The commissioning process begins automatically once the batteries have been inserted. For safety reasons, commissioning can only take place within 5 seconds of the batteries being inserted.
- Read through the steps carefully before commissioning.
- Ensure both master keys (the "green" programming key card and "red" clearing key card) are to hand before commissioning.
- Perform the work operations quickly and without interruptions.

i If the commissioning time window is exceeded:
- Remove the batteries.
- Restart the commissioning process.

i Recommendation: Before commissioning, carry out a firmware update with the My Dialock Manager app or the MDU 110 mobile data transfer unit to ensure that the current Dialock firmware is on the terminal.
To do this, contact our Dialock service at www.hafele.com.

Prerequisites: 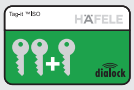 Programming key card Clearing key card

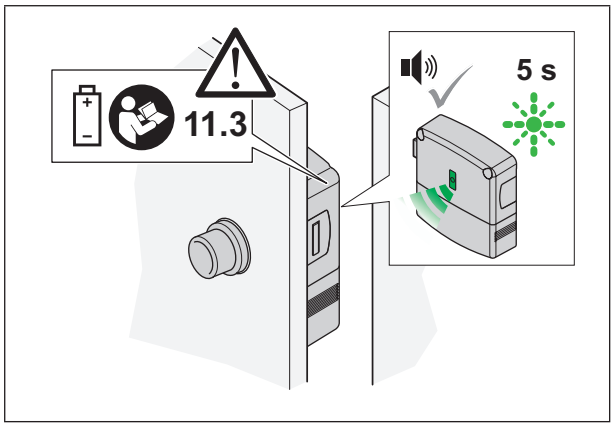

1. Insert batteries.
   ► Acoustic signal is heard. LED flashes green for max. 5 seconds.

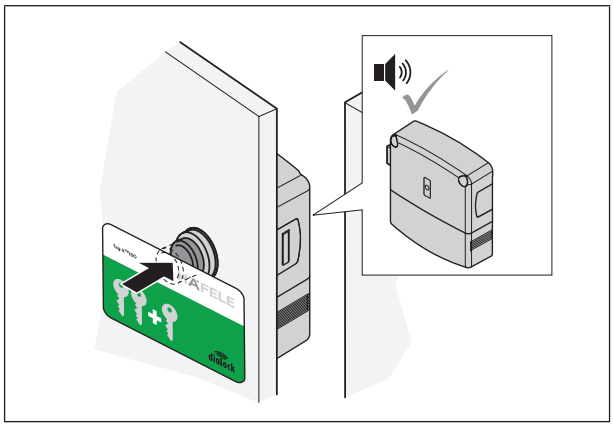

2. Press the push-button with the programming key card within 5 seconds.
   ► Acoustic signal is heard.

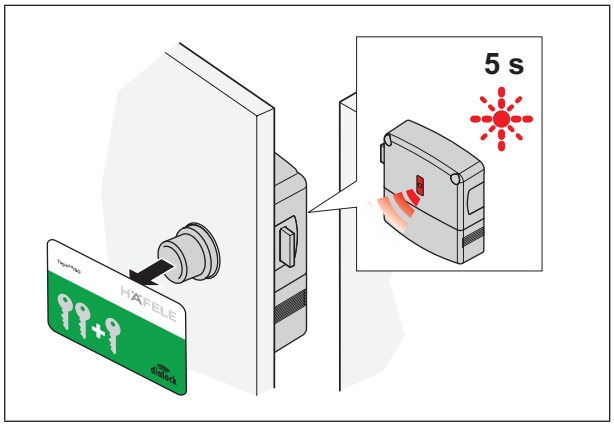

3. Remove programming key card.
   ► LED flashes red for max. 5 seconds.

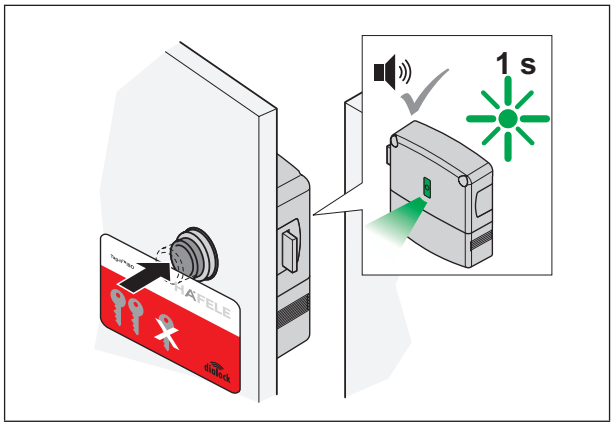

4. Present the clearing key card within this 5-second period.
   ► Acoustic signal is heard. LED briefly illuminates green.
   ► Lock is in operation.

This product can be commissioned and managed with the Häfele Dialock Manager app.

Further information on how to use the Häfele My Dialock Manager app is available at:

iOS (Apple)

Android (Google)

For questions about smartphone applications, contact our Dialock service at www.hafele.com.

7. Programming the user key

An authorised user key is required to lock a locker lock. Locking authorisation must be allocated to this user key.

The following user keys can be programmed:

User key	Locking authorisation	Functionality
Normal user key	Fixed locker assignment	• Opens and closes a permanently assigned locker
Privileged user key	Emergency opening of all lockers for privileged users	• Opens and closes all lockers • can also be used to configure a locker lock in conjunction with the MDU 110.

7.1 Programming a normal user key

Prerequisites: Programming key card User keys

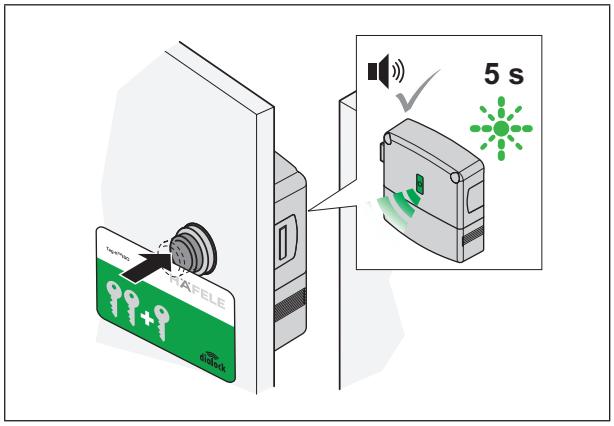

1. Press the push-button with the programming key card.
   ► Acoustic signal is heard.
   ► LED flashes green for max. 5 seconds.

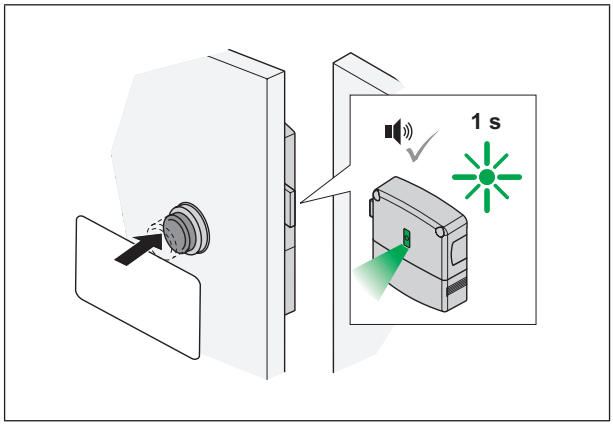

2. Press the push-button with the user keys within 5 seconds.
   ► Acoustic signal is heard. LED briefly illuminates green.
   ► Locking authorisation is allocated.

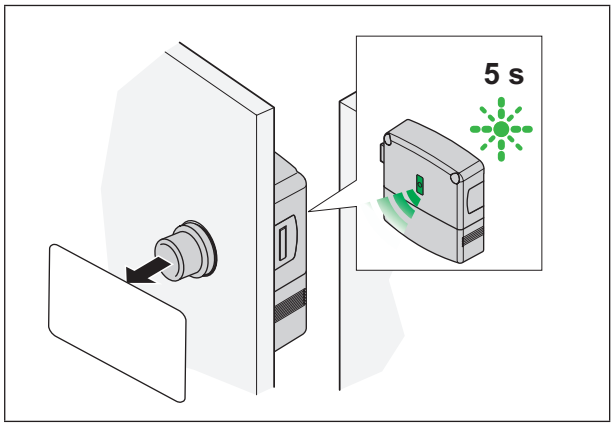

3. Remove user key.
   ► After 5 seconds, the LED goes out.

> i If a "master key" is required for all existing lockers (e.g. for emergency opening if a user key is lost), this user key must be programmed on all lockers.
> To prevent misuse, this "master key" must then be kept in a secure place to which only authorised persons have access.

7.2 Clearing the locking authorisation of an individual user key

Prerequisites: Clearing key card User key with locking authorisation to be cleared

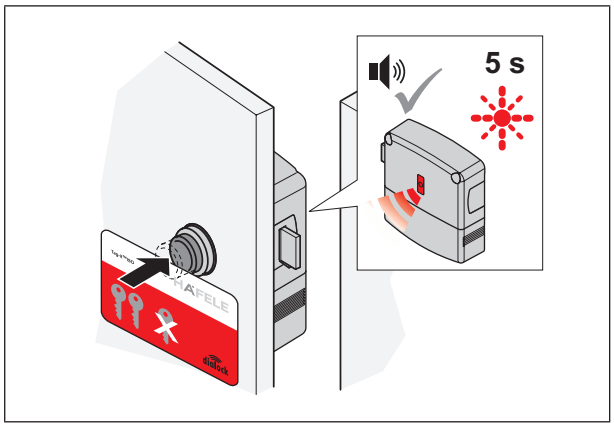

1. Press the push-button with the clearing key card.
   ► Acoustic signal is heard. LED flashes red for max. 5 seconds.

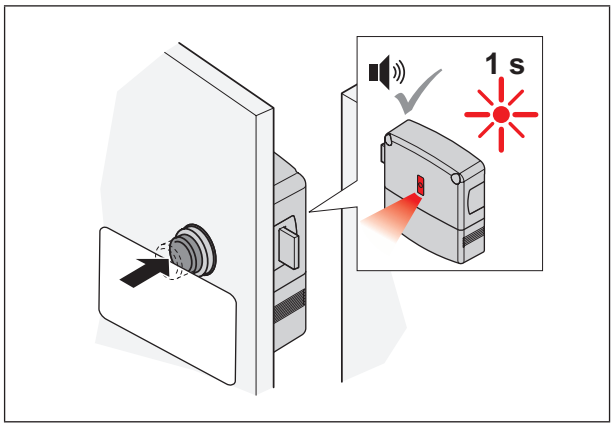

2. Press the push-button with the user key within 5 seconds.
   ► Acoustic signal is heard. LED briefly illuminates red. Locking authorisation of this user key is cleared.

7.3 Clearing locking authorisations for all user keys

If a user key is lost, the locking authorisations of all user keys must be cleared. The locking authorisations are then reassigned ⇨ *Program user key.*

Prerequisites: Clearing key card Programming key card

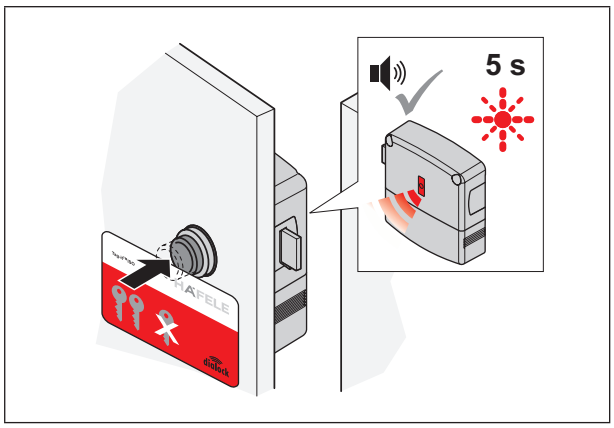

1. Press the push-button with the clearing key card.
   ► Acoustic signal is heard. LED flashes red for max. 5 seconds.

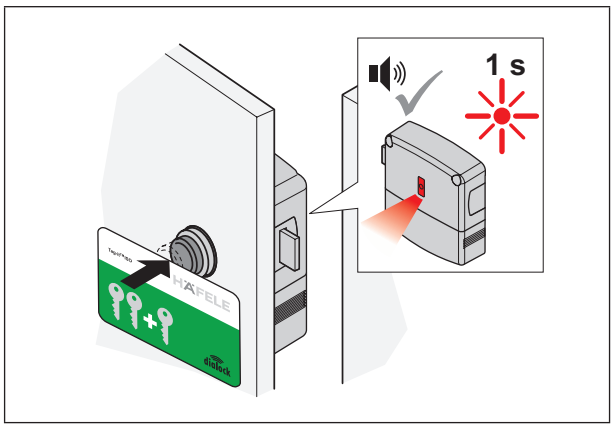

2. Press the push-button with the programming key card within 5 seconds.
   ► Acoustic signal is heard. LED briefly illuminates red.
   ► The locking authorisations of all user keys are cleared.

8. Operation

8.1 "Lock" operation

Prerequisites: User key with locking authorisation

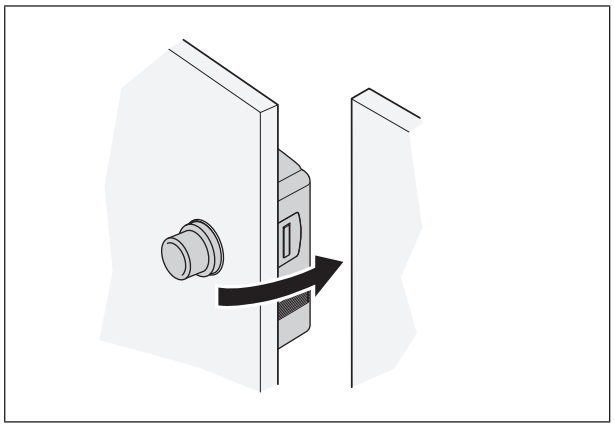

1. Close door.

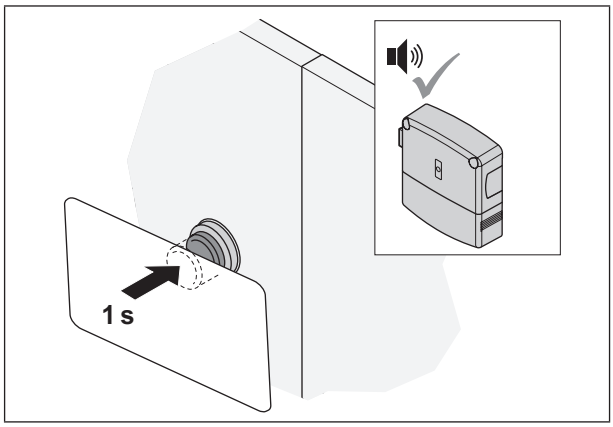

2. Press the push-button with the user key. Hold it down for 1 sec..
   ► Acoustic signal is heard.

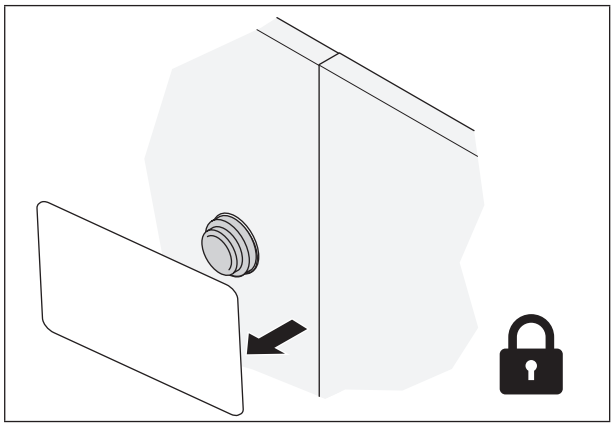

3. Remove user key.
   ► Door is locked.

8.2 "Open" operation

Prerequisites: User key with locking authorisation

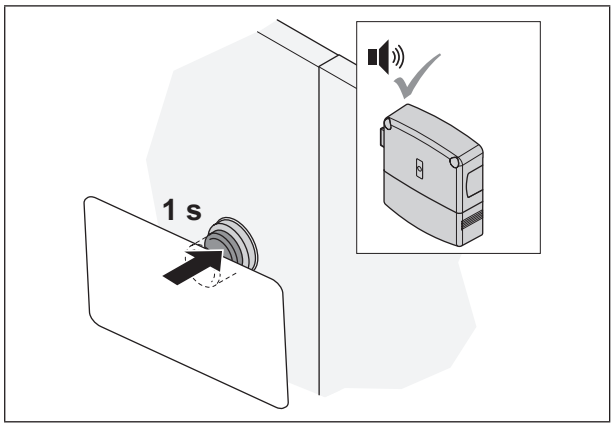

1. Press the push-button with the user key.
   ► Acoustic signal is heard.

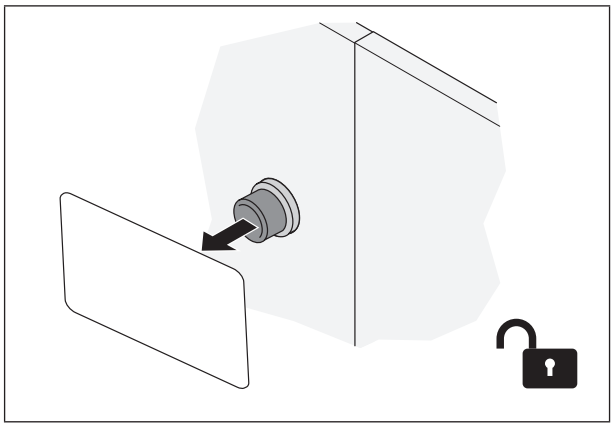

2. Remove user key.
   ► Door is unlocked.

9. Troubleshooting

Fault when locking	Possible cause	Remedy
Acoustic signal is heard twice	• User key is not authorised for locking	• Program the user key. ⇨ *7. Programming the user key, page 32*
Acoustic signal is heard three times. Red and green LEDs on the inside flash alternately three times.	• low batteries	• Replace batteries immediately. ⇨ *11.3 Changing the batteries, page 38*

If the faults cannot be rectified, contact our Dialock service at www.hafele.com.

10. Reset

A reset is required for maintenance purposes or for rectifying faults.

There are two reset options:
- Simple reset,
- complete reset.

The reset process described here can only be carried out in the dismantled state
⇨ *LL 300 "Disassembly"*.

To perform a reset with the My Dialock Manager app or the MDU 110 mobile data transfer unit, contact our Dialock service at www.hafele.com.

10.1 Simple reset

A simple reset is required in the following cases:

- If the programming key card and clearing key card (master keys) have been lost.

After a simple reset, the assigned master keys are cleared and a new assignment is required (LED continuously flashing in green).

Continued use of the terminal is not possible until a restart with new master keys (⇨ *6. Commissioning, page 30).* The locking authorisations for the user keys are retained after a simple reset.

Prerequisites:	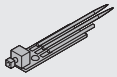	Push-button (910.53.311)

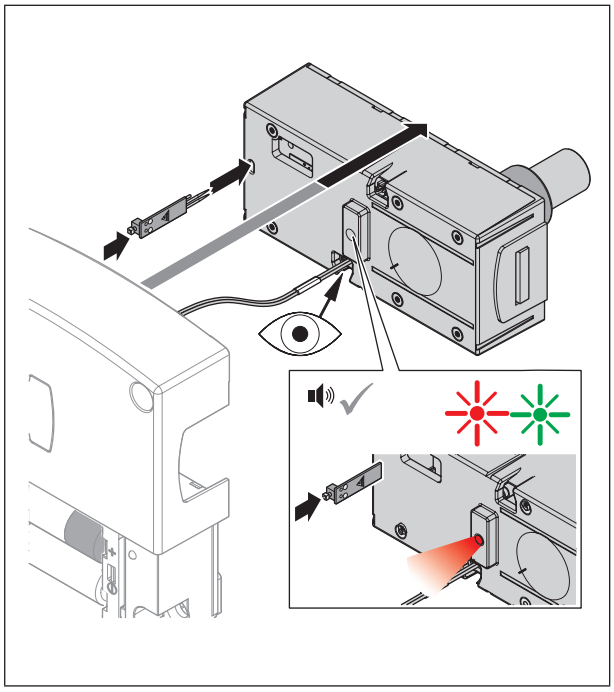

1. Remove the lock case from the installation housing. Place the push-button on the contacts in the lock case.
   ► Press push-button.
   ► The signal tone sounds briefly.
   ► Red and green LEDs illuminate.

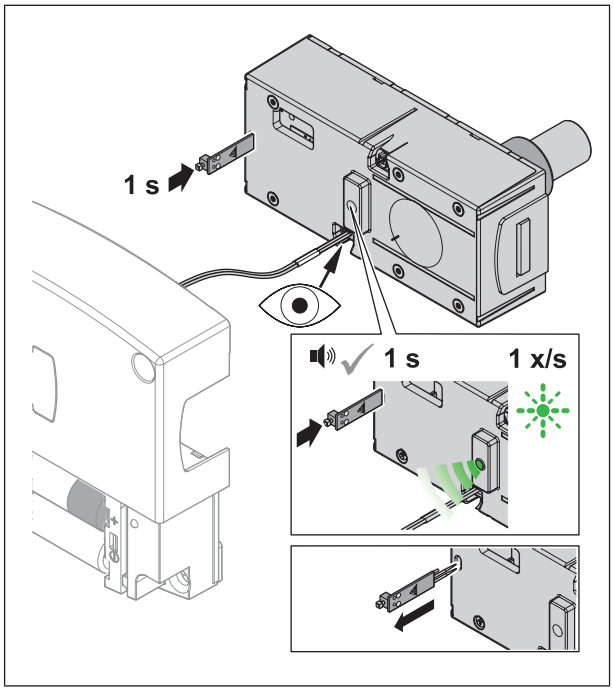

2. Press and hold the push-button for 1 second. Green LED flashes 1x/sec.
   ► A simple reset is carried out.
   ► Acoustic signal is heard.
   ► Remove the push-button.
   ► The locker lock switches to commissioning mode (*6. Commissioning, page 30*).
3. Insert the lock case into the installation housing. Install LL 300.

732.22.151

HDE 14.11.2023

10.2 Complete reset

A complete reset will reset the locker lock to its factory settings. All data will be deleted. The locker lock must then be reconfigured (⇨ *6. Commissioning, page 30*).

A complete reset is required in the following cases:

- Complete erasing of all data (e.g. in the event of return to stocks / warehouse).
- Resetting of software operation to stand-alone operation (SA).

Prerequisites:	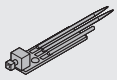	Push-button (910.53.311)

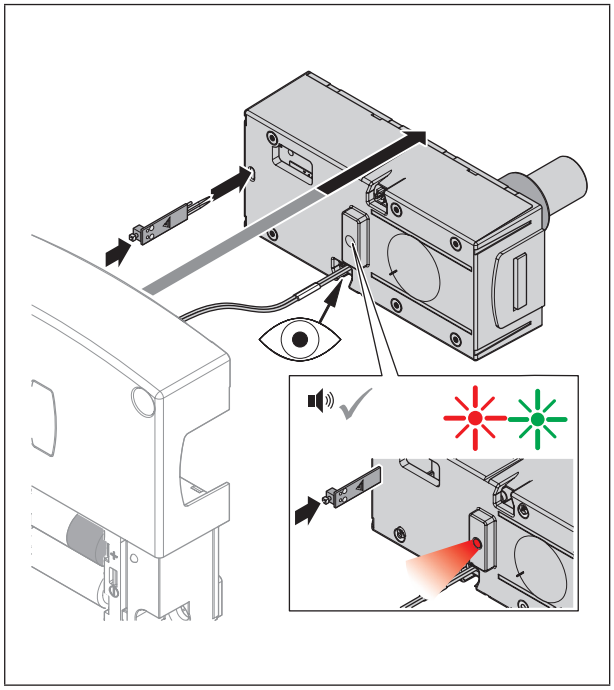

1. Remove the lock case from the installation housing. Place the push-button on the contacts in the lock case.
   ► Press push-button.
   ► The signal tone sounds briefly.
   ► Red and green LEDs illuminate.

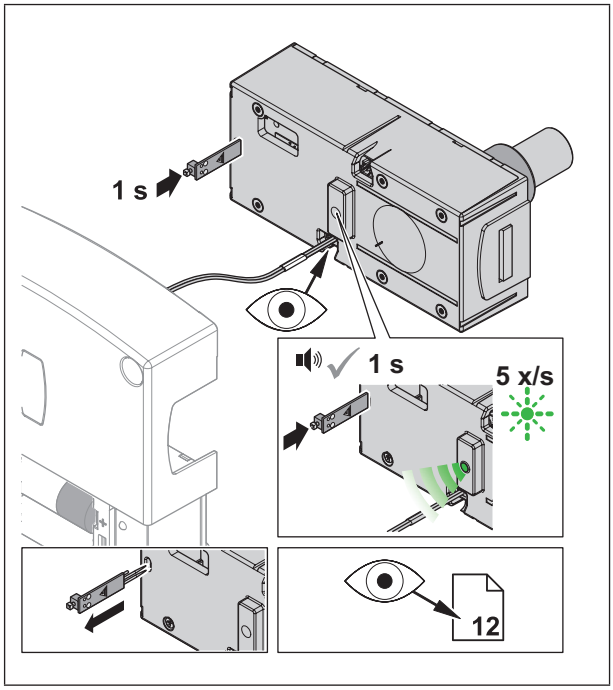

2. Press and hold the push-button for at least 3 seconds.
   A factory reset is performed.
   ► Red and green LED flash 5x/sec..
   ► Acoustic signal is heard.
   ► The factory settings are restored.
   ► Remove the push-button.
   ► The locker lock switches to commissioning mode (*6. Commissioning, page 30*).
3. Insert the lock case into the installation housing. Install LL 300.

11. Cleaning and maintenance

11.1 Cleaning

NOTE

Damage to product due to incorrect cleaning

- Do not use cleaners containing alcohol, organic solvents or thinners.
- Do not use abrasive materials.
- Do not use pressure or steam cleaning devices.
- Only clean the outer surfaces of the product if necessary.
- Clean the surface of the product with a dry, soft cotton cloth or a damp cloth with a little washing-up liquid or neutral cleaner.

11.2 Maintenance

The product is maintenance-free apart from having to change the batteries.

NOTE

Damage to product due to incorrect maintenance

- Do not carry out repairs.
- Do not use lubricants.
- Contact the manufacturer in the event of damage / malfunctions.
- If the product and/or the battery compartment are damaged (e.g. due to falls or collisions), also check the batteries for damage.
- In case of visible damage to the batteries or leaking battery acid, remove the batteries immediately and dispose of them properly in accordance with national regulations. Avoid contact with the battery acid.
- If parts have to be replaced, always use original replacement parts from HÄFELE.

11.3 Changing the batteries

If the batteries are low, the LL 300 can be opened again, but not closed.
When the LL 300 is activated by pressing the push-button, an acoustic signal sounds three times and the LEDs on the inside flash red and green alternately three times. This is the request for an immediate battery change.

NOTE

Malfunction due to low battery charge!

- Problem-free operation is only ensured with fully charged batteries.
- Replace weak batteries immediately as soon as the signal occurs!
- Only use new and recommended batteries (*3.2 Technical data, page 27*).
- Always replace all batteries.
- The use of rechargeable battery packs is not permitted.

The locking authorisations for the user keys are also retained after a battery change and do not have to be reset.

Prerequisites: 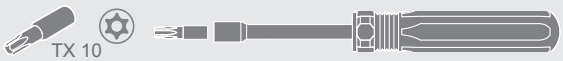

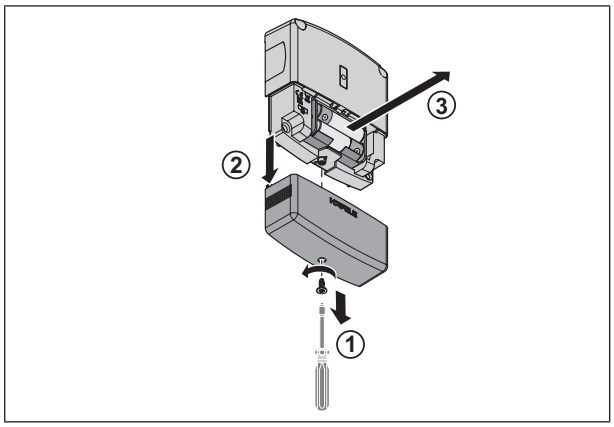

1. Loosen the fastening screw of the battery cover. Pull the battery cover down and off.
   ► Remove the battery holder.

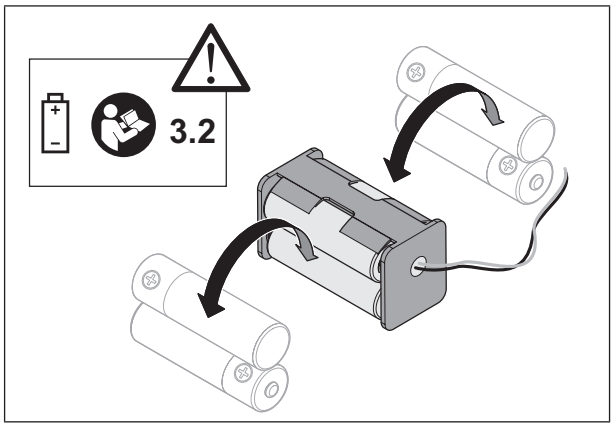

2. Remove the batteries. Insert new batteries. Ensure the polarity is correct.

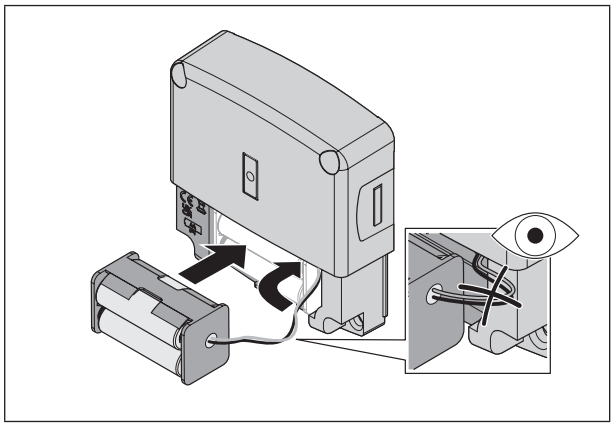

3. Insert the battery holder. Ensure that the cable is routed correctly (do not kink / pinch).

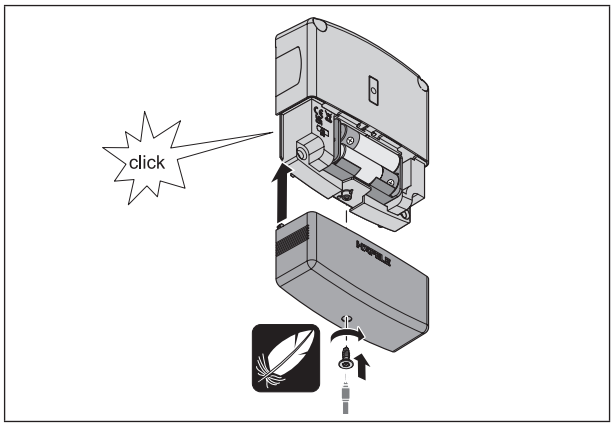

4. Push the cover back on and fix it in place with the fastening screw.

The internal clock continues to run for up to 60 minutes without batteries.

- When using the product with Dialock software applications, set the time again if necessary after changing the batteries with the MDU 110 mobile data transfer unit.
- When using the My Dialock Manager app, the product must be parametrised with the app and the Authorisation Key Card (AKC). The time is automatically reset.

12. Storage

Store packages under the following conditions:

- Do not store outdoors.
- Store in a dry and dust-free place.
- Do not expose to aggressive media.
- Protect against sun exposure.
- Avoid mechanical vibrations.
- Maintain the storage temperature: - 25 °C to + 70 °C
- Observe the relative humidity: max. 95%, not condensed

i If there are further storage instructions provided in the product packaging, be sure to comply with these also.

13. Disposal

Do not dispose of the appliance in household waste.
Please note the country-specific regulations.

14. EU Declaration of Conformity

Häfele SE & Co KG hereby declares that the locker lock LL 300 complies with Directives 2014/53/EU and 2011/65/EU.

15. UKCA Declaration of Conformity

Häfele SE & Co KG hereby declares that the locker lock LL 300 complies with the "Radio Equipment Regulations 2017" and "Restriction of hazardous substances (RoHS) 2012".

16. ANATEL Declaration of Conformity

This product contains a SCM-1 certified module.

Modelo: Smart Core Modul SCM-1

ANATEL
Agência Nacional de Telecomunicações

10194-20-12661

Para maiores informações, consulte o site da ANATEL www.anatel.gov.br

Este equipamento não tem direito à proteção contra interferência prejudicial e não pode causar interferência em sistemas devidamente autorizados.

"Este produto contém a placa Smart Core Modul SCM-1 código de Homologação 10194-20-12661"

The full texts of the declarations of conformity are available under the product on the following website:

732.22.151

HDE 14.11.2023

17. Approval in accordance with Part 15 of the FCC regulations

NOTE: This device has been tested and corresponds to the limit values for a class B digital device in accordance with Part 15 of the FCC regulations. These limits should provide appropriate protection against harmful interference in the event of installation in residential areas. This equipment generates, uses and can radiate radio frequency energy and, if not installed and used in accordance with the instructions, may cause harmful interference to radio communications. However, there is no guarantee that interference will not occur in a particular installation. If this equipment does cause harmful interference to radio or television reception, which can be determined by turning the equipment off and on, the user is encouraged to try to correct the interference by one or more of the following measures:

- Re-align or re-position the receiver antenna.
- Increase distance between device and receiver.
- Connect the device to an outlet on a circuit different from that to which the receiver is connected.
- Consult the dealer or an experienced radio/TV technician.

i This device complies with Part 15 of the FCC regulations [and the licence-free RSS standards of Industry Canada]. Operation is subject to the following two conditions:

- This device must not cause harmful interference.
- This device must accept all received interference, including interference that may cause undesired operation.

i Changes or modifications to this device not expressly approved by Häfele could void the FCC authorisation to operate this equipment.

i Approval only applies to products with the appropriate marking on the product label.