OPERATION MANUAL

SAILOR®

SAILOR RT5022 VHF DSC
SAILOR RT5020 VHF DSC Duplex

Thrane & Thrane

Introduction

Congratulations on your new SAILOR RT5022/RT5020 VHF.

SAILOR marine equipment is specially designed for the extremely rugged conditions on board a ship, based on more than 50 years of experience with all kinds of vessels, from small pleasure crafts, over fishing vessels working under all climatic conditions, to the biggest ships.

SAILOR ® is one of Europe's leading manufacturers of maritime radio communication equipment - a position which has been maintained by means of constant and extensive product development. We have a worldwide network of distributors with general agencies in more than 80 countries. All our distributors are specially trained to service all your SAILOR ® products.

About this manual

This manual is for the daily user of the system. Additionally, it includes a section on the installation procedures, and - on page iii - standard distress procedures. **We highly recommend you to read the manual before you start using the equipment.**

Notice: There may be some minor differences in the graphic layout of the product in the manual compared to the actual physical unit.

Abbreviations used in this manual

ADDR	Address
BI	Channel mode when sailing on European rivers
BQ	DSC Call Acknowledgement Reply
CU	Control Unit
DSC	Digital Selective Calling
DW	Dual Watch
EOS	DSC End Of Sequence
GMDSS	Global Maritime Distress and Safety System
MMSI	Maritime Mobile Service Identification
PTT	"Push To Talk" button
RQ	DSC Call Acknowledgement Request
RX	Receive/r
SQ	Squelch
TX	Transmit/ter
UTC	Coordinated Universal Time

Please note

Any responsibility or liability for loss or damage in connection with the use of this product and the accompanying documentation is disclaimed. The information in this manual is provided for information purposes only, is subject to change without notice, may contain errors or inaccuracies, and represents no commitment whatsoever. This agreement is governed by the laws of Denmark.

Doc. No.: B5022GB0 Issue: F/0549

Training Information

The Thrane & Thrane RT5022/RT5020 VHF radio is designed for “occupational use only” and is also classified as such.
It must only be used in the course of employment by individuals aware of both the hazards as well as the way to minimize those hazards.
The radio is thus NOT intended for use in an uncontrolled environment by general public.
The RT5022/RT5020 has been tested and complies with the FCC RF exposure limits for “Occupational Use Only”. The radio also complies with the following guidelines and standards regarding RF energy and electromagnetic energy levels including the recommended levels for human exposure:

- FCC OET Bulletin 65 Supplement C, evaluating compliance with FCC guidelines for human exposure to radio frequency electromagnetic fields

- American National Standards Institute (C95.1) IEEE standard for safety levels with respect to human exposure to radio frequency electromagnetic fields, 3 kHz to 300 GHz

- American National Standards Institute (C95.3) IEEE recommended practice for the measurement of potentially hazardous electromagnetic fields – RF and microwaves

Below the RF exposure hazards and instructions in safe operation of the radio within the FCC RF exposure limits established for it are described.

Warning:
Your Thrane & Thrane radio set generates electromagnetic RF (radio frequency) energy when it is transmitting. To ensure that you and those around you are not exposed to excessive amounts of that energy (beyond FCC allowable limits for occupational use) and thus to avoid health hazards from excessive exposure to RF energy, FCC OET bulletin 65 establishes an Maximum Permissible Exposure (MPE) radius of 3” (0.9m) for the maximum power of your radio (25W selected) with an half wave omni-directional antenna having a maximum gain of 3 dB (5.2dBi). This means all persons must be at least 3” (0.9m) away from the antenna when the radio is transmitting.

Installation:

1. An omni-directional antenna with a maximum power gain of 5.2 dBi must be mounted at least 9.6” (2.9m) above the highest deck where people may be staying during radio transmissions. The distance is to be measured vertically from the lowest point of the antenna. This provides the minimum separation distance which is in compliance with RF exposure requirements and is based on the MPE radius of 3” (0,9m) plus the 6.6” (2m) height of an adult.

2. On vessels that cannot fulfil requirements in item 1, the antenna must be mounted so that its lowest point is at least 3” (0.9m) vertically above the heads of people on deck and all persons must be outside the 3” (0.9m) MPE radius during radio transmission.

   - Always mount the antenna at least 3” (0.9m) from possible human access
   - Never touch the antenna when transmitting
   - Use only authorized T&T accessories

3. If antenna has to be placed in public areas or near people with no awareness of the radio transmission, the antenna must be placed at a distance not less than 6” (1.8m) from possible human access.

Failure to observe any of these warnings may cause you or other people to exceed FCC RF exposure limits or create other dangerous conditions.

Quick DSC distress call
(only for emergency use)

1. If necessary, switch on by pressing the ON/OFF button

2. Lift up the lid covering the orange Distress key and press for 5 seconds.

3. The **Alarm** indicator light will flash and will be accompanied by a sound. Distress message is sent at the continuous tone.

4. Unless stopped manually, by pressing the ◀Menu key or switching the unit off, the distress call is automatically repeated every 3½-4½ minutes until distress acknowledgment is received.

Wait for distress acknowledgement and start mayday procedure. If an alarm panel is connected the VHF DISTRESS button on this unit will have the same functionality. All further handling should continue in front of your main VHF DSC.

NOTE: If needed the default language (English) is obtained by pressing the following keys:

Mayday procedure

When DSC distress acknowledgement is received after you have pressed DISTRESS, or if you otherwise need to commence distress traffic via radiotelephony on the distress traffic frequency channel 16, follow this procedure:

- “MAYDAY”,
- “this is”,
- the 9-digit identity *and* the call sign or other identification of the ship,
- the ship’s position in latitude and longitude or other reference to a known geographi cal location,
- the nature of distress and assistance wanted,
- any other information which might facilitate the rescue.

Upon reception of a DSC distress alert from another ship in distress, you should acknowledge the receipt by radiotelephony on the distress traffic frequency channel 16, by doing the following:

- “MAYDAY”,
- the 9-digit identity of the ship in distress, repeated 3 times,
  “this is”,
- the 9-digit identity or the call sign or other identification of own ship, repeated 3 times,
- “RECEIVED MAYDAY”.

Your VHF at a glance (RT5020/RT5022)

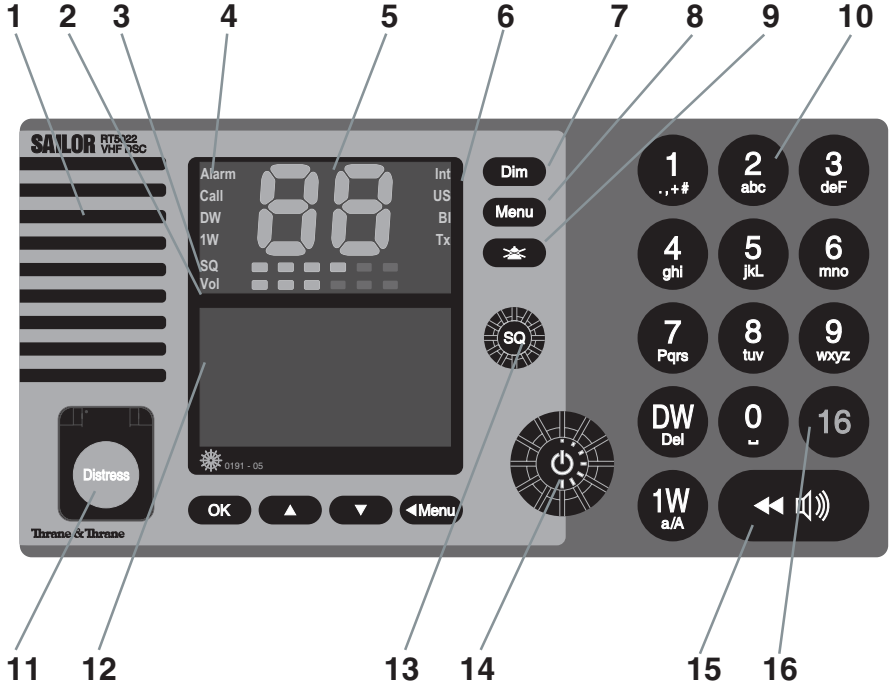

1. Loudspeaker
2. Volume level indicator
3. Squelch level indicator
4. Indicator lamps. Condition when lit:
   1W: 1 watt transmission mode.
   Alarm: Alarm call received.
   Call: DSC call for you received.
   DW: Dual watch mode
5. Telephone display
6. Indicators. Condition when lit:
   Tx: Transmitting
   Int: International channel system activated
   (Is used when sailing on any sea in the world except in US waters)
   US: US channel system activated
   (Is used when sailing in US Waters)
   BI: BI channel system activated
   (Is used when sailing on the rivers of Europe)
7. Dimming button
8. Menu button
9. Mute alerts
10. Keyboard.
11. DISTRESS button (Lid with spring. Normal push button underneath)
12. Information/Message display
13. Squelch control. Adjust to silent when no station is received
14. ON/OFF / VOLUME control
15. Replay button
16. Quick-selection key for channel 16.

Contents

Introduction ..... **ii**
About this manual ii
Abbreviations used in this manual ii

Training Information ..... **iii**
Quick DSC distress call ..... **iv**
Mayday procedure ..... **iv**
Your VHF at a glance (RT5020/RT5022) ..... **v**

1 Radio communication in brief **3**
1.1 Powering VHF 3
1.2 Operating VHF radio communication 3
1.3 Receiving a call on Channel 16 3
1.4 Making a radiotelephone call 4
1.5 Speaker volume 4
1.6 Earpiece volume 4
1.7 Squelch 4
1.8 Channel selection 5
1.9 Dual watch 5
1.10 Replay 5
1.11 Dimming 6
1.12 Contrast 6

2 Basic DSC operations **7**
2.1 Menu operation 7
2.2 Receiving a DSC call 7
2.3 Transmitting DSC Calls 8
2.4 Call a ship station 8
2.5 Call a shore station 8
2.6 Direct call to a PSTN via a coast station 8
2.7 Call a group of ships 9
2.8 Create emergency calls 9
2.9 DSC call log 9
2.10 Entering your position into the system 9

3 Your VHF in detail **11**
3.1 Abnormal power-down 11
3.2 Settings 11
3.3 Automatic squelch programming 11
3.4 Setting channel mode 11
3.5 Private channels 12
3.6 Duplex channels 12
3.7 ATIS (inland waterways only) 13
3.8 Transmitter power 13
3.9 Channel scanning 13
3.10 Creating scan tables 14

4 DSC operations in detail 15
4.1 MMSI Number 15
4.2 Group MMSI number 16
4.3 Differentiating incoming calls by ringing tones 16
4.4 Working channel 17
4.5 Contact list 17
4.6 Settings for DSC 19
4.7 Implicit behaviour for operations with DSC 20
4.8 Radio configuration and settings 22

5 Errors and warnings 24
5.1 System event logging 24
5.2 Troubleshooting 24

6 Menu tree 28

7 Optional functional devices 30
7.1 Semi-functional control unit 30
7.2 Alarm panel 34

8 Maritime Channels 35
8.2 US channels 36
8.3 BI channels 37
8.4 CA channels 38

9 Installation 39
9.1 Mounting possibilities 39
9.2 Interface connections 46
9.3 Power supply 52
9.4 Antenna installation and precautions 53

10 Technical specifications 55
10.1 General information 55
10.2 General DSC facilities 55
10.3 Specific data for transceiver unit RT5022 55
10.4 Specific data for transceiver unit RT5020 56

1 Radio communication in brief

1.1 Powering VHF

The VHF is turned on by a single press on the ON/OFF/Volume button. The VHF is turned off by pressing the ON/OFF/Volume button for 3 seconds.
Always indicated by a count down window in the information display, except if the radio is powered down in distress mode.

Any connected devices (Alarm Panel, Handset, CUs) will be operational only if the VHF is powered.

1.2 Operating VHF radio communication

The VHF is operated by means of a handset.
To bring the VHF in transmission mode the handset must be hooked off and the PTT button on the handset has to be pressed. Transmission is indicated by the lighted TX indicator.
Receive mode is always reached by releasing the PTT button.

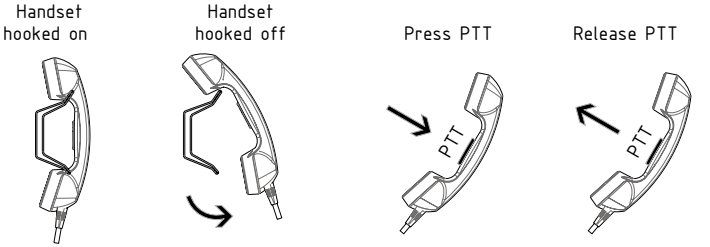

Transmit and receive is performed on the working channel shown in the telephone display.
If the handset is used with an RT5020 duplex radio, received signal can always be monitored in the handset earpiece. With the RT5022 simplex/semi-duplex radio the received voice signal can only be monitored in the earpiece while PTT is released.

1.3 Receiving a call on Channel 16

When you hear your call name in the loudspeaker:

1. Lift the handset.
2. Press the **PTT** key.
3. Repeat the name of the station calling you and say “This is [your ship’s name].”
4. Suggest a channel other than 16 by saying “Channel [suggested number]”.
5. Say “Over” and release the **PTT** key
   to allow your caller to confirm the suggested new channel.

6. Switch to the new channel – for example, channel 71
   – and begin your conversation. Press **PTT** only when you are talking. If you are on a simplex channel (in other words, a channel that can carry only one transmission at a time), always say “Over” just before releasing. With duplex channels (ship-shore calls), the conversation can be two-way as with a normal land telephone calls.

1.4 Making a radiotelephone call

A radiotelephone call is preferably to be commenced using DSC. Alternatively the following public calling procedure shall be used:

1. Select channel 16 (by pressing 16) or other agreed channel.
2. Lift the handset.
3. Press the **PTT** key and make your call.
   First, say the name of the station
   you are calling three times.
   Then say “This is [your ship’s name”], again three times.
   Finally, say “Over”.
4. Release the **PTT** key to listen.
5. When answered, agree upon a channel,
   switch to that channel – for example, channel 6 – and begin your conversation. Press **PTT** only when you are talking. If on a simplex channel (in other words, a channel that can carry only one transmission at a time), always say “Over” just before releasing.

1.5 Speaker volume

The volume in the loudspeaker (internal and optional external) is adjusted by turning the VOLUME control. The volume level is visualized in the telephone display. The volume can be adjusted to a mute mode by turning the volume control left (down). If the volume is adjusted to the mute level the VOL LED will flash.

1.6 Earpiece volume

The volume level of the default handset earpiece is adjusted by selecting the Handset Volume menu **(4.3.1)**.

The ▲ and ▼ buttons are used to adjust the level. The level is indicated in the information/message display.

1.7 Squelch

The squelch level is adjusted by using the squelch control. The actual squelch level is visualized in the telephone display.

1.8 Channel selection

The system is defaulting to channel 16 after a normal power-on.

Channels can be selected using the
(increasing to next valid VHF channel) or
(decreasing channel). Channels can also be entered using the numeric keypad.

The active working channel is always shown in the upper display.

1.9 Dual watch

Dual watch is a mode where the priority channel (16) is scanned periodically for a signal while listening on a working channel.
Dual watch is activated by pressing the DW button.

The DW indicator is lit while DW is active. Dual watch is deactivated by:

- Pressing DW – Continues to receive on the working channel.
- Pressing PTT – Transmits always on working channel
- Pressing ´16´.
- Pressing Replay - Dual watch is terminated while the message is replayed and will then be re-invoked

Selecting a new channel while in dual watch mode will continue dual watch on the new selected working channel, unless a signal is found on channel 16.

1.10 Replay

Replay is a facility built into the product which always will allow the operator to repeat the latest 90 seconds of received voice data to be replayed in the acoustic devices.
Received voice data is defined when the squelch is open. This means that 90 seconds of actual traffic could be accumulated over several hours/days.

If the 90 seconds storage limit is reached the oldest data is simply overridden with the newest received traffic data (FIFO principle).

Activating replay

The front panel has a dedicated replay button.

A push on the replay button will bring up a (replay) window in the information/message display. Holding down replay will drive a counter to be updated in the display where it is determined how many seconds of recorded data is wanted for replay - the last XX seconds of recorded data.

If pressing the replay button in normal receive mode this will still allow the unit to receive audio in the speaker system.

When releasing the replay button the replay function will take over the audio system and start to replay the last XX seconds of data received on any channel. The time when the traffic was received and the channel on which it was received is displayed during replay.

Volume control can be used on the replay data to adjust sound pressure in audio devices. During replay "— —" is shown in the channel display, to indicate that listening on the live receive signal is disabled in this situation (as well as recording is disabled). If a signal is received on the working channel while replay is activated, this is indicated in the lower left corner of the replay window.

Replay is interrupted when:

- Pressing OK , Menu or ◀Menu
- Pressing PTT
- Receiving any message in the information/message display

Recorded voice data will not survive power-down of any kind.

1.11 Dimming

Dim

To adjust the light intensity the dim button is pressed.
While the dim button is pressed the intensity is changing. Releasing the dim button will maintain the current light intensity.

A renewed pressing of the dim button will change the direction of the light intensity change.

If the VHF is dimmed to zero, any key press will wake up the light to a minimum visible at night. Active text in the information/message display might prevent dimming to zero.

It is possible to reduce illumination to zero. If you press a key in this state the light will illuminate to the lowest illuminated state for 5 seconds, where after it will return to the zero illumination state. If a message is shown on the screen while dimming is set to zero, the illumination is adjusted to the lowest nonzero value.

1.12 Contrast

Contrast of the information/message display (and thereby optimizing the vertical viewing angle) can be adjusted initially by entering the Display Contrast menu. Use the arrows to adjust contrast. The contrast will be set simultaneously during adjustment.

2 Basic DSC operations

When switched on, your VHF automatically monitors channel 70 for incoming DSC calls.

2.1 Menu operation

To operate DSC functionality the menu system is used. The main menu can be activated by pressing Menu. From the main menu all parts of the menu tree can be reached (see chapter: Menu tree).

All menus have a unique hierarchical number. The main menu is the only menu which does not have a number. The number is (to a certain level) displayed in the upper right corner of the screen. If more than 6 items are available in the menu, arrows will indicate if remaining items are to found above (▲) current items or below (▼) current displayed menu items.

The active menu item is highlighted. A press on ▲ or ▼ will move the focus.

A press on OK will select the item which is currently in focus.

A press on any of the numeric keys (1 to 9) in a menu will quickly select the menu item having the corresponding number.

A press on ◀Menu will return to the previous menu window (normally one level up). If ◀Menu is pressed in the main menu, the menu will be turned off.

Selecting the menus for transmitting DSC calls will lead to a sequence of windows (flows). The flow sequences are controlled by the OK (accept and proceed to next window) or ◀Menu (cancel and return to the previous window) buttons.

Following a menu hierarchy or a window flow might include a guidance text (e.g. “OK/next” ◀Menu). Certain windows and lists do not show any guidance texts. These windows can always be left by Menu (jumping to main menu) or ◀Menu (returning to the previous window).

2.2 Receiving a DSC call

An incoming call will always be recognized by activity on the CALL indicator – and if more severe (Distress and Urgency calls), also the ALARM indicator. When receiving a DSC call the message will be displayed immediately in the information/message display, if not obstructed by any other operations taking place. Received DSC calls will always be accompanied by a sound alarm.

When you receive a call you can read in the display whether the call is addressed to All Ships, ships in a specific geographic area, a group of ships or to your ship (identified by your MMSI number) as an individual call.

If you are busy you can choose to handle the call a little later (e.g. by pressing), which will stop the alarm sound.

When you are ready to accept the call, lift the handset or press OK. Your choices handling the particular call will now appear. Follow the instructions.

If an individual call is received it will not be acknowledged before you accept the call.

2.3 Transmitting DSC Calls

All DSC calls are initiated from the DSC Call Menu **(1)**.

When entering a menu item, you will be guided through the call construction. For every call generated you will have the possibility of verifying the call before you transmit it.

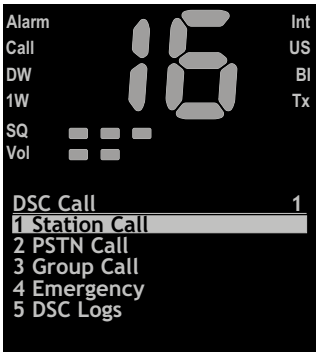

2.4 Call a ship station

To call a ship station and suggest a working channel, enter the Station Call menu **(1.1)** and follow the instructions. Have the ships MMSI number ready if it is not available via the contact list.
Please also refer to Section 4.1.2 for using extended sub-addressing.

2.5 Call a shore station

To call a shore station, enter the Station Call menu **(1.1)** and follow the instructions. Have the shore MMSI number (00*) ready if it is not available via the contact list.

2.6 Direct call to a PSTN via a coast station

This kind of calls requires automatic/semi-automatic support from the coast station, and is available only within some countries. If the service is not available, you will need to make a simple shore station call and request the connection via radiotelephony.

To make a direct phone call to a PSTN or a mobile phone, enter the direct phone call menu **(1.2)** (PSTN Call) and follow the instructions. Have MMSI number (00*) for a reachable shore station ready if it is not available via the contact list, as well as the public phone number you would like to request.

2.7 Call a group of ships

To call a group of ships enter the Group Call menu **(1.3)** and follow the instructions. Have the group MMSI number (0*) ready if it is not available via the contact list.

2.8 Create emergency calls

In the category of emergency calls **(1.4)** you will find the following menu:

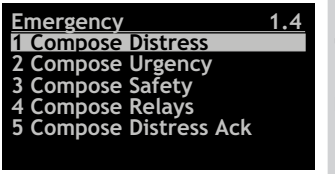

Transmitting any of these calls should be done with caution. Please make yourself familiar to the common procedures for using these calls.

Selecting any of the call types will lead to a call establishing flow with maximum flexibility. You should make yourself familiar with the flow sequences, but be sure you do not actually send the message by mistake. **In other words, never press OK the transmit verification window if you do not actually intend to send an emergency call.**

Designated distress calls are composed entering the menu **(1.4.1)**. From this list the Nature of Distress is selected. A fast method to reach this selection list is a short press on Distress.

The call completion is then continued from here. If no nature of distress is selected, but Distress is pressed for 5 seconds, an undesignated distress is sent.

Distress calls are always transmitted by pressing the Distress button for 5 seconds. After you have transmitted a distress call the VHF is in distress mode (distress call is re-transmitted once each 3½-4½ minutes). The distress mode can be exited only by reception of the appropriate distress acknowledgement call or if you press ◀Menu for 5 seconds, or if you power off the VHF. The VHF will start up in distress mode after a power failure.

2.9 DSC call log

Received and transmitted DSC messages can be found with details in the DSC Logs **(1.5)**. A special log contains distress related calls. The call log system will store the last (20) calls sorted by date and time.

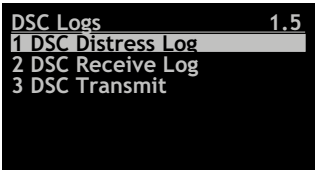

Each of the logs and each of the calls within the logs have their own possible actions upon selection (e.g. printing).

2.10 Entering your position into the system

Ship's position and the time for this position are essential to the success of a possible rescue operation. This information is automatically added to a DSC distress call sent from your VHF. Therefore it is important always to keep this information updated.
Normally a GPS is connected to the VHF. In case of correct installation this will assure correct updating of position and time.

If your VHF is not connected to an external GPS system, or a malfunction of the GPS connection is detected by the VHF, the VHF will automatically prompt you to update your position manually 1 minute after power-up and then every 4 hours. The position and time can always be entered on your initiative via the Set Position & Time selection in the Settings menu **(4.1.1)**.

3 Your VHF in detail

3.1 Abnormal power-down

If for any reason the main power disappears for a period less than 10 minutes, the VHF will be able to turn itself on when power is resumed (without pressing ON/OFF).

If the VHF was abnormally powered down for less than 1 minute, the VHF will start up with the same settings as before the power failure took place (communication channel, volume, squelch settings, etc.).

If the abnormal power down lasted more than 1 minute the VHF might start up with the settings as they were last time the VHF was turned off normally.

3.2 Settings

All volume settings are stored as default during the power off sequence.

3.3 Automatic squelch programming

It is possible to attach a squelch level with each channel if particular noisy channels require continuous special squelch setting. If a channel is selected squelch level is inherited from either the global setting or a stored squelch level for that particular channel (default is that all channels are using the global squelch level).

Storing squelch level on a channel is done while listening on that particular channel:

- Push the

button.
- The squelch level is now automatically adjusted to suppress the noise on the channel. While adjusting, noise is heard. The squelch level indicator follows adjustment, and finally display the required level. The squelch level is memorized on the channel, indicated by flashing the SQ LED (flashing 3 seconds).

If a channel with a programmed squelch level is selected and the SQUELCH button is turned the programmed squelch level for that channel is removed (global level).

During Dual Watch or Scanning only the global squelsh level is used (as indicated by the squelch level indicator). Channel 16 squelch level is not programmable.

All programmed channel squelch levels are stored during power down and restored during power-up sequence.

3.4 Setting channel mode

The VHF is delivered from factory with both Int. & US channels enabled for selection from the operation menu.
Provision of other country regions (channel tables) for selection requires the intervention by an authorized Sailor representative in order to enable such.
The operator selection of preferred country region (channel table) is done from menu 4.4.1 (channel mode) and the selected country region is indicated in the front panel display (note: this does not apply to the CA channel table and any custom defined channel tables).

The selected country region is stored during power down sequence.

Using the country region BI (Inland waterways) Dual Watch (DW) and scanning mode are not available.

3.5 Private channels

Private channels can be defined by using the service interface only (distributor/dealer).

Enabled private channels become valid for selection on the front panel. Using the ▲ / ▼ will simply make the private channel number appear above the highest numeric channel number. 30 (3x10) private channels are available for each enabled channel mode.
Note: In US mode private channels P0-9 will be pre-programmed with the 10 weather channels. In CA mode, P0-2 is pre-programmed with the 3 regional weather channels.

Private channels can be selected using the numeric key pad:

- Private channels: Long press on 7 Pqrs followed by a digit (**0-9**)
- Leisure channels: Long press on 5 jkL followed by a digit (**0-9**)
- Fisher channels: Long press on 3 deF followed by a digit (**0-9**)

Continued activation of the keys ´3´, ´5´ or ´7´ will cause the letters **F-, L-** or **P-** respectively to be displayed.

3.6 Duplex channels

If duplex channels are selected on an RT5022 simplex/semi-duplex radio (see chapter: Maritime channels) the VHF will operate in semi-duplex mode meaning that the VHF is operated in simplex mode, but uses two different frequencies to receive and transmit.
If a duplex channel is selected on an RT5020 duplex radio full duplex is supported on these channels, meaning that both receiver and transmitter is active simultaneously.

3.7 ATIS (inland waterways only)

ATIS is mandatory to use in inland waterways on e.g. the Rhine. ATIS is a digital data stream containing ships call sign coded into a DSC-like message, sent over the voice channel each time the PTT button is released. If PTT is continuously pressed ATIS is automatically sent each 5 minutes.
ATIS is enabled automatically when BI is selected in menu **(4.4.1)**.
For purpose of operator comfort the received ATIS signal on the active voice channel will be muted.
The ATIS call sign is programmable from the service interface or from menu **4.4.3**. once.

The format of the programmed ATIS code is entered according to the following call sign prefix conversion table:

Character	Phonetic	Value	Character	Phonetic	Value
A	Alpha	1	N	November	14
B	Bravo	2	O	Oskar	15
C	Charlie	3	P	Papa	16
D	Delta	4	Q	Quebec	17
E	Echo	5	R	Romeo	18
F	Foxtrot	6	S	Sierra	19
G	Golf	7	T	Tango	20
H	Hotel	8	U	Uniform	21
I	India	9	V	Victor	22
J	Juliett	10	W	Whiskey	23
K	Kilo	11	X	X-ray	24
L	Lima	12	Y	Yankee	25
M	Mike	13	Z	Zulu	26

I.e. a Dutch (MID-number 244) ship with call sign SP1234, should be programmed with the following number:

244P1234

with the digit **2** entered as the first digit, and the digit **4** as the last digit.

3.8 Transmitter power

Transmitter output power can always be chosen while the radio is active. Pressing the 1W button will toggle the transmitter power between low power (below 1W) and high power (below 25W). The 1W indicator is lit when low power is selected. As a default any channel shift will cause the transmitter power to be adjusted to the maximum power allowed on that channel.

3.9 Channel scanning

Scanning is an extension to the dual watch functionality, by which it is possible to watch multiple channels. It is possible to scan:

- All channels in a sequence
- A number of selected channels in a sequence organized into individual 3 scan tables - Scan table A, B and C.

The scan type can be selected from the Scanning menu **(3)**. The DW indicator is lit as well (because the priority channel 16 by default is included in any scan table).

During the scan “SC” is shown in the upper display.

If an active signal is found on a channel different from channel 16 the radio remains on that channel for 4 seconds (but still respecting dual watch requirements), where after scanning is resumed. The telephone display is displaying the active channel.

If an active signal is found on channel 16, the VHF is locked on channel 16 until the signal disappears, where after scanning is resumed. The telephone display is displaying the active channel (16).

While the active scanning window is visible, scanning can be terminated by:

- Lifting the handset off the hook
- Pressing ´16´ - Channel 16 is used as working channel
- Pressing DISTRESS – Initiates DSC distress
- Pressing ◀Menu – Working channel is used as before scanning was entered (regardless of carrier state).
- Pressing Replay - Message is replayed
- Pressing any numeric key - Normal channel entry

If scanning is terminated while no active signal was found, the VHF will receive on the working channel (as it was before scanning was initiated).

If scanning is terminated (handset hook-off) while an active signal is received, the VHF will operate on this channel after termination.

3.10 Creating scan tables

The scanning tables are user configurable. Creating or editing a scanning table by organizing a subset of channels (e.g. Table A) for scanning is done by selecting the Edit Scan Table A entry **(3.5.1)**.

Private channels (non-numeric identifiers – P, F or L) can be part of a channel table. The number of channels in a scan table is limited to 16.
3 scan tables (A,B & C) can be defined for each enabled channel mode.
Scanning tables are stored during the power-down sequence.

4 DSC operations in detail

4.1 MMSI Number

To operate VHF with DSC the equipment needs to be configured with your vessel's MMSI number. If not configured before installation, the VHF will inform you to program the 9-digit MMSI number at start-up.

The vessel's MMSI number is programmable from the DSC menu **(4.5)**. It can be programmed only once from this menu after which changing of the programmed MMSI will be possible only through the service interface.

If the MMSI number has been programmed correctly, the number is displayed in the default idle display after start-up.

4.1.1 Sub-Addressed MMSI

The VHF supports setting the 10th digit of the MMSI number to a non-zero value. This is to be used for being able to individually address multiple VHF's on board a single vessel (with the same 9-digit MMSI).
The 10th digit of the MMSI number can be programmed by the operator. After programming the vessel MMSI number the 10th digit will always be set to 0.

Programming the 10th bit is done via the menu **(4.5.6.1)**

If the unit is configured to a non-zero X10 value, it will only respond to received individual routine calls matching all 10 digits in the MMSI number. Transmitted routine calls or acknowledgements to individual routine calls are using the self-ID with non-zero digit 10.

If X10 is programmed to zero the unit reaction modes, if receiving an individual call with non-zero X10 in the address or self-ID, can be selected using the menu **(4.5.6.2)**.

Selecting **1 Acknowledge non-zero**, the unit will receive the call. A call acknowledgement will be returned to exactly the same address as received in the self-ID (default after programming the MMSI number).
Selecting **2 Acknowledge zero**, the unit will receive the call. A call acknowledgement will be returned to address as received in the self-ID, but with X10 set to zero.
Selecting **3 Reject call**, will ignore the received call.

4.1.2 Using extended sub-address in a calling sequence

Entering the station call menu (**1.1**) allows you to address an RT call request to another radio supporting the extended address format. If the receiver MMSI is not a coast station (00*), it is possible to enter either 9 or 10 digits in the Enter Receiver MMSI window. Entering 9 digits will automatically set the 10th digit to zero for the receiver address.

All other call flows than RT station call requests to a ship station are not supporting this feature.

It is possible to create entries in the contact list with 9 or 10 digit MMSI numbers, unless they are group station (0*) or coast station (00*) numbers.

4.2 Group MMSI number

If your radio is configured as member of a group(s) it will receive group calls to that group.

The VHF can be configured to be part of (up to 10) groups. The group MMSI numbers can be programmed from menu **4.5.2**.

The configured group numbers are shown as a list. You can add a group MMSI number by selecting the <empty> list entry and press OK. Enter a valid group MMSI and press OK .

A group number can be changed by selecting the number OK, edit the number and press OK. A group number can be removed from the list by selecting the number, press OK, delete the number and press OK.

4.3 Differentiating incoming calls by ringing tones

Your VHF rings in various ways according to the nature of the call, as shown in the following diagram:

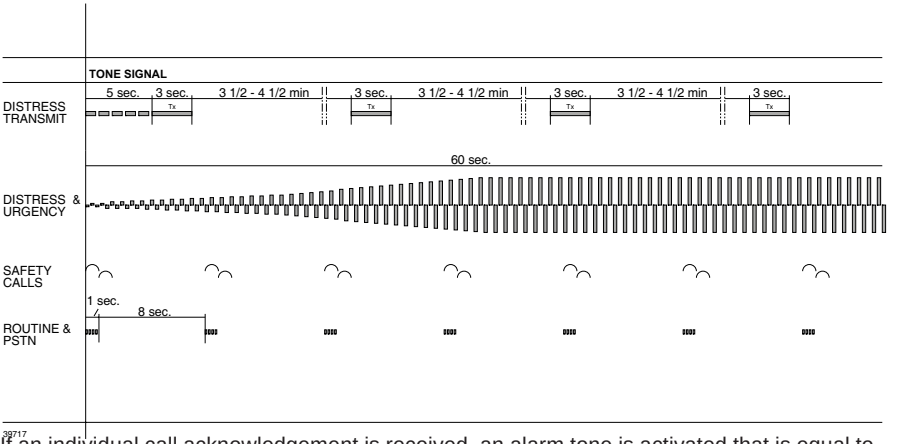

If an individual call acknowledgement is received, an alarm tone is activated that is equal to the alarm tone used for receiving a call request of the same type.

Calls that are not received as distress calls or calls with category distress or urgency will always engage the prescribed alarm sound. For any other DSC calls the call sound on reception can be enabled/disabled from a Setup menu **(4.3.2)**.

If you receive a call with an alarm sound, you will always be able to mute the alarm by pressing the button to be able to finish current radiotelephony call. This procedure will not affect the actual call accept procedure.

4.4 Working channel

A working channel will always be suggested by the system if a ship station or group is called for a routine call. The working channel is suggested by using the following procedure:

1. Select a random channel from the list of simplex channels
2. Scan channel for traffic (open squelch)
3. If the channel is free suggest the channel.
4. If the channel is busy restart from 1.

If no channels are found to be free within 1 second no channel is suggested.

4.5 Contact list

The contact list or phone book can contain up to 200 entries.

Each entry might contain:

- Station-, group-, coast station- or public name
- Station MMSI, group MMSI, coast MMSI and/or public phone number

The contact list can be reached from the Contacts menu (**2**).

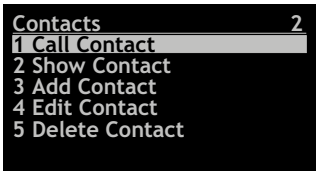

4.5.1 Calling a contact

It is possible to initiate the following calls from the Call Contact menu item (**2.1**):

- Individual station (ships or coast) routine radiotelephony calls
- Group routine calls
- Direct dial phone calls to a PSTN phone

Entering the Call Contact menu item will bring up a list of possible names to select. The name list is sorted alphabetically. The alphanumeric keypad can be used for quick search on the first letter in the contact name (using wheel mode). Selecting a contact will show data for the contact in question. Example:

When OK is pressed the appropriate call generator will be initialized, based on the data.

If a PSTN number exists for the selected contact the PSTN call flow is initiated. Therefore it is important the corresponding MMSI number for that contact being a coast station number. If only an MMSI number is present for the contact, a ship station, group or coast station call is initiated:

- If the MMSI number is a group number, the group call flow is entered from the window where a channel is selected.
- If a ship station number MMSI is available, the station call flow is entered from the window where a channel is selected.
- If the MMSI number is a coast station, the operator will be led to the transmit verification window for a station call.

4.5.1.1 Using the Contact list from the Call Sequences

Any call initiated from the DSC call menu that needs an MMSI number or PSTN number, might search and use that number from the Contact list. If “Search for Contact” is selected from anywhere in a call flow the contact search list is entered. Selecting the contact with OK will return to the corresponding MMSI/PSTN entry window in the call flow with the selected number information pre-filled.

4.5.2 Show contact

Via the menu item **2.2.** it is possible to search for a contact’s information without changing or initiate anything.

4.5.3 Adding a new contact

If you want to add a new contact to your list, go into menu item **2.3**. The following empty contact window will appear:

The focus bar is used to control what field the operator wants to put information into.
Example if OK is pressed:

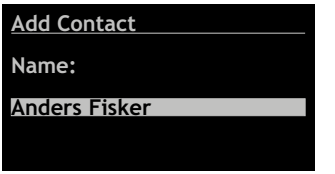

After having pressed OK the contact information looks as follows:

Proceed with the necessary data entries.
When finished move the focus bar to “Save contact” and press OK.

As a minimum a contact name and a valid MMSI number must be entered. If a PSTN number is entered the MMSI number for that contact must be a valid coast station MMSI number (00*).

See also Section 4.1.2

4.5.4 Editing the contact list

Any contacts from the list can be edited using a similar principle as described above using menu item **2.4**.

4.5.5 Deleting a Contact Entry

Any contact can be deleted from the contact list. If menu **2.5** is selected the contact can be searched for in the list. When found and selected with OK the contact will be removed from the contact list.

4.6 Settings for DSC

The following sections describe the settings that can be applied to different call types.

4.6.1 Special calls

The VHF is capable of supporting transmission of All Ships DSC urgency messages with second tele-commands:

- Medical transports
- Ships and Aircrafts

These settings can be changed only from the service interface. Reception of these calls is always possible.

If the VHF is configured for using these calls it will work in the following way:

- After powering up (normally) the VHF it will **not** be possible to use these call types (message: “Call type not enabled in VHF” if selected.)
- Each of the call types can be enabled via the menu **4.5.3.** (the filled square indicates the call type that is enabled).
- After enabling the call property can be added in an All Ships Urgency call sequence.

4.6.2 Automatic acknowledgement

The VHF can be set to automatic acknowledgement of the following calls:

- Safety position requests - Default disabled after power-up
- Safety test requests - Default enabled after power-up
- Routine polling requests - Default enabled after power-up

After power-up the behavior can be changed from menu **4.5.4**.
The automatic acknowledgement (if enabled) will take place without informing the operator. The calls are stored in the receive/transmit log. The operator might experience a short interruption in functionality while the automatic acknowledgement takes place (e.g. scanning, dual watch).

4.6.3 Automatic channel shift

The VHF can be set to automatically changing the working channel on receipt of the following call types:

- Individual radiotelephony acknowledgement with a valid channel information
- Radiotelephony group calls with valid channel information
- Radiotelephony all ship safety calls with valid channel information

The set-up is done via menu **4.5.5.** The setting will survive powering off the product.

If enabled, a received call will start the (normally) periodic alarm only once. The channel will switch immediately after and the window is closed.

The automatic channel shift is overruled (turned to manual acknowledgement - requiring press on OK or a hook-on to hook-off transition) if:

- Any handset is hooked off
- The received call cannot currently be presented on the information display (due to priority)

Distress calls and all ship calls with category distress or urgency will alert continuously until manually handled from the front panel.

4.7 Implicit behaviour for operations with DSC

This section describes assumptions and decisions made that are critical for correct functionality, but might be hidden to the operator in the display.

4.7.1 DSC transmission

All DSC calls are transmitted on channel 70 with a transmitter power of 25W. Distress, urgency and non-test safety calls are always transmitted. Other calls are sent only if the radio is not already recognizing a DSC message on channel 70.

4.7.2 Transmitting undesignated distress

Undesignated distress (solely created using the DISTRESS button) does not show any message prior to the actual transmission. The following message will be sent:

Format specifier: Distress (112)
Self-Id: <Your MMSI number>
Nature of distress: Undesignated (107)
Distress coordinates: Automatically inserted if position is available (e.g. from GPS), otherwise unknown (9999999999)
Time of position: Automatically inserted if time of position is available (e.g. from GPS), otherwise unknown (8888)
Subsequent communication: 100
EOS: 127

4.7.3 Verification of a DSC call before transmission

The final step in each DSC call sequence is the verification window, in which it is possible to verify the call you are about to transmit. The VHF will by default display only information that you could influence in the call setup. Example:

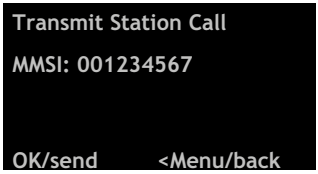

What is hidden to the user is that calls are formed according to the specifications ITU R.493-11.
For the example call (an individual station call request) the following information is not shown to the user:

- 1st tele-command: F3E/G3E Simplex TP
- EOS: Acknowledgement request (RQ = 117)

For all radiotelephony calls transmitted to all ships or to a group of ships:

- EOS: End Of Call (127)

Transmitted acknowledgement calls are not shown in any verification window before transmission. The acknowledgement of any received individual call request will be according to ITU R.493-11. The manipulation of the received call will be:

- Self-ID in the received call is used as address in the transmitted call
- Address in the received call is used as self-ID in the transmitted call
- EOS: Acknowledgement (BQ = 122)
- 1st tele-command might be changed to “Unable to Comply” (104) on operator’s request, stating the selected reason.

For all received or transmitted calls the full information can be retrieved from the DSC log.

4.7.4 Receiving DSC calls with errors

Distress calls will have an importance that high that even if they are received with errors they will, as far as possible, be received and displayed on the screen. If a call is received with errors this will be indicated with a “receive error” (REC ERR) marking next to the heading of the call. In this case the full integrity of the data is not to be trusted, and the handling possibilities (e.g. relaying the call with direct use of the received data) are limited by the equipment.

4.7.5 Priority of DSC versus VHF

If a situation occurs where there is a conflict between the VHF and the DSC functionality (for instance voice transmission on a working channel – using PTT, simultaneously with transmission of a DSC call), the DSC transmission will be prioritized. As a consequence the following VHF functions may need to be re-initiated if the DSC activity has occurred while these were active:

- Replay
- Scanning
- Dual watch
- PTT

A normal received DSC call request will appear on the screen as soon it is recognized on channel 70. This will not affect VHF radiotelephony before OK is pressed, unless automatic channel shift has been configureded (See chapter: Automatic channel shift:)

4.8 Radio configuration and settings

This section describes the configuration and settings possible to control from the operator front panel and this is not described elsewhere in this manual.
If your equipment needs configuration beyond these possibilities, you must call you dealer for special support.

4.8.1 Idle display

Whenever the radio is left in a state where the information/message display is not in use (pure radio communication mode), the information display will return to idle or stand-by mode. This will also be the case if the unit was left in a simple menu for 10 minutes.

The required and preferred default idle display is the one where position and time stored for DSC operation are shown along with the ship's identity (9-digit MMSI). This mode will always appear after start-up. The user might change the default display to be blank (zero illumination to minimize disturbance at night). To use this mode menu **(4.6.3)** select Idle Display . Pressing OK will toggle the blank display to be used.

If the blank display is selected for idle display, and the radio goes into activity mode, the idle mode will just leave the screen blank. To display the position and identity information quickly in this mode you can press the on/off button for a short time. This will show the information screen for 15 seconds before it turns off.

4.8.2 Notations for date and time

On the idle display and when the UTC radio time needs to be manually updated the notation for time entry is:

- yyyy/mm/dd hh:mm

In all logs (DSC logs and system logs)

- dd/mm hh:mm (in overview list)
- dd/mm-yy hh:mm:ss (in detail log descriptions)

The above notations are in force regardless of conventions that might traditionally be used in languages other than English.

4.8.3 Language

The RT5022/RT5020 is pre-programmed with a number of language packages. It is possible to change the overall text in the information/text display to a language different from the default language (English), by selecting the appropriate language in the Language menu (**4.6.4**). Only the languages shown in this menu are supported. New languages can only be distributed along with official software updates.
The RT5022/RT5020 is approved with the default language. Therefore the following mode of operation is implemented:

- If the product is turned off and on normally using the button, the default language will always be selected, regardless of the language mode before power-off.
- The following sequence will always put the unit back in default language mode (except when in distress state):

Technical abbreviations, such as, the four points of the compass (N, S, E and W), DSC symbol notations (Ack. RQ, Ack. BQ and EOS), etc. is attempted to be maintained as in the default language.

4.8.4 Privacy talk mode

It is possible to configure the radio to be used for a certain level of privacy. Privacy mode is only effective if the system is installed with CU5000 remote CU units.
In privacy mode all received voice (speaker and earpiece) will be muted to the CU5000 remote units when the handset is lifted on the transceiver (“OC” is displayed IN CU5000 display).
An incoming alarm sound will overrule privacy mode.
Privacy mode is enabled/disabled via menu **4.3.3**.

5 Errors and warnings

Errors and warnings are shown in the display accompanied by the sounds shown in the figure below:

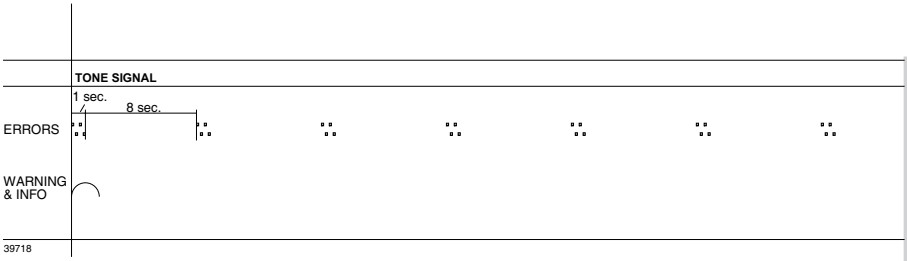

If you receive an error or warning message you will always be able to shut off the alarm. Press to finish on-going radiotelephony. This procedure will not affect the actual read-out and accept procedure for errors and warnings.

Errors and warning messages are shown in the information display. Examples of a warning can be a reminder to enter position manually each 4 hours, or that the GPS signal suddently is missing.

5.1 System event logging

Errors received as pop-up and information windows shall be logged in the event logging system for later read out. The error logs are accessed from menu **(5.1)**.
From menu 5.2 at least the following statistics are available:

- On time (<xxxx>d <yy>h <zz>m)
- Number of power failures
- Number of missing GPS situations
- Number of Tx activations
- Number of transmitted DSC calls

The information is read only on the front panel. Counters can be reset only from the service interface

5.2 Troubleshooting

If you doubt that your VHF system works properly, it is of great importance that you find the reason and assure that the equipment is properly serviced if any of the devices are failing.

You should contact your authorized dealer for tecnical support of your equipment. But, before you do that you can go through a list of actions to fix the problem by yourself and save time.

5.2.1.1 Ship power

In some installations ship power might occasionally disappear for a short time, e.g. if switching between land power or generator power. Your equipment will shut down immediately when power is failing. If the power does not arrive within 10 minutes the radio cannot be expected to start up automatically.

5.2.1.2 Fuses

If a press on the ON/OFF button does not turn on the radio, and ship power is present, a fuse might need replacement. The main fuse is located on the rear side of the radio. The shield is removed and the fuse is simply replaced with a new one.

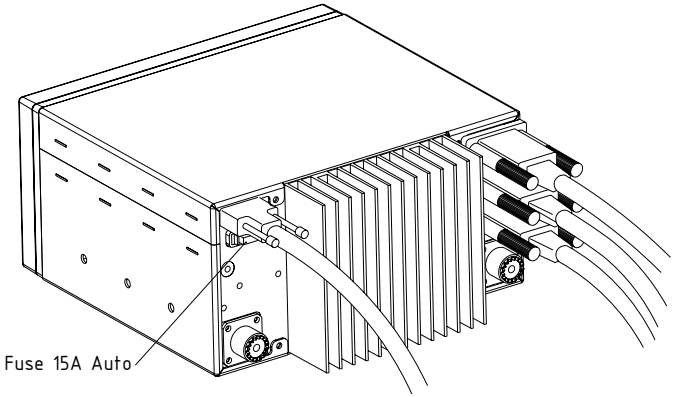

5.2.2 Self-test

Symptom: Radio operation is difficult.
It is possible to make a self-test of the equipment user interface. Any entry means and readouts can be verified in the self test. The test is executed from menu **6.**
If any of the following tests are failing you should contact your authorized dealer for service.

5.2.2.1 Key test

All push buttons can be checked using the self-test in menu **6.1**. Pressing or releasing any key on the front panel will be echoed in the graphic display. Only exception is DISTRESS and ON/OFF - which will maintain their functionality. These buttons can be pressed periodically for a short time to check that they are functional. Pressing ◀Menu twice will exit the test.

5.2.2.2 Display test

The information/message display is an LCD screen. A test of all pixels in the screen is executed in menu **6.2**. Triangles are shown in the display.

5.2.2.3 LED test

You can verify that all light indicators including the channel display can be lit. Running the LED test (**6.3**) will turn on all indicators for 2 seconds, where after these will return to their previous state.

5.2.2.4 Alarm and Audio Test

Entering this test item (**6.4**) will route the distress and urgency alarm sound to all speakers where this alarm is to be heard.

5.2.3 GPS

Sympton: Position requested.

If your radio is connected to a GPS and you receive a request in the display to enter position and time, then it is possibly that the GPS unit is either turned off, broken or disconnected. The GPS is connected on the rear side of the radio, either directly to the option connector or via connection box (see section Interface connections). Please refer to installation section of this manual for connection details.

Until GPS signal has been restored you must update the position manually as requested by VHF.

5.2.4 Accessory connection

Symptom: Some or all of the remote units do not work

First turn your VHF off and on. Turn all remote units on, if possible. Check status of the units by going into the Accessories menu 4.6.2. In this menu you can read the status of any connected device. If the status is “not found” for a particular device, it cannot be recognized by your VHF.

The communication to the remote units is taking place via a serial multi-drop bus connection on the rear side of the radio either directly to the SPARC II connector or via connection box and/or extension box (see section Interface connections).

If an alarm panel (AP4365) is connected please check there is a light in the red “VHF DISTRESS” button. If not, fuses in the alarm panel might need replacement before the serial bus is operational.

Communication problems will not affect the VHF unit functionality.

5.2.5 Device failure

If any of the checks descibed above does not explain or help to solve the problems you have discovered, the problem might be related to the unit itself. Now you must call the authorized workshop that will make the necessary repair. When you report that you need service for your device, you can inform your dealer about the problem you see and give the following information:

- VHF
- Serial Number - e.g. found via the menu item **4.6.1.2**
- Firmware version - reported via menu item **4.6.1.1**

5.2.6 Missing MMSI

Symptom: DSC function is not working.

If you have powered your VHF for the first time it might not have the MMSI number programmed. You must program the MMSI number before the radio is operational for DSC. Programming is done via menu item **4.5.1**

5.2.7 Radio time

Symptom: DSC logs are sorted with a wrong time stamp, or radio time is not correct.

The problem with a wrong radio time should occur only if the GPS is not connected in the system. A valid GPS time signal will update the UTC time that is used for time stamping logs only.

If you have a system without GPS, where you manually update position and time, it is also required that you enter the radio time - at least right after power-up, if you want to get correct time stamps on DSC logs. The UTC time is also used as the suggested time each time you are requested to enter position and time manually (every fourth hour).

5.2.8 Channel not free

5.2.8.1 DSC Channel not free

Symptom: DSC transmission is delayed

DSC calls that are not distress or urgency calls will not be sent if the VHF is in the middle of decoding a DSC call. The transmission will be delayed until decoding has been finished.

5.2.8.2 Working channel not free

Symptom: No suggested working channel in station call.

In a DSC station call a working channel is suggested. If for some reason a working channel is not found within 1 second, no channel is suggested. If you see this problem please check the following:

- Adjust to a higher squelch setting. If the squelch is always open, no free working call channels will be recognised as occupied.

6 Menu tree

This section lists the full menu tree of the VHF.

The table describes the un-regretted forward flow that is initiated after selection of certain menu items. Generally, pushing ◀Menu in the menu tree or flow sequence will return to the previous window.

MENU				
1 *DSC Call*	1.1 Station Call			
	1.2 PSTN Call			
	1.3 Group Call			
	1.4 Emergency	1.4.1 Compose Distress		
		1.4.2 Compose Urgency	1.4.2.1 All Ships	
			1.4.2.2 Individual	
		1.4.3 Compose Safety	1.4.3.1 All Ships	
			1.4.3.2 Individual	
		1.4.4 Compose Relay	1.4.4.1 Distress Relay	1.4.4.1.1 *All Ships*
				1.4.4.1.2 *Individual*
			1.4.4.2 Distress Relay Ack	
		1.4.5 Compose Distress Ack		
	1.5 DSC Logs	1.5.1 DSC Distress Log		
		1.5.2 DSC Receive Log		
		1.5.3 DSC Transmit Log		
2 *Contacts*	2.1 Call Contact			
	2.2 Show Contact			
	2.3 Add Contact			
	2.4 Edit Contact			
	2.5 Delete Contact			
3 *Scanning*	3.1 Scan All Channels			
	3.2 Scan Table A			
	3.3 Scan Table B			
	3.4 Scan Table C			
	3.5 Edit Scan Tables	3.5.1 Scan Table A		
		3.5.2 Scan Table B		
		3.5.3 Scan Table C		
4 *Settings*	4.1 Position & Time	4.1.1 Set Position & Time		
		4.1.2 Set Radio Time		
		4.1.3 Show Position		
	4.2 Display Contrast			
	4.3 Audio	4.3.1 Handset Volume		
		4.3.2 DSC Alarm Tones	4.3.2.1 Warning	4.3.2.1.1 *Low*
				4.3.2.1.2 *Medium*
				4.3.2.1.3 *High*
			4.3.2.2 Routine Call	4.3.2.2.1 *Mute*
				4.3.2.2.2 *Low*
				4.3.2.2.3 *Medium*
				4.3.2.2.4 *High*
			4.3.2.3 Safety Call	4.3.2.3.1 *Mute*
				4.3.2.3.2 *Low*
				4.3.2.3.3 *Medium*
				4.3.2.3.4 *High*
		4.3.3 Privacy Mode	☐ Enable Privacy	
			☐ Disable Privacy	

System

4 ***Settings***	**4.4 Channels**	**4.4.1 Channel Mode**	**4.4.1.1** Int		
			4.4.1.2 US		
			4.4.1.3 BI		
			4.4.1.4 CAN		
		4.4.2 Channel Info			
		4.4.3 ATIS Call sign			
	4.5 DSC	**4.5.1 MMSI Number**			
		4.5.2 Group MMSI			
		4.5.3 Special Calls	☐ Medical Transports		
			☐ Ships and Aircrafts		
		4.5.4 Auto Acknowledgement	☐ Safety Test		
			☐ Routine Polling		
			☐ Safety Position		
		4.5.5 Auto Channel Switch	☐ RT acknowledgement		
			☐ Group Calls		
			☐ All Ships Safety Calls		
		4.5.6 MMSI Sub-address	**4.5.6.1** Value of X10 digit		
			4.5.6.2 X10=0 mode	☐ *Acknowledge Non-zero*	
				☐ *Acknowledge Zero*	
				☐ *Reject Call*	
	4.6 System	**4.6.1 Device Identification**	**4.6.1.1** SW Version		
			4.6.1.2 Serial Number		
		4.6.2 Accessories	**4.6.2.1** Alarm Panel		
			4.6.2.2 GPS		
			4.6.2.3 LAN Interface		
			4.6.2.4 Printer		
			4.6.2.5 Optional Handsets		
		4.6.3 Idle Display	☐ Blank Display		
		4.6.4 Language	☐ English		
			☐ Dansk		
			☐ Italiano		
5 ***System Log***	**5.1 Errors**				
	5.2 Statistics				
6 ***Self Test***	**6.1 Key Test**				
	6.2 Display Test				
	6.3 LED Test				
	6.4 Alarm Test				

Optional functional devices

The maximum system configuration possible with your VHF installation with VHF is shown in the first part of the installation section.

The present chapter will describe the functionality and behaviour of the following optional functional devices:

- 1 or 2 remote handset control units
- One alarm panel
- Printer + LAN interface + printer server

7.1 Semi-functional control unit

The semi-functional control unit CU5000 is an optional unit connecting an additional remote handset to the VHF. Installation of control units should be performed only by an authorized service person.

7.1.1 Controls and indicators

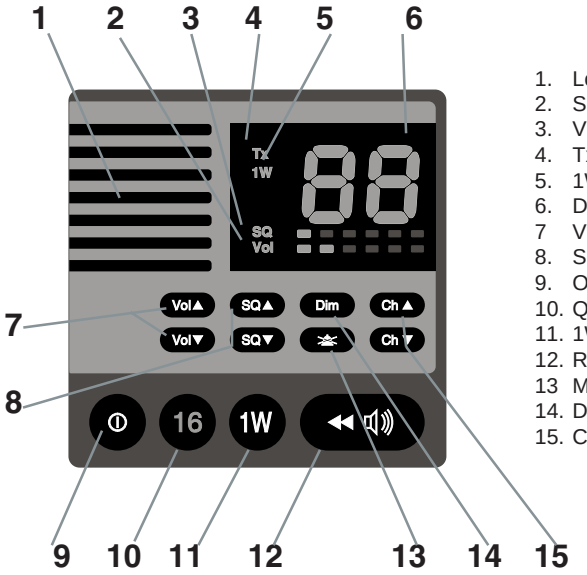

1. Loudspeaker
2. Squelsh level indicator
3. Volume level indicator
4. Tx
5. 1W
6. Display
7 Volume up/down
8. Squelch up/down
9. ON/OFF
10. Quick-select key for channel 16.
11. 1W
12. Replay push button
13 Mute alarm
14. Dimming
15. Channel up/down

7.1.2 Operation

The optional handset is intended for VHF radiotelephony only. There will be no DSC functionality supported except for:

- The functionality or lifting of the CU handset follows the default handset on the main radio (see Section **DSC receive**), when receiving a DSC call.
- Possibility to mute DSC alarm sound – not to handle the DSC call.

7.1.3 ON/OFF

The semi-intelligent handset will always be turned off default after VHF unit is powered. The off state is indicated by no activity or light in the CU.

The unit can be turned on and off (press for 1 second) on the ON button.
If the main unit is powered off the handset control unit is always turned off.

7.1.4 Channel selection

Channel selection is done by using exactly the method as described for VHF by using ▲ and ▼.
On the optional handset control unit these buttons are marked Ch▲ and Ch▼ respectively.

Channel change requests are sent to the main VHF unit, and the main VHF unit will change channel and update the CU display. The same channel number will be applied to all the displays in the system.

A quick channel 16 selection is available by pressing 16.

7.1.5 Volume

The volume is controlled by using the Vol▲ and Vol▼ buttons.
Pressing these buttons will affect only the internal CU speaker as well as optionally connected external CU speakers. The volume adjustment will be active only for the specific local handset. Therefore the volume bar on the main VHF unit is not updated during adjustment.

A local volume indicator always shows the speaker volume on the CU. If the volume is adjusted to the mute level the VOL LED will flash (1 Hz).

The earpiece volume in the handset connected to the CU is adjusted using the Vol▲ and Vol▼ buttons while holding down the button.
This alternative usage of the button will be possible only when:

- The handset is hooked off, and
- No active alarm sound to be muted

After power-up all volume levels set during the last operation are restored as they were before power-down.

7.1.6 Squelch

The squelch level can be adjusted by using the SQ▲ and SQ▼ buttons.

Pressing the buttons will contribute to the global squelch setting on the radio. Squelch indicators on the handset CU and on the main unit will always follow each other regardless of the control input used for adjustment.

NOTE: If a channel is reached where the squelch setting was programmed from the main unit, usage of the squelch control will set the level for that particular channel, and reset the squelch programming.

7.1.7 Dimming

Dimming the control unit display and keypad backlight and 1W LED is done exactly as described for the VHF, but with no graphical information.

7.1.8 Receiving a DSC call

If a DSC call is received the following will show on the CU channel display depending of the call type:

alternating

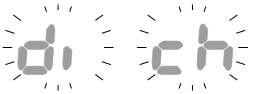

... If an active distress call was received (changing with 1Hz).

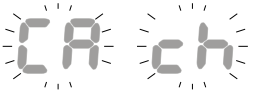

... If a routine call was received

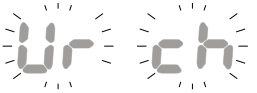

... If an urgency call is received.

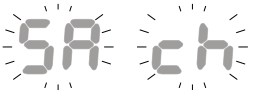

... If an safety call is received.

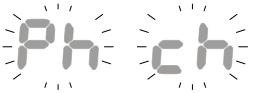

... If an PSTN call is received.

Normal radiotelephony calls can be acknowledged from the semi-intelligent handset making the HS hooked to HS un-hooked transition.
If an error or warning occurs the following is displayed:

alternating

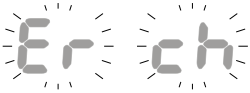

... on errors.

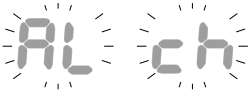

... on alerts.

This indication will remain until the DSC call has been handled from the main unit. Though normal radiotelephony calls can be acknowledged from the semi-intelligent handset making the HS hooked to HS un-hooked transition.

7.1.9 Muting alarms

If a DSC call is received (distress or routine) the alarm sound is heard as a mixing of the received voice audio in the speakers and earpieces in the system. Pressing the button will mute any alarm sound in the system, and only received voice is heard in the speakers.

7.1.10 Transmitter power

Pressing the 1W button will have the same effect as described for VHF. 1W LED on CU will follow the 1W LED on the main unit.

7.1.11 Replay

The replay facility works exactly the same way as described for the main VHF unit when the

button is pressed.

The navigator counter (seconds back in received signal) is shown on the CU display.

7.1.12 Dual watch and scanning

There are no possibilities of controlling dual watch or scanning. During dual watch initiated from the main VHF the working channel is displayed in the display. During scanning the display is indicating this by “SC”.

Locking on any channel will, of course, switch the display to that channel.

7.1.13 Multiple handsets in the system

If multiple handsets are connected in the system the following priority is given (to PTT – microphone control) if multiple handsets are lifted:

- The default handset is always given priority if lifted.
- Any optional handset lifted first takes priority over another optional handset.

A warning “OC” is written in the display near any handset (VHF unit or CU) that has lower priority, as soon the prioritized handset is lifted.

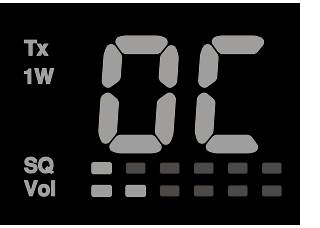

If an optional handset is not given priority (“OC” written in display) it will be possible to use only the following buttons on the CU:

7.1.14 Optional handset CU VHF operation while main unit is in menu or text entry mode

If the main VHF unit is operated in menu or text entry mode, there will be certain buttons on the VHF main unit that do not respond to their primary functions. Seen from a CU perspective all functionality is maintained if “OC” is not shown in the telephone display.

7.2 Alarm panel

The alarm panel AP4365 will – if connected correctly to the VHF - be illuminated in the red “VHF DISTRESS” push button.

7.2.1 Distress initiation

Only undesignated distress can be sent from the alarm panel.

The distress is sent by lifting the lid over the VHF DISTRESS button on the alarm panel and pressing the button for 5 seconds. A sound is heard each second. After 5 seconds a constant sound is heard, indicating that you have sent the distress. You can now release the button. The alarm sound in the alarm panel can be muted by pressing the on the alarm panel.

The VHF is now in distress mode. You must now continue the distress traffic and procedures from the front panel of your VHF, if possible. The procedures are now the same as described for handling distress mode from the main unit.Maritime channels

8 Maritime Channels

8.1 International channels

Channels	TX MHz	RX MHz	SIMPLEX Intership	SIMPLEX Port	DUPLEX Port	DUPLEX Public
1	156,050	160,650			●	●
2	156,100	160,700			●	●
3	156,150	160,750			●	●
4	156,200	160,800			●	●
5	156,250	160,850			●	●
6	156,300	156,300	●			
7	156,350	160,950			●	●
8	156,400	156,400	●			
9	156,450	156,450	●	●		
10	156,500	156,500	●	●		
11	156,550	156,550		●		
12	156,600	156,600		●		
13	156,650	156,650	●	●		
14	156,700	156,700		●		
15	156,750	156,750	●	●		
16	156,800	156,800	**Distress and calling**			
17	156,850	156,850	●	●		
18	156,900	161,500			●	●
19	156,950	161,550			●	●
20	157,000	161,600			●	●
21	157,050	161,650			●	●
22	157,100	161,700			●	●
23	157,150	161,750			●	●
24	157,200	161,800			●	●
25	157,250	161,850			●	●
26	157,300	161,900			●	●
27	157,350	161,950			●	●
28	157,400	162,000			●	●

Channels	TX MHz	RX MHz	SIMPLEX Intership	SIMPLEX Port	DUPLEX Port	DUPLEX Public
60	156,025	160,625			●	●
61	156,075	160,675			●	●
62	156,125	160,725			●	●
63	156,175	160,775			●	●
64	156,225	160,825			●	●
65	156,275	160,875			●	●
66	156,325	160,925			●	●
67	156,375	156,375	●	●		
68	156,425	156,425		●		
69	156,475	156,475	●	●		
70	156,525	156,525	**DSC**	**DSC**		
71	156,575	156,575		●		
72	156,625	156,625	●			
73	156,675	156,675	●	●		
74	156,725	156,725		●		
75	156,775	156,775		● L)		
76	156,825	156,825		● L)		
77	156,875	156,875	●			
78	156,925	161,525			●	●
79	156,975	161,575			●	●
80	157,025	161,625			●	●
81	157,075	161,675			●	●
82	157,125	161,725			●	●
83	157,175	161,775			●	●
84	157,225	161,825			●	●
85	157,275	161,875			●	●
86	157,325	161,925			●	●
87	157,375	157,375		● *)		
88	157,425	157,425		● *)		

Channels

Notes:

L) 1W TX power

***)** Channel 87 and 88 became simplex channels following the instruction of Automatic Identification channels AIS1 at 161.975MHz and AIS2 on 162.025MHz.

NB! The RX and TX frequencies can be read from menu (4.4.2).

8.2 US channels

Channels	TX MHz	RX MHz	SIMPLEX	DUPLEX
1	156,050	156,050	●	
2				B)
3	156,150	156,150	● !)	
4				B)
5	156,250	156,250	●	
6	156,300	156,300	●	
7	156,350	156,350	●	
8	156,400	156,400	●	
9	156,450	156,450	●	
10	156,500	156,500	●	
11	156,550	156,550	●	
12	156,600	156,600	●	
13	156,650	156,650	● L)	
14	156,700	156,700	●	
15		156,750	● RX)	
16	156,800	156,800	Distress and calling	
17	156,850	156,850	●	
18	156,900	156,900	●	
19	156,950	156,950	●	
20	157,000	157,000	●	
21	157,050	157,050	● !)	
22	157,100	157,100	●	
23	157,150	157,150	● !)	
24	157,200	161,800		●
25	157,250	161,850		●
26	157,300	161,900		●
27	157,350	161,950		●
28	157,400	162,000		●

Channels	TX MHz	RX MHz	SIMPLEX	DUPLEX
60				B)
61	156,075	156,075	● !)	
62				B)
63	156,175	156,175	●	
64	156,225	156,225	● !)	
65	156,275	156,275	●	
66	156,325	156,325	●	
67	156,375	156,375	● L)	
68	156,425	156,425	●	
69	156,475	156,475	●	
70	156,525	156,525	DSC	
71	156,575	156,575	●	
72	156,625	156,625	●	
73	156,675	156,675	●	
74	156,725	156,725	●	
75			B)	
76			B)	
77	156,875	156,875	● L)	
78	156,925	156,925	●	
79	156,975	156,975	●	
80	157,025	157,025	●	
81	157,075	157,075	● !)	
82	157,125	157,125	● !)	
83	157,175	157,175	● !)	
84	157,225	161,825		●
85	157,275	161,875		●
86	157,325	161,925		●
87	157,375	157,375	● *)	
88	157,425	157,425	● *)	

Channels	WX	RX MHz
P0	WX1	162,550
P1	WX2	162,400
P2	WX3	162,475
P3	WX4	162,425
P4	WX5	162,450
P5	WX6	162,500
P6	WX7	162,525
P7	WX8	161,650
P8	WX9	161,775
P9	WX10	163,275

Notes:

L) 1 W TX power. Channels 13, 67 and 77 are limited to low transmission power.

B) Channels 2, 4, 60, 62, 75 and 76 cannot be selected in US mode.

!) Channels 3, 21, 23, 61, 64, 81, 82 and 83 may be legally used in some circumstances but not by the general public in US waters.

RX) Only RX: transmissions are blocked.

NB! The RX and TX frequencies can be read from menu **(4.4.2)**.

***)** Channels 87 and 88 became simplex channels following the introduction of Automatic Identification channels AIS1 at 161.975MHz and AIS2 on 162.025MHz.

8.3 BI channels

Channels	TX MHz	RX MHz	SIMPLEX Intership	SIMPLEX Port	DUPLEX Port	DUPLEX Public
1	156,050	160,650			●	●
2	156,100	160,700			●	●
3	156,150	160,750			●	●
4	156,200	160,800			●	●
5	156,250	160,850			●	●
6	156,300	156,300	● L)			
7	156,350	160,950			●	●
8	156,400	156,400	● L)			
9	156,450	156,450	●	●		
10	156,500	156,500	● L)	● L)		
11	156,550	156,550		● L)		
12	156,600	156,600		● L)		
13	156,650	156,650	● L)	● L)		
14	156,700	156,700		● L)		
15	156,750	156,750	● L)	● L)		
16	156,800	156,800	**Distress and calling**			
17	156,850	156,850	● L)	● L)		
18	156,900	161,500			●	●
19	156,950	161,550			●	●
20	157,000	161,600			●	●
21	157,050	161,650			●	●
22	157,100	161,700			●	●
23	157,150	161,750			●	●
24	157,200	161,800			●	●
25	157,250	161,850			●	●
26	157,300	161,900			●	●
27	157,350	161,950			●	●
28	157,400	162,000			●	●

Channels	TX MHz	RX MHz	SIMPLEX Intership	SIMPLEX Port	DUPLEX Port	DUPLEX Public
60	156,025	160,625			●	●
61	156,075	160,675			●	●
62	156,125	160,725			●	●
63	156,175	160,775			●	●
64	156,225	160,825			●	●
65	156,275	160,875			●	●
66	156,325	160,925			●	●
67	156,375	156,375	●	●		
68	156,425	156,425		●		
69	156,475	156,475	●	●		
70	156,525	156,525	**DSC**	**DSC**		
71	156,575	156,575		● L)		
72	156,625	156,625	● L)			
73	156,675	156,675	●	●		
74	156,725	156,725		● L)		
75	156,775	156,775		● L)		
76	156,825	156,825		● L)		
77	156,875	156,875	● L)			
78	156,925	161,525			●	●
79	156,975	161,575			●	●
80	157,025	161,625			●	●
81	157,075	161,675			●	●
82	157,125	161,725			●	●
83	157,175	161,775			●	●
84	157,225	161,825			●	●
85	157,275	161,875			●	●
86	157,325	161,925			●	●
87	157,375	157,375		● *)		
88	157,425	157,425		● *)		

Notes:

L) 1W TX power on channels 6, 8, 10, 11, 12, 13, 14, 15, 17, 71, 72, 74 , 75, 76 and 77.

***)** Channels 87 and 88 became simplex channels following the introduction of Automatic Identification channels AIS1 at 161.975MHz and AIS2 on 162.025MHz.

NB! The ATIS function is enabled on all channels. RX and TX frequencies can be read using menu **(4.4.2)**.
Dual Watch & Scanning modes are disabled.

8.4 CA channels

Channels	TX MHz	RX MHz	SIMPLEX	DUPLEX
1	156,050	160,650		●
2	156,100	160,700		●
3	156,150	160,750		●
4				B)
5	156,250	156,250	●	
6	156,300	156,300	● !)	
7	156,350	156,350	●	
8	156,400	156,400	● !)	
9	156,450	156,450	●	
10	156,500	156,500	●	
11	156,550	156,550	●	
12	156,600	156,600	●	
13	156,650	156,650	●	
14	156,700	156,700	●	
15	156,750	156,750	● L)	
16	156,800	156,800	**Distress and calling**	
17	156,850	156,850	● L)	
18	156,900	156,900	●	
19				B)
20	157,000	161,600		● L)
21		161,650	● RX)	
22				B)
23	157,150	161,750		●
24	157,200	161,800		●
25		161,850	● RX)	
26	157,300	161,900		●
27	157,350	161,950		●
28		162,000	● RX)	

Channels	TX MHz	RX MHz	SIMPLEX	DUPLEX
60	156,025	160,625		●
61				B)
62				B)
63				B)
64	156,225	160,825		●
65	156,275	156,275	● L)	
66	156,325	156,325	● L)	
67	156,375	156,375	● !)	
68	156,425	156,425	●	
69	156,475	156,475	●	
70	156,525	156,525	**DSC**	
71	156,575	156,575	●	
72	156,625	156,625	● !)	
73	156,675	156,675	● !)	
74	156,725	156,725	●	
75			B)	
76			B)	
77	156,875	156,875	● L)	
78	156,925	156,925	●	
79	156,975	156,975	●	
80	157,025	157,025	●	
81				B)
82				B)
83		161,775	● RX)	
84	157,225	161,825		●
85	157,275	161,875		●
86	157,325	161,925		●
87	157,375	157,375	● *)	
88	157,425	157,425	● *)	

Channels	WX	RX MHz
P0	WX1	162,550
P1	WX2	162,400
P2	WX3	162,475

Notes:

L) 1 W TX power. Channels 15, 17, 20, 65, 66 and 77 are limited to 1W transmission power.

B) Channels 4, 19, 22, 61, 62, 63, 81 and 82 cannot be selected in CA mode.

!) Channels 6, 8, 23, 67, 72 and 73 may be legally used in some circumstances but not by the general public in CA waters.

RX) Only RX: transmission is blocked.

NB! The RX and TX frequencies can be read from menu **(4.4.2)**.

***)** Channels 87 and 88 became simplex channels following the introduction of Automatic Identification channels AIS1 at 161.975MHz and AIS2 on 162.025MHz.

9 Installation

9.1 Mounting possibilities

VHF with mounting bracket

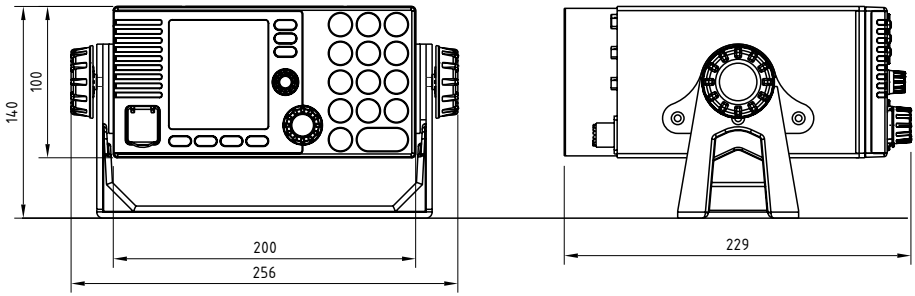

Mounting option

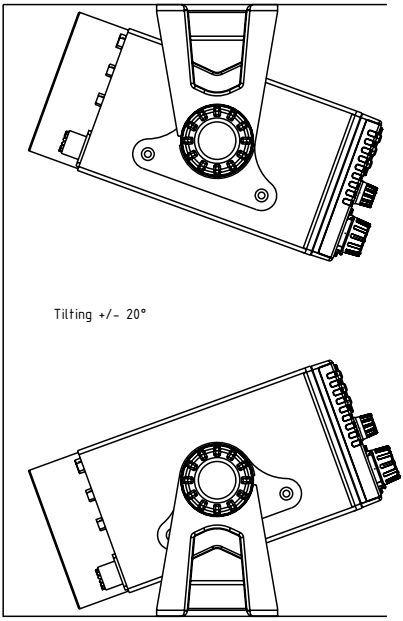

Drilling plan

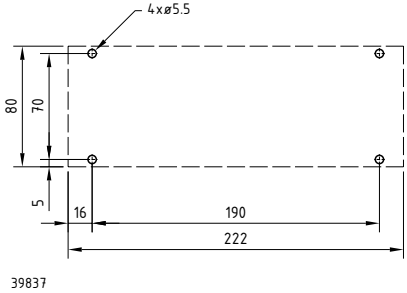

Weight (RT5022):

VHF	4.1 kg
Mounting bracket	1.0 kg

Weight (RT5020):

VHF	4.9 kg
Mounting bracket	1.0 kg

VHF with flush mounting bracket

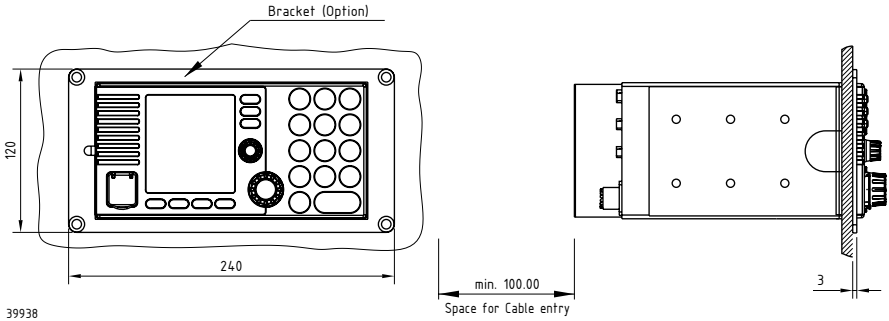

Drilling plan

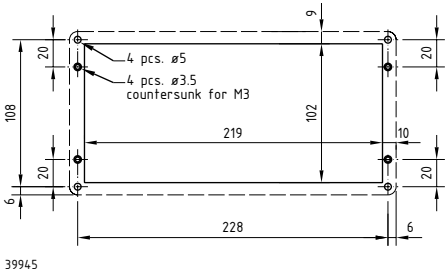

Weight:
Mounting kit
(Part no. 739814) 1 kg

WARNING:
Only use screws supplied with mounting kit for attaching flush mounting bracket to VHF radio.

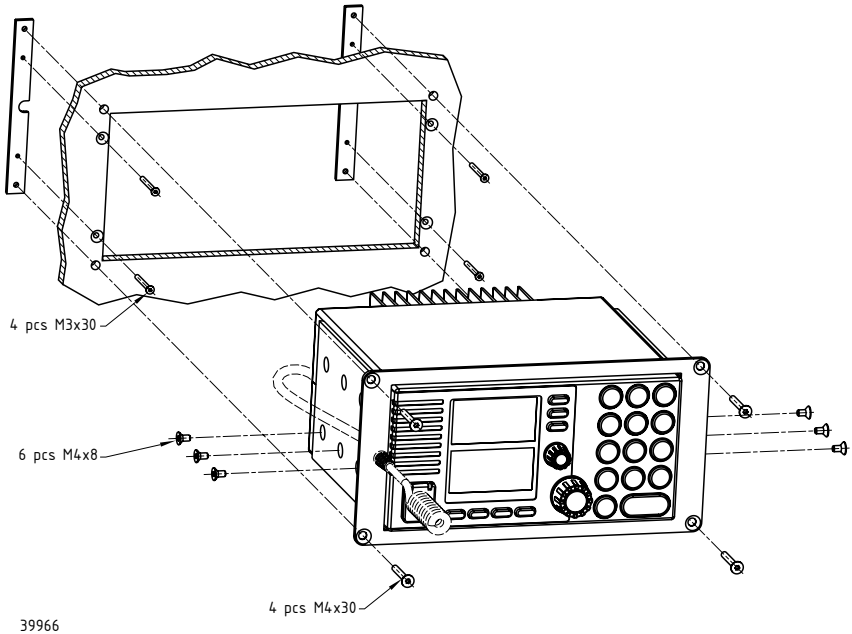

Handset for transceiver

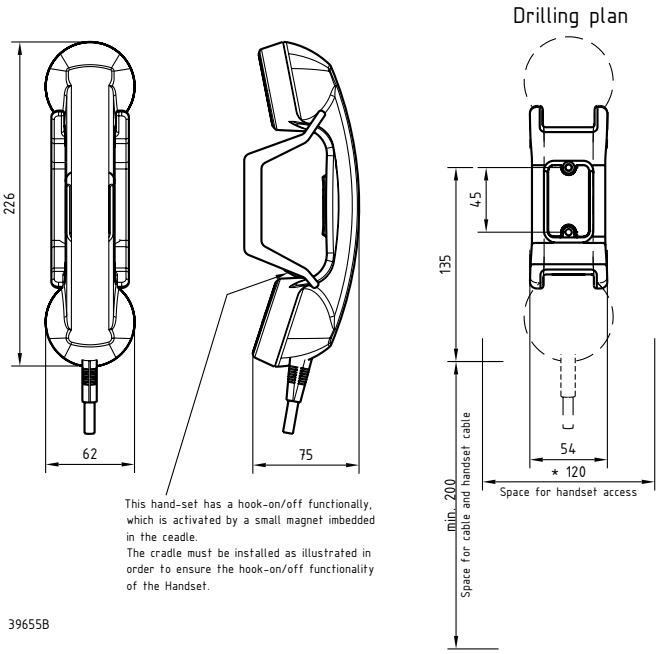

Weight

Handset for transceiver 0.4 kg

Installation

Semi-functional control unit

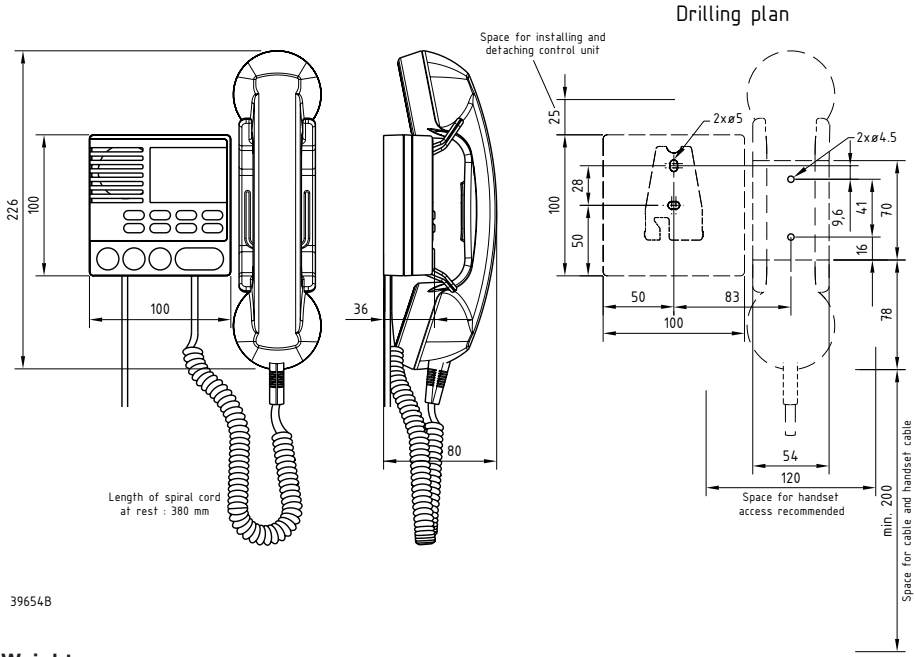

Weight :
Semi-functional control unit 1.2 kg

Installing a single CU
After the CU is connected the unit can be operated straight away without any configuring.

Installation with 2 CUs
If an installation is carried out providing 2 new CUs, it is important when powering these up for the first time, that this is done sequentially, to allow the CUs to acquire their individual identity on the SPARC II bus:

2 newly installed CUs:
- Power on VHF
- Power on first CU
- Power on second CU

If an additional CU is installed in a system already working with a single CU, the already existing CU must be switched on prior to the first power-on of the new CU.

Adding a CU in an installation already providing one CU:
- Power on VHF
- Power on the existing CU
- Power on the newly installed CU

This procedure is also followed if a CU is moved from another installation to this installation. Always turn on the existing CU before turning on the last acquired one - when powering for the first time after installation.

Connection box

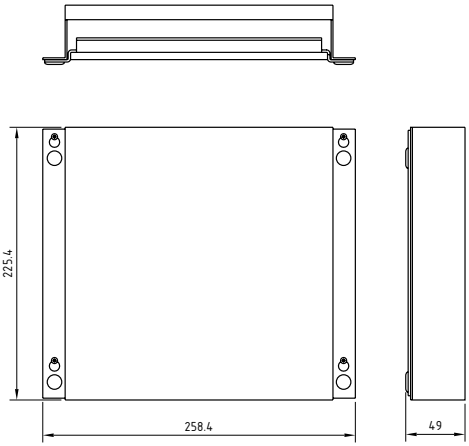

Drilling plan

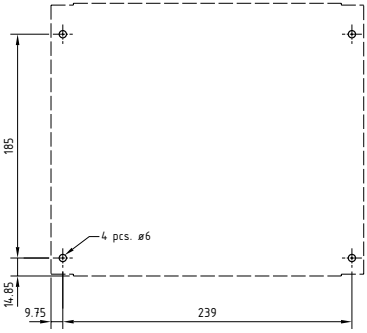

Mounting

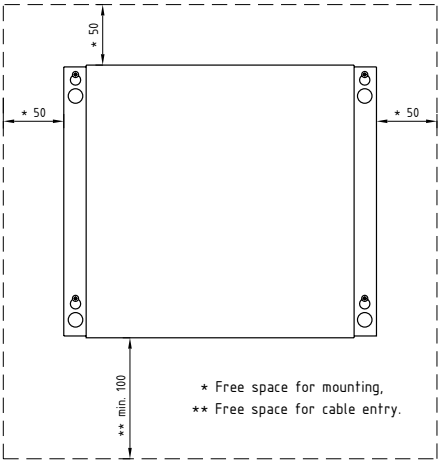

39656

Weight

Connection box 1.7 kg

Extension box

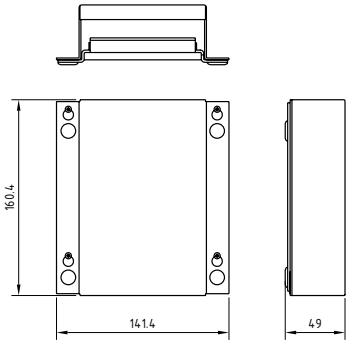

Drilling plan

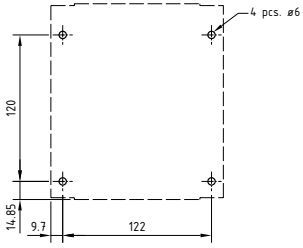

Mounting

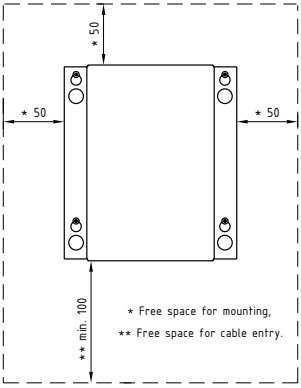

39657

Weight
Extension box 0.7 kg

LAN box

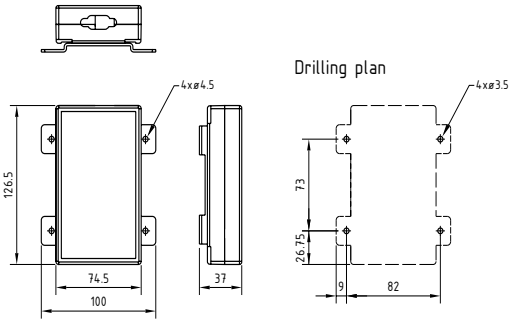

Mounting

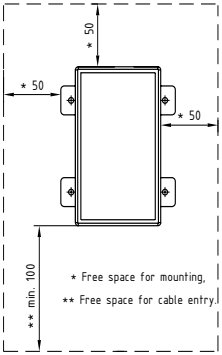

39658

Weight

LAN box	0.3 kg

Installation

9.2 Interface connections

VHF (rear view)

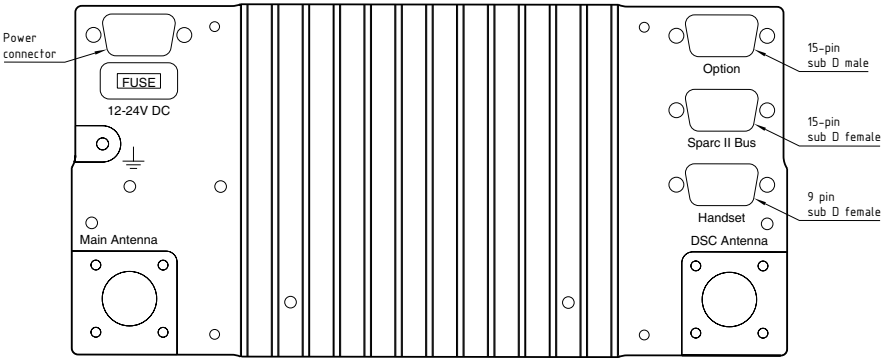

39815A

Connection box board 639121

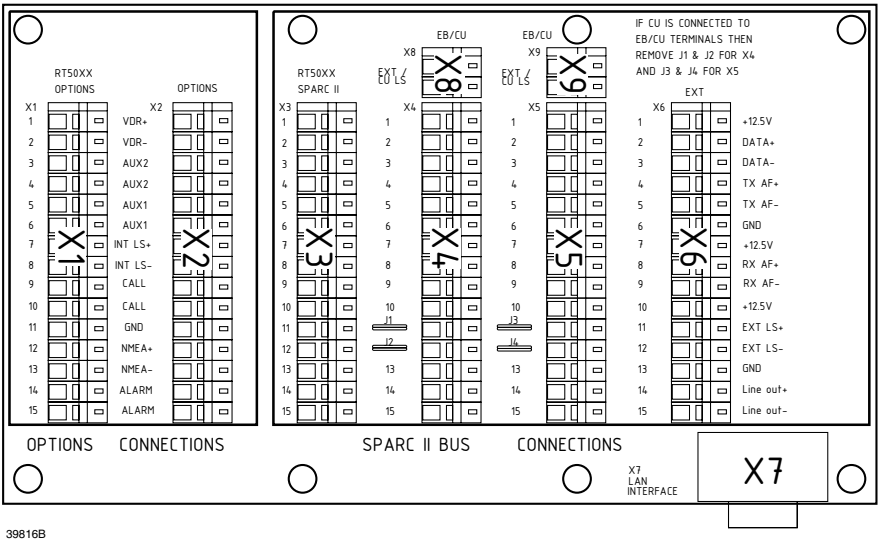

39816B

Extension box board 639123

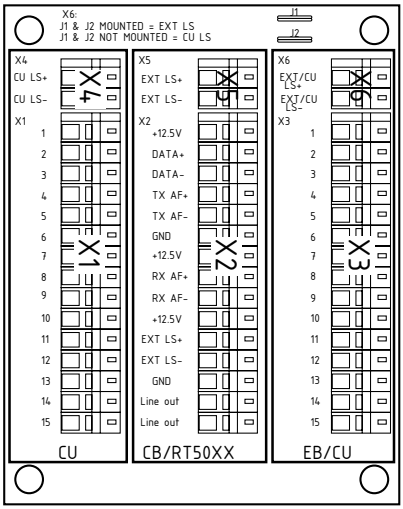

39817B

9.2.1 System block diagram with connection box and 2 x extension box

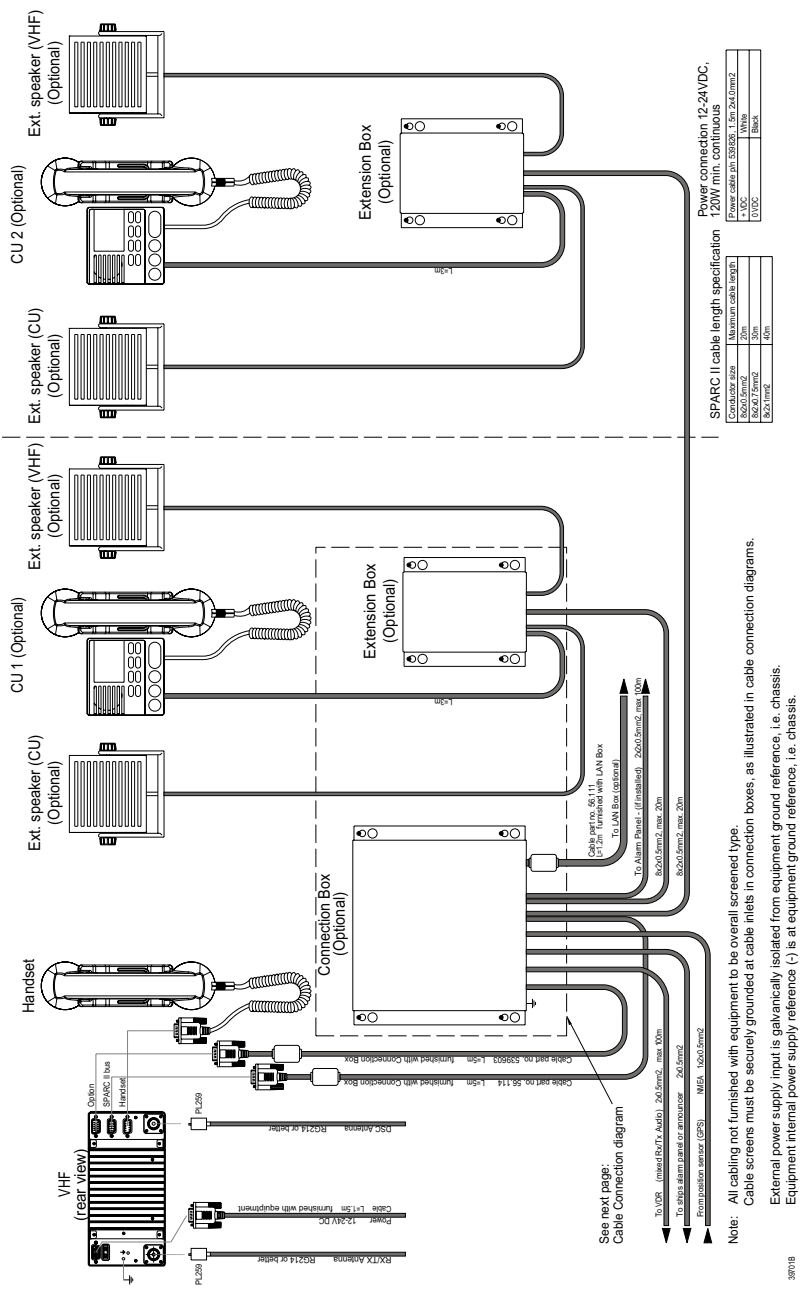

Cable connection diagram

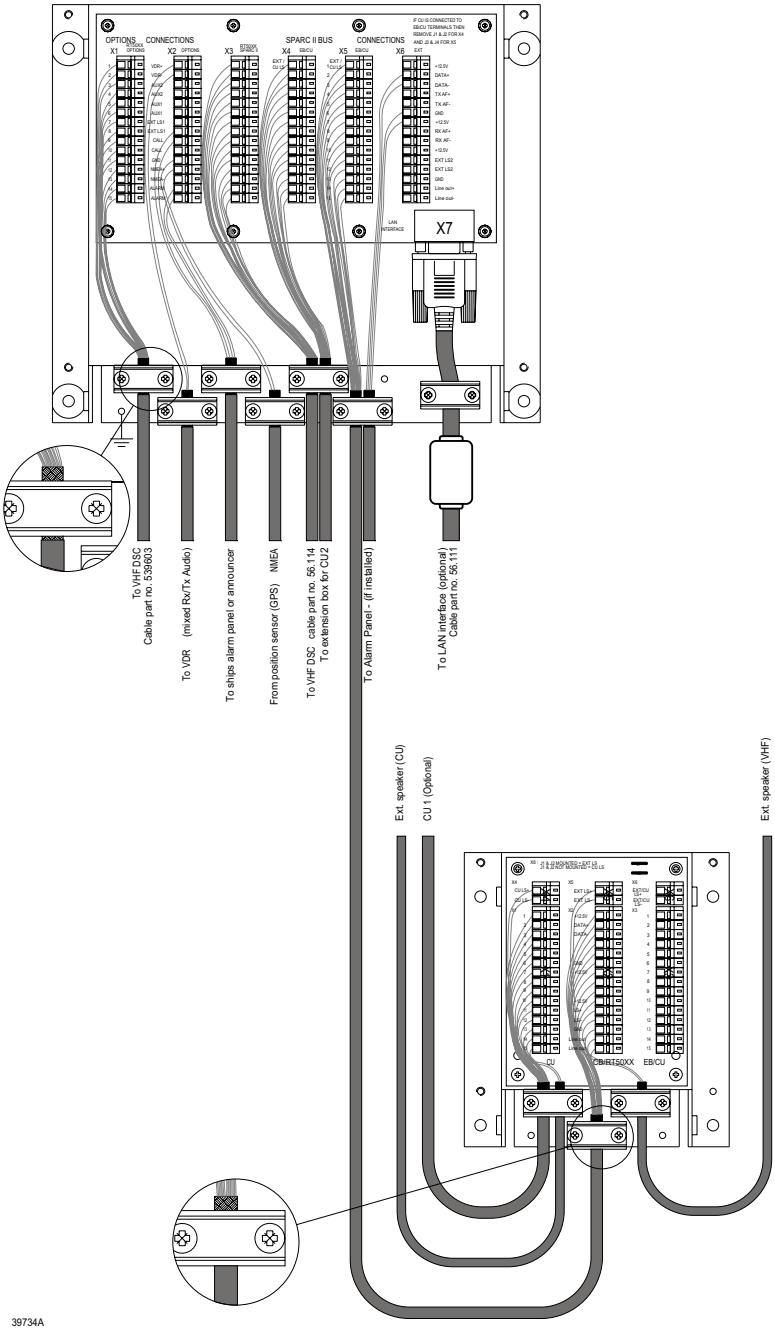

Installation

Interfaces

Options Connections

VHF Options connector 15-pin D-sub male	Signal designation	Cable p/n 539603 5m	Connection box In from VHF	Connection box External conn.	Signal description	Ships cable 8 twisted pairs overall screen	or
pin 1	VDR+	Brn	X1-1	X2-1	Mixed Rx/Tx audio output for recording. Galvanically isolated, balanced signal, 0dBm into 600Ω	pair no. 1	Correspondingly grouped individual cabling
pin 2	VDR-	Brn/Wht	X1-2	X2-2		pair no. 1	
pin 3	AUX2	Orange	X1-3	X2-3	Relay contact closing on event pre-defined through service programming (see note 1)	pair no. 2	
pin 4	AUX2 NO	Orange/Wht	X1-4	X2-4		pair no. 2	
pin 5	AUX 1	Blue	X1-5	X2-5	Relay contact closing on event pre-defined through service programming (see note 1)	pair no. 3	
pin 6	AUX 1 NO	Blue/Wht	X1-6	X2-6		pair no. 3	
pin 7	int_Speaker +	Grn	X1-7	X2-7	VHF internal speaker output, nom. 5W into 8Ω.	pair no. 4	
pin 8	int_Speaker -	Grn/Wht	X1-8	X2-8		pair no. 4	
pin 9	DSC CALL	Red	X1-9	X2-9	Relay contact closing on incoming DSC call (see note 1)	pair no. 5	
pin 10	DSC CALL NO	Red/Wht	X1-10	X2-10		pair no. 5	
pin 11	GND	Blk+Blk/Wht	X1-11	X2-11	Equipment ground	pair no. 8	
pin 12	NMEA +	Yel	X1-12	X2-12	NMEA data input from external position sensor (see note 2)	pair no. 6	
pin 13	NMEA -	Yel/Wht	X1-13	X2-13		pair no. 6	
pin 14	DSC ALARM	Purple	X1-14	X2-14	Relay contact closing on incoming Distress alert (see note 1)	pair no. 7	
pin 15	DSC ALARM NO	Purple/Wht	X1-15	X2-15		pair no. 7	
Housing		Screen	Chassis	Chassis		Screen	Screens

Note 1: Relay contact ratings (resistive load)

Max. switched power: 30W or 60VA
Max. switched current: 1.0A
Max. switched voltage: 150VDC or 125VAC

Note 2: Following NMEA sentences are supported: GLL, RMC, ZDA, GGA, VTG, GNS in accordance with IEC61162-1

SPARC II Connections

VHF SPARC II connecto 15-pin D-sub female	Signal designation	Cable p/n 56.114	Extension box In from VHF or conn. Box	Extension box Out to CU1	Cable integrated with CU	Extension box Out to CU2	Signal description	Ships cable 8 twisted pairs overall screen
pin 1	12.5VDC+	Red/Wht	X2-1	X1-1	Red/Wht	X3-1	Power to CUs	pair no. 8
pin 2	DATA_+	Yel	X2-2	X1-2	Yel	X3-2	SPARC II-bus Data	pair no. 1
pin 3	DATA_-	Yel/Blk	X2-3	X1-3	Yel/Blk	X3-3		pair no. 1
pin 4	TX_AF+	Blu/Wht	X2-4	X1-4	Blu/Wht	X3-4	SPARC II-bus Tx audio	pair no. 2
pin 5	TX_AF-	Blu	X2-5	X1-5	Blu	X3-5		pair no. 2
pin 6	GND	Orange + Red	X2-6	X1-6	Orange + Red	X3-6	Equipment ground	pair no. 6 & 8
pin 7	12.5VDC+	Orange/Wht	X2-7	X1-7	Orange/Wht	X3-7	Power to CUs	pair no. 6
pin 8	RX_AF+	Grn/Wht	X2-8	X1-8	Grn/Wht	X3-8	SPARC II-bus Rx audio	pair no. 3
pin 9	RX_AF-	Grn	X2-9	X1-9	Grn	X3-9		pair no. 3
pin 10	12.5VDC+	Blk/Wht	X2-10	X1-10	Blk/Wht	X3-10	Power to CUs	pair no. 7
pin 11	EXT.Speaker +	Brn	X2-11	X1-11	Brn	X3-11	VHF radio external speaker output, nom. 5W into 8Ω	pair no. 4
pin 12	EXT.Speaker -	Brn/Wht	X2-12	X1-12	Brn/Wht	X3-12		pair no. 4
pin 13	GND	Blk	X2-13	X1-13	Blk	X3-13	Equipment ground	pair no. 7
pin 14	Lineout +	Purple	X2-14	X1-14	Purple (**NC**)	X3-14	Rx-audio line output, balanced signal, 0dBm into 600Ω	pair no. 5
pin 15	Lineout -	Purple/Wht	X2-15	X1-15	Purple/Wht (**NC**)	X3-15		pair no. 5
Housing		Screen	Chassis	Chassis	Screen	Chassis		Screen
	EXT LS		(VHF LS out: X5-1)	CU1 LS out: X4-1		CU2 LS out: X6-1	External speaker output, nom. 5W into 8Ω (**see NOTE**)	
	EXT LS		(VHF LS out: X5-2)	CU2 LS out: X4-2		CU2 LS out: X6-2		

NOTE: In case of connecting a second CU (CU2) to the Extension Box, jumpers J1/J2 should be removed in order to disconnect VHF Ext. Speaker (VHF LS) output from terminals X6-1/2 and make available the CU2 Ext. Speaker (CU2 LS) connections instead.
VHF Ext. Speaker output will be available at terminals X5-1/2.
Connecting only one CU (CU1) and leaving jumpers J1/J2 in circuit provides VHF Ext. Speaker connection available at both X5-1/2 and X6-1/2.

9.2.2 System block diagram with extension box

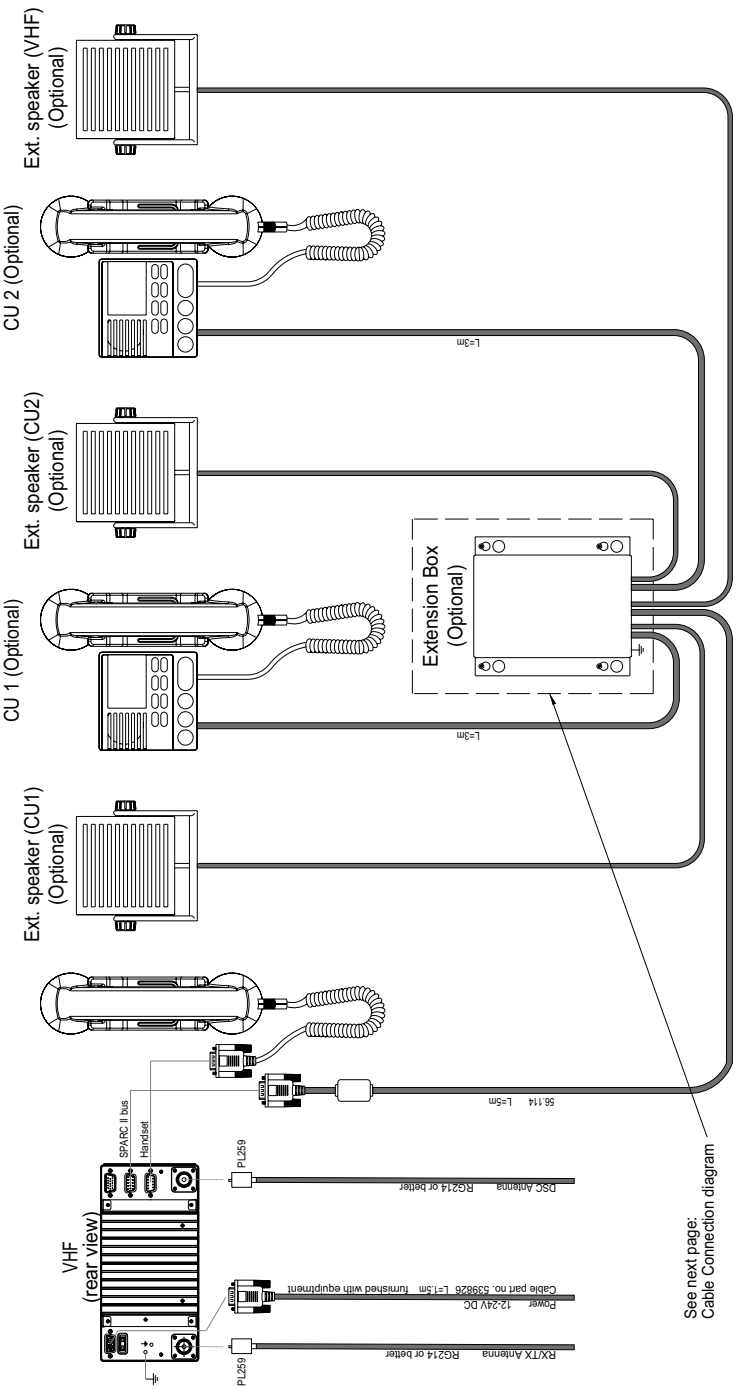

Power connection 12-24VDC, 120W min. continuous

Power cable p/n 539626, 1.5m 2x4.0mm2	
+ VDC	White
0 VDC	Black

SPARC II cable length specification

Conductor size	Maximum cable length
8x2x0.5mm2	20m
8x2x0.75mm2	30m
8x2x1mm2	40m

Note: All cabling not furnished with equipment to be overall screened type.
Cable screens must be securely grounded at cable inlets in connection boxes, as illustrated in cable connection diagrams.

External power supply input is galvanically isolated from equipment ground reference, i.e. chassis.
Equipment internal power supply reference (-) is at equipment ground reference, i.e. chassis.

3970/B

Cable connection diagram

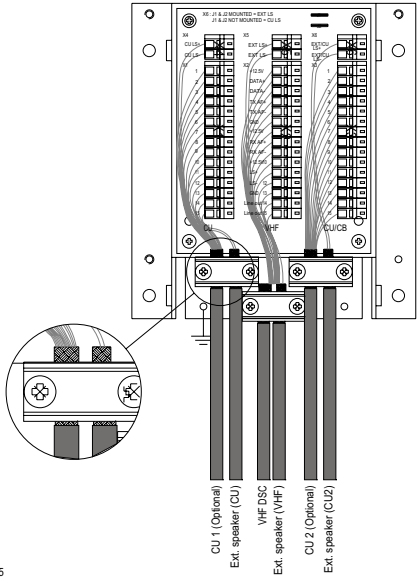

Interfaces

Extension box connections

VHF SPARC connector 15-pin D-sub female	Signal designation	Cable p/n 56.114 5m	Connection box In from VHF	Connection box Out to CU1 or extension box	Connection box Out to CU2 or extension box	Connection box to alarm panel	Alarm panel "VHF" connector X3	Signal description	Ships cable 8 twisted pairs overall screen
pin 1	12.5VDC+	Red/Wht	X3-1	X4-1	X5-1	X6-1		Power to CUs	pair no. 8
pin 2	DATA_+	Yel	X3-2	X4-2	X5-2	X6-2	3	SPARC II-bus Data	pair no. 1
pin 3	DATA_-	Yel/Blk	X3-3	X4-3	X5-3	X6-3	5		pair no. 1
pin 4	TX_AF+	Blu/Wht	X3-4	X4-4	X5-4	X6-4		SPARC II-bus Tx audio	pair no. 2
pin 5	TX_AF-	Blu	X3-5	X4-5	X5-5	X6-5			pair no. 2
pin 6	GND	Orange + Red	X3-6	X4-6	X5-6	X6-6	2	Equipment ground	pair no. 6 & 8
pin 7	12.5VDC+	Orange/Wht	X3-7	X4-7	X5-7	X6-7	9	Power to CUs	pair no. 6
pin 8	RX_AF+	Grn/Wht	X3-8	X4-8	X5-8	X6-8		SPARC II-bus Rx audio	pair no. 3
pin 9	RX_AF-	Grn	X3-9	X4-9	X5-9	X6-9			pair no. 3
pin 10	12.5VDC+	Blk/Wht	X3-10	X4-10	X5-10	X6-10		Power to CUs	pair no. 7
pin 11	EXT.Speaker +	Brn	X3-11	X4-11	X5-11	X6-11		VHF radio external speaker output, nom. 5W into 8Ω	pair no. 4
pin 12	EXT.Speaker -	Brn/Wht	X3-12	X4-12	X5-12	X6-12			pair no. 4
pin 13	GND	Blk	X3-13	X4-13	X5-13	X6-13		Equipment ground	pair no. 7
pin 14	Lineout +	Purple	X3-14	X4-14	X5-14	X6-14		Rx-audio line output, balanced signal, 0dBm into 600Ω	pair no. 5
pin 15	Lineout -	Purple/Wht	X3-15	X4-15	X5-15	X6-15			pair no. 5
Housing		Screen	Chassis	Chassis	Chassis	Chassis			Screen
	EXT LS			X8-1	X9-1			External speaker output, nom. 5W into 8Ω (**see NOTE**)	
	EXT LS			X8-2	X9-2				

NOTE: In case of connecting CU1 and/or CU2 directly to Connection Box, i.e. not utilizing Extension Box for connecting each CU, jumpers J1/J2 and/or J3/J4 in Connection Box must be removed in order to disconnect VHF Ext. Speaker (VHF LS) output from these terminals and make available the CU Ext. Loudspeaker (CU LS) connections instead.

9.3 Power supply

The VHF should be powered from a separately fused DC-supply of 10.8 - 32VDC and rated at minimum 120W continuous power for installations with RT5022 (Simplex/semi-duplex),and 150W for installations with the RT5020 (Duplex)

9.4 Antenna installation and precautions

9.4.1 Antennas

The VHF equipment requires two antennas installed one for the DSC receiver and the other (Primary) for the VHF RX/TX communication.
All commonly available 50Ω antennas covering the appropriate frequency range and providing a VSWR less than 1.5 over this range may be used.
The antennas should be connected using a low loss type 50Ω coaxial cable, e.g. good quality RG214 or better.
IMO-COMSAR/Circ. 32 recommends the use of a double screened type cable (like e.g. RG214) with a maximum insertion loss of 3dB across the antenna cable installation. The maximum antenna cable length in the installation thus depends on the quality of the cable used, i.e. the specified attenuation (dB/m) of the cable of choise at the high end of the VHF frequency band. As a rule of thumb the cable length using e.g. RG214 coaxial cable should not exceed 25m.
For further details on equipment/antenna installation, reference is made to the IMO-COMSAR/Circ. 32, GUIDELINES FOR THE HARMONIZATION OF GMDSS REQUIREMENTS FOR RADIO INSTALLATIONS ON BOARD SOLAS SHIPS.

9.4.2 RX/TX antenna

In installations consisting of two or more VHF radios it is important to ensure the optimum performance of these by carefully selecting the mutual antenna positions.
In general the highest possible RF attenuation between the VHF RX/TX antennas in the installation should be sought for. The most important parameter in achieving this is by ensuring that none of the RX/TX antennas in the installation are positioned at the same horizontal level, i.e. the RX/TX antennas must be installed at shifted elevations as indicated below.
In situations where sufficient vertical distance between two or more such antennas is found difficult to obtain the horizontal distance between them will play an increasingly important role in the equipment performance the less the vertical separation and as a minimum 5m horizontal distance between any RX/TX antennas in the installation should be ensured.

Additionally, in order to minimize any increase in VSWR of the VHF RX/TX antenna this should be installed in a distance no closer to any other mast/pole object or other RF antennas than 2 m.

To the widest possible extend the VHF antennas should be kept out of the antenna main beam of any radar and satellite equipment.

9.4.3 DSC antenna

The positioning of the DSC antennas is less critical in terms of the imposed VSWR and due to the nature of the DSC-signalling. It should be noted however, that the DSC receiver of a VHF is likely to be temporarily blocked in reception due to high signal blocking, if the associated DSC antenna is installed in close vicinity of a RX/TX antenna at the same horizontal level while transmission takes place from this RX/TX antenna.

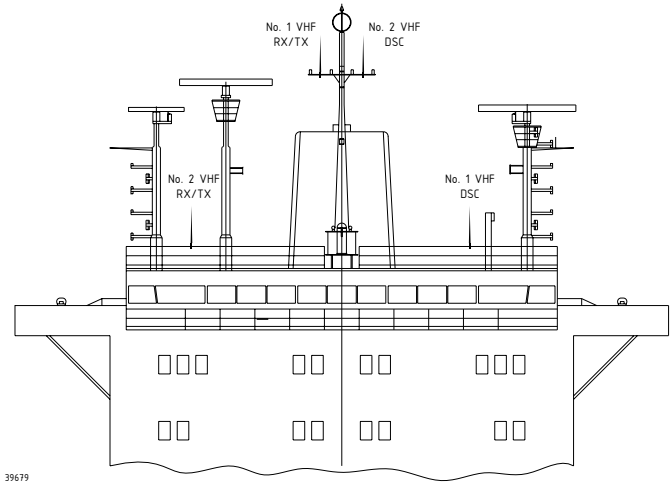

Example of VHF antenna arrangement.

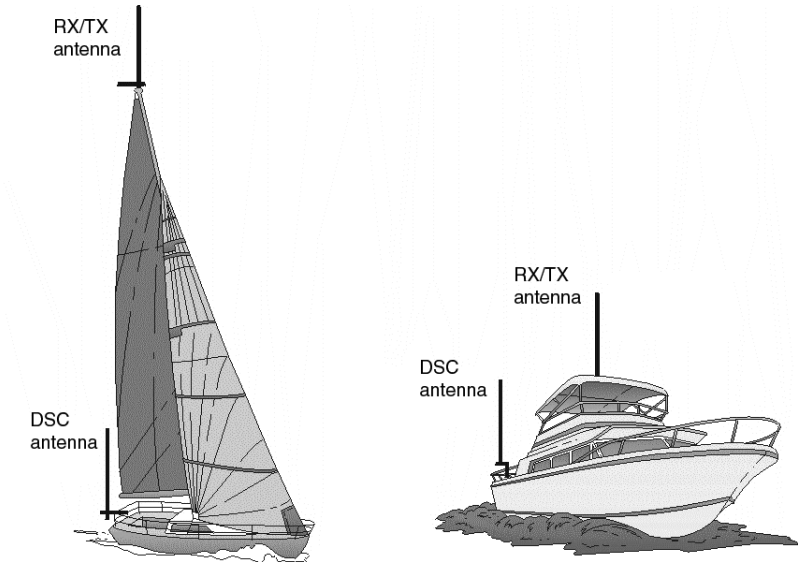

Example of VHF antenna arrangement.

10 Technical specifications

10.1 General information

Channel Tables	4 pre-programmed channel tables covering the following regions: • International waters - according to radio regulations • US waters – according to radio regulations • Inland waters (with ATIS) – according to radio regulations • Canadian waters – covering most areas
Private Channels	Up to 30 private channels in 3 separate banks (per channel) mode designated **F**,**P** or **L**. Each bank contains 10 private channels. Weather channels are pre-configured for US and Canadian regions, occupying a number of private channels.
Channel spacing	25 kHz / optional 12.5 kHz
Contact List	User programmable with up to 200 entries for easy DSC radiotelephony initiation.
Scanning	Priority scanning. All channels or scanning up to 3 user programmable scan tables in each channel mode.
Voice replay	Voice replay facility of up to 90 seconds of received voice data.
Automatic squelch	Automatic squelch adjustment with memory function.
Readout	Dimming facility for better sight at night.

10.2 General DSC facilities

DSC operation	According to Rec. ITU-R M.541-9 and Rec. ITU-R M.689-2
DSC protocol	According to Rec. ITU-R M.493-11 Class A
Navigator interface	According to IEC 61162-1 GLL, RMC, ZDA, GGA, VTG, GNS
Symbol error rate	
Below $1*10^{-2}$	-121 dBm or 0,20 ìV p.d.
Modulation	1700 Hz ± 400 Hz 1200 baud
Frequency error	below ± 1 Hz
Residual modulation	below –26 dB

10.3 Specific data for transceiver unit RT5022

Frequency range	Rx / Tx:149.300 - 163.750 MHz
Operation modes	Simplex / Semiduplex
Modulation	G3EJN for Telephony G2B for DSC.
Frequency stability	below ± 3 ppm
Aerial connectors	Standard 50 ohm female SO239
Temperature range	-15 ºC to +55 ºC
Supply voltage	12V to 24V DC nominal

Supply range	10,8V to 31,2V DC
Transceiver dimensions	H*W*D 100*200*210 mm
Transceiver weight	4,1 Kg

Receiver

Sensitivity for 20 dB SINAD	
CCITT weighted	-121 dBm typical
AF rated Power	
Internal L.S.	5 Watt in 8 ohm
Output for External L.S.	5 Watt in 8 ohm
Distortion	below 5 %
S/N ratio	more than 43 dB
Spurious emission	below 0,25 nW
Spurious response rejection	more than 74 dB
Intermodulation response	more than 73 dB
Co- channel rejection	better than –10 dB
Adjacent channel selectivity	more than 74 dB
Blocking level	more than 94 dBìV

Transmitter

RF output power	
High	25W +0dB to –0,5dB
Low	0,85 W +0,5dB to –1dB
Adjacent channel power	below 75 dB
Conducted spurious emission	below 0,25 mW
Distortion	below 3 %
S/N ratio	better than 46 dB

10.4 Specific data for transceiver unit RT5020

Frequency range	Rx / Tx:150.800 - 157.425 MHz
	Rx: 160.625 – 163.600 MHz
Operation modes	Simplex / Duplex
Modulation	G3EJN for Telephony
	G2B for DSC.
Frequency stability	below ± 3 ppm
Aerial connectors	Standard 50 ohm female SO239
Temperature range	-15 ºC to +55 ºC
Supply voltage	12V to 24V DC nominal
Supply range	10,8V to 31,2V DC
Transceiver dimensions	H*W*D 100*200*210 mm
Transceiver weight	4,9 Kg

Receiver

Sensitivity for 20 dB SINAD	
CCITT weighted	-119 dBm typical
Duplex spurious response att.	More than 74 dB
Duplex desentization	below 3 dB
AF rated Power	
Internal L.S.	5 Watt in 8 ohm
Output for External L.S.	5 Watt in 8 ohm
Distortion	below 5 %

S/N ratio	more than 43 dB
Spurious emission	below 0,25 nW
Spurious response rejection	more than 74 dB
Intermodulation response	more than 73 dB
Co- channel rejection	better than –10 dB
Adjacent channel selectivity	more than 74 dB
Blocking level	more than 94 dBìV

Transmitter

RF output power	
High	25W +0dB to –0,5dB
Low	0,85 W +0,5dB to –1dB
Adjacent channel power	below 75 dB
Conducted spurious emission	below 0,25 mW
Distortion	below 3 %
S/N ratio	better than 46 dB

Thrane & Thrane

DECLARATION OF CONFORMITY

Thrane & Thrane A/S
Porsvej 2
9200 Aalborg SV
DK-Denmark

We as manufacturer herewith declare that the following equipment complies with the specifications of the Marine Equipment Directive 96/98/EC & the amending Directive 2002/75/EC, A.1/5.1: A.1/5.2

Equipments

SAILOR RT50xx VHF Radiotelephone with DSC Controller & Ch 70 Watch Keeping Receiver
Consisting of:

RT5022	Main Transceiver Unit, simplex, semi-duplex
RT5020	Main Transceiver Unit, duplex
HS5001	Handset
CU5000	Remote Control Unit
CB5009	Connection Box
EB5008	Extension Box
LB5007	LAN Box
SB5006	Service Box
AP4365	Alarm Panel

Equipment Applicability

SAILOR RT5022 is a simplex/semi duplex VHF radiotelephone, and SAILOR RT5020 is a full duplex VHF radiotelephone, both designed for maritime communication within the Global Maritime Distress and Safety System, GMDSS, with DSC capability.
SAILOR RT5022 and SAILOR RT5020 are able to operate on all international VHF channels.

Declaration

SAILOR RT5022 and SAILOR RT5020 conform to the Maritime Equipment Directive 96/98 EC and 2002/75 EC which is shown by conforming to the Harmonised standards EN60945 regarding environmental requirements, EN301925 regarding spectrum matters and EN300338 regarding Digital Selective Calling, DSC.
SAILOR RT5022 also conforms to FCC rules part 80. FCC ID: TCORT5022

Certificate no.

MED 96/98 EC Module D certificate - P.117 Notified Body Telefication **0560**
Telefication 05212002/AA/02
Telefication 05218052/AA/00

02.11 - 2005
Date

Executive Chief Officer
Henrik Lunde

Thrane & Thrane A/S · info@thrane.com · www.thrane.com

Thrane & Thrane