SAILOR RT5022 VHF DSC Operation Manual

PRELIMINARY

Introduction

Congratulations on your new SAILOR RT5022 VHF

SAILOR marine equipment is specially designed for the extremely rugged conditions on bord a ship, based on more than 50 years experience with all kinds of vessels , from small pleasure crafts, over fishing vessels working under all climatic conditions, to the biggest ships.

SAILOR ® is one of Europe's leading manufacturers of maritime radiocommunication equipment - a position which has been maintained by means of constant and extensive product development. We have a worldwide network of dealers with general agencies in more than 80 countries. All our dealers are specially trained to service all your SAILOR ® products.

About this manual

This manual is for the daily user of the system. Additionally, it includes a section on the installation procedures, and - on page ii - standard distress procedures. **We highly recommend you to read the manual before you start using the equipment.**

Notice: There may be some minor differences in the graphic layout of the manual compared to the physical device.

Abbreviations used in this manual

ADDR	Address
BI	Channel mode when sailing on European rivers
BQ	DSC Call Acknowledgement Reply
CU	Control Unit
DSC	Digital Selective Calling
DW	Dual Watch
EOS	DSC End Of Sequence
GMDSS	Global Maritime Distress and Safety System
MMSI	Maritime Mobile Service Identification
PTT	"Push To Talk" button
RQ	DSC Call Acknowledgement Request
RX	Receive/r
SQ	Squelch
TX	Transmit/ter
UTC	Coordinated Universal Time

Please note

Any responsibility or liability for loss or damage in connection with the use of this product and the accompanying documentation is disclaimed. The information in this manual is furnished for informational use only, is subject to change without notice, may contain errors or inaccuracies, and represents no commitment whatsoever. This agreement is governed by the laws of Denmark.

Doc. No.: B5022GB0 Issue: PRELIMINARY, 0505

QUICK DSC DISTRESS CALL
(only for emergency use)

1. If necessary, switch on by pressing the **ON/OFF** button.
2. Lift up lid covering the orange **DISTRESS** key and press for 5 seconds.
3. **Alarm** indicator light will flash and will be accompanied by a sound. Distress is sent after continuous tone.
4. Unless stopped manually, by pressing the ◀Menu key or switching the unit off, the distress call is automatically repeated every 3½-4½ minutes until distress acknowledgment is received.

Wait for distress acknowledgement and start mayday procedure. If an alarm panel is connected the VHF DISTRESS button on this unit will have the same functionality. All further handling should continue in front of your main VHF DSC.

MAYDAY PROCEDURE

When DSC distress acknowledgement is received after you pushed DISTRESS, or if you otherwise need to commence distress traffic by radiotelephony on the distress traffic frequency channel 16, this should follow:

- “MAYDAY”,
- “this is”,
- the 9-digit identity *and* the call sign or other identification of the ship,
- the ship’s position in latitude and longitude or other reference to a known geographical location,
- the nature of distress and assistance wanted,
- any other information which might facilitate the rescue.

Upon reception of a DSC distress alert from another ship in distress, you should acknowledge the receipt by radiotelephony on the distress traffic frequency channel 16, with the following:

- “MAYDAY”,
- the 9-digit identity of the ship in distress, repeated 3 times, “this is”,
- the 9-digit identity or the call sign or other identification of own ship, repeated 3 times,
- “RECEIVED MAYDAY”.

Your VHF at a glance

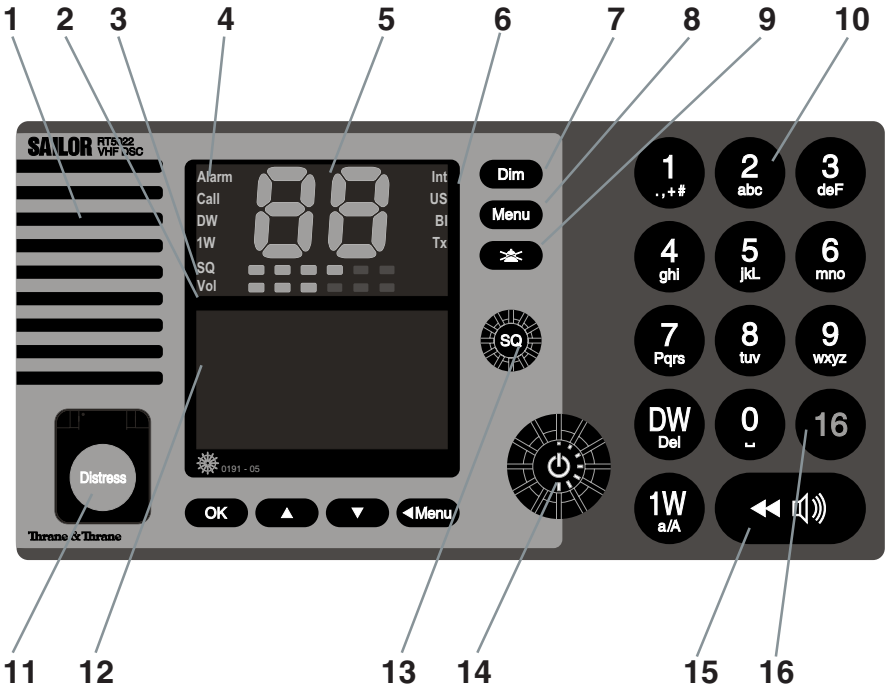

1. Loudspeaker
2. Volume level indicator
3. Squelsh level indicator
4. Indicator lamps. Condition when lit:
   1W: 1 watt transmission mode.
   Alarm: Alarm call received.
   Call: DSC call for you received.
   DW:
5. Telephone display
6. Indicators. Condition when lit:
   Tx: Transmitting
   Int: International channel system activated
   (Is used when sailing on any sea in the world except in US waters)
   US: US channel system activated
   (Is used when sailing in US Waters)
   BI: BI channel system activated
   (Is used when sailing on the rivers of Europe)
7. Dimming button
8. Menu button
9. Mute alerts
10. Keyboard.
11. DISTRESS button (Lid with spring. Normal push button underneath)
12. Information/Message display
13. Squelsh control. Adjust to silent when no station is received
14. Push ON/OFF / VOLUME control
15. Replay button
16. Quick-select key for channel 16.

Contents

Introduction ..... **ii**
About this manual ii
Abbreviations used in this manual ii

QUICK DSC DISTRESS CALL ..... **iii**
MAYDAY PROCEDURE ..... **iii**
Your VHF at a glance ..... **iv**

1 Radio Communication in brief **3**
1.1 Powering VHF 3
1.2 Operating VHF radio communication 3
1.3 Receiving a Call on Channel 16 3
1.4 Making a Radiotelephone Call 4
1.5 Speaker Volume 4
1.6 Earpiece Volume 4
1.7 Squelch 4
1.8 Channel Selection 5
1.9 Dual Watch 5
1.10 Replay 5
1.11 Dimming 6
1.12 Contrast 6

2 Basic DSC Operations **7**
2.1 Menu Operation 7
2.2 Receiving a DSC call 7
2.3 Transmitting DSC Calls 8
2.4 Call a Ship Station 8
2.5 Call a Shore Station 8
2.6 Direct Call to a PSTN via a Coast Station 8
2.7 Call a Group of Ships 9
2.8 Create Emergency Calls 9
2.9 DSC Call Log 9
2.10 Entering Your Position into the System 9

3 Your VHF in detail **11**
3.1 Abnormal Power-down 11
3.2 Settings 11
3.3 Setting Channel Mode 11
3.4 Private channels 11
3.5 Duplex Channels 12
3.6 ATIS (Inland Waterways Only) 12
3.7 Transmitter power 12
3.8 Channel Scanning 12
3.9 Creating Scan Tables 13

4 DSC Operations in Detail 14
4.1 MMSI Number 14
4.2 Group MMSI Number 14
4.3 Differentiating Incoming Calls by Ringing Tones 14
4.4 Working Channel 15
4.5 Contact List 15
4.6 Settings for DSC 17
4.7 Implicit Behaviour for Operations with DSC 18
4.8 Radio Configuration and Settings 20

5 Errors and Warnings 21
5.1 System Event logging 21
5.2 Troubleshooting 22

6 Menu Tree 25

7 Optional Functional Devices 27
7.1 Semifunctional Control Unit 27
7.2 Alarm Panel 30
7.3 Printer 31

8 Maritime Channels 32
8.1 International Channels 32
8.2 US Channels 33
8.3 BI Channels 34

9 Installation 35
9.1 Mounting possibilities 35
9.2 Interface connections 41
9.3 Power supply 47
9.4 Antenna installation and precautions 47

10 Technical specification 50

1 Radio Communication in brief

1.1 Powering VHF

The VHF is turned on by a single push on the ON/OFF/Vol button. The VHF is turned off by pressing the ON/OFF/Vol button for 3 seconds.
Always indicated with a count down window in the information display, except if the radio is powered down in distress state.

Any connected devices (Alarm panel, Handset, CUs) will only be operational if the VHF is powered.

1.2 Operating VHF radio communication

The VHF is operated by means of a handset.

To bring the VHF in transmission mode handset must be hooked off and the PTT button on the handset is be pressed. Transmission is indicated with the TX indicator lit. Receive mode is always reached by releasing the PTT button.

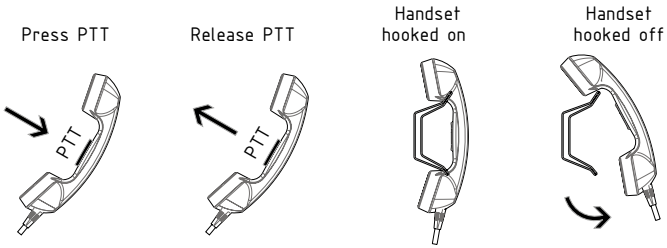

Transmit and receive is performed on the working channel shown in the telephone display.

1.3 Receiving a Call on Channel 16

When you hear your call name in the loudspeaker:

1. Lift the handset.
2. Press the **PTT** key.
3. Repeat the name of the station calling you and say “This is [your ship’s name].”
4. Suggest a channel other than 16 by saying “Channel [suggested number]”.
5. Say “Over” and release the **PTT** key
   to allow your caller to confirm the suggested new channel.
6. Switch to the new channel – for example, channel 71
   – and begin your conversation. Only press **PTT** when you are talking. If you are on a simplex channel (in other words, a channel that can carry just one transmission at a time), always say “Over” just before releasing. With duplex channels (ship-shore calls), the conversation can be two-way as with a normal land telephone call.

1.4 Making a Radiotelephone Call

A radiotelephone call is preferably to be commenced using DSC. Alternatively the following public calling procedure shall be used:

1. Select channel 16 (by pressing 16) or other agreed channel.
2. Lift the handset.
3. Press the **PTT** key and make your call.
   First, say the name of the station
   you are calling three times.
   Then say “This is [your ship’s name”], again three times.
   Finally, say “Over”.
4. Release the **PTT** key to listen.
5. When answered, agree upon a channel,
   switch to that channel – for example, channel 6 – and begin your conversation. Only press **PTT** when you are talking. If on a simplex channel (in other words, a channel that can carry just one transmission at a time), always say “Over” just before releasing.

1.5 Speaker Volume

The volume in the loudspeaker (internal and optional external) is adjusted by turning the VOLUME control. The volume level is visualized in the telephone display. The volume can be adjusted to a mute state by turning the volume control left (down). If the volume is adjusted to the mute level the VOL LED will flash.

1.6 Earpiece Volume

The volume level of the default handset earpiece is adjusted selecting the Handset Volume menu **(4.3.1)**.

The ▲ and ▼ buttons are used to adjust the level. The level is indicated in the information/message display.

1.7 Squelch

The squelch level is adjusted using the squelch control. The actual squelch level is visualized in the telephone display.

1.8 Channel Selection

The system is defaulting to channel 16 after a normal power-on.

Channels can be selected using the

▲ (increasing to next valid VHF channel) or

▼ (decreasing channel). Channels can also be entered using the numeric keypad.

The active working channel is always shown in the upper display.

1.9 Dual Watch

DW Del

Dual watch is a mode where the priority channel (16) is scanned periodically for a signal while listening on a working channel.
Dual watch is activated pressing the DW button.

The DW indicator is lit while DW is active. Dual watch is deactivated by:

- Pushing DW – Continue to receive on the working channel.
- Pushing PTT – Transmit always on working channel
- Pushing ´16´.
- Pushing Replay - Dual watch is terminated while message is replayed and will then be re-invoked

Selecting a new channel while in dual watch mode will continue dual watch on the new selected working channel, unless signal is found on channel 16.

1.10 Replay

Replay is a facility built into the VHF which will allow a copy of the last 90 seconds of received voice data to be replayed in the loudspeaker.

Recorded voice data will be erased at any power-down.

Activating Replay

The front panel has a dedicated replay button.

A push on replay will bring up a window in the information/message display. Holding down replay will drive a counter in the display by which it is determined how many seconds of the latest received voice data is wanted for replay.

While pressing replay in normal receive mode will still allow the VHF to receive audio in the speaker system.

When releasing the replay button the replay function will play the last selected seconds of data received on any channel. During replay new incoming data is not heard, nor recorded. But incoming voice is recognized in the lower left corner of the display.

Volume control can be used on the replay data to adjust loudspeaker level.

1.11 Dimming

Dim

To adjust the light intensity the Dim button is pressed.
While the Dim button is pressed the intensity is changing. Releasing Dim will maintain the current light intensity.

A renewed pressing of the Dim button will change the direction of light intensity change.

If the VHF is dimmed to zero, any key press will wake up the light to a minimum visible at night. Active text in the information/message display might prevent dimming to zero.

It is possible to reduce illumination to zero. If you press a key in this state the light will illuminate to the lowest illuminated state for 5 seconds, whereafter it will return to the zero illumination state. If a message is shown on the screen while dimming was set to zero, the illumination is adjusted to the lowest nonzero value.

1.12 Contrast

Contrast of the information/message display (and thereby optimizing the vertical viewing angle) can be adjusted initially by entering Display Contrast menu. Use the arrows to adjust contrast. The contrast will simultaneously be set during adjustment.

2 Basic DSC Operations

When switched on, your VHF automatically monitors channel 70 for incoming DSC calls.

2.1 Menu Operation

To operate DSC functionality the menu system is used. The main menu can be activated by pressing Menu. From the main menu all parts of the menu tree can be reached (see chapter: Menu Tree).

All menus have a unique hierarchical number. The main menu is the only menu which does not have a number. The number is (to a certain level) displayed in the upper right corner of the screen. If more than 6 items are available in the menu arrows shall indicate if remaining items are to find above (▲) current items or below (▼) current displayed menu items.

A focus is displayed over the active menu item. A push on ▲ or ▼ will move the focus.

A push on OK will select the item which is currently in focus.

A push on any of the numeric keys (1 to 9) in a menu will quickly select the menu item with the corresponding number.

A push on ◀Menu will return to the previous menu window (normally one level up). If the ◀Menu is pushed in the main menu, the menu is turned off.

Selecting the menus for transmitting DSC calls will lead to a sequence of windows (flows). The flow sequences are controlled with the OK (accept and proceed to next window) or ◀Menu (cancel and return to the previous window) buttons.

Following a menu hierarchy or a window flow might include a guidance text (e.g. “OK/next” ◀Menu). Certain windows and lists do not show any guidance texts. These windows can always be left with Menu (jumping to main menu) or ◀Menu (returning to the previous window).

2.2 Receiving a DSC call

An incoming call will always be recognized by activity on the CALL indicator – and if more severe (Distress and Urgency calls), also the ALARM indicator. When receiving a DSC call the message will be displayed immediately in the information/message display, if not obstructed by any other operations taking place. Received DSC calls will always be accompanied by a sound alarm.

When you receive a call you can read in the display if the call is addressed to All Ships, ships in a geographic area, a group of ships or to your ship (identified by your MMSI number) as an individual call.

If you are busy you can chose to handle the call a little later (e.g. by pushing), which will stop the alarm sound.

Once you are ready to accept the call, lift the handset or press OK. Your choices handling the particular call will now appear. Follow the instructions.

If an individual call is received it will not be acknowledged before you accept the call.

2.3 Transmitting DSC Calls

All DSC calls are initiated from the DSC Call Menu **(1)**.

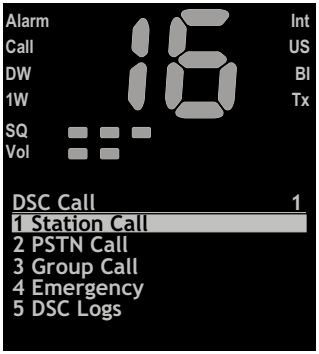

Once entering a menu item, you will be guided through the call construction. For every call generated you will have the possibility to verify the call before you transmit the call.

2.4 Call a Ship Station

To call a ship station and propose a working channel, enter the Station Call menu **(1.1)** and follow the instructions. Have the ships MMSI number ready if it is not available in the contact list.

2.5 Call a Shore Station

To call a shore station, enter the Station Call menu **(1.1)** and follow the instructions. Have the shore MMSI number (00*) ready if it is not available via the contact list.

2.6 Direct Call to a PSTN via a Coast Station

This call requires automatic/semi-automatic support from the coast station, and is only available within some countries. If the service is not available, you will need to make a simple shore station call and request the connection via radiotelephony.

To make a direct phone call to a PSTN or a mobile phone, enter the direct phone call menu **(1.2)** and follow the instructions. Have MMSI number (00*) for a reachable shore station ready if it is not available via the contact list, as well as the public phone number you would like to request.

2.7 Call a Group of Ships

To call a group of ship stations, enter the Group Call menu **(1.3)** and follow the instructions. Have the group MMSI number (0*) ready if it is not available via the contact list.

2.8 Create Emergency Calls

In the category of emergency calls **(1.4)** you will find the following menu:

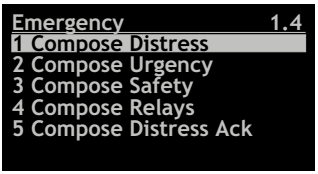

Transmitting any of these calls should be done with caution. Please make yourself familiar to the common procedures for using these calls.

Selecting any of the call types will lead to a call establishing flow with maximum flexibility. You should make yourself familiar with the flow sequences, but be sure you do not actually send the message by mistake. **In other words, never press OK to the transmit verification window if you do not actually intend to send an emergency call.**

Distress calls are always transmitted pushing the DISTRESS button for 5 seconds. After you have transmitted a distress call the VHF is in distress state (distress call is re-transmitted once each 3½-4½ minutes). The distress state can only be exited by reception of the appropriate distress acknowledgement call or if you press ◀Menu for 5 seconds, or if you power off the VHF. The VHF will start up in distress state after a power failure.

2.9 DSC Call Log

Received and transmitted DSC messages can be found with details in the DSC Logs **(1.5)**. A special log contains distress related calls. The call log system will store the last (20) calls sorted by date and time.

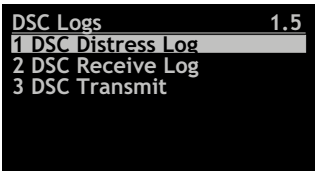

Each of the logs and each of the calls within the logs have their own possible actions upon selection (e.g. printing).

2.10 Entering Your Position into the System

Ship's position and the time for that position are essential to the success of a possible rescue operation. This information is namely automatically added to a DSC Distress call sent from your VHF. Therefore it is important to always keep this information updated.

Normally a GPS is connected to the VHF. In case of correct installation this will assure the position and time to be updated correct.

If your VHF is not connected to an external GPS system, or a malfunction of the GPS connection is detected by the VHF, the VHF will automatically prompt you for updating your position manually 1 minute after power-up and then every 4 hours. The position and time can always be entered on your initiative via the Set Position & Time selection in the Settings menu **(4.1.1)**.

3 Your VHF in detail

3.1 Abnormal Power-down

If for any reason the main power disappears for a period less than 10 minutes, the VHF will be able to turn itself on when power is resumed (without pushing ON/OFF).

If the VHF was abnormally powered down, for less than 1 minute the VHF will start up with the same settings as before the power failure took place (communication channel, volume, squelch settings, etc.).

If the abnormal power down lasted more than 1 minute the VHF might start up with the settings as they were last time the VHF was turned off normal.

3.2 Settings

All volume settings are stored as default during the power off sequence.

3.3 Setting Channel Mode

The VHF carries always international (Int), USA (US) and Inland waterways (BI). Each country mode needs to be enabled by the authorized dealer to be available for selection. The selection of the available regions is done via menu **(4.4.1)**. The selected channel mode is indicated on the front.

Selected country mode is stored as default during power-down sequence.
In Inland waterways (BI) mode it is not possible to use Dual Watch or scanning.

3.4 Private channels

Private channels can be enabled using the service interface only (distributor/dealer).

Enabled private channels become valid for selection on the front. Using the ▲ / ▼ will simply make the private channel number appear above the highest numeric channel number. A programmed private channel will be available in any country mode.

Private channels can be selected using the numeric key pad:

- Private channels: Long press on 7 Pqrs followed by a digit (**0-9**)
- Leisure channels: Long press on 5 jkL followed by a digit (**0-9**)
- Fisher channels: Long press on 3 deF followed by a digit (**0-9**)

Continued activation of the buttons ´3´, ´5´ or ´7´ will cause the letters **F-, L-** or **P-** respectively to be displayed.

3.5 Duplex Channels

If duplex channels are selected in the channel table (see chapter: Maritime Channels) the VHF will operate in semi-duplex mode meaning the VHF is operated simplex but using two different frequencies for receive and transmit.

3.6 ATIS (Inland Waterways Only)

ATIS is mandatory to use in inland waterways on e.g. the Rhine. ATIS is a digital data stream containing ships call sign coded into a DSC-like message, sent over the voice channel each time the PTT button is released. If PTT is continuously pushed ATIS is automatically sent each 5 minutes.
ATIS is enabled automatically when BI is selected in menu **(4.4.1)**.
For purpose of operater comfort the received ATIS signal on the active voice channel will be muted.
The ATIS call sign is programmable from the service interface or from menu **4.4.3**. once.

3.7 Transmitter power

Transmitter output power can always be chosen while the radio is active. Pushing the 1W button will toggle the transmitter power between low power (below 1W) and high power (below 25W). The 1W indicator is lit when low power is selected. As a default any channel shift will cause the transmitter power to be adjusted to the maximum allowed on that channel.

3.8 Channel Scanning

Scanning is an extension to the dual watch functionality, by which it is possible to watch multiple channels. It is possible to scan:

- All channels in a sequence
- A number of selected channels in a sequence organized into individual 3 scan tables - Scan table A, B and C.

The scan type is selectable from the Scanning menu **(3)**. The DW indicator is lit as well (because the priority channel 16 by default is included in any scan table.

During scan “SC” is shown in the upper display.

If an active signal is found on a channel different from channel 16 the radio remains on that channel for 10 seconds (but still respecting dual watch requirements), where after scanning is resumed. The telephone display is displaying the active channel.

If an active signal is found on channel 16 the VHF is locked on channel 16 until the signal disappears, where after scanning is resumed. The telephone display is displaying the active channel (16).

While the active scanning window is shown scanning can be terminated by:

- Lifting handset off hook
- Pushing ´16´ - Channel 16 is used for working channel
- Pushing DISTRESS – Initiates DSC distress
- Pressing ◀Menu – Working channel is used as before scanning was entered (regardless of carrier state).
- Pushing Replay - Message is replayed

The active scanning window is active in the graphics display for 30 seconds (or pressing OK). Then it turns off. After this window has been turned off, scanning can be turned off using the following:

- Lifting handset off hook
- Pushing ´16´ - Channel 16 is used for working channel
- Pushing any numeric key – Normal channel entry
- Pushing DISTRESS – Initiates DSC distress

If scanning is terminated while no active signal was found, the VHF will receive on the working channel (as it was before scanning was initiated).

If scanning is terminated (handset hook-off) while an active signal is received, the VHF will operate on that channel after termination.

3.9 Creating Scan Tables

The scanning tables are user configurable. Creating or editing a scanning table organizing a subset of channels (e.g. Table A) for scanning is done by selecting the Scanning Table A menu **(3.5.1)**.

Private channels (non-numeric identifiers – P, F or L) can be part of a channel table. The number of channels in a scan table is limited to 10.

Scanning tables are stored during the power-down sequence.

4 DSC Operations in Detail

4.1 MMSI Number

To operate VHF with DSC the equipment need to be configured with your vessels MMSI number. If not configured before installation the VHF will inform you at start-up to program the MMSI number.

The vessels MMSI number is programmable from the DSC menu **(4.5)**. It can only be programmed once from this menu after which changing the programmed MMSI will be possible only through the service interface.

If the MMSI number has been programmed correctly the number is displayed during start-up

Detail

4.2 Group MMSI Number

If your radio is configured as member of a group(s) it will receive group calls to that group.

The VHF can be configured to be part of (up to 10) groups. The group MMSI numbers can be programmed from menu **4.5.2**.

The configured group numbers are shown as a list. You can add a group MMSI number by selecting with OK the <empty> list entry. Enter a valid group MMSI and press OK. A group number can be changed by selecting the number OK, edit the number and press OK. A group number can be removed from the list by selecting the number OK, delete the number and press OK.

4.3 Differentiating Incoming Calls by Ringing Tones

Your VHF rings in various ways according to the nature of the call, as the following diagram shows:

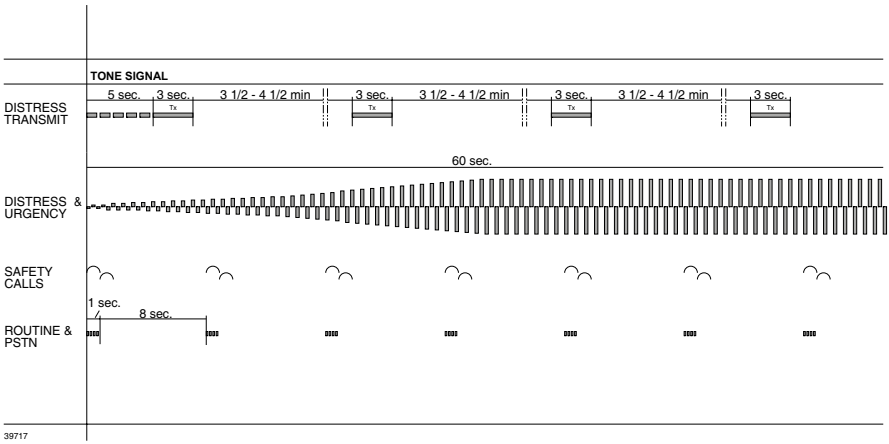

If an individual call acknowledgement is received, an alarm tone is activated that is equal to the alarm tone used for receiving a call request of the same type.

Calls that are not received as distress calls or calls with category distress or urgency will always engage the prescribed alarm sound. For any other DSC calls the call sound on reception can be enabled/disabled from a setup menu **(4.3.2)**.

If you receive a call with an alarm sound you will always be able to mute the alarm by pressing the button to be able to finish current radiotelephony business. This procedure will not affect the actual call accept procedure.

4.4 Working Channel

A working channel will always be proposed by the system if a ship station or group is called for a routine call. The working channel is proposed using the following scheme:

1. Select a random channel from the list of simplex channels.
2. Scan channel for traffic (open squelch)
3. If channel is free propose channel.
4. If channel is busy restart from 1.

If no channels are found to be free within 1 second no channel is proposed.

4.5 Contact List

The contact list or phone book can contain up to 200 entries.

Each entry might contain:

- Station-, Group-, Coast station- or Public name
- Station MMSI, Group MMSI, Coast MMSI and/or Public Phone Number

The contact list can be reached from the Contacts menu (**2**).

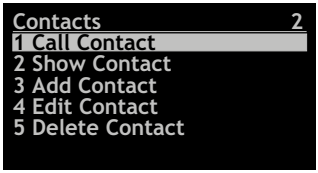

4.5.1 Calling a Contact

It is possible to initiate the following calls from Call Contact menu item (**2.1**):

- Individual station (ships or coast) routine radiotelephony calls
- Group routine calls
- Direct Dial Phone calls to a land line (PSTN)

Entering the Call Contact menu item will bring up a list of selectable names. The name list is sorted alphabetically. Sorting is only intended to work properly for the characters A-Z, a-z.

The alphanumeric keypad can be used for quick search for items (using wheel mode). Selecting a contact will show
data for that contact. Example:

When OK is pressed the appropriate call generator will be initialized, based on the data.

Detail

If a PSTN number is present for the contact the PSTN call flow is initiated:

- If a coast station MMSI number is also available for that contact (as in the example figure above) the operator will be lead to the transmit verification window for the PSTN call.
- If no coast station MMSI number is present the operator will be lead to the window where the coast station MMSI can be entered.

If only an MMSI number is present for the contact a station or group call is initiated:

- If the MMSI number is a group number the group call flow is entered from the window where a channel is selected.
- If a ship station number MMSI is available the station call flow is entered from the window where a channel is selected.
- If the MMSI number is a coast station the operator will be lead to the transmit verification window for a station call.

Once entered the selected call sequence the maneuvering in Contacts is terminated and any press on OK/%Menu will go forth and back in the call flow.

4.5.2 Show Contact

It is possible to search for a contact's information without changing or initiate anything, via the menu item **2.2.**

4.5.3 Adding a New Contact

If you want to add a new contact to your list, go into menu item **2.3**. The following empty contact window will apply:

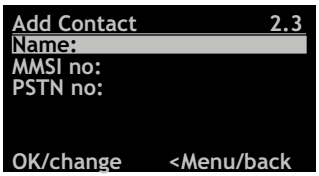

The focus bar is used to control which field the operator wants to put information into. Example if OK is pressed:

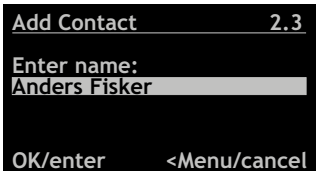

After having pressed OK the contact information looks as the following:

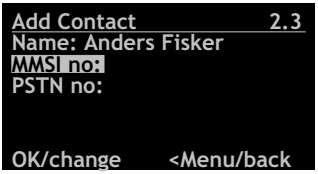

When the necessary data has been entered ◀Menu is pressed. If neither a valid MMSI number, nor a PSTN number is entered, no contact is added to the Contact list.

4.5.4 Editing The Contact List

Any contacts from the list can be edited using a similar principle as described above using menu item **2.4**.

4.5.5 Deleting a Contact Entry

Any contact can be deleted from the contact list. If menu **2.5** is selected the contact can be searched for in the list. When found and selected the following window appears:

A push on OK will delete the contact.

4.6 Settings for DSC

The following sections describe the settings that can be applied to different call types.

4.6.1 Special Calls

It is configurable via the service interface if the VHF shall support transmission of All Ships DSC urgency messages with second tele-commands:

- Medical transports
- Ships and Aircrafts

These settings can only be changed from service interface. Reception of these calls are always possible.

If the VHF is configured for using these calls it will work the following way:

- After powering up (normally) the VHF it will **not** be possible to use these call types (message: “Call type not enabled in VHF” if selected.)
- Each of the call types can be enabled via the menus **4.5.3.** (the filled square indicates the call type is enabled).
- After enabling the call property can be added in an All Ships Urgency call sequence.

4.6.2 Automatic Acknowledgement

The VHF can be set up to automatic acknowledge the following calls:

- Safety Position Requests - Default disabled after power-up
- Safety Test Requests - Default enabled after power-up
- Routine Polling Requests - Default enabled after power-up

After power-up the behavior can be changed from menu **4.5.4**.

The automatic acknowledgement (if enabled) will take place without informing the operator. The calls are stored in the receive/transmit log. The operator might experience a short interruption in functionality while the automatic acknowledgement takes place (e.g. scanning, dual watch).

4.6.3 Automatic Channel Shift

The VHF can be set up to automatically change working channel on reception of the following calls:

- Individual radiotelephony acknowledgement with a valid channel information
- Radiotelephony group calls with valid channel information
- Radiotelephony all ship safety calls with valid channel information

The set-up is done via menu **4.5.5.** The setting will survive powering off the product.

If enabled a received call will start the (normally) periodic alarm only once. The channel will switch immediately after and the window is closed.

The automatic channel shift is overruled (turned to manual acknowledgement - requiring push on OK or make a hook-on to hook-off transition) if:

- Any handset is hooked off
- The received call cannot currently be presented on the information display (due to priority)

Distress calls and all ship calls with category distress or urgency will alert continuously until manually handled from the front.

4.7 Implicit Behaviour for Operations with DSC

This section describes assumptions and decisions made that are critical for correct functionality, but might be hidden to the operator in the display.

4.7.1 DSC Transmission

All DSC calls are transmitted on channel 70 with a transmitter power of 25W. Distress, Urgency and non-test safety calls are always transmitted. Other calls are only sent if the radio is not already recognizing a DSC message on channel 70.

4.7.2 Transmitting Undesignated Distress

Undesignated distress (solely created using the DISTRESS button) does not show any message prior to the actual transmission. The following message will be sent:

Format Specifier: Distress (112)
Self-Id: <Your MMSI number>
Nature of Distress: Undesignated (107)
Distress Coordinates: Automatically inserted if position is available (e.g. from GPS), otherwise unknown (9999999999)
Time of Position: Automatically inserted if time of position is available (e.g. from GPS), otherwise unknown (8888)
Subsequent communication: 100
EOS: 127

4.7.3 Verification of a DSC Call Before Transmission

The final step in each DSC call sequence is the verification window, i which it is possible to verify the call you are about to transmit. The VHF will by default only display information that you could influence in the call setup. Example:

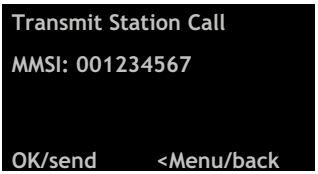

What is hidden to the user is that calls are formed according to the specifications ITU R.493-11.
For the example call (an individual station call request) the following information is not shown to the user:

- 1st tele-command: F3E/G3E Simplex TP
- EOS: Acknowledgement request (RQ = 117)

For all radiotelephony calls transmitted to all ships or to a group of ships:

- EOS: End Of Call (127)

Transmitted acknowledgement calls are not shown in any verification window before transmission. The acknowledgement of any received individual call requests will be according to ITU R.493-11. The manipulation of the received call will be:

- Self-ID in the received call is used as address in the transmitted call
- Address in the received call is used as self-ID in the transmitted call
- EOS: Acknowledgement (BQ = 122)
- 1st tele-command might be changed to “Unable to Comply” (104) on operators request, with the selected reason.

For all received or transmitted calls the full information can be retrieved from the DSC log.

4.7.4 Receiving DSC calls with errors

Distress calls will have an importance that high that even if they are received with errors they will, as far as possible, be received and displayed on the screen. If a call is received with errors this will be indicated with a “receive error” (REC ERR) marking next to the heading of the call. In this case the full integrity of the data is not to be trusted, and the handling possibility (e.g. relaying the call with direct use of the received data) is limited by the equipment.

4.7.5 Priority of DSC versus VHF

If a situation occur where a conflict between the VHF and the DSC functionality occurs (for instance voice transmission on a working channel – using PTT, simultaneously with transmission of a DSC call), the DSC transmission will be prioritized. As a consequence the following VHF functions may need to be re-initiated if DSC activity has occurred while these were active:

- Replay
- Scanning
- Dual Watch
- PTT

A normal received DSC call request will appear on the screen as soon it is recognized on channel 70. This will not affect VHF radiotelephony before OK is pushed, unless automatic channel shift has been configureded (See chapter: Automatic Channel Shift:)

4.8 Radio Configuration and Settings

This section describes the configuration and setting possible to control from the operator front and that is not described elsewhere in this manual.
If your equipment need configuration beyond these possibilities, you must call you dealer for special support.

4.8.1 Inactive Display

Whenever the radio is left in a state where the information/message display is not in use (pure radio communication mode), the information display will return to inactivity or standby mode. This will also be the case if the unit was left in a simple menu for 10 minutes.

The required and prefered default inactivity display is, that position and time stored for DSC operation is shown along with the ships identity (MMSI). This mode will always appear after start-up. The user might change the default display to be blanked (zero illumination to minimize disturbance at night). To use this mode menu **(4.6.3)** Idle Display is selected. Press on OK will toggle the Blank Display to be used.

If blank display is selected for inactivity display, and the radio goes into activity mode, inactivity mode will just leave the screen blank. To quickly display the position and identity information in this mode you can push the on/off button for a short time. This will show the information screen for 15 seconds before it will turn off.

4.12.2 Notations for Date and Time

On the inactivity display and when the UTC radio time needs to be manually updated the notation for time entry is:

- yyyy/mm/dd hh:mm

In all logs (DSC logs and system logs)

- dd/mm hh:mm (in overview list)
- dd/mm-yy hh:mm:ss (in detail log descriptions)

5 Errors and Warnings

Errors and warnings are shown on the screen accompanied with the sounds shown in the figure below:

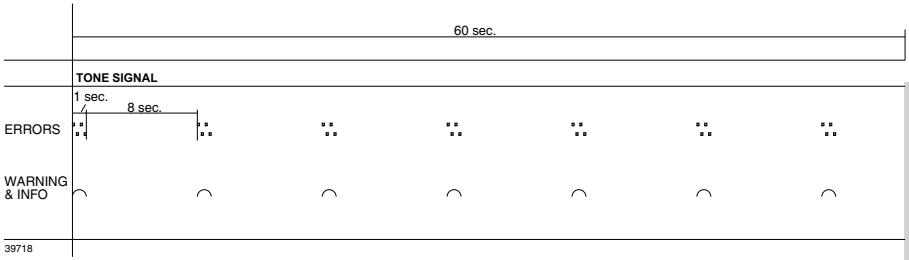

If you get an error or warning message you will always be able to shut off the alarm.

Press to finish on-going radiotelephony. This procedure will not affect the actual read-out and accept procedure for errors and warnings.

The possible warnings implemented in the system is shown in the table below:

Warning number	Warning Message	Description	Possible Reason	Required action

The possible warnings implemented in the system is shown in the table below:

Error number	Error Message	Description	Possible Reason	Required action

5.1 System Event logging

Errors received as pop-up and information windows shall be logged in the event logging system for later read out. The error logs are accessed from menu **(5.1)**.
From menu 5.2 at least the following statistics are available:

- On time (<xxxx>d <yy>h <zz>m)
- Number of Power failures
- Number of missing GPS situations
- Number of Tx activations
- Number of Transmitted DSC calls

The information is read only from front. Counters can only be reset from the service interface

5.2 Troubleshooting

If you doubt that your VHF system works properly, it is of great importance that you find the reason and assure that the equipment is properly serviced if any of the devices are failing.

You should contact your authorized dealer for tecnical support of your equipment. But, before you do that you have a list of actions you can go through to fix the problem by yourself and save time.

Detail

5.2.1 Power failure

Symptom: Radio is automatically turned off.

5.2.1.1 Ship power

In some installations ship power might occasionally disappear for a short time, e.g. if switching between land power or generator power. Your equipment will shut down immediately when power is failing. If the power does not arrive within 10 minutes the radio cannot be extected to start up automatically.

5.2.1.2 Fuses

If a push on the on/off button does not turn on the radio, and ship power is present, a fuse might need replacement. The main fuse is located on the rear side of the radio (see Figure XX). The shield is removed and the fuse is simply replaced with a new one.

— FIGUR til skift af SIKRING —

5.2.2 Self Test

Symptom: Radio operation is difficult.

It is possible to do self testing on the equipment user interface. Any entry means and readouts can be verified in the self test. The test is executed from menu **6.**
If any of the following tests are failing you should contact your authorized dealer for service.

5.2.2.1 Key Test

All push buttons can be checked using the self test in menu **6.1**. Pressing or releasing any key on the front will be echoed in the graphic display. Only exception is DISTRESS and On/Off - that will maintain their functionality. These buttons periodically be pushed for a short time to check they are functional. Pressing <menu twice will exit the test.

5.2.2.2 Display Test

The information/message display is an LCD screen. A test of all pixels in the screen is executed in menu **6.2**. Triangles are displayed on the screen.

5.2.2.3 LED Test

You can verify that all light indicators including the channel display can be lit. Running the LED test (**6.3**) will turn on all indicators for 2 seconds, whereafter these will return to their previous state.

5.2.2.4 Alarm and Audio Test

Entering this test item (**6.4**) will route the distress and urgency alarm sound to all speakers where this alarm is to be heard.

5.2.3 GPS

Sympton: Position requested.

If your radio is connected to a GPS and you receive a request on the screen to enter position and time, there it is possibility that the GPS unit is either turned off, broken or disconnected. The connection to the GPS is connected on the rear side of the radio (see Figure xx). Please check physical connection.

Until GPS signal has been restored you must update the position manually as requested by VHF.

— FIGUR til check af GPS/Option connector —

5.2.4 Accessory Connection

Symptom: Some or all of the remote units do not work

First turn off and on your VHF. Turn all remote units on if possible. Check status of the units by going into the Accessories menu 4.6.2. In this menu you can read the status of any connected device. If the status is “not found” for a particular device, it cannot be recognized by your VHF.

The communication to the remote units is going via a serial multidrop bus connection on the rear side of the radio (see Figure xx). Please check physical connection.

— FIGUR til check af SPARC connector —

If an alarm panel (APYYYY) is connected please check there is a light in the red “VHF DISTRESS” button. If not lit, fuses might need replacement in the alarm panel before the serial bus is operational.

Communication problems will not affect VHF unit functionality.

5.2.5 Device Failure

If any of the checks descibed above does not explain or help to solve the problems you have discovered, the problem might be related to the unit itself. Now you must call the authorized workshop that will make the necessary repair. When you report that you need service for your device, you can inform your dealer about the problem you see, and with the following:

- VHF
- Serial Number - found on the rear side of the radio - see Figure xx - or via the menu item **4.6.1.2**
- Firmware version - reported via menu item **4.6.1.1**

5.2.6 Missing MMSI

Symptom: DSC function is not working

If you have powered your VHF for the first time it might not have the MMSI number programmed. You must program the MMSI number before the radio is operational for DSC. Programming is done via menu item **4.5.1**

5.2.7 Radio Time

Symptom: DSC logs are sorted with a wrong time stamp, or radio time is not correct.

The problem with a wrong radio time should only occur if the GPS is not connected in the system. A valid GPS time signal will update the UTC time that is used for time stamping logs only.

If you have a system without GPS, where you manually update position and time, it is also required that you enter the radio time - at least right after power-up, if you want to get correct time stamps on DSC logs. The UTC time is also used as the proposed time each time you are requested to enter position and time manually (each 4 hours).

5.2.8 Channel Not Free

5.2.8.1 DSC Channel not free

Symptom: DSC transmission is delayed

DSC calls that are not distress or urgency calls will not be sent if the VHF is in the middle of decoding a DSC call. The transmission will be delayed until decoding has finished.

5.2.8.2 Working Channel not free

Symptom: No proposed working channel in station call

In a DSC station call a working channel is proposed. If for some reason a working channel is not found within 1 second, no channel is proposed. If you see this problem please check the following:

- Adjust to a higher squelch setting. If the squelch is always open no free working all channels will be recognised as occupied.

6 Menu Tree

This section lists the full menu tree for the VHF.

The table describes the un-regretted forward flow that is initiated after selection of certain menu items. Generally, pushing ◀Menu in the menu tree or flow sequence will return to the previous window.

1 *DSC Call*	1.1 Station Call			
	1.2 PSTN Call			
	1.3 Group Call			
	1.4 Emergency	1.4.1 Compose Distress		
		1.4.2 Compose Urgency	1.4.2.1 All Ships	
			1.4.2.2 Individual	
		1.4.3 Compose Safety	1.4.3.1 All Ships	
			1.4.3.2 Individual	
		1.4.4 Compose Relay	1.4.4.1 Distress Relay	1.4.4.1.1 *All Ships*
				1.4.4.1.2 *Individual*
			1.4.4.2 Distress Relay Acknowledgement	
		1.4.5 Compose Distress Ackn.		
	1.5 DSC Logs	1.5.1 DSC Distress Log		
		1.5.2 DSC Receive Log		
		1.5.3 DSC Transmit Log		
2 *Contacts*	2.1 Call Contact			
	2.2 Show Contact			
	2.3 Add Contact			
	2.4 Edit Contact			
	2.5 Delete Contact			
3 *Scanning*	3.1 Scan All Channels			
	3.2 Scanning Table A			
	3.3 Scanning Table B			
	3.4 Scanning Table C			
	3.5 Edit Scanning Tables	3.5.1 Scan Table A		
		3.5.2 Scan Table B		
		3.5.3 Scan Table C		

4 ***Settings***	**4.1 Position & Time**	**4.1.1 Set Position & Time**	
		4.1.2 Radio Time	
		4.1.3 Position Info	
	4.2 Display Contrast		
	4.3 Audio	**4.3.1 Handset Volume**	
		4.3.2 Alarm Tones	**4.3.2.1** Warning
			4.3.2.2 Routine
			4.3.2.3 Safety Call
	4.4 Channels	**4.4.1 Channel Mode**	**4.4.1.1** Int
			4.4.1.2 US
			4.4.1.3 BIN
			4.4.1.4 CAN
		4.4.2 Channel Info	
		4.4.3 ATIS Call sign	
	4.5 DSC Setup	**4.5.1 MMSI Number**	
		4.5.2 Group Numbers	
		4.5.3 Special Calls	
		4.5.4 Auto acknowledgement	
		4.5.5 Auto Channel Switch	
	4.6 System	**4.6.1 Device Identification**	**4.6.1.1** Software Version
			4.6.1.2 Serial Number
		4.6.2 Accessories	**4.6.2.1** Alarm Panel
			4.6.2.2 GPS
			4.6.2.3 LAN Interface
			4.6.2.4 Printer
			4.6.2.5 Optional Handsets
		4.6.3 Idle Display	
5 ***System***	**5.1 Errors**		
	5.2 Statistics		
6 ***Self Test***	**6.1 Key Test**		
	6.2 Display Test		
	6.3 LED Test		
	6.4 Alarm Test		

7 Optional Functional Devices

The maximum system configuration possible with your VHF installation with VHF is shown in the first part of the installation section.

The present chapter will describe the functionality and behaviour of the following optional functional devices:

- 1 or 2 remote handset control units
- One Alarm Panel
- Printer + LAN interface + Printer Server

7.1 Semifunctional Control Unit

The semifunctional control unit is an optional unit connecting an additional handset remote to the VHF. Installation of control units should only be performed by an authorized service person.

7.1.1 Controls and Indicators

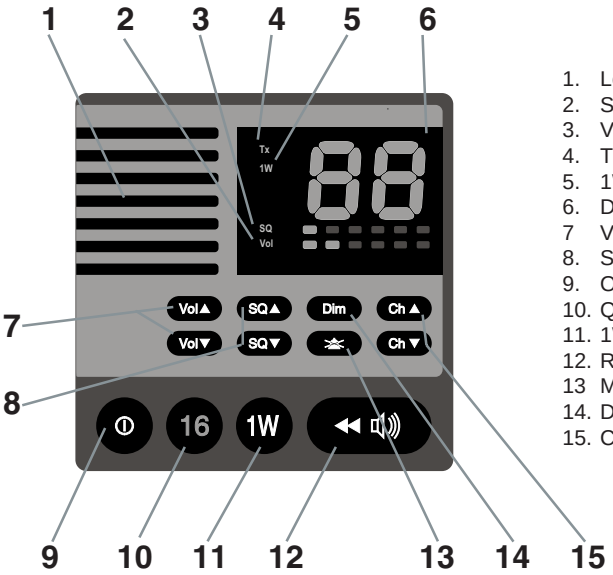

1. Loudspeaker
2. Squelsh level indicator
3. Volume level indicator
4. Tx
5. 1W
6. Display
7 Volume up/down
8. Squelch up/down
9. ON/OFF
10. Quick-select key for channel 16.
11. 1W
12. Replay push button
13 Mute alarm
14. Dimming
15. Channel up/down

7.1.2 Operation

The optional handset is intended for VHF radiotelephony only. There will be no DSC functionality supported except for:

- The functionality or lifting the CU handset follows the default handset on the main radio (see Section **DSC receive**), when receiving a DSC call.
- Possibility to mute DSC alarm sound – not handle the DSC call.

7.1.3 ON/OFF

The semi-intelligent handset will always be turned off default after VHF unit is powered. The off state is indicated by no activity or light in the CU.

The unit can be turned on and off (press for 1 second) on the ON button.

If the main unit is powered off the handset control unit is always turned off.

System

7.1.4 Channel Selection

Channel selection is done using exactly the method described for VHF using

▲ and ▼.

On the optional handset control unit these buttons are marked

Ch ▲ and Ch ▼ respectively.

Channel change requests are sent to the main VHF unit and the main unit will change channel and update the CU display. The same channel number will be applied to all the displays in the system.

A quick channel 16 selection is available pushing 16.

7.1.5 Volume

Volume is controlled using the Vol▲ and Vol▼ buttons.

Pushing these buttons will only affect the internal CU speaker as well as optionally connected external CU speakers. The volume adjustment will only be active for the specific local handset. Therefore the volume bar on the VHF main unit is not updated during adjustment.

A local volume indicator always shows the speaker volume on the CU. If the volume is adjusted to the mute level the VOL LED will blink (1 Hz).

The earpiece volume in the handset connected to the CU is adjusted using the

Vol▲ and Vol▼ buttons while holding down the button.

This alternative usage of the button will only be possible while:

- Handset is hooked off, and
- No active alarm sound to be muted

After power-up all volume levels set during last operation are restored as they were before power-down.

7.1.6 Squelch

Squelch level can be adjusted using the SQ▲ and SQ▼ buttons.

Operating the buttons will contribute to the global squelch setting on the radio. Squelch indicators on the handset CU and on the main unit will always follow each other regardless of the control input used for adjustment.

NOTE: If a channel is reached where the squelch setting was programmed from the main unit, squelch control will set the level for that particular channel, but will **not** reset the squelch programming as would be the case if adjusted from the main unit.

7.1.7 Dimming

Dimming the control unit display and keypad backlight and 1W LED is done exactly as described for the VHF, but with no graphical information.

7.1.8 Muting Alarms

If a DSC call is received (distress or routine) the alarm tone is heard as a mixing of the received voice audio in the speakers and earpieces in the system. Pushing the button will mute any alarm sound, and only received voice is heard in the speakers.

Normal radiotelephony calls can be acknowledged from the semi-intelligent handset making the HS hooked to HS un-hooked transition.

System

7.1.8 Transmitter Power

Pushing the 1W button will have the same effect as described for VHF. 1W LED on CU will follow the 1W LED on main unit.

7.1.9 Replay

The replay facility works exactly the same as described for the VHF main unit when the

button is pressed.

The navigator counter (seconds back in received signal) is shown on the CU display.

7.1.10 Dual Watch and Scanning

There are no possibilities to control dual watch or scanning. During dual watch initiated from the main VHF the working channel is displayed in the display. During scanning the display is indicating this by “SC”.

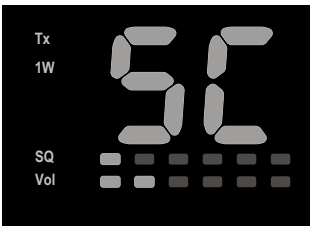

Locking on any channel will of course switch the display to that channel.

7.1.11 Multiple Handsets in the System

If multiple handsets are connected in the system the following priority is given (to PTT – microphone control) if multiple handsets are lifted:

- Default handset is always given priority if lifted.
- Any optional handset lifted first takes priority over another optional handset.

A warning “OC” is written in the display near any handset (VHF unit or CU) that has lower priority, as soon the prioritized handset is lifted.

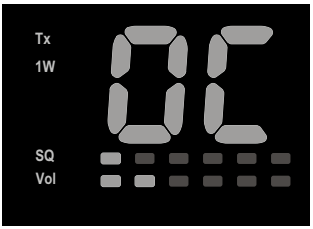

If an optional handset is not given priority (“OC” written in display) it will only be possible to use the following buttons on the CU:

System

7.1.12 Optional Handset CU VHF Operation while Main Unit is in Menu or Text Entry Mode

If the main VHF unit is operated in menu or text entry mode, there will be certain buttons on the VHF main unit that does not respond to their primary functions. Seen from a CU perspective all functionality is maintained if “OC” is not shown in the telephone display.

7.2 Alarm Panel

The Alarm Panel will – if connected correctly to the VHF be illuminated in the red “VHF DISTRESS” push button.

7.2.1 Distress Initiation

Only undesignated distress can be sent from the alarm panel.

The distress is sent lifting the lid over the VHF DISTRESS button on Alarm Panel and press the button for 5 seconds. A sound is heard each second. After 5 seconds a constant sound is heard, indicating you have sent the distress. You can now release the button. The alarm sound in the alarm panel can be muted pressing the on the Alarm Panel.

The VHF is now in distress state. You must now continue the distress traffic and procedures in front of your VHF if possible. The procedures are now the same as described for handling distress state from the main unit.

7.3 Printer

If a printer is connected in the system you have the possibilities to print out single DSC messages, DSC logs – in both cases accessible from the DSC log menu. You can also print out errors and warnings from the event log.

The VHF will send messages via the printer driver implemented in the LAN interface. If the printer is not on-line (powered off, out of paper) your VHF will inform you that printing was not possible. Otherwise it will just start printing.

Reasons for the missing printer ability will be fetched from the printer driver and listed on the VHF information/message display:

Error number	Printer Message	Description	Possible Reason	Required action

8 Maritime Channels

8.1 International Channels

Channels	TX MHz	RX MHz	SIMPLEX Intership	SIMPLEX Port	DUPLEX Port	DUPLEX Public
1	156,050	160,650			●	●
2	156,100	160,700			●	●
3	156,150	160,750			●	●
4	156,200	160,800			●	●
5	156,250	160,850			●	●
6	156,300	156,300	●			
7	156,350	160,950			●	●
8	156,400	156,400	●			
9	156,450	156,450	●	●		
10	156,500	156,500	●	●		
11	156,550	156,550		●		
12	156,600	156,600		●		
13	156,650	156,650	●	●		
14	156,700	156,700		●		
15	156,750	156,750	●	●		
16	156,800	156,800	**Distress and calling**			
17	156,850	156,850	●	●		
18	156,900	161,500			●	●
19	156,950	161,550			●	●
20	157,000	161,600			●	●
21	157,050	161,650			●	●
22	157,100	161,700			●	●
23	157,150	161,750			●	●
24	157,200	161,800			●	●
25	157,250	161,850			●	●
26	157,300	161,900			●	●
27	157,350	161,950			●	●
28	157,400	162,000			●	●

Channels	TX MHz	RX MHz	SIMPLEX Intership	SIMPLEX Port	DUPLEX Port	DUPLEX Public
60	156,025	160,625			●	●
61	156,075	160,675			●	●
62	156,125	160,725			●	●
63	156,175	160,775			●	●
64	156,225	160,825			●	●
65	156,275	160,875			●	●
66	156,325	160,925			●	●
67	156,375	156,375	●	●		
68	156,425	156,425		●		
69	156,475	156,475	●	●		
70	156,525	156,525	**DSC**	**DSC**		
71	156,575	156,575		●		
72	156,625	156,625	●			
73	156,675	156,675	●	●		
74	156,725	156,725		●		
75	156,775	156,775		● L)		
76	156,825	156,825		● L)		
77	156,875	156,875	●			
78	156,925	161,525			●	●
79	156,975	161,575			●	●
80	157,025	161,625			●	●
81	157,075	161,675			●	●
82	157,125	161,725			●	●
83	157,175	161,775			●	●
84	157,225	161,825			●	●
85	157,275	161,875			●	●
86	157,325	161,925			●	●
87	157,375	157,375		● *)		
88	157,425	157,425		● *)		

Notes:

L) 1W TX power

***)** Channels 87 and 88 became simplex channels following the introduction of Automatic Identification channels AIS1 at 161.975MHz and AIS2 on 162.025MHz.

NB! The RX and TX frequencies can be read from menu (4.4.2).

System

8.2 US Channels

Channels	TX MHz	RX MHz	SIMPLEX	DUPLEX
1	156,050	156,050	●	
2				B)
3	156,150	156,150	● !)	
4				B)
5	156,250	156,250	●	
6	156,300	156,300	●	
7	156,350	156,350	●	
8	156,400	156,400	●	
9	156,450	156,450	●	
10	156,500	156,500	●	
11	156,550	156,550	●	
12	156,600	156,600	●	
13	156,650	156,650	● L)	
14	156,700	156,700	●	
15		156,750	● RX)	
16	156,800	156,800	Distress and calling	
17	156,850	156,850	●	
18	156,900	156,900	●	
19	156,950	156,950	●	
20	157,000	157,000	●	
21	157,050	157,050	● !)	
22	157,100	157,100	●	
23	157,150	157,150	● !)	
24	157,200	161,800		●
25	157,250	161,850		●
26	157,300	161,900		●
27	157,350	161,950		●
28	157,400	162,000		●

Channels	TX MHz	RX MHz	SIMPLEX	DUPLEX
60				B)
61	156,075	156,075	● !)	
62				B)
63	156,175	156,175	●	
64	156,225	156,225	● !)	
65	156,275	156,275	●	
66	156,325	156,325	●	
67	156,375	156,375	● L)	
68	156,425	156,425	●	
69	156,475	156,475	●	
70	156,525	156,525	DSC	
71	156,575	156,575	●	
72	156,625	156,625	●	
73	156,675	156,675	●	
74	156,725	156,725	●	
75			B)	
76			B)	
77	156,875	156,875	● L)	
78	156,925	156,925	●	
79	156,975	156,975	●	
80	157,025	157,025	●	
81	157,075	157,075	● !)	
82	157,125	157,125	● !)	
83	157,175	157,175	● !)	
84	157,225	161,825		●
85	157,275	161,875		●
86	157,325	161,925		●
87	157,375	161,975		●
88	157,425	157,425	●	

Channels	WX	RX MHz
P1	WX1	162,550
P2	WX2	162,400
P3	WX3	162,475
P4	WX4	162,425
P5	WX5	162,450
P6	WX6	162,500
P7	WX7	162,525
P8	WX8	161,650
P9	WX9	161,775
P10	WX10	163,275

Notes:

L) 1 W TX power. Pressing the 25W button in the US rest will make the unit transmit at 25W on channel 13 and 67, normally limited to 1W.

B) Channels 2, 4, 60, 62, 75 and 76 cannot be selected in US mode.

!) Channels 3, 21, 23, 61, 64, 81, 82 and 83 may be legally used in some circumstances but not by the general public in US waters.

RX) Only RX: transmissions are blocked.

NB! The RX and TX frequencies can be read from menu **(4.4.2)**.

8.3 BI Channels

Channels	TX MHz	RX MHz	SIMPLEX Intership	SIMPLEX Port	DUPLEX Port	DUPLEX Public
1	156,050	160,650			●	●
2	156,100	160,700			●	●
3	156,150	160,750			●	●
4	156,200	160,800			●	●
5	156,250	160,850			●	●
6	156,300	156,300	● L)			
7	156,350	160,950			●	●
8	156,400	156,400	● L)			
9	156,450	156,450	●	●		
10	156,500	156,500	● L)	● L)		
11	156,550	156,550		● L)		
12	156,600	156,600		● L)		
13	156,650	156,650	● L)	● L)		
14	156,700	156,700		● L)		
15	156,750	156,750	● L)	● L)		
16	156,800	156,800	**Distress and calling**			
17	156,850	156,850	● L)	● L)		
18	156,900	161,500			●	●
19	156,950	161,550			●	●
20	157,000	161,600			●	●
21	157,050	161,650			●	●
22	157,100	161,700			●	●
23	157,150	161,750			●	●
24	157,200	161,800			●	●
25	157,250	161,850			●	●
26	157,300	161,900			●	●
27	157,350	161,950			●	●
28	157,400	162,000			●	●

Channels	TX MHz	RX MHz	SIMPLEX Intership	SIMPLEX Port	DUPLEX Port	DUPLEX Public
60	156,025	160,625			●	●
61	156,075	160,675			●	●
62	156,125	160,725			●	●
63	156,175	160,775			●	●
64	156,225	160,825			●	●
65	156,275	160,875			●	●
66	156,325	160,925			●	●
67	156,375	156,375	●	●		
68	156,425	156,425		●		
69	156,475	156,475	●	●		
70	156,525	156,525	**DSC**	**DSC**		
71	156,575	156,575		● L)		
72	156,625	156,625	● L)			
73	156,675	156,675	●	●		
74	156,725	156,725		● L)		
75	156,775	156,775		● L)		
76	156,825	156,825		● L)		
77	156,875	156,875	● L)			
78	156,925	161,525			●	●
79	156,975	161,575			●	●
80	157,025	161,625			●	●
81	157,075	161,675			●	●
82	157,125	161,725			●	●
83	157,175	161,775			●	●
84	157,225	161,825			●	●
85	157,275	161,875			●	●
86	157,325	161,925			●	●
87	157,375	157,375		● *)		
88	157,425	157,425		● *)		

Channels

Notes:

L) 1W TX power on channels 6, 8, 10, 11, 12, 13, 14, 15, 17, 71, 72, 74 , 75, 76 and 77.

***)** Channels 87 and 88 became simplex channels following the introduction of Automatic Identification channels AIS1 at 161.975MHz and AIS2 on 162.025MHz.

NB! The ATIS function is enabled on all channels. RX and TX frequencies can be read using menu **(4.4.2)**.

9 Installation

9.1 Mounting possibilities

VHF

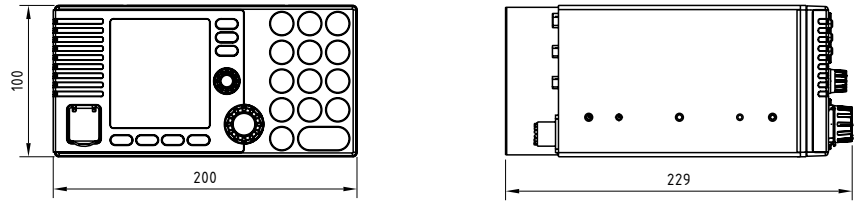

39653

VHF with Mounting Bracket

tegning mangler

Mounting option

tegning mangler

Drilling plan

tegning mangler

Weight:

VHF	3.6 kg
Mounting Bracket	1.0 kg

Handset for Transceiver

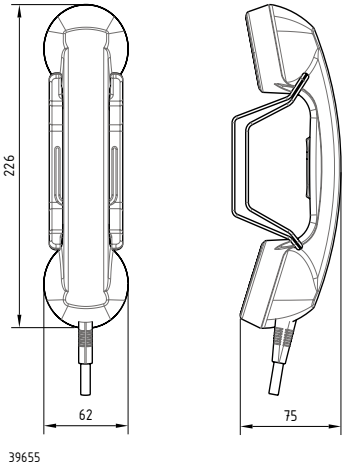

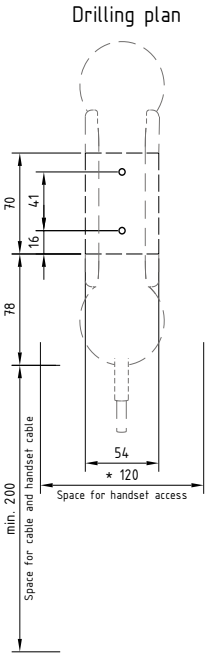

Weight

Handset for Transceiver 0.4 kg

Installation

Semifunctional Control Unit

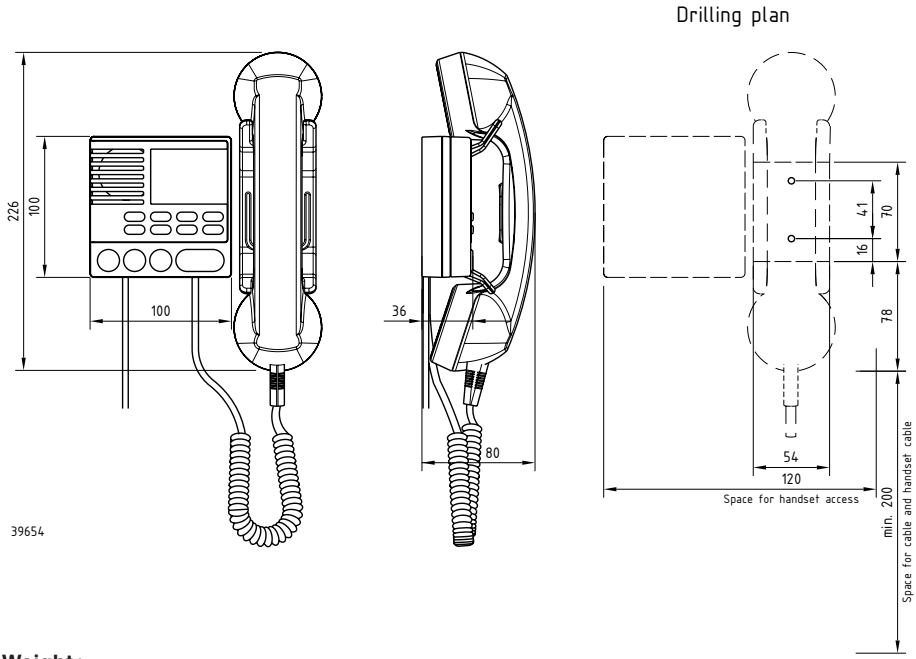

Weight :
Semifunctional Control Unit 1.2 kg

Remote control units are connected as shown on xxx.

Adding a single CU
After the CU is connected the unit can be operated straight forward without any additional configuration.

Installing with 2 CUs
If a new installation has been made with 2 handset CUs, and the CUs are both powered for the first time, it is important that the CUs are not turned on exactly at the same time.

If an extra new CU has been installed in a system already working with a single CU, the already existing CU must be switched on prior to the first power-on of the new CU.

Connection Box

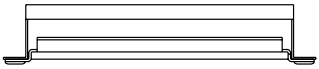

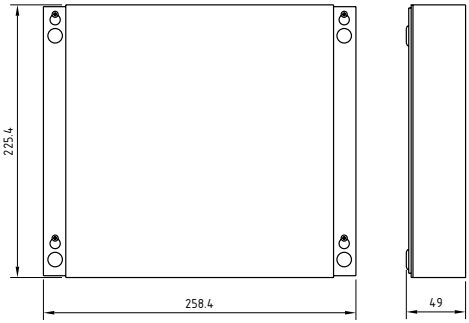

Drilling plan

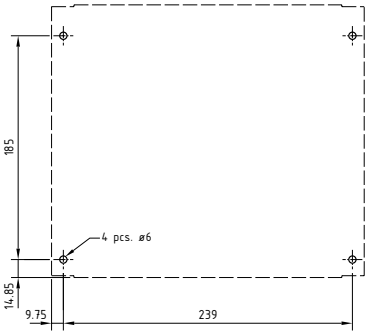

Mounting

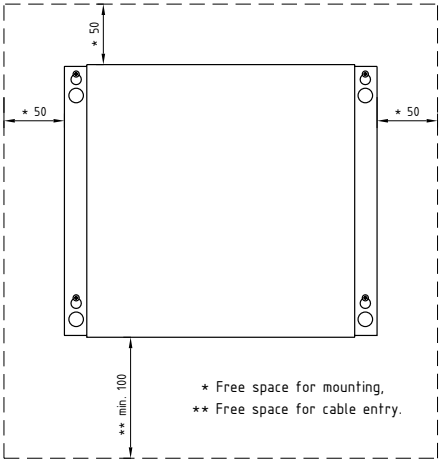

39656

Weight

Connection Box	1.7 kg

Extension Box

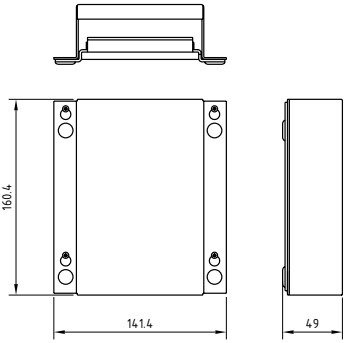

Drilling plan

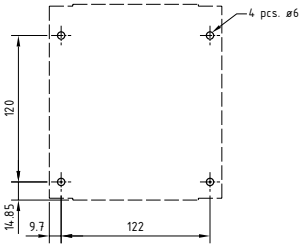

Mounting

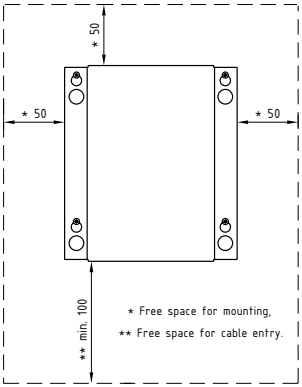

39657

Weight
Extension Box ??0.7 kg

Installation

LAN Box

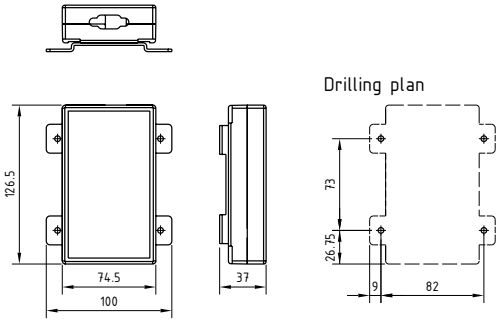

Mounting

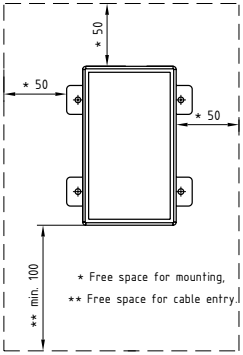

39658

Weight

LAN Box	0.3 kg

Installation

9.2 Interface connections

VHF (rear view)

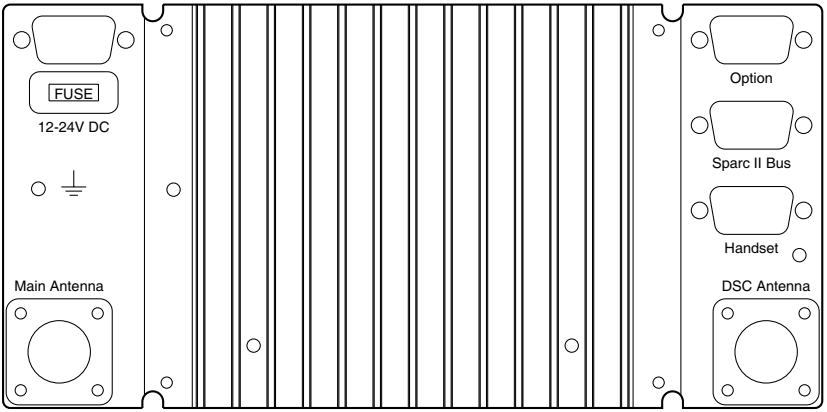

39815

Connection box board 639121

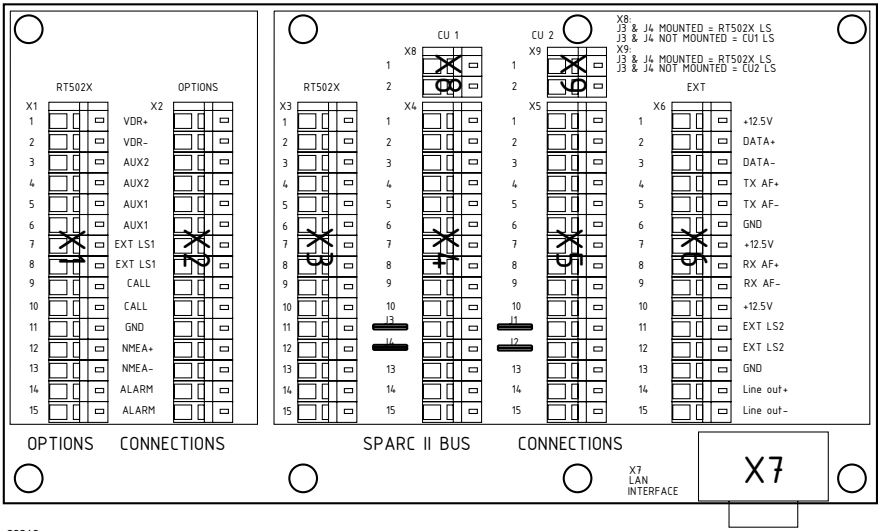

39816

Extension box board 639123

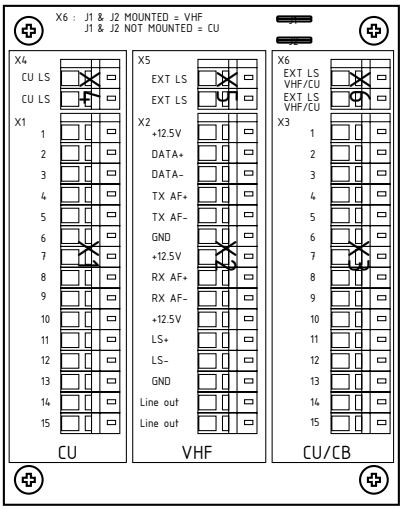

39817

Installation

Interfaces

Options Connections

VHF Options Connector 15-pin D-sub male	Signal Designation	Cable	Connection box In from VHF	Connection box External conn.	Signal description	Ships cable 8 twisted pairs overall screen
pin 1	VDR+		X1-1	X2-1	Mixed Rx/Tx audio output for recording. Galvanically isolated, balanced signal, 0dBm/600Ω	pair no. 1
pin 2	VDR-		X1-2	X2-2		pair no. 1
pin 3	AUX2		X1-3	X2-3	Relay contact closing on event pre-defined through service programming (see note 1)	pair no. 2
pin 4	AUX2 NO		X1-4	X2-4		pair no. 2
pin 5	AUX 1		X1-5	X2-5	Relay contact closing on event pre-defined through service programming (see note 1)	pair no. 3
pin 6	AUX 1 NO		X1-6	X2-6		pair no. 3
pin 7	int_Speaker +		X1-7	X2-7	VHF internal speaker output, rating 8ohm, 6W max.	pair no. 4
pin 8	int_Speaker -		X1-8	X2-8		pair no. 4
pin 9	DSC CALL		X1-9	X2-9	Relay contact closing on incoming DSC call (see note 1)	pair no. 5
pin 10	DSC CALL NO		X1-10	X2-10		pair no. 5
pin 11	GND		X1-11	X2-11	Equipment ground	pair no. 8
pin 12	NMEA +		X1-12	X2-12	NMEA data input from external position sensor (note 2)	pair no. 6
pin 13	NMEA -		X1-13	X2-13		pair no. 6
pin 14	DSC ALARM		X1-14	X2-14	Relay contact closing on incoming Distress alert (see note 1)	pair no. 7
pin 15	DSC ALARM NO		X1-15	X2-15		pair no. 7
					spare	pair no. 8

Note 1: Relay contact ratings (resistive load)
Max. switched power: 30W or 60VA
Max. switched current: 1.0A
Max. switched voltage: 150VDC or 125VAC

Note 2: Following NMEA sentences are supported: GLL, RMC, ZDA, GGA, VTG, GNS in accordance with IEC61162-1

SPARC Connections

VHF SPARC Connector 15-pin D-sub female	Signal Designation	Cable p/n 56.114	Connection box In from VHF	Connection box Out to CU1 or	Connection box Out to CU2 or Extension box	Connection box Alarm Panel	Signal description	Ships cable 8 twisted pairs overall screen
pin 1	12.5VDC+		X3-1	X4-1	X5-1	X6-1		pair no. 8
pin 2	DATA_+		X3-2	X4-2	X5-2	X6-2	SPARC-bus Data	pair no. 1
pin 3	DATA_-		X3-3	X4-3	X5-3	X6-3		pair no. 1
pin 4	TX_AF+		X3-4	X4-4	X5-4	X6-4	SPARC-bus Tx audio	pair no. 2
pin 5	TX_AF-		X3-5	X4-5	X5-5	X6-5		pair no. 2
pin 6	GND		X3-6	X4-6	X5-6	X6-6	Equipment ground	pair no. 6
pin 7	12.5VDC+		X3-7	X4-7	X5-7	X6-7		pair no. 6
pin 8	RX_AF+		X3-8	X4-8	X5-8	X6-8	SPARC-bus Rx audio	pair no. 3
pin 9	RX_AF-		X3-9	X4-9	X5-9	X6-9		pair no. 3
pin 10	12.5VDC+		X3-10	X4-10	X5-10	X6-10		pair no. 7
pin 11	EXT.Speaker +		X3-11	X4-11	X5-11	X6-11	VHF radio external speaker output, 8Ω/6W min.	pair no. 4
pin 12	EXT.Speaker -		X3-12	X4-12	X5-12	X6-12		pair no. 4
pin 13	GND		X3-13	X4-13	X5-13	X6-13	System ground	pair no. 7
pin 14	Lineout +		X3-14	X4-14	X5-14	X6-14	Mixed Rx/Tx audio line output, xxmV/47k	pair no. 5
pin 15	Lineout -		X3-15	X4-15	X5-15	X6-15		pair no. 5
							spare	pair no. 8
	EXT LS			X8-1	X9-1		External speaker output, rating 8Ω/6W max. (**see NOTE**)	
	EXT LS			X8-2	X9-2			

NOTE: In case of connecting CU1 and/or CU2 directly to Connection Box, i.e. not utilizing Extension Box for each CU, jumpers J1/J2 and/or J3/J4 must be cut to disconnect VHF Ext. Speaker output from these terminals and make available the CU Ext. Loudspeaker connection and provide the CU1/CU2 External speaker connection respectively.

9.2.1 System Block diagram with Connection Box and 2 x Extension Box

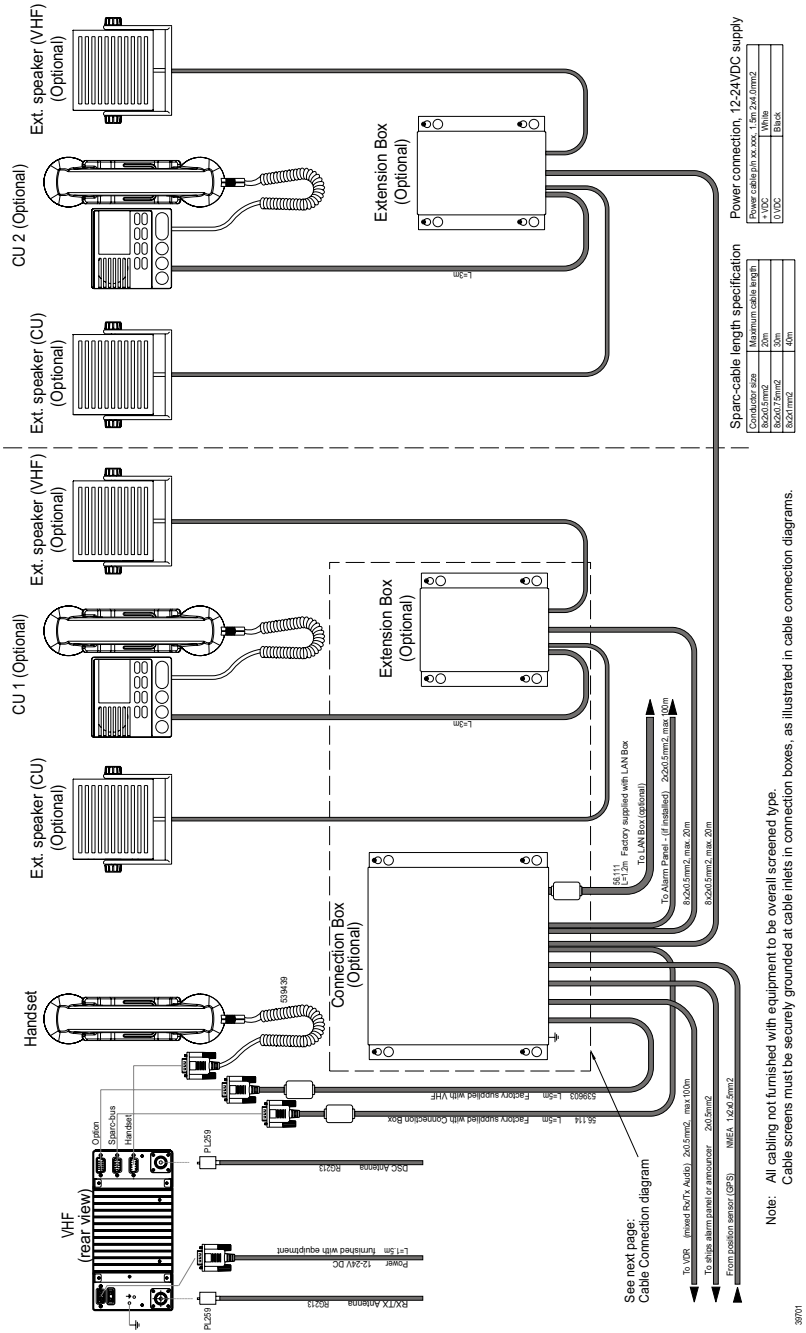

Note: All cabling not furnished with equipment to be overall screened type.
Cable screens must be securely grounded at cable inlets in connection boxes, as illustrated in cable connection diagrams.

Cable Connection Diagram

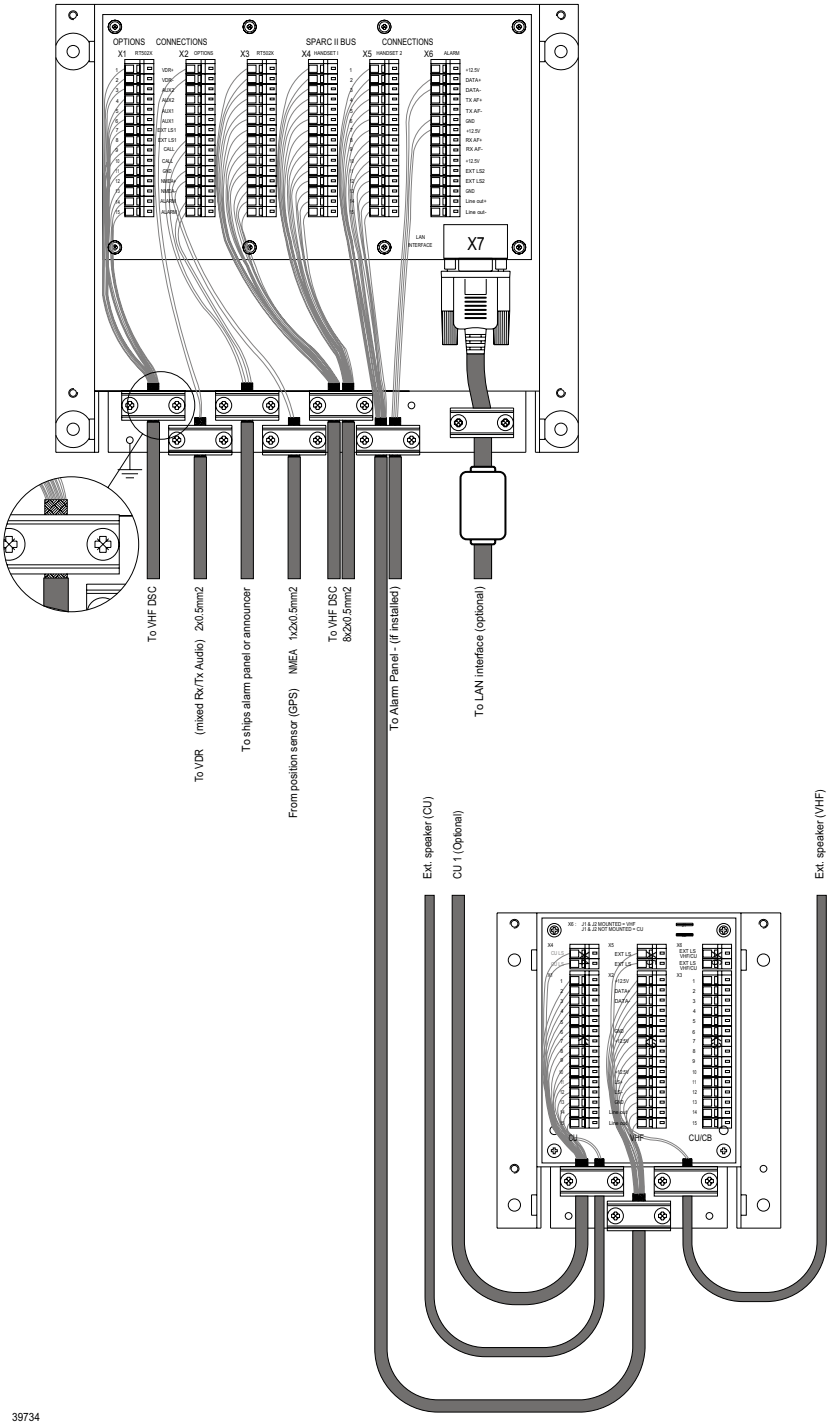

Installation

9.2.2 System Block diagram with Extension Box

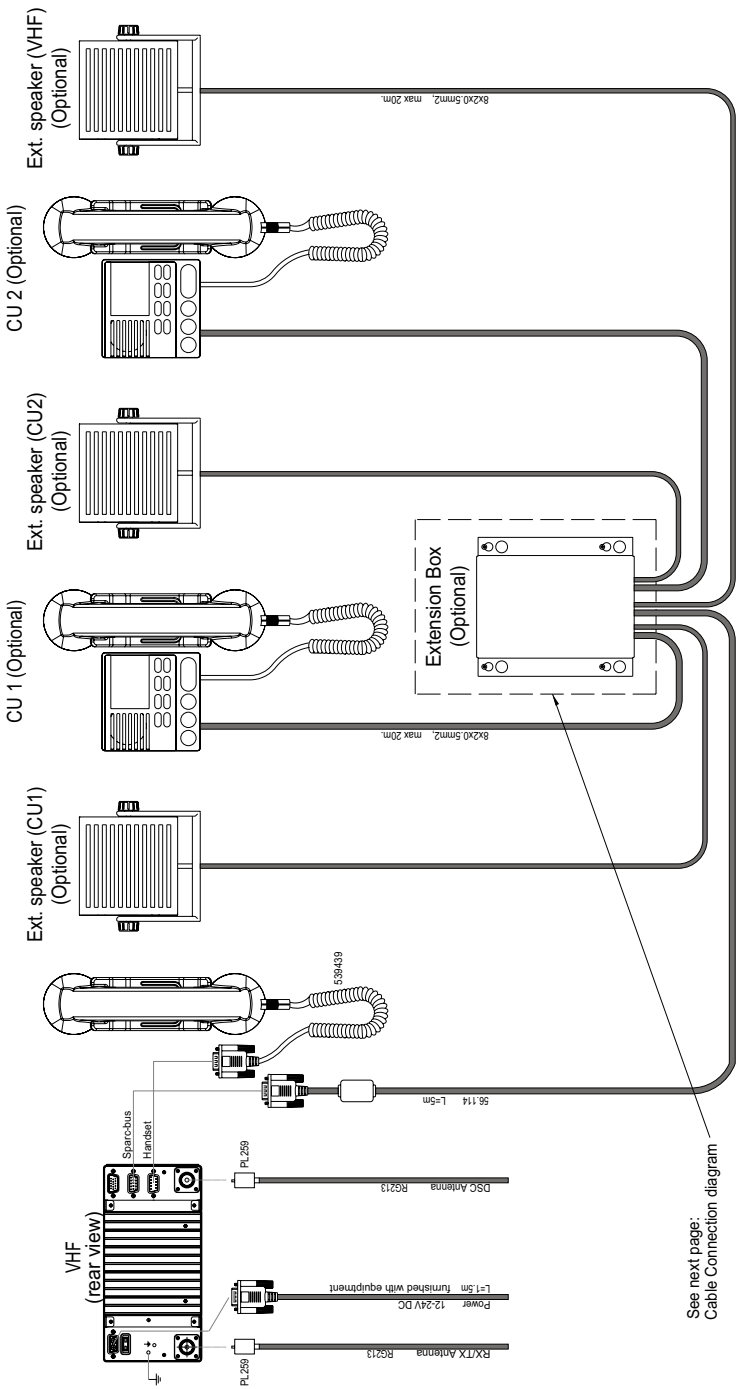

Power connection, 12-24VDC supply

Power cable p/n xx.xxx, 1.5m 2x4.0mm2	
+ VDC	White
0 VDC	Black

Sparc-cable length specification

Conductor size	Maximum cable length
8x2x0.5mm2	20m
8x2x0.75mm2	30m
8x2x1mm2	40m

Note: All cabling not furnished with equipment to be overall screened type.
Cable screens must be securely grounded at cable inlets in connection boxes, as illustrated in cable connection diagrams.

39702

Cable Connection Diagram

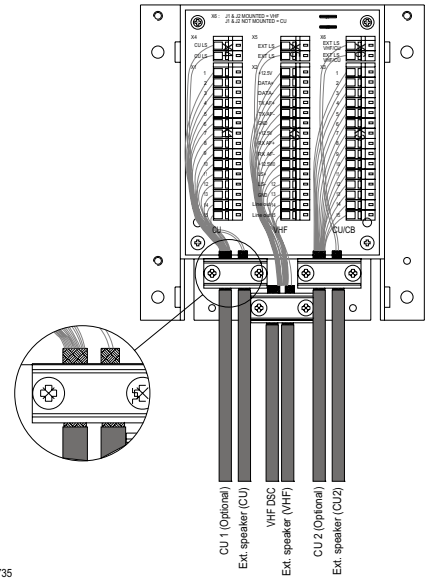

9.3 Power supply

The VHF should be powered from a separately fused DC-supply of 10.8 - 32VDC and rated at minimum 120W continuous power.

9.4 Antenna installation and precautions

9.4.1 Antennas

The VHF equipment requires two antennas installed, one for the DSC receiver and the other (Primary) for the VHF Rx/Tx communication.
All commonly available 50 ohm antennas covering the appropriate frequency range and exhibiting a VSWR less than 1.5 over this range, may be used.
The antennas should be connected using a low loss type 50 ohm coaxial cable, e.g. good quality RG213.
IMO recommendations state a minimum of 6W RF power to be available at the VHF transmitting antenna thus implying that the absolute maximum power loss across the antenna cable length (incl. connectors) for 25W power output available from the VHF may be 18W (i.e. 6dB power loss). The maximum cable length thus depends on the quality of the cable used, i.e. the specified attenuation (dB/m) imposed by the cable at the high end of the VHF frequency band. As a rule of thumb the cable length using RG213 coaxial cable should not exceed 40m.
Note: A corresponding degradation of receiver sensitivity is imposed on the installation, i.e. if the installed cable length exhibits a power loss of 6dB the reception sensitivity is also reduced by 6dB.

9.4.2 RX/TX antenna

In installations consisting of two or more VHF radios it is important to ensure the optimum performance of these by carefully selecting the mutual antenna positions.
In general the highest possible RF attenuation between the VHF RX/TX antennas in the installation should be sought for. The most important parameter in achieving this is by ensuring that none of the RX/TX antennas in the installation are positioned at the same horizontal level, i.e. the RX/TX antennas must be installed at shifted elevations as indicated below.
In situations where sufficient vertical distance between two or more such antennas is found difficult to obtain the horizontal distance between them will play an increasingly important role in the equipment performance the less the vertical separation and as a minimum 5m horizontal distance between any RX/TX antennas in the installation should be ensured.

Additionally, in order to minimize any increase in VSWR exhibited by the VHF RX/TX antenna this should be installed in a distance no closer to any other mast/pole object or other RF antennas than which corresponds to the physical length of the antenna itself, i.e. an antenna of e.g. 1.2m length should be installed no closer than 1.2m to any other superstructure object or RF antenna.

To the widest possible extend the VHF antennas should be kept out of the antenna main beam of any radar and satellite equipment.

9.4.3 DSC antenna

The positioning of the DSC antennas is less critical in terms of the imposed VSWR and due to the nature of the DSC-signalling. It should be noted however, that the DSC receiver of a VHF is likely to be temporarily blocked in reception due to high signal blocking, if the associated DSC antenna is installed in close vicinity of a RX/TX antenna at the same horizontal level while transmission takes place from this RX/TX antenna.

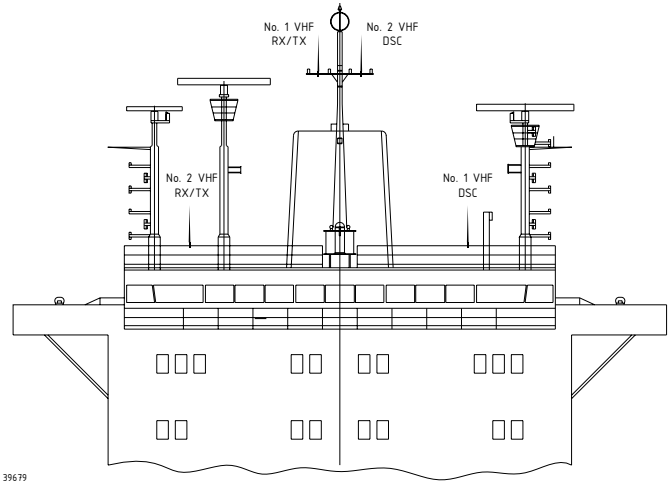

Example of VHF antenna arrangement.

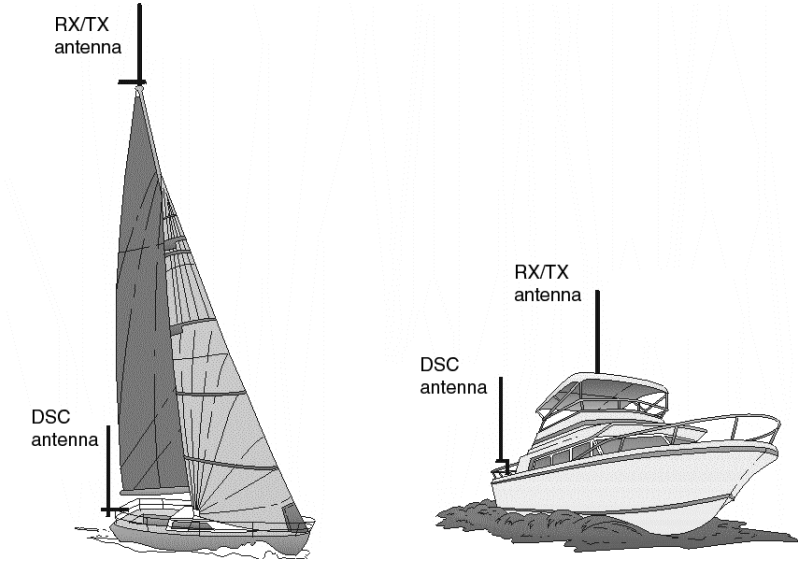

Example of VHF antenna arrangement.

10 Technical specification

General

Normal channels	All int. channels. Up to 30 private channels in 3 separate banks designated **F**,**P** or **L**. Each bank contains 10 private channels.
US channels	All US channels according to Radio Regulations.
BI channels	All BI channels according to Radio Regulations.
Channel spacing	25 KHz
Operation modes	Simplex /Semi-duplex
Modulation	G3EJN for Telephony G2B for DSC.
Frequency stability	less than ± 3 ppm
Aerial connectors	Standard 50 ohm female SO239
Temperature range	-15°C to +55°C
Supply voltage	12V to 24V DC nominal
Maximum supply voltage range	10.8V to 31.2V DC
Transceiver dimensions	H*W*D 100*200*210 mm
Transceiver weight	3.6 Kg

Receiver

Standard frequency range	155.50 – 162.55 MHz
Optional frequency range	149.30 – 163.75 MHz
Sensitivity for 20 dB SINAD	
CCITT weighted	less than -121 dBm or 0.20 ìV p.d.
AF rated Power	
Internal L.S.	5 Watt in 8 ohm
Output for External L.S.	5 Watt in 8 ohm
Distortion	less than 5 %
S/N ratio	more than 43 dB
Spurious emission	less than 0,25 nW
Spurious response rejection	more than 74 dB
Intermodulation response	more than 73 dB
Co- channel rejection	better than –10 dB
Adjacent channel selectivity	more than 74 dB
Blocking level	more than 94 dBìV

Transmitter

Standard frequency range	155.50 – 157.50 MHz
Optional frequency range	149.30 – 163.75 MHz
RF output power	
High	25W +0dB to –0.5dB
Low	0,85 W +0.5dB to –1dB
Adjacent channel power	less than 75 dB
Conducted spurious emission	less than 0.1 nW
Distortion	less than 5 %
S/N ratio	better than 46 dB

DSC facilities

DSC operation	According to Rec. ITU-R M.541-9 and Rec. ITU-R M.689-2
DSC protocol	According to Rec. ITU-R M.493-11 Class A
Navigator interface	According to IEC 61162-1 GLL, RMC, ZDA, GGA, VTG, GNS

Symbol error rate below $1*10^{-2}$	-121 dBm or 0.20 µV p.d.
Modulation	1700 Hz ± 400 Hz 1200 baud
Frequency error	less than ± 1 Hz
Residual modulation	less than –26 dB