TP-LINK®

The Reliable Choice

Installation Guide

Outdoor CPE

CPE210 / CPE220 / CPE510 / CPE520

CONTENTS

Overview 1

Hardware Connection

Site Consideration 3

Ethernet Cable Selection 5

Connection and Installation 6

Lightning & ESD Protection 7

Software Configuration

Login to Pharos 8

Antenna Alignment 11

Specifications 12

Frequently Asked Questions (FAQ) 13

Overview

TP-LINK's Pharos series outdoor CPEs are dedicated to remote point-to-point connection. This guide is applicable to products including CPE210, CPE220, CPE510 and CPE520.

• Package Contents

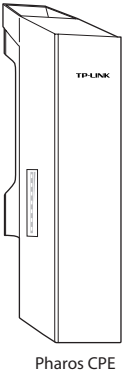

Pharos CPE

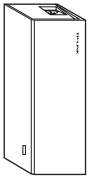

Passive PoE Adapter

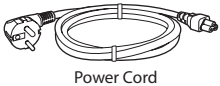

Power Cord

Pole Mounting Straps

Installation Guide

TERMS OF USE: TP-LINK's Pharos series outdoor CPEs must be professionally installed. Shielded Ethernet cable and earth grounding must be used as conditions of product warranty. TOUGHCable is designed for outdoor installations. It is the customer's responsibility to follow local country regulations, including operation within legal frequency channels, output power, and Dynamic Frequency Selection (DFS) requirements.

• Panel Layout

Pharos CPE:

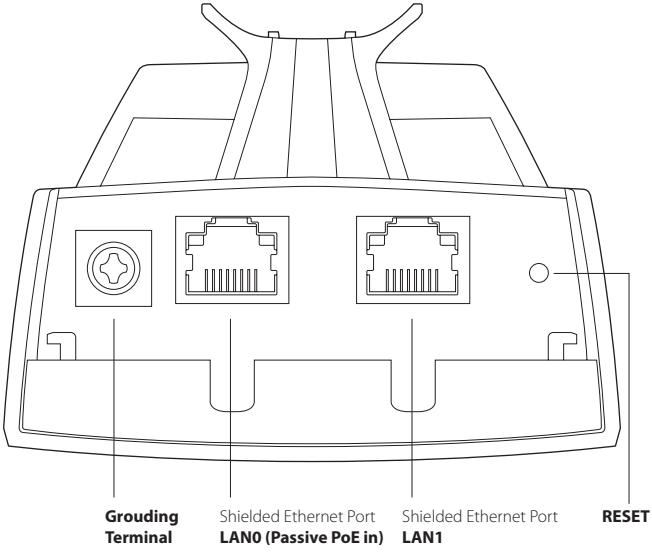

Passive PoE Adapter:

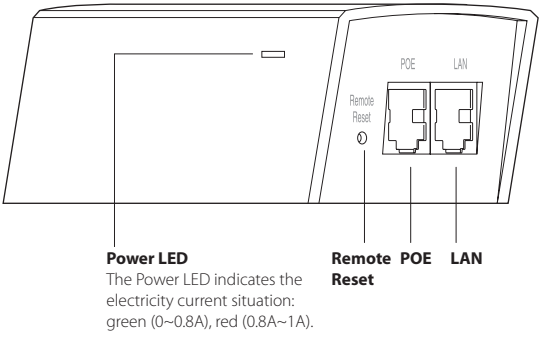

Hardware Connection

1. Site Consideration

• Mounting Height

Ensure a clear line of sight between the wireless devices for an optimum performance. An elevated location is recommended as obstacles like trees, buildings and large steel structures will weaken the wireless signal.
See Q2 in FAQ for details about how to calculate the minimum mounting height of the devices.

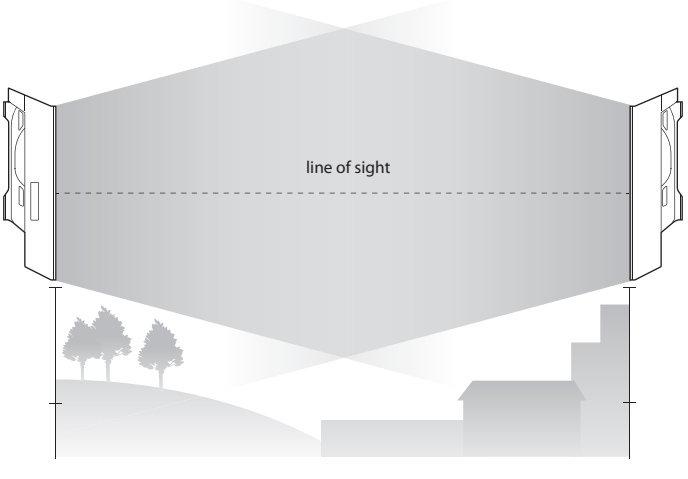

Side View

• Orientation

Install the CPE devices with their fronts facing the signal receivers. You can orient the devices with the assistance of Google Map, GPS and some landmarks according to the horizontal beamwidth listed below.

Models	CPE210	CPE220	CPE510	CPE520
Horizontal Beamwidth	65°	45°	45°	50°

2. Ethernet Cable Preparation

1. Select the adequate type of Ethernet cable.
The shielded CAT5e cable with ground wire (refer to the figure below) is prior to the general shielded CAT5e cable during the whole cabling. The former can more effectively protect your devices against ESD attacks under brutal outdoor environment.

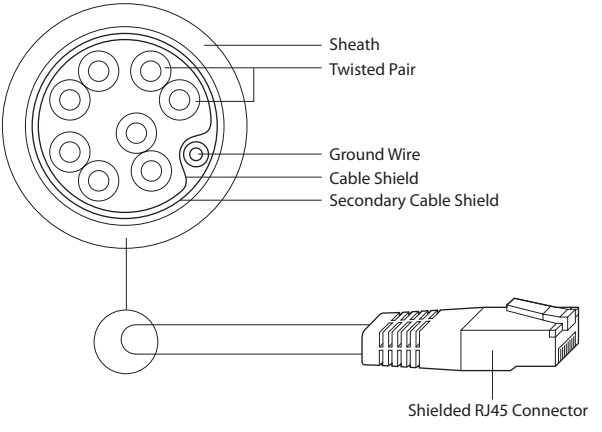

Shielded CAT5e Cable with Ground Wire

2. Review the routes of connecting the POE Adapter to the CPE and evaluate the Ethernet cable length for all the connections, then prepare adequate Ethernet cable.

3. Connection and Installation

Please connect and install the device as shown in the figure below. The product is suitable for indoor installation.

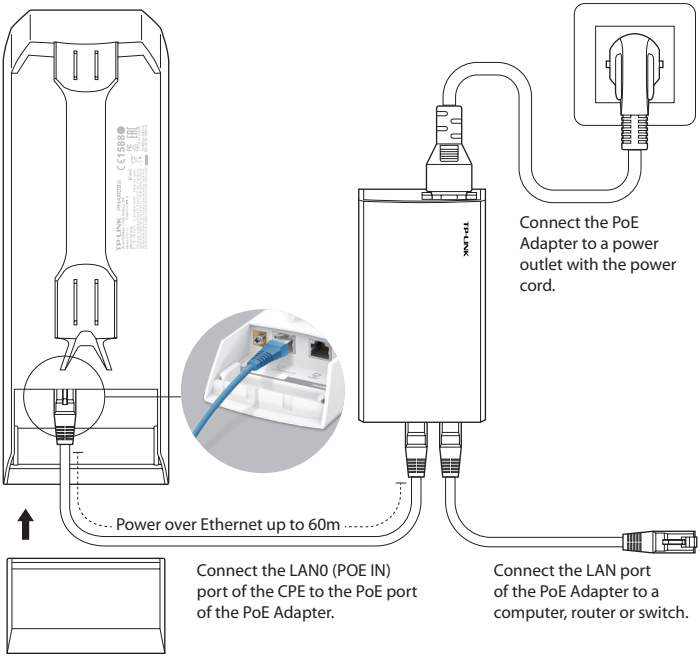

Slide to replace the cover of the CPE when all connections are finished.

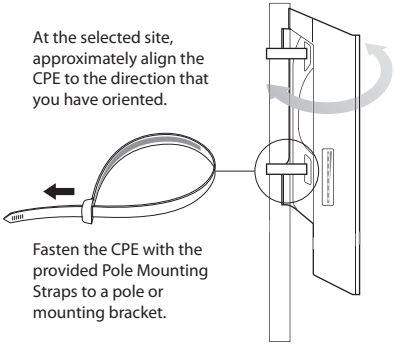

4. Lightning & ESD Protection

Proper grounding is extremely important for outdoor devices. Pharos CPEs provide two methods to protect the devices from damage of lightning and ESD attacks as shown in the figure below.

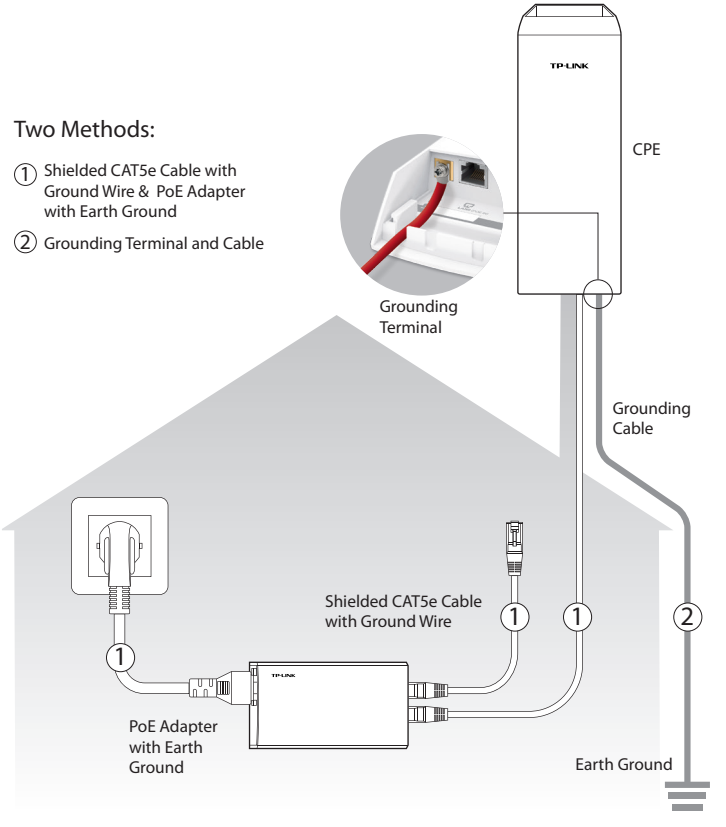

In most cases, adopting either of the two methods can be adequate, but adopting both of them can offer more effective protection.

Software Configuration

This chapter introduces the login to the Pharos Web Interface and the software configurations to implement Point-to-Point application.

1. Login to PharOS

1. Before accessing the PharOS Web Interface, you need to assign a static IP address 192.168.0.x (2≤x≤253) to your computer. We use 192.168.0.10 as an example in the figure below.

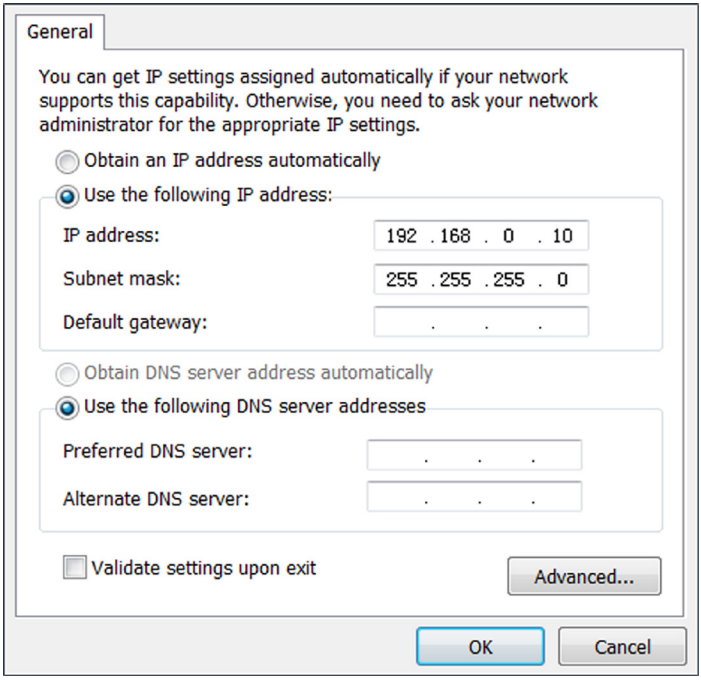

2. Open your web browser, type 'http://192.168.0.254' in the address field and press 'Enter'. It is recommended to use the latest version of Google Chrome, Safari or Firefox.

3. The 'Login' page will appear, set the parameters as below.

- Username: admin
- Password: admin
- Region: select according to your country/region
- Select 'I agree to these terms of use'
- Click 'Login'

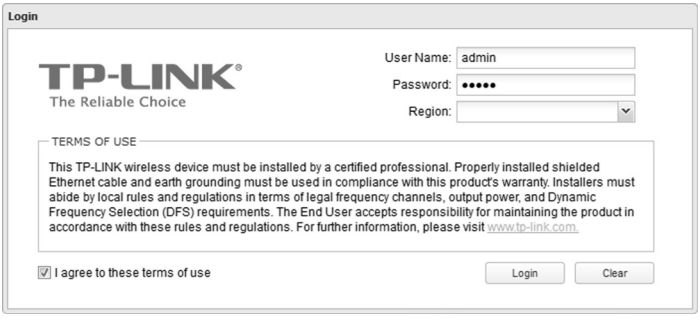

4. At the first login, change the 'Password' for safety.

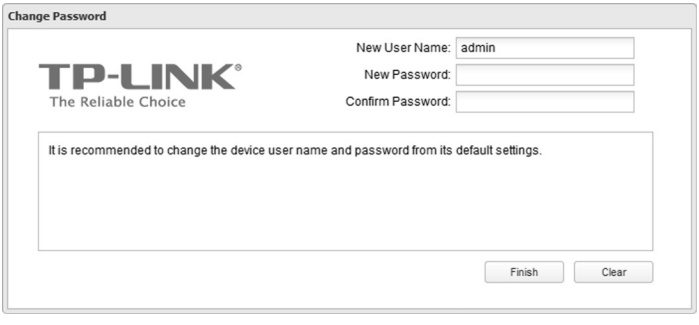

For subsequent logins, you only need to enter the username and password that you have set to log in.

5. Then you will log in to the PharOS Web Interface and see the Status page, shown as the figure below.

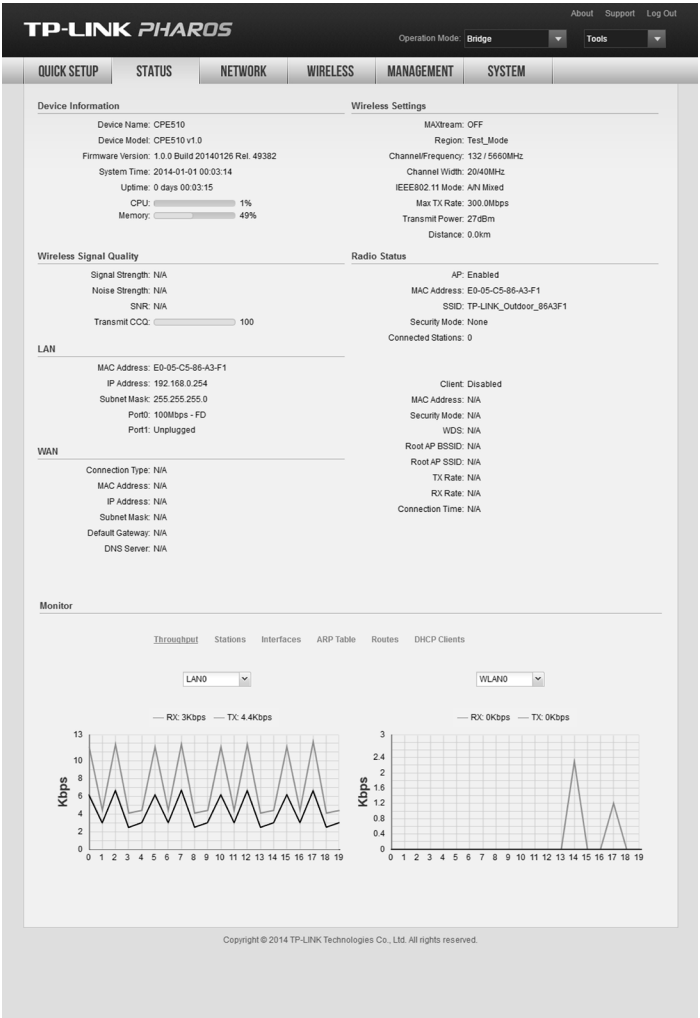

Antenna Alignment

In order to get the best performance, you can precisely align the direction of the CPE with the assistance of 'Wireless Signal Quality' on STATUS page of the Pharos Web Interface.

Adjust the direction of the CPE until the device reaches the highest SNR

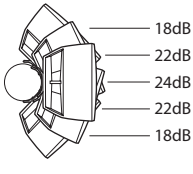

Specifications

HARDWARE FEATURES	
Dimensions	CPE520/CPE220: 275.83*79*60.3mm CPE510/CPE210: 224.34*79*60.3mm
Interface	LAN0: 10/100Mbps Ethernet Port(PoE IN) LAN1: 10/100Mbps Ethernet Port GND: Grounding Terminal for Lightning Protection RESET: Button to restore the device to Factory Default
Power Supply	24V Passive PoE Adapter Included
ESD Protection[1)]	15kV
Lightning Protection[1)]	6kV
Operating Temperature	-30℃ ~60℃ (-22℃ ~158℃)
Operating Humidity	5% ~ 95 %
Certification	CE, FCC, RoHS, IPX5

WIRELESS FEATURES				
Models	CPE210	CPE220	CPE510	CPE520
Antenna Gain	9dBi	12dBi	13dBi	16dBi
Horizontal Beamwidth/ Elevation Beamwidth[2)]	65°/ 45°	45°/ 30°	45°/ 33°	50°/ 20°
Maximum Transmit Power[3)]	27dBm	30dBma	27dBm	30dBm
Operating Frequency	2.4-2.4835GHz	2.4-2.4835GHz	5.15-5.85GHz	5.15-5.85GHz
802.11 Standards	11b/g/n	11b/g/n	11a/n	11a/n

Note

1) Estimation is based on copper grounding cable and shielded CAT5e cable with ESD drain wire.
2) Beamwidth values may vary throughout operating frequency.
3) Maximum transmit power and operating frequency may vary in different countries or regions.

Frequently Asked Questions (FAQ)

Q1. How to restore the CPE to its factory default settings?

With the CPE powered on, press and hold the 'RESET' button of the CPE or the 'Remote Reset' button of the Passive PoE Adapter for about 8 seconds until the Wireless Signal Strength LEDs flash.

Pharos CPE:

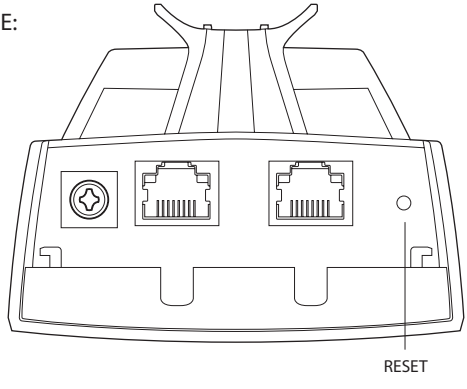

Passive PoE Adapter:

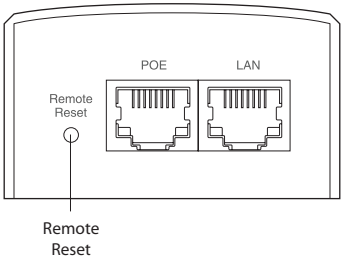

Q2. How to calculate the minimum mounting height of the devices?

In order to maximize the received signal strength of the devices, installers need to minimize the effect of the out-of-phase signals, which is caused by obstacles in the path between the transmitter and the receiver. Fresnel Zone is a usual method to calculate this path, as shown in the formula and the figure below.

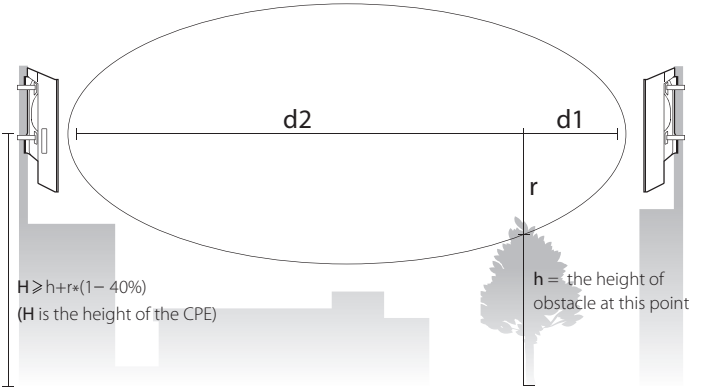

$$r = \sqrt{\frac{d_1 \times d_2}{d_1 + d_2} \cdot \frac{c}{f}}$$

where,
r = Fresnel zone radius in meters
c = 3×10^8 m/s, speed of light
f = operating frequency of the devices in Hz
d1 & d2 = the distances between the point and the devices in meters

For example, assume d1 is 2km, d2 is 8km, and f is 2.4GHz, then r would be 14.142m. Considering a toleration of 40%, allowable radius would be 8.485m. Assume h is 10m, then the result of the minimum mounting height based on this point would be 18.485m. Similarly, calculate the results based on all the points where there are obstacles, and the maximum value would be the final result.

For more information, please refer to
http://en.wikipedia.org/wiki/Fresnel_zone

Q3. How can I use Spectrum Analysis to find the appropriate channel for the devices?

1. Log in to PharOS, on the 'WIRELESS' page, you can find the 'Spectrum Analysis' button as shown in the figure below. Click the button.

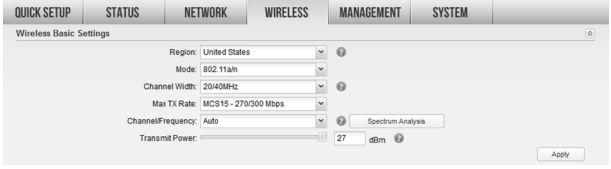

2. The following window will pop up. Click 'Yes' and you will then get into the Spectrum Analysis page.

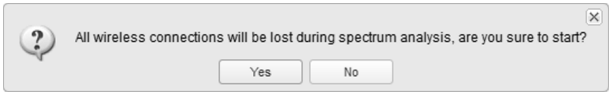

3. Select the 'Frequency Range' and click the 'Start' button, the PharOS will begin to analyze the power of the frequency. Watch the curves for a period of time, and then click 'Stop'. Mark the relatively low and continuous part of the average curve, and note the corresponding frequency range.
Here we take the figure below as an example.

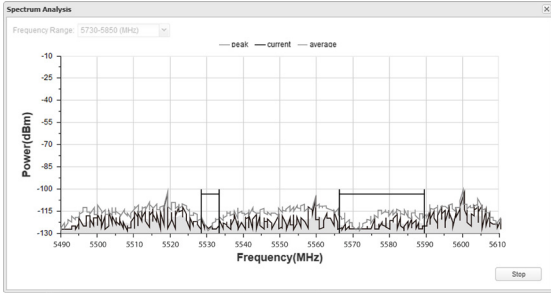

4. Close the Spectrum Analysis Window, and then you will get back to the Wireless page. For the Channel/Frequency option, it is recommended to select a value whose frequency is within the noted frequency range.
So, in this example, the recommended Channel/Frequency is 116/5580MHz.

FCC STATEMENT

This equipment has been tested and found to comply with the limits for a Class A digital device, pursuant to part 15 of the FCC Rules. These limits are designed to provide reasonable protection against harmful interference when the equipment is operated in a commercial environment. This equipment generates, uses, and can radiate radio frequency energy and, if not installed and used in accordance with the instruction manual, may cause harmful interference to radio communications. Operation of this equipment in a residential area is likely to cause harmful interference in which case the user will be required to correct the interference at his own expense.

This device complies with part 15 of the FCC Rules. Operation is subject to the following two conditions:

1. This device may not cause harmful interference.
2. This device must accept any interference received, including interference that may cause undesired operation.

Any changes or modifications not expressly approved by the party responsible for compliance could void the user's authority to operate the equipment.

FCC RF Radiation Exposure Statement:

This equipment complies with FCC RF radiation exposure limits set forth for an uncontrolled environment. This device and its antenna must not be co-located or operating in conjunction with any other antenna or transmitter. To comply with FCC RF exposure compliance requirements, this grant is applicable to only Mobile Configurations. The antennas used for this transmitter must be installed to provide a separation distance of at least 30 cm from all persons and must not be co-located or operating in conjunction with any other antenna or transmitter."

CE Mark Warning

CE1588

This is a class A product. In a domestic environment, this product may cause radio interference, in which case the user may be required to take adequate measures.

IC STATEMENT

This is a class A product. In a domestic environment, this product may cause radio interference, in which case the user may be required to take adequate measures.

Продукт сертифіковано згідно с правилами системи УкрСЕПРО на відповідність вимогам нормативних документів та вимогам, що передбачені чинними законодавчими актами України.

EAC

Safety Information

- When product has power button, the power button is one of the way to shut off the product; When there is no power button, the only way to completely shut off power is to disconnect the product or the power adapter from the power source.
- Don't disassemble the product, or make repairs yourself. You run the risk of electric shock and voiding the limited warranty. If you need service, please contact us.
- Avoid water and wet locations.

注意！

依據 低功率電波輻射性電機管理辦法

第十二條 經型式認證合格之低功率射頻電機，非經許可，公司、商號或使用者均不得擅自變更頻率、加大功率或變更原設計之特性或功能。

第十四條 低功率射頻電機之使用不得影響飛航安全及干擾合法通行；經發現有干擾現象時，應立即停用 ,並改善至無干擾時方得繼續使用。前項合法通信 ,指依電信規定作業之無線電信。低功率射頻電機需忍受合法通信或工業、科學以及醫療用電波輻射性電機設備之干擾 。減少電磁波影響，請妥適使用。

於 5.25GHz 至 5.35GHz 區域內操作之無線設備的警告聲明
工作頻率 5.250~5.350GHz 該頻段限於室內使用。

安全諮詢及注意事項

●請使用原裝電源供應器或只能按照本產品注明的電源類型使用本產品。
●清潔本產品之前請先拔掉電源線。請勿使用液體、噴霧清潔劑或濕布進行清潔。
●注意防潮，請勿將水或其他液體潑灑到本產品上。
●插槽與開口供通風使用，以確保本產品的操作可靠並防止過熱，請勿堵塞或覆蓋開口。
●請勿將本產品置放於靠近熱源的地方。除非有正常的通風，否則不可放在密閉位置中。
●請不要私自打開機殼，不要嘗試自行維修本產品，請由授權的專業人士進行此項工作。
此為甲類資訊技術設備，于居住環境中使用時，可能會造成射頻擾動，在此種情況下，使用者會被要求採取某些適當的對策。

This product can be used in the following countries:

AT / BG / BY / CA / CZ / DE / DK / EE / ES / FI / FR / GB / GR / HU / IE / IT
LT / LV / MT / NL / NO / PL / PT / RO / RU / SE / SK / TR / UA

COPYRIGHT & TRADEMARKS

Specifications are subject to change without notice.
TP-LINK The Reliable Choice is a registered trademark of TP-LINK TECHNOLOGIES CO., LTD. Other brands and product names are trademarks or registered trademarks of their respective holders. No part of the specifications may be reproduced in any form or by any means or used to make any derivative such as translation, transformation, or adaptation without permission from TP-LINK TECHNOLOGIES CO., LTD. Copyright © 2014 TP-LINK TECHNOLOGIES CO., LTD. All rights reserved.

Website: http://www.tp-link.com
Tel: +86 755 26504400
E-mail: support@tp-link.com
7106504648 REV1.0.0