TP-LINK®

Installation Guide

Wireless N Gigabit Access Point

EAP120 / EAP220

CONTENTS

Network Topology Requirements ——— 01

Overview ——— 02

Hardware Installation ——— 04

1. Installation Requirements 04
2. Mounting Bracket 04
3. Installation 05
4. Powering Mode 09

Getting Started with EAP ——— 11

Q&A ——— 14

Specifications ——— 15

Technical Support ——— 16

About This Installation Guide

This guide is designed to familiarize you with the general layout of the EAP, describe how to perform the hardware installation for EAP Series, and how to configure the EAP in your network. Your EAP has more features and functionalities which can be found in the User Guide.

Conventions

The EAP or the device mentioned in this guide stands for Wireless N Gigabit Access Point EAP120 and EAP220.

Network Topology Requirements

A typical network topology for the EAP is shown below.

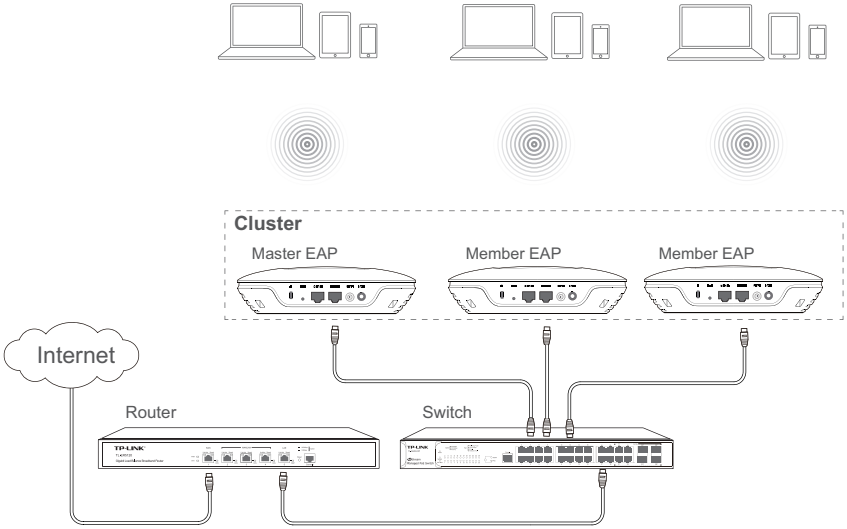

The EAP120 and EAP220 provide two management modes: Cluster and Standalone. By default, the management mode is Cluster. In this mode, all EAPs in the same LAN will form a cluster, and a Master EAP will be elected among them to manage other EAPs, called Member EAPs.

A DHCP server is required in the local network to assign IP addresses to the EAPs. A router usually acts as the DHCP server.

Typically, a Power over Ethernet (PoE) switch can be used to provide power to each EAP; otherwise power adapter must be used.

Hardware Overview

■ LED

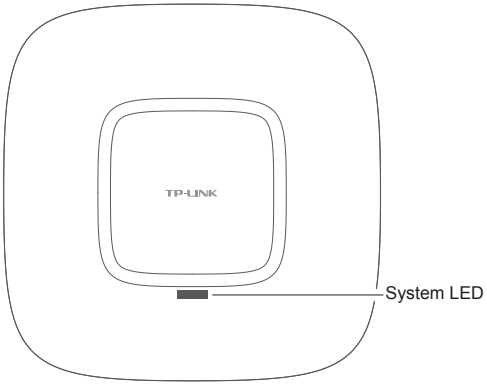

LED Status	Indication
Flashing green	System initialization is complete.
Solid green	The device is working properly.
Flashing red	System errors. RAM, Flash, Ethernet, WLAN or firmware may be malfunctioning.
Flashing yellow	Firmware update is in progress. Do not disconnect or power off the device.
Alternating red/green/yellow twice	The device is being reset.

■ Interface Panel

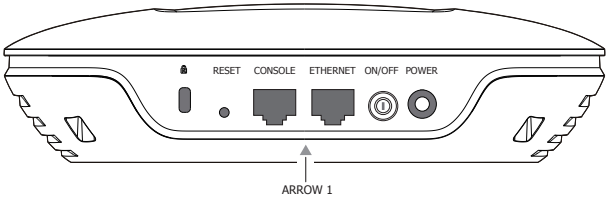

The interface panel components of the EAP, from left to right, are described in the following list:

Kensington Security Slot

Secure the lock (not provided) into the security slot to prevent the device from being stolen.

RESET

With the device powered on, press and hold the RESET button for about 8 seconds until the LED flashes Red/Green/Yellow alternatively twice, then release the button. The device will restore to factory default settings.

CONSOLE

This port is used to connect to the serial port of a computer or a terminal to check and monitor system information of the device.

ETHERNET

This port is used to connect to a router to transmit data or to a PSE device, such as a switch, for both data transmission and Power over Ethernet (PoE) through Ethernet cabling.

ON/OFF

Press this button to turn on/off the device.

POWER

The power port is used connect the device to an electrical wall outlet via power adapter. Please only use the provided power adapter. Refer to **Powering Mode** to learn how to power the device via PoE or power adapter.

ARROW 1

This arrow is used to align with ARROW 2 on the mounting bracket to lock the EAP into place. Please refer to **Mounting Bracket** to locate ARROW 2.

Hardware Installation

The EAP can be wall or ceiling-mounted and can be powered via a PSE device or the provided power adapter. Please suitably arrange your wire layout before mounting the EAP.

1. Installation Requirements

Before installation, check the package contents for the following items:

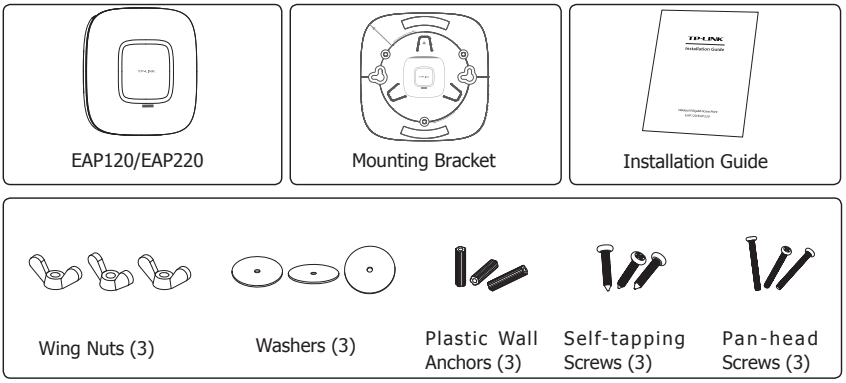

Other installation equipments may require, including a pencil, ruler, drill, drill bit, hammer, screwdriver and a ladder.

2. Mounting Bracket

The following figure describes the structure of the mounting bracket.

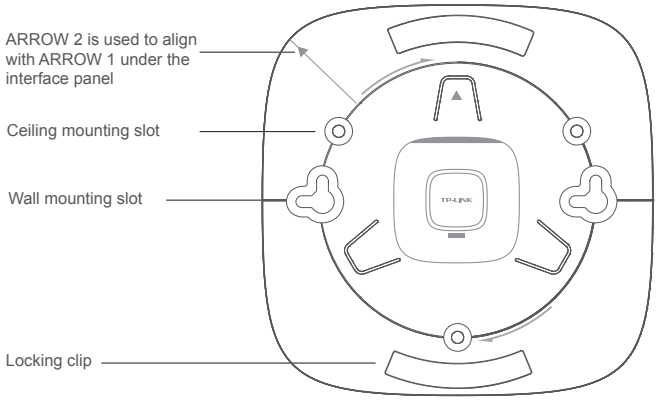

Mounting Bracket

3. Installation

■ Ceiling Mounting

Note:

- Make sure the thickness of the ceiling is less than 18mm and the ceiling can bear at least five kilograms.
- It is NOT recommended to mount the EAP on a low-strength material, such as gypsum ceiling panel. If no other choice is available, make sure you add a piece of strong material under the wing nuts to ensure the EAP is mounted solidly.

1. Remove the ceiling tile.

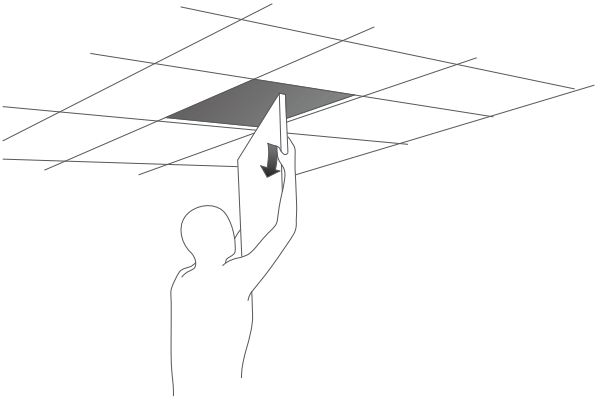

2. Place the mounting bracket in the center of the ceiling tile. Mark the positions of the three mounting slots and a hole for the Ethernet cable to feed through.

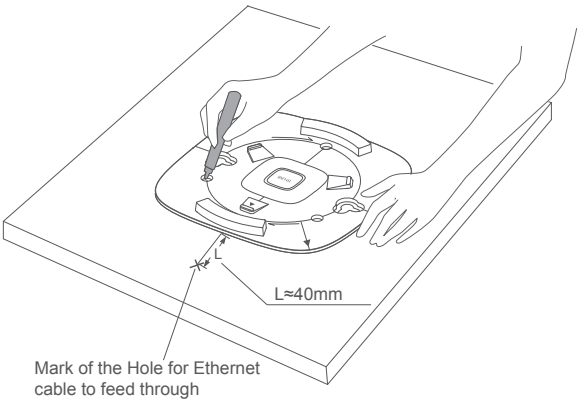

3. Use a drill with the appropriate size drill bit to drill three 4mm holes for the pan-head screws, and drill a 10mm hole for the Ethernet cable to feed through.

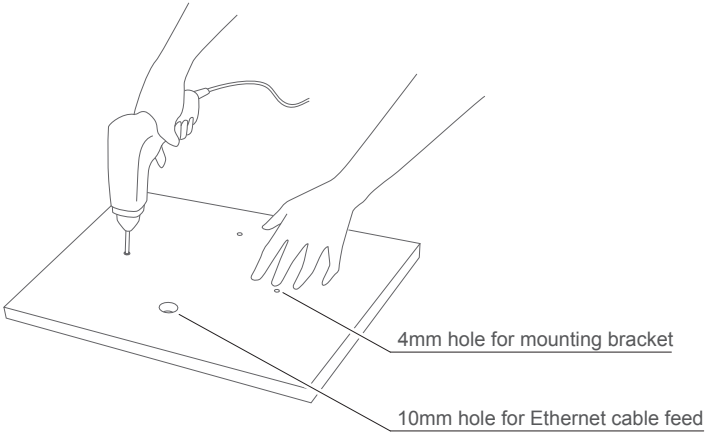

4. Secure the mounting bracket to the ceiling tile using the pan-head screws (3), washers (3) and wing nuts (3), as shown below.

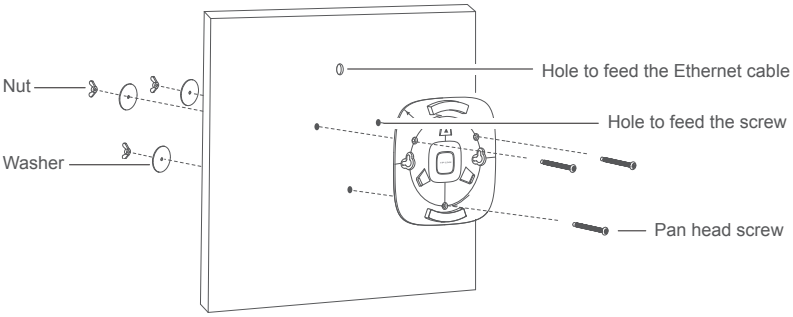

5. Place the EAP into the mounting bracket by aligning ARROW 1 with ARROW 2, as shown below.

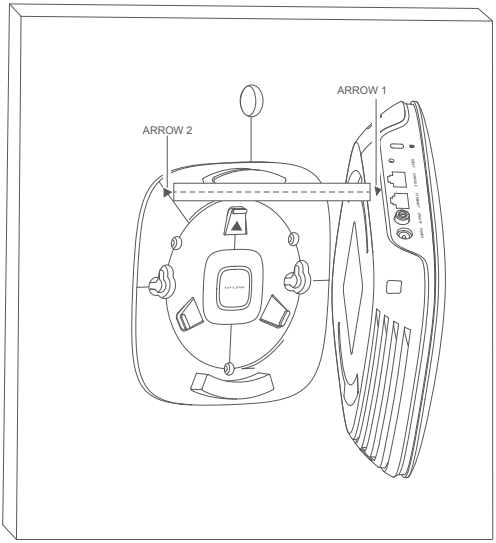

6. Turn the EAP clockwise until it locks into place.

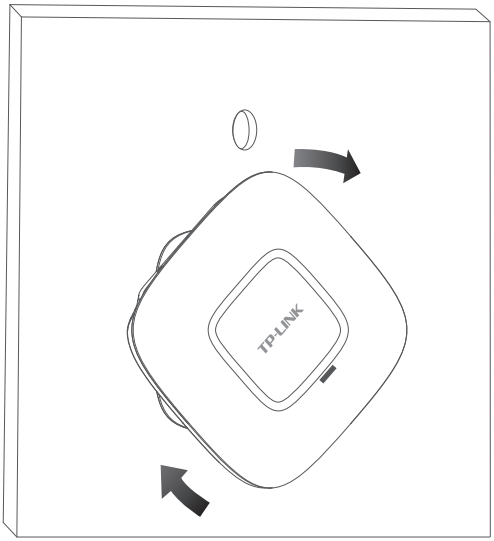

7. Feed the Ethernet cable through the hole and set the ceiling tile back into place.

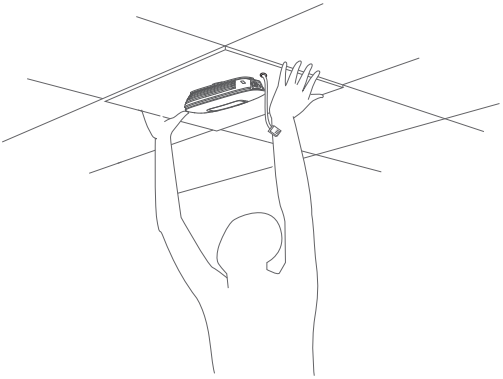

8. Connect the Ethernet cable to the Ethernet port.

■ Wall Mounting

There are two wall-mounting slots on the back of the mounting bracket. To mount the EAP on a wall, please follow the steps below.

1. Make two small pencil marks on the wall. The distance between the two marks should be 98.6mm.

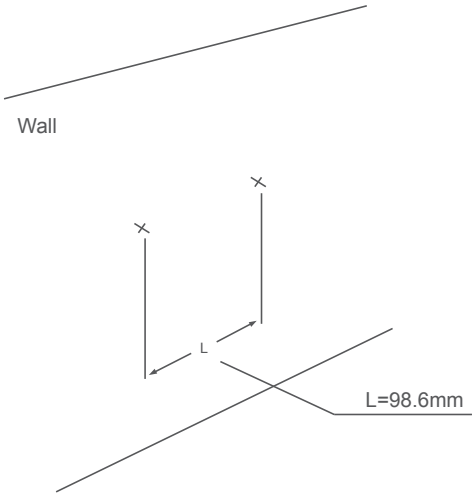

2. Use a drill with the appropriate size drill bit to drill two 4mm holes through the center of your marks.

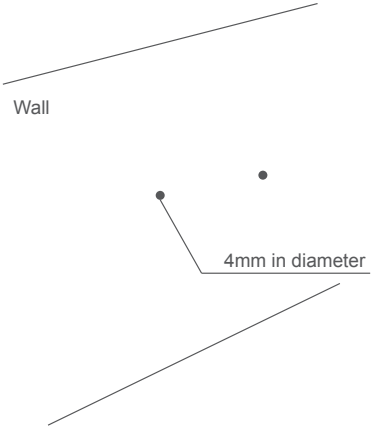

3. Insert the plastic wall anchors into the 4mm holes and secure the mounting bracket to the wall by driving the self-tapping screws into the anchors.
4. Place the EAP into the mounting bracket by aligning ARROW 1 with ARROW 2, and turn the EAP clockwise to lock it into place.

4. Powering Mode

The EAP can be powered via a PSE device (e.g., a PoE switch) or its power adapter.

■ Via PSE Device

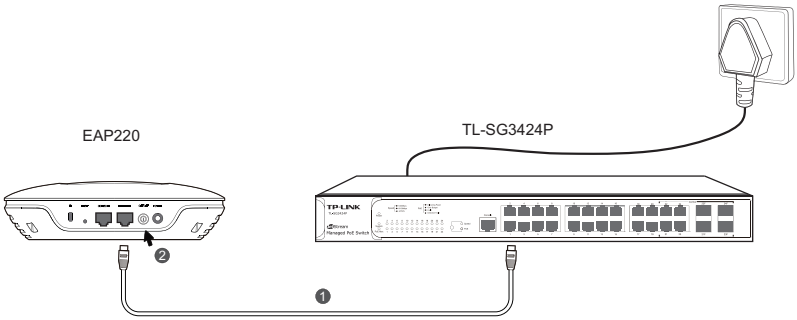

1. Connect the EAP and the PSE device through an Ethernet cable.
2. Press the ON/OFF button on the interface panel of the EAP.

■ Via Power Adapter

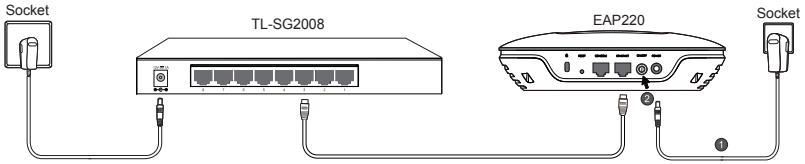

1. Plug one end of the provided power adapter into the power port of the EAP, and the other end to a standard electrical wall socket.

2. Press the ON/OFF button on the interface panel of the EAP.

Getting Started with EAP

The following content will guide you to quickly set up a wireless network connection with several EAPs, and login to the management page to configure the EAPs. The management host can connect to the Master EAP wirelessly or with wires. Wireless Login is conveniently recommended.

Option 1: Wireless Login

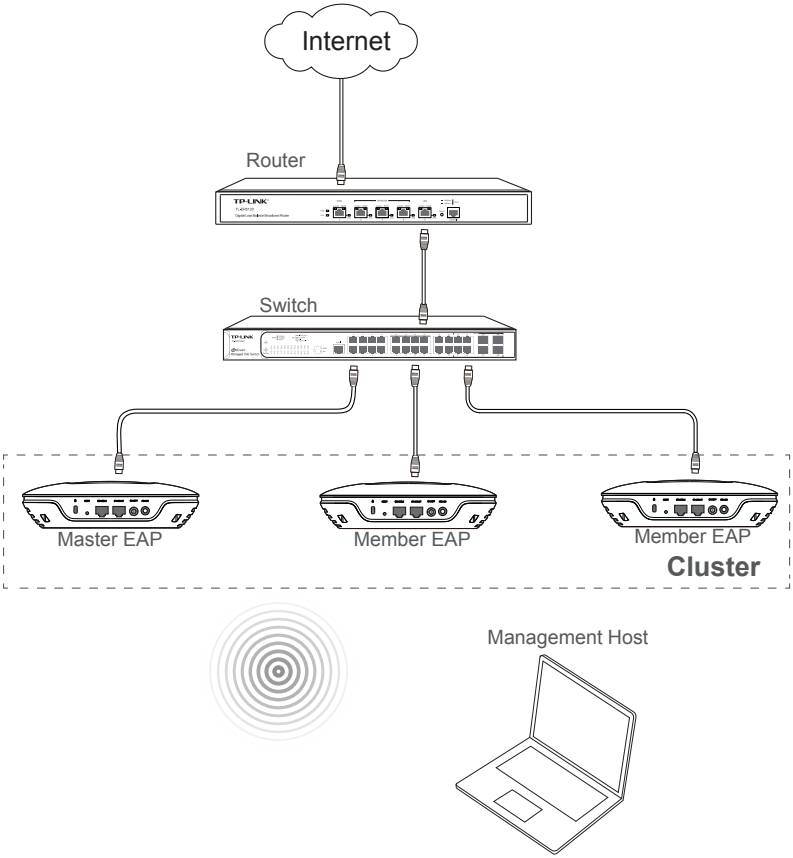

Step 1: Power on

Power on the EAPs. The EAP that first completes system initialization will be selected as the Master EAP.

Step 2: Wireless Access

1. Make sure the management host is set to **obtain an IP address automatically**.
2. Join the wireless network using the default SSID TP-LINK_2.4GHz_XXXXXX or TP-LINK_5GHz_XXXXXX, where XXXXXX represents the last 6 characters of the EAP's MAC address. Password is not required.

Step 3: Quick Setup

1. Open a web browser and type in **http://tplinkeap.net** to access the EAP's web management page. Use **admin** (all lowercase) for both username and password to login. Please note that in Cluster mode, the login will be directed to the Master EAP.
2. Create a new user name and password.
3. Follow the step-by-step instructions to complete the Quick Setup. Any configurations you make to the Master EAP will automatically synchronize to all the other EAPs.

Congratulations! Now you can enjoy the wireless network.

If you changed the default SSID and password, you need to reconnect to the EAP using the new SSID and password to perform more configurations.

Option 2: Wired Login

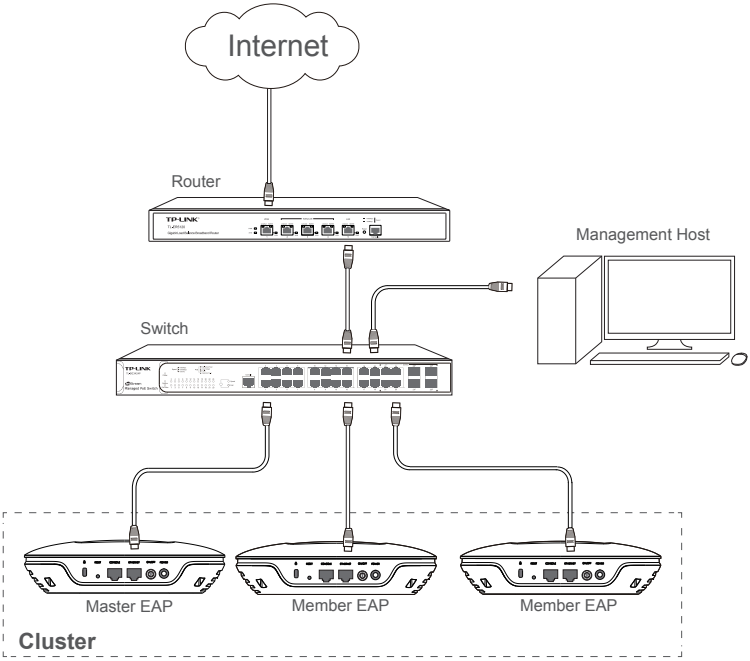

Step 1: Power on

Power on the EAPs. The EAP that first completes system initialization will be selected as the Master EAP.

Step 2: Wired Access

1. Make sure the management host is set to **obtain an IP address automatically**.
2. Access your DHCP server and locate the IP address of the EAPs.

Step 3: Quick Setup

1. Open a web browser and type in the IP address of the Master EAP to login to the web server. The default user name and password are **admin** (all lowercase). In the Cluster mode, the login will be directed to the Master EAP.
2. Create a new user name and password.
3. Follow the step-by-step instructions to complete Quick Setup. Any configurations you make to the Master EAP will automatically synchronize to all the other EAPs.

Congratulations! Now you can enjoy the wireless network.

Q&A

Q1. Can Master EAP work as an access point?

Yes. In addition to managing and monitoring Member EAPs, the Master EAP is equipped with features and functions of an AP, providing wireless access to clients.

Q2. What is the maximum number of EAPs in a Cluster?

The maximum number of EAPs in a cluster is 24.

Q3. Can EAP120 be in the same Cluster with EAP220?

No, EAP120 and EAP220 cannot be in the same cluster. Only the EAPs of the same model can be clustered together.

Specifications

Models	EAP120	EAP220
HARDWARE FEATURES		
Interface	10/100/1000Mbps Ethernet port (RJ-45) Console port (RJ-45) Power connector (DC-2) Kensington lock slot	
Buttons	RESET ON/OFF (for power supply)	
PoE Compatible	802.3af	
Power Supply	PoE (36~57VDC, 0.2A Max) or External 12VDC/1A Power Supply	PoE (36-57VDC, 0.4A Max) or External 12VDC/1.5A Power Supply
Maximum Power Consumption	4.4W	9.6W
Antenna	2*4dBi Embedded	4*4dBi Embedded
Mounting	Ceiling/Wall mounting (Kits included)	
Certification	CE FCC RoHS	
Operating Temperature	0℃~40℃ (32℉~104℉)	
Operating Humidity	10%~90% non-condensing	
WIRELESS FEATURES		
Wireless Frequency	2.4GHz	2.4GHz & 5GHz
Wi-Fi Standard	IEEE 802.11b/g/n	IEEE 802.11a/b/g/n
Maximum Data Rate	Up to 300Mbps	Up to 600Mbps
Max RF Transmission Power(1)	23dBm	2.4GHz:23dBm 5GHz:20dBm
Multiple SSIDs	Up to eight per radio	
Captive Portal Authentication	Support	
Wireless Security	WEP WPA/WPA2-personal WPA/WPA2-enterprise	
Cluster	Support, up to 24 APs in a cluster	

Maximum transmission power may vary in different countries or regions.

Technical Support

- For more help, please go to: http://www.tp-link.com/en/support/faq
- To download the latest firmware, driver, utility and user guide, please go to: http://www.tp-link.com/en/support/download
- For all other technical support, please contact us using the information below:

Global	Tel: +86 755 2650 4400 Fee: Depending on rate of different carriers, IDD. E-mail: support@tp-link.com Service time: 24hrs, 7 days a week
Australia/New Zealand	Tel: AU 1300 87 5465 (Depending on 1300 policy.) NZ 0800 87 5465 (Toll Free) E-mail: support.au@tp-link.com (Australia) support.nz@tp-link.com (New Zealand) Service time: 24hrs, 7 days a week
Brazil	Toll Free: 0800 608 9799 (Portuguese Service) E-mail: suporte.br@tp-link.com Service time: Monday to Saturday, 09:00 to 20:00; Saturday, 09:00 to 15:00
France	Tel: 0820 800 860 (French service) Fee: 0.118 EUR/min from France Email: support.fr@tp-link.com Service time: Monday to Friday 9:00 to 18:00 *Except French Bank holidays
Germany/Austria	Tel: +49 1805 875 465 (German Service) +49 1805 TPLINK +49 820 820 360 Fee: Landline from Germany: 0.14EUR/min. Landline from Austria: 0.20EUR/min. E-mail: support.de@tp-link.com Service time: Monday to Friday, 9:00 to 12:30 and 13:30 to 17:30. GMT+ 1 or GMT+ 2 (DST in Germany) *Except bank holidays in Hesse
Indonesia	Tel: (+62) 021 6386 1936 Fee: Depending on rate of different carriers. E-mail: support.id@tp-link.com Service time: Monday to Friday 9:00 to 18:00 *Except public holidays
Italy	Tel: +39 023 051 9020 Fee: Depending on rate of different carriers. E-mail: support.it@tp-link.com Service time: Monday to Friday, 9:00 to13:00 and 14:00 to 18:00
Malaysia	Toll Free: 1300 88 875 465 Email: support.my@tp-link.com Service time: 24hrs, 7 days a week
Poland	Tel: +48 (0) 801 080 618 +48 223 606 363 (if calls from mobile phone) Fee: Depending on rate of different carriers. E-mail: support.pl@tp-link.com Service time: Monday to Friday 9:00 to 17:00. GMT+1 or GMT+2 (DST)

Russian Federation	Tel: 8 (499) 754 5560 (Moscow NO.) 8 (800) 250 5560 (Toll-free within RF) E-mail: support.ru@tp-link.com Service time: From 09:00 to 21:00 (Moscow time) *Except weekends and holidays in RF
Singapore	Tel: +65 6284 0493 Fee: Depending on rate of different carriers. E-mail: support.sg@tp-link.com Service time: 24hrs, 7 days a week
Switzerland	Tel: +41 (0) 848 800 998 (German Service) Fee: 4-8 Rp/min, depending on rate of different time. E-mail: support.ch@tp-link.com Service time: Monday to Friday, 9:00 to 12:30 and 13:30 to 17:30. GMT+ 1 or GMT+ 2 (DST)
Turkey	Tel: 0850 7244 488 (Turkish Service) Fee: Depending on rate of different carriers. E-mail: support.tr@tp-link.com Service time: 9:00 to 21:00, 7 days a week
UK	Tel: +44 (0) 845 147 0017 Fee: Landline: 1p-10.5p/min, depending on the time of day. Mobile: 15p-40p/min, depending on your mobile network. E-mail: support.uk@tp-link.com Service time: 24hrs, 7 days a week
Ukraine	Tel: 0800 505 508 Fee: Free for Landline; Mobile: Depending on rate of different carriers. E-mail: support.ua@tp-link.com Service time: Monday to Friday 10:00 to 22:00
USA/Canada	Toll Free: +1 866 225 8139 E-mail: support.usa@tp-link.com Service time: 24hrs, 7 days a week

FCC STATEMENT

This equipment has been tested and found to comply with the limits for a Class A digital device, pursuant to part 15 of the FCC Rules. These limits are designed to provide reasonable protection against harmful interference when the equipment is operated in a commercial environment. This equipment generates, uses, and can radiate radio frequency energy and, if not installed and used in accordance with the instruction manual, may cause harmful interference to radio communications. Operation of this equipment in a residential area is likely to cause harmful interference in which case the user will be required to correct the interference at his own expense.

This device complies with part 15 of the FCC Rules. Operation is subject to the following two conditions:

1) This device may not cause harmful interference.
2) This device must accept any interference received, including interference that may cause undesired operation.

Any changes or modifications not expressly approved by the party responsible for compliance could void the user's authority to operate the equipment.

This equipment complies with FCC RF radiation exposure limts set forth for an uncontrolled environment. This device and its antenna must not be co-located or operating in conjunction with any other antenna or transmitter. To comply with FCC RF exposure compliance requirements,this grant is applicable to only Moblie Configurations.The antenna used for this tranmitter must be installed to provide a separation distance of at least 20 cm from all persons and must not be co-located or operating in conjunction with any other antenna or transmitter.

CE Mark Warning

CE1588 (EAP220) or CE1588 (EAP120)

This is a class A product. In a domestic environment, this product may cause radio interference, in which case the user may be required to take adequate measures.

IC Statement

This Class A digital apparatus complies with Canadian ICES-003.

Cet appareil numérique de la classe A est conforme à la norme NMB-003 du Canada.

Продукт сертифіковано згідно с правилами системи УкрСЕПРО на відповідність вимогам нормативних документів та вимогам, що передбачені чинними законодавчими актами України.

EAC

Safety Information

1) When the product has a power button, the power button is one of the way to shut off the product. When there is no power button, the only way to completely shut off the power is to disconnect the product or the power adapter from the power source.
2) Do not attempt to disassemble the product, or make repairs yourself. You run the risk of electric shock, and voiding the limited warranty. If you need service, please contact us.
3) Avoid water and wet locations.

NCC Notice & BSMI Notice

注意!

依據 低功率電波輻射性電機管理辦法

第十二條 經型式認證合格之低功率射頻電機，非經許可，公司、商號或使用者均不得擅自變更頻率、加大功率或變更原設計之特性或功能。

第十四條 低功率射頻電機之使用不得影響飛航安全及干擾合法通行；經發現有干擾現象時，應立即停用，並改善至無干擾時方得繼續使用。前項合法通信，指依電信規定作業之無線電信。低功率射頻電機需忍受合法通信或工業、科學以及醫療用電波輻射性電機設備之干擾。

減少電磁波影響，請妥適使用。

安全諮詢及注意事項

●請使用原裝電源供應器或只能按照本產品注明的電源類型使用本產品。

●清潔本產品之前請先拔掉電源線。請勿使用液體、噴霧清潔劑或濕布進行清潔。

●注意防潮，請勿將水或其他液體潑灑到本產品上。

●插槽與開口供通風使用，以確保本產品的操作可靠並防止過熱，請勿堵塞或覆蓋開口。

●請勿將本產品置放於靠近熱源的地方。除非有正常的通風，否則不可放在密閉位置中。

●請不要私自打開機殼，不要嘗試自行維修本產品，請由授權的專業人士進行此項工作。

此為甲類資訊技術設備，于居住環境中使用時，可能會造成射頻擾動，在此種情況下，使用者會被要求採取某些適當的對策。

This product can be used in the following countries:

AT / BG / BY / CA / CZ / DE / DK / EE / ES / FI / FR / GB / GR / HU / IE / IT

LT / LV / MT / NL / NO / PL / PT / RO / RU / SE / SK / TR / UA / US

COPYRIGHT & TRADEMARKS

Specifications are subject to change without notice. TP-LINK® is a registered trademark of TP-LINK TECHNOLOGIES CO., LTD. Other brands and product names are trademarks of their respective holders. No part of the specifications may be reproduced in any form or by any means or used to make any derivative such as translation, transformation, or adaptation without permission from TP-LINK TECHNOLOGIES CO., LTD. Copyright © 2014 TP-LINK TECHNOLOGIES CO., LTD. All rights reserved.

Website: http://www.tp-link.com

Tel: +86 755 26504400

E-mail: support@tp-link.com

7106505003 REV1.0.2