FCC SAR Test Report

APPLICANT	:	TP-LINK TECHNOLOGIES CO., LTD.
EQUIPMENT	:	AC1200 High Gain Wireless Dual Band USB Adapter
BRAND NAME	:	TP-LINK
MODEL NAME	:	T4UH
FCC ID	:	TE7T4UH
STANDARD	:	FCC 47 CFR Part 2 (2.1093) ANSI/IEEE C95.1-1992 IEEE 1528-2003

We, SPORTON INTERNATIONAL INC., would like to declare that the tested sample has been evaluated in accordance with the procedures and had been in compliance with the applicable technical standards.

The test results in this report apply exclusively to the tested model / sample. Without written approval of SPORTON INTERNATIONAL INC., the test report shall not be reproduced except in full.

Reviewed by: Eric Huang / Deputy Manager

Approved by: Jones Tsai / Manager

Testing Laboratory
1190

SPORTON INTERNATIONAL INC.
No. 52, Hwa Ya 1st Rd., Hwa Ya Technology Park, Kwei-Shan Hsiang, Tao Yuan Hsien, Taiwan, R.O.C.

Table of Contents

1. Statement of Compliance **4**
2. Administration Data **4**
3. Guidance Standard **5**
4. Equipment Under Test (EUT) **5**
4.1 General Information 5
4.2 Maximum Tune-up Limit 6
5. RF Exposure Limits **7**
5.1 Uncontrolled Environment 7
5.2 Controlled Environment 7
6. Specific Absorption Rate (SAR) **8**
6.1 Introduction 8
6.2 SAR Definition 8
7. System Description and Setup **9**
8. Measurement Procedures **10**
8.1 Spatial Peak SAR Evaluation 10
8.2 Power Reference Measurement 11
8.3 Area Scan 11
8.4 Zoom Scan 12
8.5 Volume Scan Procedures 12
8.6 Power Drift Monitoring 12
9. Test Equipment List **13**
10. System Verification **14**
10.1 Tissue Verification 14
10.2 System Performance Check Results 15
11. RF Exposure Positions **16**
11.1 Wireless Router 16
12. Conducted RF Output Power (Unit: dBm) **17**
13. Antenna Location **24**
14. SAR Test Results **25**
14.1 Body SAR 25
14.2 Repeated SAR Measurement 27
15. Uncertainty Assessment **28**
16. References **31**
Appendix A. Plots of System Performance Check
Appendix B. Plots of High SAR Measurement
Appendix C. DASY Calibration Certificate
Appendix D. Test Setup Photos

Revision History

REPORT NO.	VERSION	DESCRIPTION	ISSUED DATE
FA470201	Rev. 01	Initial issue of report	Oct. 20, 2014
FA470201	Rev. 02	Remove 5600MHz ~ 5650MHz conducted power and SAR result of the report.	Nov. 04, 2014

1. Statement of Compliance

The maximum results of Specific Absorption Rate (SAR) found during testing for **TP-LINK TECHNOLOGIES CO., LTD., AC1200 High Gain Wireless Dual Band USB Adapter, T4UH**, are as follows.

Equipment Class	Frequency Band	Highest SAR Summary Body 1g SAR (W/kg)
DTS	WLAN 2.4GHz Band	**1.41**
	WLAN 5.8GHz Band	0.65
NII	WLAN 5.2GHz Band	0.73
	WLAN 5.3GHz Band	0.76
	WLAN 5.5GHz Band	0.84
Date of Testing:		09/25/2014~09/26/2014

This device is in compliance with Specific Absorption Rate (SAR) for general population/uncontrolled exposure limits (1.6 W/kg) specified in FCC 47 CFR part 2 (2.1093) and ANSI/IEEE C95.1-1992, and had been tested in accordance with the measurement methods and procedures specified in IEEE 1528-2003.

2. Administration Data

Testing Laboratory	
Test Site	SPORTON INTERNATIONAL INC.
Test Site Location	No. 52, Hwa Ya 1st Rd., Hwa Ya Technology Park, Kwei-Shan Hsiang, Tao Yuan Hsien, Taiwan, R.O.C. TEL: +886-3-327-3456 FAX: +886-3-328-4978

Applicant	
Company Name	TP-LINK TECHNOLOGIES CO., LTD.
Address	Building 24 (floors 1,3,4,5) and 28 (floors1-4) Central Science and Technology Park, Shennan Rd, Nanshan, Shenzhen, China

Manufacturer	
Company Name	TP-LINK TECHNOLOGIES CO., LTD.
Address	Building 24 (floors 1,3,4,5) and 28 (floors1-4) Central Science and Technology Park, Shennan Rd, Nanshan, Shenzhen, China

3. Guidance Standard

The Specific Absorption Rate (SAR) testing specification, method, and procedure for this device is in accordance with the following standards:

- FCC 47 CFR Part 2 (2.1093)
- ANSI/IEEE C95.1-1992
- IEEE 1528-2003
- FCC KDB 865664 D01 SAR Measurement 100 MHz to 6 GHz v01r03
- FCC KDB 865664 D02 SAR Reporting v01r01
- FCC KDB 447498 D01 General RF Exposure Guidance v05r02
- FCC KDB 248227 D01 SAR meas for 802 11abg v01r02

4. Equipment Under Test (EUT)

4.1 General Information

Product Feature & Specification	
Equipment Name	AC1200 High Gain Wireless Dual Band USB Adapter
Brand Name	TP-LINK
Model Name	T4UH
FCC ID	TE7T4UH
S / N	14-5
Wireless Technology and Frequency Range	WLAN 2.4GHz Band: 2412 MHz ~ 2462 MHz WLAN 5.2GHz Band: 5180 MHz ~ 5240 MHz WLAN 5.3GHz Band: 5260 MHz ~ 5320 MHz WLAN 5.5GHz Band: 5500 MHz ~ 5700 MHz WLAN 5.8GHz Band: 5745 MHz ~ 5805 MHz
Mode	・802.11a/b/g/n/ac HT20/HT40/VHT20/VHT40/VHT80
EUT Stage	Production Unit
Remark: 1. WLAN operation in 5600 MHz ~ 5650 MHz is notched	

4.2 Maximum Tune-up Limit

Band / Frequency (MHz)		IEEE 802.11 Average Power (dBm)					
		Ant 0				Ant 0+1	
		11b	11g	HT20	HT40	HT20	HT40
2.4GHz Band	2412	18	16	18		20.5	
	2422				18		20
	2437	18	18	18	18	20.5	20
	2452				18		20
	2462	18	15	18		20.5	

Band / Frequency (MHz)	IEEE 802.11 Average Power (dBm)										
	Ant 0						Ant 0+1				
	11a	HT20	HT40	VHT20	VHT40	VHT80	HT20	HT40	VHT20	VHT40	VHT80
5.2GHz Band	16	16	17	16	17	17	16	16	15	18	20
5.3GHz Band	18	17	17	17	17	17	20	20	20	20	20
5.5GHz Band	18	17	17	17	17	17	20	20	20	20	20
5.8GHz Band	18	18	18	18	17	17	20	20	20	20	20

5. RF Exposure Limits

5.1 Uncontrolled Environment

Uncontrolled Environments are defined as locations where there is the exposure of individuals who have no knowledge or control of their exposure. The general population/uncontrolled exposure limits are applicable to situations in which the general public may be exposed or in which persons who are exposed as a consequence of their employment may not be made fully aware of the potential for exposure or cannot exercise control over their exposure. Members of the general public would come under this category when exposure is not employment-related; for example, in the case of a wireless transmitter that exposes persons in its vicinity.

5.2 Controlled Environment

Controlled Environments are defined as locations where there is exposure that may be incurred by persons who are aware of the potential for exposure, (i.e. as a result of employment or occupation). In general, occupational/controlled exposure limits are applicable to situations in which persons are exposed as a consequence of their employment, who have been made fully aware of the potential for exposure and can exercise control over their exposure. The exposure category is also applicable when the exposure is of a transient nature due to incidental passage through a location where the exposure levels may be higher than the general population/uncontrolled limits, but the exposed person is fully aware of the potential for exposure and can exercise control over his or her exposure by leaving the area or by some other appropriate means.

Limits for Occupational/Controlled Exposure (W/kg)

Whole-Body	Partial-Body	Hands, Wrists, Feet and Ankles
0.4	8.0	20.0

Limits for General Population/Uncontrolled Exposure (W/kg)

Whole-Body	Partial-Body	Hands, Wrists, Feet and Ankles
0.08	1.6	4.0

1. Whole-Body SAR is averaged over the entire body, partial-body SAR is averaged over any 1gram of tissue defined as a tissue volume in the shape of a cube. SAR for hands, wrists, feet and ankles is averaged over any 10 grams of tissue defined as a tissue volume in the shape of a cube.

6. Specific Absorption Rate (SAR)

6.1 Introduction

SAR is related to the rate at which energy is absorbed per unit mass in an object exposed to a radio field. The SAR distribution in a biological body is complicated and is usually carried out by experimental techniques or numerical modeling. The standard recommends limits for two tiers of groups, occupational/controlled and general population/uncontrolled, based on a person's awareness and ability to exercise control over his or her exposure. In general, occupational/controlled exposure limits are higher than the limits for general population/uncontrolled.

6.2 SAR Definition

The SAR definition is the time derivative (rate) of the incremental energy (dW) absorbed by (dissipated in) an incremental mass (dm) contained in a volume element (dv) of a given density (ρ). The equation description is as below:

$$\mathbf{SAR} = \frac{\mathbf{d}}{\mathbf{dt}}\left(\frac{\mathbf{dW}}{\mathbf{dm}}\right) = \frac{\mathbf{d}}{\mathbf{dt}}\left(\frac{\mathbf{dW}}{\boldsymbol{\rho}\mathbf{dv}}\right)$$

SAR is expressed in units of Watts per kilogram (W/kg)

$$\mathbf{SAR} = \frac{\boldsymbol{\sigma}|\mathbf{E}|^2}{\boldsymbol{\rho}}$$

Where: σ is the conductivity of the tissue, ρ is the mass density of the tissue and E is the RMS electrical field strength.

7. System Description and Setup

The DASY system used for performing compliance tests consists of the following items:

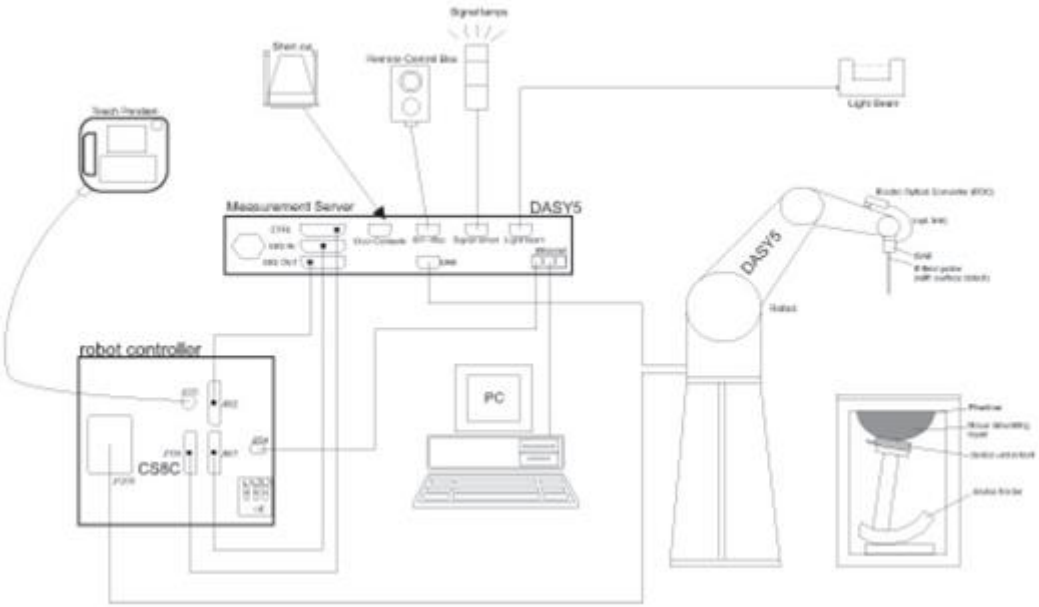

- A standard high precision 6-axis robot with controller, teach pendant and software. An arm extension for accommodating the data acquisition electronics (DAE).
- An isotropic Field probe optimized and calibrated for the targeted measurement.
- A data acquisition electronics (DAE) which performs the signal amplification, signal multiplexing, AD-conversion, offset measurements, mechanical surface detection, collision detection, etc. The unit is battery powered with standard or rechargeable batteries. The signal is optically transmitted to the EOC.
- The Electro-optical converter (EOC) performs the conversion from optical to electrical signals for the digital communication to the DAE. To use optical surface detection, a special version of the EOC is required. The EOC signal is transmitted to the measurement server.
- The function of the measurement server is to perform the time critical tasks such as signal filtering, control of the robot operation and fast movement interrupts.
- The Light Beam used is for probe alignment. This improves the (absolute) accuracy of the probe positioning.
- A computer running WinXP or Win7 and the DASY5 software.
- Remote control and teach pendant as well as additional circuitry for robot safety such as warning lamps, etc.
- The phantom, the device holder and other accessories according to the targeted measurement.

8. Measurement Procedures

The measurement procedures are as follows:

<Conducted power measurement>

(a) For WWAN power measurement, use base station simulator to configure EUT WWAN transmission in conducted connection with RF cable, at maximum power in each supported wireless interface and frequency band.
(b) Read the WWAN RF power level from the base station simulator.
(c) For WLAN/BT power measurement, use engineering software to configure EUT WLAN/BT continuously transmission, at maximum RF power in each supported wireless interface and frequency band
(d) Connect EUT RF port through RF cable to the power meter, and measure WLAN/BT output power

<SAR measurement>

(a) Use base station simulator to configure EUT WWAN transmission in radiated connection, and engineering software to configure EUT WLAN/BT continuously transmission, at maximum RF power, in the highest power channel.
(b) Place the EUT in the positions as Appendix D demonstrates.
(c) Set scan area, grid size and other setting on the DASY software.
(d) Measure SAR results for the highest power channel on each testing position.
(e) Find out the largest SAR result on these testing positions of each band
(f) Measure SAR results for other channels in worst SAR testing position if the reported SAR of highest power channel is larger than 0.8 W/kg

According to the test standard, the recommended procedure for assessing the peak spatial-average SAR value consists of the following steps:

(a) Power reference measurement
(b) Area scan
(c) Zoom scan
(d) Power drift measurement

8.1 Spatial Peak SAR Evaluation

The procedure for spatial peak SAR evaluation has been implemented according to the test standard. It can be conducted for 1g and 10g, as well as for user-specific masses. The DASY software includes all numerical procedures necessary to evaluate the spatial peak SAR value.

The base for the evaluation is a "cube" measurement. The measured volume must include the 1g and 10g cubes with the highest averaged SAR values. For that purpose, the center of the measured volume is aligned to the interpolated peak SAR value of a previously performed area scan.

The entire evaluation of the spatial peak values is performed within the post-processing engine (SEMCAD). The system always gives the maximum values for the 1g and 10g cubes. The algorithm to find the cube with highest averaged SAR is divided into the following stages:

(a) Extraction of the measured data (grid and values) from the Zoom Scan
(b) Calculation of the SAR value at every measurement point based on all stored data (A/D values and measurement parameters)
(c) Generation of a high-resolution mesh within the measured volume
(d) Interpolation of all measured values form the measurement grid to the high-resolution grid
(e) Extrapolation of the entire 3-D field distribution to the phantom surface over the distance from sensor to surface
(f) Calculation of the averaged SAR within masses of 1g and 10g

8.2 Power Reference Measurement

The Power Reference Measurement and Power Drift Measurements are for monitoring the power drift of the device under test in the batch process. The minimum distance of probe sensors to surface determines the closest measurement point to phantom surface. This distance cannot be smaller than the distance of sensor calibration points to probe tip as defined in the probe properties.

8.3 Area Scan

The area scan is used as a fast scan in two dimensions to find the area of high field values, before doing a fine measurement around the hot spot. The sophisticated interpolation routines implemented in DASY software can find the maximum found in the scanned area, within a range of the global maximum. The range (in dB0 is specified in the standards for compliance testing. For example, a 2 dB range is required in IEEE standard 1528 and IEC 62209 standards, whereby 3 dB is a requirement when compliance is assessed in accordance with the ARIB standard (Japan), if only one zoom scan follows the area scan, then only the absolute maximum will be taken as reference. For cases where multiple maximums are detected, the number of zoom scans has to be increased accordingly.

Area scan parameters extracted from FCC KDB 865664 D01v01r03 SAR measurement 100 MHz to 6 GHz.

	≤ 3 GHz	> 3 GHz
Maximum distance from closest measurement point (geometric center of probe sensors) to phantom surface	5 ± 1 mm	½·δ·ln(2) ± 0.5 mm
Maximum probe angle from probe axis to phantom surface normal at the measurement location	30° ± 1°	20° ± 1°
Maximum area scan spatial resolution: Δx_{Area}, Δy_{Area}	≤ 2 GHz: ≤ 15 mm 2 – 3 GHz: ≤ 12 mm	3 – 4 GHz: ≤ 12 mm 4 – 6 GHz: ≤ 10 mm
	When the x or y dimension of the test device, in the measurement plane orientation, is smaller than the above, the measurement resolution must be ≤ the corresponding x or y dimension of the test device with at least one measurement point on the test device.	

8.4 Zoom Scan

Zoom scans are used assess the peak spatial SAR values within a cubic averaging volume containing 1 gram and 10 gram of simulated tissue. The zoom scan measures points (refer to table below) within a cube shoes base faces are centered on the maxima found in a preceding area scan job within the same procedure. When the measurement is done, the zoom scan evaluates the averaged SAR for 1 gram and 10 gram and displays these values next to the job's label.

Zoom scan parameters extracted from FCC KDB 865664 D01v01r03 SAR measurement 100 MHz to 6 GHz.

			≤ 3 GHz	> 3 GHz
Maximum zoom scan spatial resolution: Δx_{Zoom}, Δy_{Zoom}			≤ 2 GHz: ≤ 8 mm 2 – 3 GHz: ≤ 5 mm*	3 – 4 GHz: ≤ 5 mm* 4 – 6 GHz: ≤ 4 mm*
Maximum zoom scan spatial resolution, normal to phantom surface	uniform grid: $\Delta z_{Zoom}(n)$		≤ 5 mm	3 – 4 GHz: ≤ 4 mm 4 – 5 GHz: ≤ 3 mm 5 – 6 GHz: ≤ 2 mm
	graded grid	$\Delta z_{Zoom}(1)$: between 1st two points closest to phantom surface	≤ 4 mm	3 – 4 GHz: ≤ 3 mm 4 – 5 GHz: ≤ 2.5 mm 5 – 6 GHz: ≤ 2 mm
		$\Delta z_{Zoom}(n>1)$: between subsequent points	$\leq 1.5 \cdot \Delta z_{Zoom}(n-1)$	
Minimum zoom scan volume	x, y, z		≥ 30 mm	3 – 4 GHz: ≥ 28 mm 4 – 5 GHz: ≥ 25 mm 5 – 6 GHz: ≥ 22 mm

Note: δ is the penetration depth of a plane-wave at normal incidence to the tissue medium; see draft standard IEEE P1528-2011 for details.

* When zoom scan is required and the *reported* SAR from the *area scan based 1-g SAR estimation* procedures of KDB 447498 is ≤ 1.4 W/kg, ≤ 8 mm, ≤ 7 mm and ≤ 5 mm zoom scan resolution may be applied, respectively, for 2 GHz to 3 GHz, 3 GHz to 4 GHz and 4 GHz to 6 GHz.

8.5 Volume Scan Procedures

The volume scan is used for assess overlapping SAR distributions for antennas transmitting in different frequency bands. It is equivalent to an oversized zoom scan used in standalone measurements. The measurement volume will be used to enclose all the simultaneous transmitting antennas. For antennas transmitting simultaneously in different frequency bands, the volume scan is measured separately in each frequency band. In order to sum correctly to compute the 1g aggregate SAR, the EUT remain in the same test position for all measurements and all volume scan use the same spatial resolution and grid spacing. When all volume scan were completed, the software, SEMCAD postprocessor can combine and subsequently superpose these measurement data to calculating the multiband SAR.

8.6 Power Drift Monitoring

All SAR testing is under the EUT install full charged battery and transmit maximum output power. In DASY measurement software, the power reference measurement and power drift measurement procedures are used for monitoring the power drift of EUT during SAR test. Both these procedures measure the field at a specified reference position before and after the SAR testing. The software will calculate the field difference in dB. If the power drifts more than 5%, the SAR will be retested.

9. Test Equipment List

Manufacturer	Name of Equipment	Type/Model	Serial Number	Calibration	
				Last Cal.	Due Date
SPEAG	2450MHz System Validation Kit	D2450V2	736	Aug. 21, 2014	Aug. 20, 2015
SPEAG	5GHz System Validation Kit	D5GHzV2	1040	Jun. 20, 2014	Jun. 19, 2015
SPEAG	Data Acquisition Electronics	DAE4	1279	Jul. 23, 2014	Jul. 22, 2015
SPEAG	Dosimetric E-Field Probe	EX3DV4	3873	Aug. 26, 2014	Aug. 25, 2015
SPEAG	Dosimetric E-Field Probe	EX3DV4	3954	Nov. 04, 2013	Nov. 03, 2014
Wisewind	Thermometer	HTC-1	TM642	Oct. 22, 2013	Oct. 21, 2014
Wisewind	Thermometer	HTC-1	TM281	Oct. 22, 2013	Oct. 21, 2014
SPEAG	Device Holder	N/A	N/A	NCR	NCR
R&S	Signal Generator	SMU200A	102502	Jul. 07, 2014	Jul. 06, 2015
SPEAG	Dielectric Probe Kit	DAK-3.5	1138	Nov. 03, 2013	Nov. 02, 2014
Agilent	ENA Network Analyzer	E5071C	MY46316648	Feb. 07, 2014	Feb. 06, 2015
Anritsu	Power Meter	ML2495A	1036004	Aug. 09, 2014	Aug. 08, 2015
Anritsu	Power Sensor	MA2411B	1027253	Aug. 11, 2014	Aug. 10, 2015
R&S	Spectrum Analyzer	FSP 7	101131	Jul. 10, 2014	Jul. 09, 2015
Agilent	Dual Directional Coupler	778D	50422	Note1	
Woken	Attenuator 1	WK0602-XX	N/A	Note1	
PE	Attenuator 2	PE7005-10	N/A	Note1	
PE	Attenuator 3	PE7005- 3	N/A	Note1	
AR	Power Amplifier	5S1G4M2	0328767	Note1	
Mini-Circuits	Power Amplifier	ZVE-3W	162601250	Note1	
Mini-Circuits	Power Amplifier	ZHL-42W+	13440021344	Note1	

General Note:

1. Prior to system verification and validation, the path loss from the signal generator to the system check source and the power meter, which includes the amplifier, cable, attenuator and directional coupler, was measured by the network analyzer. The reading of the power meter was offset by the path loss difference between the path to the power meter and the path to the system check source to monitor the actual power level fed to the system check source.

10. System Verification

10.1 Tissue Verification

The following tissue formulations are provided for reference only as some of the parameters have not been thoroughly verified. The composition of ingredients may be modified accordingly to achieve the desired target tissue parameters required for routine SAR evaluation.

Frequency (MHz)	Water (%)	Sugar (%)	Cellulose (%)	Salt (%)	Preventol (%)	DGBE (%)	Conductivity (σ)	Permittivity (εr)
For Head								
750	41.1	57.0	0.2	1.4	0.2	0	0.89	41.9
835	40.3	57.9	0.2	1.4	0.2	0	0.90	41.5
900	40.3	57.9	0.2	1.4	0.2	0	0.97	41.5
1800, 1900, 2000	55.2	0	0	0.3	0	44.5	1.40	40.0
2450	55.0	0	0	0	0	45.0	1.80	39.2
2600	54.8	0	0	0.1	0	45.1	1.96	39.0
For Body								
750	51.7	47.2	0	0.9	0.1	0	0.96	55.5
835	50.8	48.2	0	0.9	0.1	0	0.97	55.2
900	50.8	48.2	0	0.9	0.1	0	1.05	55.0
1800, 1900, 2000	70.2	0	0	0.4	0	29.4	1.52	53.3
2450	68.6	0	0	0	0	31.4	1.95	52.7
2600	68.1	0	0	0.1	0	31.8	2.16	52.5

Simulating Liquid for 5GHz, Manufactured by SPEAG

Ingredients	(% by weight)
Water	64~78%
Mineral oil	11~18%
Emulsifiers	9~15%
Additives and Salt	2~3%

<Tissue Dielectric Parameter Check Results>

Frequency (MHz)	Tissue Type	Liquid Temp. (℃)	Conductivity (σ)	Permittivity (ε_r)	Conductivity Target (σ)	Permittivity Target (ε_r)	Delta (σ) (%)	Delta (ε_r) (%)	Limit (%)	Date
2450	Body	22.6	2.005	53.959	1.95	52.70	2.82	2.39	±5	2014/9/25
2450	Body	22.6	2.005	53.959	1.95	52.70	2.82	2.39	±5	2014/9/25
5200	Body	22.2	5.441	47.382	5.30	49.00	2.66	-3.30	±5	2014/9/25
5200	Body	22.5	5.388	48.732	5.30	49.00	1.66	-0.55	±5	2014/9/26
5300	Body	22.2	5.562	47.093	5.42	48.90	2.62	-3.70	±5	2014/9/25
5300	Body	22.5	5.522	48.584	5.42	48.90	1.88	-0.65	±5	2014/9/26
5600	Body	22.2	5.973	46.693	5.77	48.50	3.52	-3.73	±5	2014/9/25
5600	Body	22.5	5.902	48.043	5.77	48.50	2.29	-0.94	±5	2014/9/26
5800	Body	22.2	6.253	46.376	6.00	48.20	4.22	-3.78	±5	2014/9/25
5800	Body	22.5	6.162	47.730	6.00	48.20	2.70	-0.98	±5	2014/9/26

10.2 System Performance Check Results

Comparing to the original SAR value provided by SPEAG, the verification data should be within its specification of 10 %. Below table shows the target SAR and measured SAR after normalized to 1W input power. The table below indicates the system performance check can meet the variation criterion and the plots can be referred to Appendix A of this report.

Date	Frequency (MHz)	Tissue Type	Input Power (mW)	Dipole S/N	Probe S/N	DAE S/N	Measured 1g SAR (W/kg)	Targeted 1g SAR (W/kg)	Normalized 1g SAR (W/kg)	Deviation (%)
2014/9/25	2450	Body	250	D2450V2-736	EX3DV4 - SN3873	DAE4 Sn1279	12.90	50.60	51.60	1.98
2014/9/25	2450	Body	250	D2450V2-736	EX3DV4 - SN3954	DAE4 Sn1279	13.10	50.60	52.40	3.56
2014/9/25	5200	Body	100	D5GHzV2-1040	EX3DV4 - SN3954	DAE4 Sn1279	7.69	77.80	76.90	-1.16
2014/9/26	5200	Body	100	D5GHzV2-1040	EX3DV4 - SN3954	DAE4 Sn1279	7.62	77.80	76.20	-2.06
2014/9/25	5300	Body	100	D5GHzV2-1040	EX3DV4 - SN3954	DAE4 Sn1279	7.65	79.10	76.50	-3.29
2014/9/26	5300	Body	100	D5GHzV2-1040	EX3DV4 - SN3954	DAE4 Sn1279	7.60	79.10	76.00	-3.92
2014/9/25	5600	Body	100	D5GHzV2-1040	EX3DV4 - SN3954	DAE4 Sn1279	8.70	82.70	87.00	5.20
2014/9/26	5600	Body	100	D5GHzV2-1040	EX3DV4 - SN3954	DAE4 Sn1279	8.60	82.70	86.00	3.99
2014/9/25	5800	Body	100	D5GHzV2-1040	EX3DV4 - SN3954	DAE4 Sn1279	8.10	77.30	81.00	4.79
2014/9/26	5800	Body	100	D5GHzV2-1040	EX3DV4 - SN3954	DAE4 Sn1279	7.98	77.30	79.80	3.23

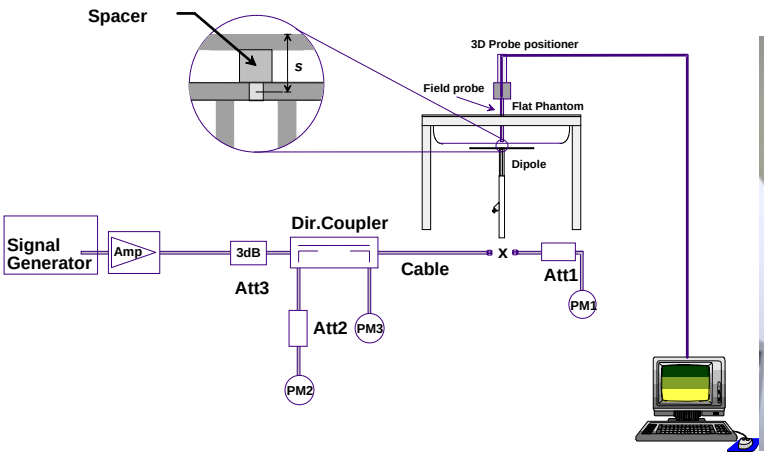

Fig 8.3.1 System Performance Check Setup

Fig 8.3.2 Setup Photo

11. RF Exposure Positions

11.1 Wireless Router

Some battery-operated handsets have the capability to transmit and receive user through simultaneous transmission of WIFI simultaneously with a separate licensed transmitter. The FCC has provided guidance in FCC HDB Publication 941225 D06v01r01 where SAR test considerations for handsets (L x W ≥ 9 cm x 5 cm) are based on a composite test separation distance of 10mm from the front, back and edges of the device containing transmitting antennas within 2.5cm of their edges, determined form general mixed use conditions for this type of devices. Since the hotspot SAR results may overlap with the body-worn accessory SAR requirements, the more conservative configurations can be considered, thus excluding some body-worn accessory SAR tests.

When the user enables the personal wireless router functions for the handset, actual operations include simultaneous transmission of both the WIFI transmitter and another licensed transmitter. Both transmitters often do not transmit at the same transmitting frequency and thus cannot be evaluated for SAR under actual use conditions due to the limitations of the SAR assessment probes. Therefore, SAR must be evaluated for each frequency transmission and mode separately and spatially summed with the WIFI transmitter according to FCC KDB Publication 447498 D01v05r02 publication procedures. The “Portable Hotspot” feature on the handset was NOT activated during SAR assessments, to ensure the SAR measurements were evaluated for a single transmission frequency RF signal at a time.

12. Conducted RF Output Power (Unit: dBm)

<WLAN Conducted Power>

General Note:

1. Per April 2013 TCB Workshop notes, full SAR tests for SISO IEEE 802.11ac configurations were not required because the average output power was not more than 0.25 dB higher than IEEE 802.11a mode. IEEE 802.11ac was evaluated for the highest IEEE 802.11a position in each 5 GHz band and exposure condition.
2. For 2.4GHz WLAN SAR testing, highest average RF output power channel for the lowest data rate for 802.11b were selected for SAR evaluation. 802.11g/n HT20/HT40 were not investigated since the average output powers over all channels and data rates were not more than 0.25 dB higher than the tested channel in the lowest data rate of 802.11b mode.
3. Following KDB 248227 D01 v01r02, 802.11g/n HT20/HT40 average output power is higher than 1/4dB higher than 802.11b mode, these modes SAR will be verified at the highest RF exposure position found in 802.11b SAR testing.
4. For 5 GHz WLAN SAR testing, highest average RF output power channel for the lowest data rate for 802.11a were selected for SAR evaluation. 802.11n HT20/HT40 modes were not investigated since the average output powers over all channels and data rates were not more than 0.25 dB higher than the tested channel in the lowest data rate of 802.11a mode.
5. Following KDB 248227 D01 v01r02, 802.11n/ac HT20/HT40/VHT20/VHT40 average output power is higher than 1/4dB higher than 802.11b mode, these modes SAR will be verified at the highest RF exposure position found in 802.11a SAR testing.

<2.4GHz WLAN Antenna 0>

WLAN 2.4GHz 802.11b Average Power (dBm)					
Power vs. Channel					
Channel	Frequency (MHz)	Data Rate	2Mbps	5.5Mbps	11Mbps
		1Mbps			
CH 1	2412	17.70	17.93	17.93	17.87
CH 6	2437	17.94			
CH 11	2462	17.83			

WLAN 2.4GHz 802.11g Average Power (dBm)									
Power vs. Channel			Power vs. Data Rate						
Channel	Frequency (MHz)	Data Rate	9Mbps	12Mbps	18Mbps	24Mbps	36Mbps	48Mbps	54Mbps
		6Mbps							
CH 1	2412	15.76	17.77	17.77	17.83	17.69	17.73	17.76	17.75
CH 6	2437	17.85							
CH 11	2462	14.26							

WLAN 2.4GHz 802.11n-HT20 Average Power (dBm)									
Power vs. Channel			Power vs. MCS Index						
Channel	Frequency (MHz)	MCS Index	MCS1	MCS2	MCS3	MCS4	MCS5	MCS6	MCS7
		MCS0							
CH 1	2412	16.65	16.81	16.81	16.76	16.73	16.80	16.75	16.78
CH 6	2437	16.83							
CH 11	2462	16.74							

WLAN 2.4GHz 802.11n-HT40 Average Power (dBm)									
Power vs. Channel			Power vs. MCS Index						
Channel	Frequency (MHz)	MCS Index	MCS1	MCS2	MCS3	MCS4	MCS5	MCS6	MCS7
		MCS0							
CH 3	2422	17.06	16.98	17.02	16.98	17.01	16.97	17.05	16.96
CH 6	2437	16.78							
CH 9	2452	16.74							

<2.4GHz WLAN Antenna 0+1>

WLAN 2.4GHz 802.11n-HT20 Average Power (dBm)									
Power vs. Channel			Power vs. MCS Index						
Channel	Frequency (MHz)	MCS Index MCS0	MCS1	MCS2	MCS3	MCS4	MCS5	MCS6	MCS7
CH 1	2412	20.07	19.70	19.66	19.70	19.59	19.62	19.61	19.61
CH 6	2437	19.84							
CH 11	2462	19.96							

WLAN 2.4GHz 802.11n-HT40 Average Power (dBm)									
Power vs. Channel			Power vs. MCS Index						
Channel	Frequency (MHz)	MCS Index MCS0	MCS1	MCS2	MCS3	MCS4	MCS5	MCS6	MCS7
CH 3	2422	19.87	19.72	19.63	19.47	19.45	19.38	19.38	19.55
CH 6	2437	19.95							
CH 9	2452	18.73							

<5GHz WLAN Antenna 0>

WLAN 5GHz 802.11a Average Power (dBm)									
Power vs. Channel			Power vs. Data Rate						
Channel	Frequency (MHz)	Data Rate 6Mbps	9Mbps	12Mbps	18Mbps	24Mbps	36Mbps	48Mbps	54Mbps
CH 36	5180	15.21	15.16	15.08	15.19	15.16	15.13	15.09	15.15
CH 40	5200	15.01							
CH 44	5220	14.76							
CH 48	5240	15.02							
CH 52	5260	17.81	17.88	17.84	17.90	17.83	17.90	17.74	17.83
CH 56	5280	17.80							
CH 60	5300	17.85							
CH 64	5320	17.93							
CH 100	5500	17.54	17.88	17.77	17.64	17.83	17.85	17.74	17.75
CH 104	5520	17.63							
CH 108	5540	17.66							
CH 112	5560	17.72							
CH 116	5580	17.92							
CH 132	5660	17.75							
CH 136	5680	17.77							
CH 140	5700	17.47							
CH 149	5745	17.76	17.74	17.67	17.75	17.67	17.67	17.73	17.67
CH 153	5765	17.71							
CH 157	5785	17.70							
CH 161	5805	17.50							

WLAN 5GHz 802.11n-HT20 Average Power (dBm)									
Power vs. Channel			Power vs. MCS Index						
Channel	Frequency (MHz)	Data Rate	9Mbps	12Mbps	18Mbps	24Mbps	36Mbps	48Mbps	54Mbps
		6Mbps							
CH 36	5180	15.36	15.27	15.25	15.19	15.28	15.34	15.25	15.21
CH 40	5200	15.12							
CH 44	5220	14.82							
CH 48	5240	15.10							
CH 52	5260	16.82	16.74	16.78	16.69	16.77	16.80	16.75	16.69
CH 56	5280	16.72							
CH 60	5300	16.69							
CH 64	5320	16.66							
CH 100	5500	16.87	16.74	16.69	16.76	16.83	16.67	16.72	16.64
CH 104	5520	16.81							
CH 108	5540	16.76							
CH 112	5560	16.70							
CH 116	5580	16.69							
CH 132	5660	16.70							
CH 136	5680	16.73							
CH 140	5700	16.64							
CH 149	5745	17.18	17.05	17.06	17.00	16.94	16.92	16.91	16.80
CH 153	5765	17.10							
CH 157	5785	17.15							
CH 161	5805	17.12							

WLAN 5GHz 802.11n-HT40 Average Power (dBm)									
Power vs. Channel			Power vs. MCS Index						
Channel	Frequency (MHz)	MCS Index	MCS1	MCS2	MCS3	MCS4	MCS5	MCS6	MCS7
		MCS0							
CH 38	5190	16.81	16.76	16.71	16.70	16.77	16.73	16.69	16.74
CH 46	5230	16.75							
CH 54	5270	16.68	16.54	16.61	16.66	16.63	16.66	16.59	16.55
CH 62	5310	16.61							
CH 102	5510	16.72	16.65	16.66	16.69	16.61	16.63	16.67	16.61
CH 110	5550	16.58							
CH 134	5670	16.68							
CH 151	5755	17.20	17.12	17.04	16.99	16.90	16.83	16.91	16.81
CH 159	5795	17.17							

WLAN 5GHz 802.11ac-VHT20 Average Power (dBm)										
Power vs. Channel			Power vs. MCS Index							
Channel	Frequency (MHz)	MCS Index MCS0	MCS1	MCS2	MCS3	MCS4	MCS5	MCS6	MCS7	MCS8
CH 36	5180	14.74	14.71	14.64	14.59	14.63	14.56	14.61	14.70	14.66
CH 40	5200	14.50								
CH 44	5220	14.22								
CH 48	5240	14.68								
CH 52	5260	16.64	16.60	16.56	16.63	16.59	16.54	16.61	16.56	16.52
CH 56	5280	16.60								
CH 60	5300	16.60								
CH 64	5320	16.65								
CH 100	5500	16.65	16.72	16.68	16.64	16.67	16.70	16.57	16.66	16.62
CH 104	5520	16.60								
CH 108	5540	16.71								
CH 112	5560	16.66								
CH 116	5580	16.74								
CH 132	5660	16.67								
CH 136	5680	16.69								
CH 140	5700	16.72								
CH 149	5745	17.12	16.88	16.91	16.78	16.69	16.72	16.67	16.62	16.57
CH 153	5765	17.08								
CH 157	5785	17.06								
CH 161	5805	16.96								

WLAN 5GHz 802.11ac-VHT40 Average Power (dBm)											
Power vs. Channel			Power vs. MCS Index								
Channel	Frequency (MHz)	MCS Index MCS0	MCS1	MCS2	MCS3	MCS4	MCS5	MCS6	MCS7	MCS8	MCS9
CH 38	5190	16.93	16.75	16.73	16.87	16.84	16.71	16.68	16.86	16.78	16.83
CH 46	5230	16.87									
CH 54	5270	16.69	16.67	16.53	16.61	16.59	16.60	16.54	16.68	16.56	16.68
CH 62	5310	16.72									
CH 102	5510	16.76	16.73	16.67	16.71	16.61	16.54	16.59	16.61	16.59	16.74
CH 110	5550	16.78									
CH 134	5670	16.69									
CH 151	5755	16.72	16.62	16.68	16.53	16.60	16.51	16.55	16.48	16.53	16.43
CH 159	5795	16.65									

WLAN 5GHz 802.11ac-VHT80 Average Power (dBm)											
Power vs. Channel			Power vs. MCS Index								
Channel	Frequency (MHz)	MCS Index MCS0	MCS1	MCS2	MCS3	MCS4	MCS5	MCS6	MCS7	MCS8	MCS9
CH 42	5210	16.77	16.68	16.65	16.59	16.66	16.73	16.72	16.64	16.69	16.61
CH 58	5290	16.75	16.71	16.67	16.64	16.71	16.59	16.73	16.61	16.59	16.65
CH 106	5530	16.60	16.59	16.56	16.49	16.57	16.43	16.56	16.58	16.53	16.54
CH 155	5775	16.92	16.88	16.85	16.83	16.87	16.79	16.84	16.89	16.81	16.78

<5GHz WLAN Antenna 0+1>

WLAN 5GHz 802.11n-HT20 Average Power (dBm)									
Power vs. Channel			Power vs. MCS Index						
Channel	Frequency (MHz)	Data Rate 6Mbps	9Mbps	12Mbps	18Mbps	24Mbps	36Mbps	48Mbps	54Mbps
CH 36	5180	15.24	15.29	15.29	15.25	15.24	15.24	15.30	15.26
CH 40	5200	15.19							
CH 44	5220	15.17							
CH 48	5240	15.36							
CH 52	5260	19.65	19.70	19.67	19.68	19.64	19.60	19.67	19.70
CH 56	5280	19.70							
CH 60	5300	19.80							
CH 64	5320	19.79							
CH 100	5500	19.92	19.81	19.79	19.72	19.79	19.69	19.74	19.76
CH 104	5520	19.88							
CH 108	5540	19.80							
CH 112	5560	19.79							
CH 116	5580	19.76							
CH 132	5660	19.74							
CH 136	5680	19.69							
CH 140	5700	19.76							
CH 149	5745	19.71	19.80	19.69	19.78	19.50	19.46	19.40	19.63
CH 153	5765	19.63							
CH 157	5785	19.58							
CH 161	5805	19.88							

WLAN 5GHz 802.11n-HT40 Average Power (dBm)									
Power vs. Channel			Power vs. MCS Index						
Channel	Frequency (MHz)	MCS Index MCS0	MCS1	MCS2	MCS3	MCS4	MCS5	MCS6	MCS7
CH 38	5190	15.45	15.49	15.45	15.42	15.37	15.49	15.45	15.47
CH 46	5230	15.52							
CH 54	5270	19.74	19.68	19.72	19.64	19.72	19.72	19.77	19.71
CH 62	5310	19.79							
CH 102	5510	19.76	19.61	19.60	19.70	19.57	19.64	19.62	19.69
CH 110	5550	19.64							
CH 134	5670	19.81							
CH 151	5755	19.83	19.71	19.61	19.60	19.32	19.30	19.22	19.21
CH 159	5795	19.69							

WLAN 5GHz 802.11ac-VHT20 Average Power (dBm)										
Power vs. Channel			Power vs. MCS Index							
Channel	Frequency (MHz)	MCS Index MCS0	MCS1	MCS2	MCS3	MCS4	MCS5	MCS6	MCS7	MCS8
CH 36	5180	14.43	14.34	14.28	14.34	14.20	14.30	14.40	14.34	14.28
CH 40	5200	14.40								
CH 44	5220	14.31								
CH 48	5240	14.29								
CH 52	5260	19.77	19.62	19.67	19.68	19.68	19.61	19.64	19.68	19.71
CH 56	5280	19.73								
CH 60	5300	19.75								
CH 64	5320	19.70								
CH 100	5500	19.77	19.61	19.66	19.64	19.68	19.57	19.67	19.74	19.70
CH 104	5520	19.71								
CH 108	5540	19.68								
CH 112	5560	19.66								
CH 116	5580	19.79								
CH 132	5660	19.59								
CH 136	5680	19.64								
CH 140	5700	19.71								
CH 149	5745	19.76	19.93	19.89	19.88	19.73	19.70	19.74	19.73	19.65
CH 153	5765	19.65								
CH 157	5785	19.62								
CH 161	5805	19.99								

WLAN 5GHz 802.11ac-VHT40 Average Power (dBm)											
Power vs. Channel			Power vs. MCS Index								
Channel	Frequency (MHz)	MCS Index MCS0	MCS1	MCS2	MCS3	MCS4	MCS5	MCS6	MCS7	MCS8	MCS9
CH 38	5190	17.10	16.98	17.01	17.00	17.01	17.01	16.93	16.94	16.87	16.92
CH 46	5230	16.88									
CH 54	5270	19.66	19.72	19.70	19.71	19.67	19.71	19.73	19.73	19.61	19.62
CH 62	5310	19.78									
CH 102	5510	19.77	19.68	19.62	19.67	19.67	19.66	19.60	19.71	19.71	19.67
CH 110	5550	19.75									
CH 134	5670	19.79									
CH 151	5755	19.87	19.73	19.46	19.37	19.30	19.22	19.12	19.15	19.05	19.16
CH 159	5795	19.71									

WLAN 5GHz 802.11ac-VHT80 Average Power (dBm)											
Power vs. Channel			Power vs. MCS Index								
Channel	Frequency (MHz)	MCS Index MCS0	MCS1	MCS2	MCS3	MCS4	MCS5	MCS6	MCS7	MCS8	MCS9
CH 42	5210	19.83	19.69	19.76	19.74	19.73	19.71	19.73	19.68	19.78	19.65
CH 58	5290	19.80	19.66	19.68	19.70	19.64	19.67	19.68	19.64	19.67	19.73
CH 106	5530	19.70	19.60	19.59	19.54	19.65	19.49	19.61	19.58	19.61	19.61
CH 155	5775	19.87	19.73	19.57	19.48	19.37	19.38	19.29	19.41	19.39	19.46

13. Antenna Location

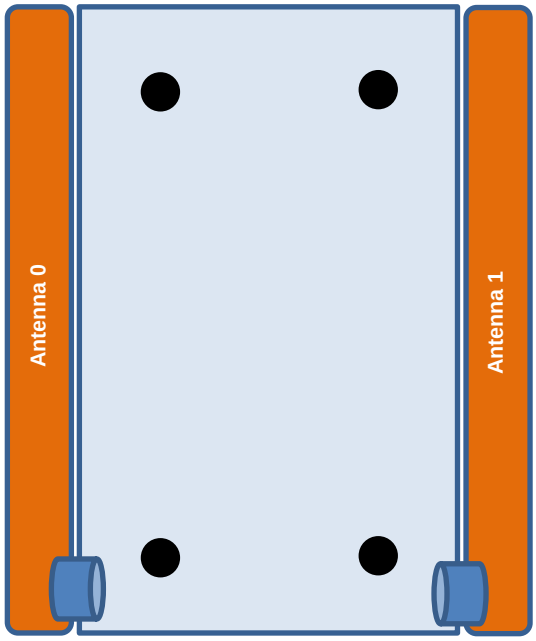

Back View

14. SAR Test Results

General Note:

1. Per KDB 447498 D01v05r02, the reported SAR is the measured SAR value adjusted for maximum tune-up tolerance.
   a. Tune-up scaling Factor = tune-up limit power (mW) / EUT RF power (mW), where tune-up limit is the maximum rated power among all production units.
   b. For WLAN: Reported SAR(W/kg)= Measured SAR(W/kg)* Tune-up scaling factor
2. Per KDB 447498 D01v05r02, for each exposure position, testing of other required channels within the operating mode of a frequency band is not required when the *reported* 1-g or 10-g SAR for the mid-band or highest output power channel is:
   - ≤ 0.8 W/kg or 2.0 W/kg, for 1-g or 10-g respectively, when the transmission band is ≤ 100 MHz
   - ≤ 0.6 W/kg or 1.5 W/kg, for 1-g or 10-g respectively, when the transmission band is between 100 MHz and 200 MHz
   - ≤ 0.4 W/kg or 1.0 W/kg, for 1-g or 10-g respectively, when the transmission band is ≥ 200 MHz
3. During SAR testing the WLAN transmission was verified using a spectrum analyzer.

14.1 Body SAR

<WLAN SAR>

Plot No.	Band	Mode	Test Position	Gap (cm)	Antenna	Antenna Angle	Ch.	Freq. (MHz)	Average Power (dBm)	Tune-Up Limit (dBm)	Tune-up Scaling Factor	Power Drift (dB)	Measured 1g SAR (W/kg)	Reported 1g SAR (W/kg)
01	WLAN2.4GHz	802.11b 1Mbps	Back	0.5cm	0	0	6	2437	17.94	18.00	1.014	0.07	1.390	**1.409**
	WLAN2.4GHz	802.11b 1Mbps	Back	0.5cm	0	0	1	2412	17.70	18.00	1.072	-0.1	1.120	1.200
	WLAN2.4GHz	802.11b 1Mbps	Back	0.5cm	0	0	11	2462	17.83	18.00	1.040	-0.12	1.150	1.196
	WLAN2.4GHz	802.11b 1Mbps	Back	0.5cm	0	90	6	2437	17.94	18.00	1.014	0.07	0.020	0.020
	WLAN2.4GHz	802.11b 1Mbps	Tip	1.0cm	0	90	6	2437	17.94	18.00	1.014	-0.04	0.598	0.606
	WLAN2.4GHz	802.11b 1Mbps	Back	0.5cm	0	180	6	2437	17.94	18.00	1.014	0.06	1.240	1.257
	WLAN2.4GHz	802.11b 1Mbps	Back	0.5cm	0	180	1	2412	17.70	18.00	1.072	0.08	1.040	1.114
	WLAN2.4GHz	802.11b 1Mbps	Back	0.5cm	0	180	11	2462	17.83	18.00	1.040	0.08	1.170	1.217
	WLAN2.4GHz	802.11n-HT20 MCS8	Back	0.5cm	0+1	0	1	2412	20.07	20.50	1.104	-0.01	0.930	1.026
	WLAN2.4GHz	802.11n-HT20 MCS8	Back	0.5cm	0+1	0	6	2437	19.84	20.50	1.165	-0.02	1.010	1.177
	WLAN2.4GHz	802.11n-HT20 MCS8	Back	0.5cm	0+1	0	11	2462	19.96	20.50	1.132	0.01	0.977	1.106
	WLAN2.4GHz	802.11n-HT20 MCS8	Back	0.5cm	0+1	90	1	2412	20.07	20.50	1.104	0.01	0.030	0.033
	WLAN2.4GHz	802.11n-HT20 MCS8	Tip	1.0cm	0+1	90	1	2412	20.07	20.50	1.104	0.06	0.624	0.689
	WLAN2.4GHz	802.11n-HT20 MCS8	Back	0.5cm	0+1	180	1	2412	20.07	20.50	1.104	0.16	0.856	0.945
	WLAN2.4GHz	802.11n-HT20 MCS8	Back	0.5cm	0+1	180	6	2437	19.84	20.50	1.165	0.07	0.850	0.990
	WLAN2.4GHz	802.11n-HT20 MCS8	Back	0.5cm	0+1	180	11	2462	19.96	20.50	1.132	0.07	0.906	1.026

Plot No.	Band	Mode	Test Position	Gap (cm)	Antenna	Antenna Angle	Ch.	Freq. (MHz)	Average Power (dBm)	Tune-Up Limit (dBm)	Tune-up Scaling Factor	Power Drift (dB)	Measured 1g SAR (W/kg)	Reported 1g SAR (W/kg)
	WLAN5GHz	802.11a 6Mbps	Back	0.5cm	0	0	36	5180	15.21	16.00	1.199	-0.01	0.428	0.513
	WLAN5GHz	802.11a 6Mbps	Back	0.5cm	0	90	36	5180	15.21	16.00	1.199	0.07	0.029	0.035
	WLAN5GHz	802.11a 6Mbps	Tip	1.0cm	0	90	36	5180	15.21	16.00	1.199	0.1	0.199	0.239
	WLAN5GHz	802.11a 6Mbps	Back	0.5cm	0	180	36	5180	15.21	16.00	1.199	-0.03	0.478	0.573
02	WLAN5GHz	802.11n-HT40 MCS0	Back	0.5cm	0	180	38	5190	16.81	17.00	1.045	-0.12	0.699	**0.730**
	WLAN5GHz	802.11ac-VHT40 MCS0	Back	0.5cm	0	180	38	5190	16.93	17.00	1.016	-0.08	0.631	0.641
	WLAN5GHz	802.11ac-VHT80 MCS0	Back	0.5cm	0	180	42	5210	16.77	17.00	1.054	-0.12	0.443	0.467
	WLAN5GHz	802.11n-HT20 MCS8	Back	0.5cm	0+1	0	48	5240	15.36	16.00	1.160	-0.13	0.137	0.159
	WLAN5GHz	802.11ac-VHT40 MCS0	Back	0.5cm	0+1	0	38	5190	17.10	18.00	1.230	-0.04	0.270	0.332
	WLAN5GHz	802.11ac-VHT80 MCS0	Back	0.5cm	0+1	0	42	5210	19.83	20.00	1.040	0.04	0.198	0.206
	WLAN5GHz	802.11n-HT20 MCS8	Back	0.5cm	0+1	90	48	5240	15.36	16.00	1.160	0.1	0.005	0.005
	WLAN5GHz	802.11n-HT20 MCS0	Tip	1.0cm	0+1	90	48	5240	15.36	16.00	1.160	0.11	0.055	0.064
	WLAN5GHz	802.11n-HT20 MCS8	Back	0.5cm	0+1	180	48	5240	15.36	16.00	1.160	-0.13	0.063	0.073
	WLAN5GHz	802.11a 6Mbps	Back	0.5cm	0	0	64	5320	17.93	18.00	1.016	0.05	0.384	0.390
	WLAN5GHz	802.11a 6Mbps	Back	0.5cm	0	90	64	5320	17.93	18.00	1.016	0.19	0.074	0.075
	WLAN5GHz	802.11a 6Mbps	Tip	1.0cm	0	90	64	5320	17.93	18.00	1.016	0	0.456	0.463
	WLAN5GHz	802.11a 6Mbps	Back	0.5cm	0	180	64	5320	17.93	18.00	1.016	-0.08	0.605	0.615
03	WLAN5GHz	802.11ac-VHT80 MCS0	Back	0.5cm	0	180	58	5290	16.75	17.00	1.059	0.09	0.717	**0.759**
	WLAN5GHz	802.11n-HT20 MCS8	Back	0.5cm	0+1	0	60	5300	19.80	20.00	1.047	-0.02	0.372	0.389
	WLAN5GHz	802.11ac-VHT80 MCS0	Back	0.5cm	0+1	0	58	5290	19.80	20.00	1.048	-0.04	0.117	0.123
	WLAN5GHz	802.11n-HT20 MCS8	Back	0.5cm	0+1	90	60	5300	19.80	20.00	1.047	0.17	0.039	0.041
	WLAN5GHz	802.11n-HT20 MCS8	Tip	1.0cm	0+1	90	60	5300	19.80	20.00	1.047	-0.15	0.164	0.172
	WLAN5GHz	802.11n-HT20 MCS8	Back	0.5cm	0+1	180	60	5300	19.80	20.00	1.047	-0.12	0.188	0.197
	WLAN5GHz	802.11a 6Mbps	Back	0.5cm	0	0	116	5580	17.92	18.00	1.019	0.07	0.567	0.578
	WLAN5GHz	802.11a 6Mbps	Back	0.5cm	0	0	108	5540	17.66	18.00	1.081	0.02	0.484	0.523
04	WLAN5GHz	802.11a 6Mbps	Back	0.5cm	0	0	136	5680	17.77	18.00	1.054	0.12	0.794	**0.837**
	WLAN5GHz	802.11a 6Mbps	Back	0.5cm	0	90	116	5580	17.92	18.00	1.019	0.03	0.112	0.114
	WLAN5GHz	802.11a 6Mbps	Tip	1.0cm	0	90	116	5580	17.92	18.00	1.019	-0.15	0.542	0.552
	WLAN5GHz	802.11a 6Mbps	Back	0.5cm	0	180	116	5580	17.92	18.00	1.019	-0.12	0.735	0.749
	WLAN5GHz	802.11a 6Mbps	Back	0.5cm	0	180	108	5540	17.66	18.00	1.081	-0.02	0.639	0.691
	WLAN5GHz	802.11a 6Mbps	Back	0.5cm	0	180	136	5680	17.77	18.00	1.054	-0.06	0.787	0.830
	WLAN5GHz	802.11ac-VHT80 MCS0	Back	0.5cm	0	180	106	5530	16.60	17.00	1.096	-0.08	0.484	0.531
	WLAN5GHz	802.11n-HT20 MCS8	Back	0.5cm	0+1	0	100	5500	19.92	20.00	1.020	-0.1	0.193	0.197
	WLAN5GHz	802.11n-HT20 MCS8	Back	0.5cm	0+1	90	100	5500	19.92	20.00	1.020	0.17	0.040	0.041
	WLAN5GHz	802.11n-HT20 MCS8	Tip	1.0cm	0+1	90	100	5500	19.92	20.00	1.020	0.03	0.144	0.147
	WLAN5GHz	802.11n-HT20 MCS8	Back	0.5cm	0+1	180	100	5500	19.92	20.00	1.020	-0.14	0.248	0.253
	WLAN5GHz	802.11ac-VHT80 MCS0	Back	0.5cm	0+1	180	106	5530	19.70	20.00	1.073	0.07	0.069	0.074
	WLAN5GHz	802.11a 6Mbps	Back	0.5cm	0	0	149	5745	17.76	18.00	1.057	0.14	0.550	0.581
05	WLAN5GHz	802.11ac-VHT80 MCS0	Back	0.5cm	0	0	155	5775	16.92	17.00	1.019	0.06	0.640	**0.652**
	WLAN5GHz	802.11a 6Mbps	Back	0.5cm	0	90	149	5745	17.76	18.00	1.057	0.12	0.076	0.080
	WLAN5GHz	802.11a 6Mbps	Tip	1.0cm	0	90	149	5745	17.76	18.00	1.057	-0.05	0.411	0.434
	WLAN5GHz	802.11a 6Mbps	Back	0.5cm	0	180	149	5745	17.76	18.00	1.057	0.02	0.498	0.526
	WLAN5GHz	802.11n-HT20 MCS8	Back	0.5cm	0+1	0	161	5805	19.88	20.00	1.027	0.04	0.280	0.288
	WLAN5GHz	802.11ac-VHT80 MCS0	Back	0.5cm	0+1	0	155	5775	19.87	20.00	1.031	-0.15	0.077	0.079
	WLAN5GHz	802.11n-HT20 MCS8	Back	0.5cm	0+1	90	161	5805	19.88	20.00	1.027	0.11	0.052	0.053
	WLAN5GHz	802.11n-HT20 MCS8	Tip	1.0cm	0+1	90	161	5805	19.88	20.00	1.027	0.04	0.166	0.171
	WLAN5GHz	802.11n-HT20 MCS8	Back	0.5cm	0+1	180	161	5805	19.88	20.00	1.027	0.05	0.231	0.237

14.2 Repeated SAR Measurement

No.	Band	Mode	Test Position	Gap (cm)	Antenna	Antenna Angle	Ch.	Freq. (MHz)	Average Power (dBm)	Tune-Up Limit (dBm)	Tune-up Scaling Factor	Power Drift (dB)	Measured 1g SAR (W/kg)	Ratio	Reported 1g SAR (W/kg)
1st	WLAN2.4GHz	802.11b 1Mbps	Back	0.5cm	0	0	6	2437	17.94	18.00	1.014	0.07	1.390	-	1.409
2nd	WLAN2.4GHz	802.11b 1Mbps	Back	0.5cm	0	0	6	2437	17.94	18.00	1.014	-0.1	1.330	1.05	1.349

General Note:

1. Per KDB 865664 D01v01r03, for each frequency band, repeated SAR measurement is required only when the measured SAR is ≥0.8W/kg
2. Per KDB 865664 D01v01r03, if the ratio among the repeated measurement is ≤ 1.2 and the measured SAR <1.45W/kg, only one repeated measurement is required.
3. The ratio is the difference in percentage between original and repeated *measured SAR*.
4. All measurement SAR result is scaled-up to account for tune-up tolerance and is compliant.

Test Engineer： Ken Li, Aaron Chen, Domo Hsiao and Jerry Hu

15. Uncertainty Assessment

The component of uncertainly may generally be categorized according to the methods used to evaluate them. The evaluation of uncertainly by the statistical analysis of a series of observations is termed a Type An evaluation of uncertainty. The evaluation of uncertainty by means other than the statistical analysis of a series of observation is termed a Type B evaluation of uncertainty. Each component of uncertainty, however evaluated, is represented by an estimated standard deviation, termed standard uncertainty, which is determined by the positive square root of the estimated variance.

A Type A evaluation of standard uncertainty may be based on any valid statistical method for treating data. This includes calculating the standard deviation of the mean of a series of independent observations; using the method of least squares to fit a curve to the data in order to estimate the parameter of the curve and their standard deviations; or carrying out an analysis of variance in order to identify and quantify random effects in certain kinds of measurement.

A type B evaluation of standard uncertainty is typically based on scientific judgment using all of the relevant information available. These may include previous measurement data, experience, and knowledge of the behavior and properties of relevant materials and instruments, manufacture's specification, data provided in calibration reports and uncertainties assigned to reference data taken from handbooks. Broadly speaking, the uncertainty is either obtained from an outdoor source or obtained from an assumed distribution, such as the normal distribution, rectangular or triangular distributions indicated in table below.

Uncertainty Distributions	Normal	Rectangular	Triangular	U-Shape
Multi-plying Factor[(a)]	1/k[(b)]	1/√3	1/√6	1/√2

(a) standard uncertainty is determined as the product of the multiplying factor and the estimated range of variations in the measured quantity

(b) κ is the coverage factor

Table 15.1. Standard Uncertainty for Assumed Distribution

The combined standard uncertainty of the measurement result represents the estimated standard deviation of the result. It is obtained by combining the individual standard uncertainties of both Type A and Type B evaluation using the usual "root-sum-squares" (RSS) methods of combining standard deviations by taking the positive square root of the estimated variances.

Expanded uncertainty is a measure of uncertainty that defines an interval about the measurement result within which the measured value is confidently believed to lie. It is obtained by multiplying the combined standard uncertainty by a coverage factor. Typically, the coverage factor ranges from 2 to 3. Using a coverage factor allows the true value of a measured quantity to be specified with a defined probability within the specified uncertainty range. For purpose of this document, a coverage factor two is used, which corresponds to confidence interval of about 95 %. The DASY uncertainty Budget is shown in the following tables.

Error Description	Uncertainty Value (±%)	Probability Distribution	Divisor	Ci (1g)	Ci (10g)	Standard Uncertainty (1g)	Standard Uncertainty (10g)
Measurement System							
Probe Calibration	6.0	Normal	1	1	1	± 6.0 %	± 6.0 %
Axial Isotropy	4.7	Rectangular	√3	0.7	0.7	± 1.9 %	± 1.9 %
Hemispherical Isotropy	9.6	Rectangular	√3	0.7	0.7	± 3.9 %	± 3.9 %
Boundary Effects	1.0	Rectangular	√3	1	1	± 0.6 %	± 0.6 %
Linearity	4.7	Rectangular	√3	1	1	± 2.7 %	± 2.7 %
System Detection Limits	1.0	Rectangular	√3	1	1	± 0.6 %	± 0.6 %
Readout Electronics	0.3	Normal	1	1	1	± 0.3 %	± 0.3 %
Response Time	0.8	Rectangular	√3	1	1	± 0.5 %	± 0.5 %
Integration Time	2.6	Rectangular	√3	1	1	± 1.5 %	± 1.5 %
RF Ambient Noise	3.0	Rectangular	√3	1	1	± 1.7 %	± 1.7 %
RF Ambient Reflections	3.0	Rectangular	√3	1	1	± 1.7 %	± 1.7 %
Probe Positioner	0.4	Rectangular	√3	1	1	± 0.2 %	± 0.2 %
Probe Positioning	2.9	Rectangular	√3	1	1	± 1.7 %	± 1.7 %
Max. SAR Eval.	1.0	Rectangular	√3	1	1	± 0.6 %	± 0.6 %
Test Sample Related							
Device Positioning	2.9	Normal	1	1	1	± 2.9 %	± 2.9 %
Device Holder	3.6	Normal	1	1	1	± 3.6 %	± 3.6 %
Power Drift	5.0	Rectangular	√3	1	1	± 2.9 %	± 2.9 %
Phantom and Setup							
Phantom Uncertainty	4.0	Rectangular	√3	1	1	± 2.3 %	± 2.3 %
Liquid Conductivity (Target)	5.0	Rectangular	√3	0.64	0.43	± 1.8 %	± 1.2 %
Liquid Conductivity (Meas.)	2.5	Normal	1	0.64	0.43	± 1.6 %	± 1.1 %
Liquid Permittivity (Target)	5.0	Rectangular	√3	0.6	0.49	± 1.7 %	± 1.4 %
Liquid Permittivity (Meas.)	2.5	Normal	1	0.6	0.49	± 1.5 %	± 1.2 %
Combined Standard Uncertainty						± 11.0 %	± 10.8 %
Coverage Factor for 95 %						K=2	
Expanded Uncertainty						**± 22.0 %**	**± 21.5 %**

Table 15.2. Uncertainty Budget for frequency range 300 MHz to 3 GHz

Error Description	Uncertainty Value (±%)	Probability Distribution	Divisor	Ci (1g)	Ci (10g)	Standard Uncertainty (1g)	Standard Uncertainty (10g)
Measurement System							
Probe Calibration	6.55	Normal	1	1	1	± 6.55 %	± 6.55 %
Axial Isotropy	4.7	Rectangular	√3	0.7	0.7	± 1.9 %	± 1.9 %
Hemispherical Isotropy	9.6	Rectangular	√3	0.7	0.7	± 3.9 %	± 3.9 %
Boundary Effects	2.0	Rectangular	√3	1	1	± 1.2 %	± 1.2 %
Linearity	4.7	Rectangular	√3	1	1	± 2.7 %	± 2.7 %
System Detection Limits	1.0	Rectangular	√3	1	1	± 0.6 %	± 0.6 %
Readout Electronics	0.3	Normal	1	1	1	± 0.3 %	± 0.3 %
Response Time	0.8	Rectangular	√3	1	1	± 0.5 %	± 0.5 %
Integration Time	2.6	Rectangular	√3	1	1	± 1.5 %	± 1.5 %
RF Ambient Noise	3.0	Rectangular	√3	1	1	± 1.7 %	± 1.7 %
RF Ambient Reflections	3.0	Rectangular	√3	1	1	± 1.7 %	± 1.7 %
Probe Positioner	0.8	Rectangular	√3	1	1	± 0.5 %	± 0.5 %
Probe Positioning	9.9	Rectangular	√3	1	1	± 5.7 %	± 5.7 %
Max. SAR Eval.	4.0	Rectangular	√3	1	1	± 2.3 %	± 2.3 %
Test Sample Related							
Device Positioning	2.9	Normal	1	1	1	± 2.9 %	± 2.9 %
Device Holder	3.6	Normal	1	1	1	± 3.6 %	± 3.6 %
Power Drift	5.0	Rectangular	√3	1	1	± 2.9 %	± 2.9 %
Phantom and Setup							
Phantom Uncertainty	4.0	Rectangular	√3	1	1	± 2.3 %	± 2.3 %
Liquid Conductivity (Target)	5.0	Rectangular	√3	0.64	0.43	± 1.8 %	± 1.2 %
Liquid Conductivity (Meas.)	2.5	Normal	1	0.64	0.43	± 1.6 %	± 1.1 %
Liquid Permittivity (Target)	5.0	Rectangular	√3	0.6	0.49	± 1.7 %	± 1.4 %
Liquid Permittivity (Meas.)	2.5	Normal	1	0.6	0.49	± 1.5 %	± 1.2 %
Combined Standard Uncertainty						± 12.8 %	± 12.6 %
Coverage Factor for 95 %						K=2	
Expanded Uncertainty						**± 25.6 %**	**± 25.2 %**

Table 15.3. Uncertainty Budget for frequency range 3 GHz to 6 GHz

16. References

[1] FCC 47 CFR Part 2 “Frequency Allocations and Radio Treaty Matters; General Rules and Regulations”

[2] ANSI/IEEE Std. C95.1-1992, “IEEE Standard for Safety Levels with Respect to Human Exposure to Radio Frequency Electromagnetic Fields, 3 kHz to 300 GHz”, September 1992

[3] IEEE Std. 1528-2003, “Recommended Practice for Determining the Peak Spatial-Average Specific Absorption Rate (SAR) in the Human Head from Wireless Communications Devices: Measurement Techniques”, December 2003

[4] SPEAG DASY System Handbook

[5] FCC KDB 248227 D01 v01r02, “SAR Measurement Procedures for 802.11 a/b/g Transmitters”, May 2007

[6] FCC KDB 447498 D01 v05r02, “Mobile and Portable Device RF Exposure Procedures and Equipment Authorization Policies”, Feb 2014

[7] FCC KDB 865664 D01 v01r03, "SAR Measurement Requirements for 100 MHz to 6 GHz", Feb 2014.

[8] FCC KDB 865664 D02 v01r01, “RF Exposure Compliance Reporting and Documentation Considerations” May 2013.