PIN Pad 791
Programmer's Manual

Personal ID Number Pad

With EMV Level 2 Transaction Capabilities

(PCI POS-A Specification)

PM 0103-U

Revision 06

2015-04-20

PP791
Uniform

FEDERAL COMMUNICATIONS COMMISSION STATEMENT

This device complies with Part 15 of the FCC Rules. Operation is subject to the following two conditions: (1) this device may not cause harmful interference, and (2) this device must accept any interference received, including interference that may cause undesired operation.

NOTE

This equipment has been tested and found to comply with the limits for a Class B digital device, pursuant to Part 15 of the FCC Rules. These limits are designed to provide reasonable protection against harmful interference when the equipment is operated in a commercial environment. This equipment generates, uses, and can radiate radio frequency energy and, if not installed and used in accordance with the instruction manual, may cause harmful interference to radio communications. Operation of this equipment in a residential area is likely to cause harmful interference in which case the user will be required to correct the interference at his own expense.

You are cautioned that any change or modifications to the equipment not expressly approve by the party responsible for compliance could void your authority to operate such equipment.

FCC RF Radiation Exposure Statement:

1. This Transmitter must not be co-located or operating in conjunction with any other antenna or transmitter.
2. This equipment complies with FCC RF radiation exposure limits set forth for an uncontrolled environment. This equipment should be installed and operated with a minimum distance of 20 centimeters between the radiator and your body.

NOTICE

The issuer of this manual has made every effort to provide accurate information. The issuer will not be held liable for any technical and editorial omission or errors made herein; nor for incidental consequential damages resulting from the furnishing, performance or use of this material. This document contains proprietary information that is protected by copyright. All rights are reserved. No part of this document may be photocopied, reproduced, or translated without the prior written consent of the issuer. The information provided in this manual is subject to change without notice.

第十二條 經型式認證合格之低功率射頻電機，非經許可，公司、商號或使用者均不得擅自變更頻率、 大功率或變更原設計之特性及功能。
第十四條 低功率射頻電機之使用不得影響飛航安全及干擾合法通信；經發現有干擾現象時，應立即停用，並改善至無干擾時方得繼續使用。
前項合法通信，指依電信法規定作業之無線電通信。低功率射頻電機須忍受合法通信或工業、科學及醫療用電波輻射性電機設備之干擾。

AGENCY APPROVED

- FCC class B
- CE class B

WARRANTY

This product is served under one-year warranty to the original purchaser. Within the warranty period, merchandise found to be defective would be repaired or replaced. This warranty applies to the products only under the normal use of the original purchaser, and in no circumstances covers incidental or consequential damages through consumers' misuse or modification of the products.

Document History

Document Version	Apply to FW version	Change
01	PP791: 10A.01 SysMgr: 10A.01	First Release
02	PP791: 10A.03 SysMgr: 10A.03	◆ Modify the description of I17 command. ◆ Remove "All" type of saver screen setting in BB command. ◆ Add a error code in 71 command. ◆ Add a error code in 91 command.
03	PP791: 10A.05 SysMgr: 10A.04	◆ Add a error code in 02 command. ◆ Add a error code in 91 command.
04	PP791: 10A.06 SysMgr: 10A.05	◆ Add message JA for set boot logo. ◆ EMV Level 2 transaction messages for PCD implementation done.
05	PP791: 10A.06 SysMgr: 10A.05	◆ Add Contactless EMV transaction description in EMV Level 2 transaction messages. ◆ Message T19, T23 update message flow. ◆ Add PCD MiFare Message. ◆ Split EMV transaction chapter into two, Contact and Contactless EMV transaction. ◆ Remove I10 command. ◆ Add a new description of WIFI/BT setting menu.
06	PP791: 10A.09 SysMgr: 10A.08	◆ Add NCC Compliance and Advisory Statement.

Table of Contents

Section 1 Introduction 11
PIN Pad components 11
Display 12
Keypad 12
Communication Interface 12
Magnetic and Smart Card reader 12
Smart card and Security Access Module (SAM) interfaces 13
Tamper Evidence and Tamper Responsive 13
Section 2 System Manager 14
Introduction 14
Security management 14
Main menu of system manager 15
Prepare downloading 15
"Download" menu 16
"Date & Time" menu 17
"Setting" menu17
"System Info" menu 18
"Self Test" menu 18
"Change Password" menu 19
Section 3 PP791 Setup & Diagnostic Menu 20
Call up Diagnostic Menu 20
Diagnostic Menu 1: HW Tests 20
Diagnostic Menu 2: Display Info 21
Diagnostic Menu 3: Setup COM Port 21
Diagnostic Menu 4: Set LCD Backlight 22
Diagnostic Menu 5: Logo Setup 23
Diagnostic Menu 6: Setup Password 23
Diagnostic Menu 7: Set Keypad Beep 23
About USB virtual COM port (only applied on USB version) 24
Call up Interface Setting Menu 24
Interface Setting Menu 1: COMM. Interface Switch 24
Interface Setting Menu 2: WIFI Setting 24
Interface Setting 3: Bluetooth Setting 25
Interface Setting Menu 4: Status 25
Section 4 Message format 26
Notation Conventions 26
Control Codes 26
Message frame summary 27

Message type 27
Time-out 27
Transmission Error 27
Packet Error 27
Section 5 Administration and maintenance messages 28
Message 02 Load Master Key 28
Symmetric Keys Loading Authentication 32
Message 04 Check Master Key 34
Message 05 Load Serial Number 36
Message 06 Get Serial Number 37
Message 07 Test DES Implementation 38
Message 08 Select Master Key 39
Message 09 Communication Test 40
Message 11 PIN Pad Device Connection Test 42
Message 12 Select Prompt Language 43
Message 13 Adjust COM1 Baud Rate (RS-232 version only) 45
Message 14 Enable/Disable Timer Display 47
Message 15 Adjust LCD Backlight Level 49
Message 16 Remote self-test request 50
Message 17 Request random number 51
Message 18 Set PIN pad system time 52
Message 19 Query Firmware Version 56
Message 1C Query Hardware Capability 58
Message 1F Query Usable Prompt Table 59
Message 1J Turn ON/OFF LCD Backlight 61
Message 1K Turn ON/OFF LCD Power-save mode 63
Message 1M Setup Keypad Beeper 65
Section 6 Contact EMV Level 2 transaction messages 67
Message T01 Terminal Configuration Setup 69
Message T02 Terminal Configuration Setup Response 72
Message T03 Certification Authority Public Key Setup 73
Message T04 Certification Authority Public Key Setup Response 75
Message T05 EMV Application Configuration Setup 76
Message T06 EMV Application Configuration Setup Response 80
Message T07 Data Format Table Setup 81
Message T08 Data Format Table Setup Response 83
Message T09 EMV Config Data Query Message 84
Message T0A Response of EMV Config Data Query Message 85
Message T0B Delete EMV Configuration Data Message. 86
Message T0C Response of Delete EMV Configuration Data Message. 87

Message T11 Application Select 88
Message T12 Application Select Response 89
Message T13 Application Select Next 90
Message T15 Start Transaction 91
Message T16 Start Transaction Response 93
Message T17 Send Online Authorized Code 95
Message T19 Send Issuer Script Command 97
Message T1D Transaction Data loading 99
Message T1E Transaction Data loading Response 101
Message T20 Send Issuer Script Command Response 102
Message T21 Get Transaction Result's Data 103
Message T22 Get Transaction Result's Data Response 104
Message T23 Erase EMV Transaction Log. 105
Message T1C Terminal Cancel Transaction 106
Message T25 Get Batch Data 107
Message T26 Response of Get Batch Data message 109
Message T27 Get Online authorization Data 110
Message T28 Response of Get Online authorization Data message 111
Message T29 Get Reversal Data 112
Message T2A Response of Get Reversal Data message 113
Overall Contact EMV Level 2 transaction flow reference 114
Ref. 1 Packet command flow for transaction with offline 114
Ref. 2 Packet command flow for transaction with online 114
Ref. 3 Packet command flow for transaction with MSR. 115
Ref. 4 Packet command flow for transaction with online and Issuer Script command Processing 116
Ref. 5 Packet command flow for first EMV application is blocked 116
Section 7 Contactless EMV Level 2 transaction messages 118
Message T51 PCD Terminal Configuration Setup 120
Message T52 PCD Terminal Configuration Setup Response 123
Message T53 PCD Certification Authority Public Key Setup 124
Message T54 PCD Certification Authority Public Key Setup Response 126
Message T55 PCD Application Configuration Setup 127
Message T56 PCD Application Configuration Setup Response 131
Message T59 PCD Config Data Query Message 132
Message T5A Response of PCD Config Data Query Message 133
Message T5B Delete PCD Configuration Data Message. 134
Message T5C Response of Delete PCD Configuration Data Message. 135
Message T5D PCD House Keeping Message. 136
Message T5E Response of PCD House Keeping Message. 137

Message T61 Start Transaction 138
Message T62 Start Transaction Response 140
Message T63 Get Transaction Result's Data 141
Message T64 Get Transaction Result's Data Response 142
Message T65 Get Online authorization Data 143
Message T66 Response of Get Online authorization Data message 144
Message T6C Cancel PCD Transaction 145
Message T71 Send PCD Online Authorized Code 146
Message T73 Send Issuer Script Command 148
Message T75 Revocation List Setup 149
Message T76 Revocation List Setup Response 150
Message T77 Exception List Setup 151
Message T78 Exception List Setup Response 152
Overall Contactless EMV Level 2 transaction flow reference 153
Ref. 1 Packet command flow for transaction with offline approval 153
Ref. 2 Packet command flow for transaction with online approval 154
Section 8 MIFARE card messages 155
Message P01 Enable/Disable MIFARE 156
Message P02 Query MIFARE Presence 158
Message P03 MIFARE Anti-collision 160
Message P04 MIFARE Selection 162
Message P05 MIFARE Classic/Ultralight Card Activation 164
Message P06 MIFARE Classic/Ultralight Card HALT 166
Message P07 MIFARE Classic Card Authentication 168
Message P08 MIFARE Ultralight Card Read Page 170
Message P09 MIFARE Ultralight Card Write Page 172
Message P10 MIFARE Classic/Ultralight Card Read Block 174
Message P11 MIFARE Classic/Ultralight Card Write Block 176
Message P12 MIFARE Classic/Ultralight Card Read Sector 178
Message P13 MIFARE Classic/Ultralight Card Write Sector 180
Message P14 MIFARE Classic Card Value Operation 182
Message P15 Load MIFARE key 184
Message P16 Identify MIFARE Card Type 186
Message P17 MIFARE DESfire Card Activation 188
Message P18 MIFARE DESfire Card Deselect 190
Message P19 I/O to MIFARE card with APDU format 192
Message P20 I/O to MIFARE card for block data exchange 194
Overall MIFARE operation flow reference 196
Ref. 1 Activate and authenticate for MIFARE classic card. 196
Ref. 2 The quick method for activating classic card. 197

Ref. 3 Activate and authenticate for MIFARE Ultralight card. 198
Ref. 4 The quick method for activating Ultralight card. 199
Ref. 5 Activating for DESFire card 200

Section 9 Online transaction messages with Master/Session Keys (MK/SK) 201

Message 70 PIN entry request (MK/SK) 201
Message 71 Encrypted PIN Block Response 204
Message 72 PIN Entry Cancel 206
Message Z0 Move Display Cursor 207
Message Z1 Reset State 208
Message Z2 Display String 209
Message Z3 Display Line Prompts 212
Z2 / Z3 Authenticated mode with fixed prompt 215
Z2 / Z3 PIN entry mode with fixed prompt 215
Message Z2 Display String with Authentication Code 216
Message Z3 Display Line Prompts with Authentication Code 218
Example to use Z2 / Z3 with Authencation Code. 220
Message Z42 Read Key Code 221
Message Z43 Read Key Code Response 222
Message Z50 String Entry Request 223
Message Z51 String Entry Response 225
Message Z60 PIN entry request with external prompt (MK/SK) 226
Message Z62 PIN entry request with customized prompt (MK/SK) 228
Message Z66 Message Authentication Code (MAC) Request 231
Message Z67 Message Authentication Code (MAC) Response 234
Message Z7 Turn ON/OFF CANCEL Message Display 236
Message Z8 Set Idle Prompt 237

Section 10 Online transaction messages with Derived Unique Key per Transaction (DUKPT) 238

Message 60 Pre-authorization PIN Entry Request 239
Message 62 Pre-authorization Amount Authorization Request 241
Message 63 Pre-authorization Amount Authorization Response 242
Message 70 PIN Entry Request (DUKPT) 243
Message 71 Encrypted PIN Block Response 245
Message 72 PIN Entry Cancel 246
Message Z60 PIN entry request with external prompt (DUKPT) 247
Message Z62 PIN entry request with customized prompt (DUKPT) 249
Message 76 PIN Entry Test Request 252
Message 7A KSN output format 253
Message 90 Load First Initial Key Request 254
Message 91 Load Initial Key Response 256

Message 94 Load Second Initial Key Request 257
Message 96 Select Active Key Set 259
Section 11 ICC / SAM / Magnetic stripe card manipulating messages 260
Message I00 Query Primary Smart Card Presence 261
Message I01 Primary Smart Card Cold Reset 262
Message I02 Primary Smart Card ATR Response 263
Message I04 Primary Smart Card Deactivate 264
Message I06 Primary Smart Card C-APDU 265
Message I07 Primary Smart Card R-APDU 266
Message I08 Smart Card Offline PIN Verification (EMV) 267
Message I09 Response of Smart Card Offline PIN Verification (EMV) 269
Message I0F Error Codes 270
Message I11 SAM slot Cold Reset 271
Message I12 SAM slot ATR Response 272
Message I14 SAM slot Card Deactivate 273
Message I15 SAM Select Interface 274
Message I16 SAM slot C-APDU 275
Message I17 SAM slot R-APDU 276
Message Q1 Display SWIPE CARD message 277
Message Q2 Transaction Completed 278
Message Q3 Ignore Card Swipe 279
Message Q4 Enable/Disable Magnetic Card Reader 280
Message Q5 Set MSR Retry Count 281
Message Q6 MSR Operation Control 282
Message Q7 MSR Mode Query 283
Message Q8 Display TAP CARD message 284
Message Q9 Display SWIPE / TAP CARD message 285
Message QA Enable/Disable Contactless Card Reader 286
Message QB MSR Device (Not) Always Detection 287
Message QC Contactless module (Not) Always Detection 288
Message QD Contactless Card Data with/without Start/End sentinels 289
Message 81 MSR Card Data 290
Message 83 Contact-less Card Data 292
Section 12 Display functionality messages 293
Message B1 Font Size Selection 294
Message B3 Font Color (Foreground / Backgroud) Selection 295
Message BB Screen Saver Setting 296
Message BD Enable / Disable Screen Saver 298
Message BF Screen Saver Preview / Stop Preview 299
Section 13 JPEG File Operation messages 300

Message J0 JPEG File Table Initialization 301
Message J1 Query JPEG File Table 302
Message J2 Select JPEG File 304
Message J3 Delete JPEG File 306
Message J4 Download JPEG File 308
Message J5 Upload JPEG File 310
Message J6 Play JPEG File 312
Message J7 Set JPEG File As Idle Prompt 313
Message J8 Enable/Disable Idle Logo Functionality 314
Message J9 Show JPEG File 315
Message JA Set Boot Logo 317
Appendix A Key management 319
Appendix B PIN Block Format 327
ANSI x9.8 format (MK/SK, DUKPT, and Offline clear text PIN entry) 327
EMV Level 2 format (Offline enciphered PIN entry) 328
Appendix C Features and specification 329
Appendix D Tag Definition on EMV data 330
Appendix E Minimum Set of EMV Configuration Data 333
Appendix F PCD Tag Definition on EMV data 334
Appendix G PCD Minimum Set of EMV Configuration Data 337
Appendix H Fixed Prompts for Z2/Z3 authenticated mode 339
Appendix I Fixed Prompts for Z2/Z3 PIN entry mode 341

Section 1 Introduction

PIN Pad 791 (PP791) provides a secure and friendly way of obtaining customer Personal Identification Numbers (PIN), dealing with smart card offline transaction specified in EMV Level 2 book 3 and book4.

PP791 can deal PIN entry and transaction in following ways:

1. As a PIN Entry Device (PED): PP791 can encrypt ANSI X9.8 standard PIN block by DES and TDES algorithm, using master/session key or DUKPT as key management scheme. In addition, it can encrypt EMV Level 2 specified PIN block by DES or RSA algorithm.
2. As an EMV Lv2 mini terminal: PP791 can handle most of the EMV Level 2 transaction flow, especially card holder verification (CHV) process, and send transaction result to its host machine. With properly development tool, system integrators can develop their customized application for PP791, use its internal function calls to build their own transaction flow. PP791 will secure the sensitive data by restricting the memory space that can be accessed by customized application program.

PIN Pad components

This PIN Pad is composed of the following components:

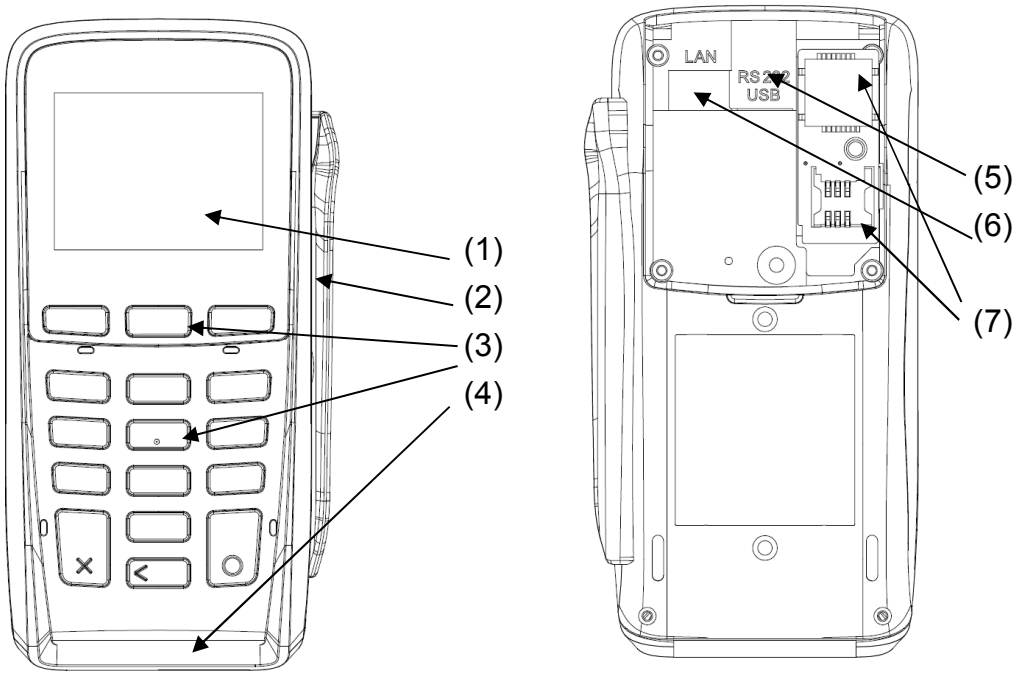

(1). LCD display with 320 * 240 resolution.

(2). Magnetic stripe reader swiping slot.

(3). 13 key telephone-style keypad and 3 function keys.

(4). Smart card reader inserting slot.

(5). Primary communication interface (RS232 or USB), with protection cover

(6). Ethernet LAN Port

(7). Three secure access module (SAM) slots, with protection cover.

Display

The 320*240 pixels TFT LCD is capable of displaying characters and graphic. For displaying characters, It provides ASCII 8*8 character set for range 0x20~0x7E, 8*16, 16*16, 16*24 character set for range 0x20~0xFF.

Keypad

The PIN Pad uses its 16 keys to accept commands. For each key pressed, there will be a short beep to confirm that key is accepted. The following diagram shows layout of the keys.

<table>
<tr><td>1</td><td>2</td><td>3</td></tr>
<tr><td>4</td><td>5</td><td>6</td></tr>
<tr><td>7</td><td>8</td><td>9</td></tr>
<tr><td rowspan="2">CAN</td><td>0</td><td rowspan="2">ENTER</td></tr>
<tr><td>CLR</td></tr>
</table>

<table>
<tr><td>F1</td><td>F2</td><td>F3</td></tr>
</table>

[CAN] (Cancel) button will abort PIN entering transactions or magnetic card swiping actions, and cause PP791 back to idle state.

[CLR] (Clear) button will reset PIN input when doing PIN entry transactions.

[F1] The F1 button is treated as "move up" when dealing with function menu (such as diagnostic mode or EMV Lv2 transaction menu). With customized application, system integrators can define its usage by themselves.

[F2] The F2 button is treated as "go back" when dealing with function menu. With customized application, system integrators can define its usage by themselves.

[F3] The F3 button is treated as "move down" when dealing with function menu. With customized application, system integrators can define its usage by themselves.

Communication Interface

PP791 has two communication interfaces:

1. A detachable 9-pin Mini-DIN interface which can be used to connect proprietary RS232/USB auto selecting cable for power feeding and data exchange with host device.
2. A RJ-45 Ethernet jack for TCP/IP communication.

Magnetic and Smart Card reader

The smart card reader of PP791 can accept EMV Level 2 compatible smart cards for offline transaction,

or exchange APDU packets with EMV Level 1 compatible smart cards via ICC-related commands. It also reads ISO 7811 compatible magnetic cards for legacy online debit / credit card operation.

Smart card and Security Access Module (SAM) interfaces

PP791 provides three SAM interfaces (optional) for customer usage. System Integrators can use PP791 internal API or SAM-related commands to switch between different slots and exchange APDU.

Tamper Evidence and Tamper Responsive

PP791 is compatible with "Payment Card Industry (PCI) POS PIN entry device security requirement" version 3.0. Per this requirement, PP791 will detect tampering attempts by its multiple security design. If tamper is detected, security subsystem will cause the automatic and immediate erasure of all secret information contained in it. Such as master keys, DUKPT key, personalization information and so on. **Without security information PP791 will not work anymore. A user should contact system integrator or vendor representative for RMA when a PP791 was tampered.**

Section 2 System Manager

Introduction

The system manager is a resident process launched automatically when PP791 boot up. It will manage the download and execution of other application, do basic settings, and self tests.

After system booted up and the startup application is launched, user can press "ENT + 1" (press ENT key and '1' at the same time), then input dual passwords of system manager to enter system manager menu. (The default password will be sent to legal user by secure method).

NOTE 1: Enter system manager will terminate the current application.

NOTE 2: System manager will exit and re-launch startup application if no input over 60 seconds.

Security management

1. **Personalization and tamper detection**

   Each PP791 is "personalized" (create an AES key randomly for sensitive data protection) before delivery. Every time PP791 boot up, system manager will check the personalization status and existence of this AES key. If device is tampered, security mechanism will erase the AES key and invalid personalization status, then reboot. After reboot, system manager will see the change and show following message (tamper evidence mode):

   "System has tampered, you shall release it before you can normally use."

   In this situation, user can press "ENT + 1" (press ENT key and '1' at the same time), then input dual passwords of system manager to exit tamper evidence mode.

   When exiting tamper evidence mode, PP791 will be re-personalized. All keys will be erased.

2. **Certificate management**

   Every application in the PP791 should have digital signature (sha256 hash encrypted by 2048bit RSA key) The system process (system manager and PP791 appl.,) will be verified by a fixed system certificate resident in system kernel, and user applications will be verified by user-loaded certificates, which is managed by system manager.

   The certificate hierarchy of PP791 contains:

   Vendor certificate: This certificate is created by user (i.e. system integrator or bank), it verifies user applications when downloading application and launching application.

   Intermediate certificate: This certificate is issued by intermediate CA, it verifies vendor certificate every time when system manager starts.

   Root certificate: This certificate is issued by root CA, by default, PP791 have a root certificate resident in system kernel. But users can load their own root certificate along with intermediate and vendor certificate in the same trust chain. It verifies intermediate certificate every time when system manager starts.

Main menu of system manager

DISPLAY	ACTION
Key Injection	Do clear text key load.
Download	Do firmware updates.
Date & Time	Adjust system date, time, and time zone.
Setting	Set up system manager options.
System Info	Show firmware version, TCP/IP settings, and certificate names.
Self Test	Do basical hardware test.
Change Password	Change system manager password.

Prepare downloading

User has to use system manager to download applications, graphics, or update system components. There are two methods to download: via TCP/IP (need to a FTP server, and correctly setup IP address and FTP config scripts by "Setting" menu).

Prepare FTP server:

User can establish a FTP server on any computer that already connected to LAN and have valid IP address. The server should have a directory (i.e. **ftproot/pub**) that contains following directory (case sensitive):

1. **certs**: Contains certificate files with pre-defined names: "**appl_vendor.crt**" for vendor certificate; "**appl_inter.crt**" for intermediate certificate; "**custom_root.crt**" for customized root certificate if needed; "**certificates.tar.gz**" for package download if needed.
2. **graphics**: Contains a "**graphics.lst**" file and picture packages in **tar.gz** format.
3. **system**: Contains system update files provided by UIC.

The list files (graphics.lst) are pure text file, with one name per line:

```
Graph_01
Graph_02
.....
```

When PP791 reads "**Graph_01**", in graphics.lst, it will go to server to find "**Graph_01.tar.gz**".

Prepare FTP config script:

PP791 can manage multiple FTP settings by selecting config script. Each config script should have the extension name "**.cfg**", with following format:

host=xxx.xxx.xxx.xxx	IP address of FTP server.
port=21	FTP port number.
user=anonymous	FTP login name.

`password=xxxxxx`	FTP login password.
`path=/pub`	Directory name that contains **appls**, **certs**, **graphics** and **system**.

PP791 will read an "**`ftp_setting_file`**" which contains one ftp config script name, and use it as default FTP setting. The factory default of ftp_setting_file is:

`ftp_site1.cfg`

(As a result, system manager will read server IP address, port, username and password from this file).

The FTP setting file and config scripts can by edited by system manager.

"Download" menu

DISPLAY	ACTION
`Download System`	Select download method; Then show system update menu.
`Download Graphics`	Select download method; Then show graphics download menu.
`Download Certs`	Select download method; Then show certificates download menu

"Download System" menu:

DISPLAY	ACTION
`PIN Pad 791`	Update PP791 application.
`System Manager`	Update System Manager.
`Linux Kernel`	Update Linux kernel of PP791.
`Root Filesystem`	Update system files of PP791.

Note: these update files will be signed by UIC and verified by built-in UIC system certificate.

"Download Graphics" menu:

The graphic package (**`.tar.gz`** format) should have a subdirectory:

`jpeg`: JPEG pictures (Refer to Jxx commands of PP791)

DISPLAY	ACTION
`Download Graphics`	Display graphic package names from "graphics.lst" resident in PP791. Use [F1] ~ [F3] to navigate, [ENT] to start download graphic package. If download success, system manager will copy graphics in the package file to system graphics directory.
`Download Graphics List`	Download "graphics.lst" from server.

"Download Certs" menu:

DISPLAY	ACTION
Download Vendor Cert.	Download "appl_vendor.crt"
Download Intermediate Cert.	Download "appl_inter.crt"
View current cert. CN	View CN (common name) of current intermediate and vendor certificate.
Lock/Unlock Cert. CN	This option , if enabled, will cause system manager to check the CN (common name) field of newly downloaded certificate; if new CN is different than old one, system manager will reject this certificate.

"Date & Time" menu

DISPLAY	ACTION
Current date/time	Display current time zone, Current RTC time (UTC). Current Local time.
Set time zone	1. Enter the name of local time zone. (3~6 bytes) 2. Input the time offsets from UTC. (use [F1] to add minus sign) 3. Enter the name of Daylight Saving Time (DST) or press [CAN] to skip the related settings of DST. 4. Input the time offsets of DST from UTC. 5. Enter the start date and time of DST. 6. Enter the date and time to set the end of DST.
Set date/time	1. Enter year, month, day, hour (24h format), minute, second. 2. Press [ENT] to set time, or [CAN] to cancel.

"Setting" menu

DISPLAY	ACTION
Set DHCP / IP	Bring up sub menu of basic TCP/IP settings **[Set DHCP]** Enable or disable DHCP client of PP791. This setting will effect after reboot. **[Set Local IP]** Set fixed IP address of PP791 if DHCP disabled. **[Set Gateway IP]**

	Set gateway IP address of PP791 if DHCP disabled. **[Set Subnet Mask]** Set subnet mask of PP791 if DHCP disabled. **[Set DNS Server]** Set DNS server address of PP791 if DHCP disabled.
Set Console	Enable or disable linux command console.
Set FTP	**[Set FTP Server]** Set default FTP server IP address and save to detault FTP config script when user selected "Save all setting". **[Select FTP script]** System manager will show a list of FTP config scripts resident in PP791, use [F1] ~ [F3] to navigate, and [ENT] to select one as defaut FTP config script. **NOTE**: The settings in the script will take effect immediately.
Set Leave Before Run Appl	If this option enabled, system manager will leave interactive menu before run application.
Display all setting	Display current value of each "Setting" menu.
Save all setting?	Save new settings.

"System Info" menu

DISPLAY	ACTION
Kernel	PP791 Linux kernel version.
RFS	PP791 root file system version.
SysMgr	PP791 system manager version.
PP791	PP791 appication version.
Serial#	Serial number of this device.
MAC	Ethernet MAC address of this device.
IP Addr	Current IP address of this device.

After 10 seconds passed or user press any key, PP791 will show the certificate information:

(The certificate info has 3 pages: for vendor, intermediate, and root certificate).

DISPLAY	ACTION
Cert. CN	"Common Name" field of certificate
Cert. Hash (partial)	Most significant 4 bytes of the SHA-1 hash of this certificate.

"Self Test" menu

DISPLAY	ACTION
Display Test	Display black screen, then display test string on LCD.
Keypad Test	Display keypad input on LCD, press [CAN] to exit.
MSR Test	Test MSR swipe; the PAN of payment track will be partially masked.
ICC Test	Test smart card powerup and display its ATR.
RFID Test	Test tap for RFID credit cards such as visa wave and PayPass; the PAN of payment track will be partially masked.
COM1 Test	Select baud rate, then PP791 will send a test pattern thru COM1. User should echo this test pattern. PP791 will show the compare result.
TCP Test	Enter any IP address, PP791 will ping 4 times to see if network is accessable.

"Change Password" menu

DISPLAY	ACTION
Change Password 1	Change 1st password of system manager.
Change Password 2	Change 2nd password of system manager.

Section 3 PP791 Setup & Diagnostic Menu

Call up Diagnostic Menu

Press function key **[CLR] + [3]** (quickly press '3' after [CLR] released) of PP791 will call up diagnostic menu when PP791 in idle state. The default 2 passwords for diagnostic menu are "87806799" (both passwords)

DISPLAY	ACTION
(Idle prompt)	Power on. Press [CLR]+[3]
Password 1?	Input first setup password and press [ENTER]
Password 2?	Input second setup password and press [ENTER]
HW Tests **Display Info** **Setup COM Port** **Set LCD Backlight** **Logo Setup** **Update Password** **Set Keypad Beep**	Use [F1] ,[F3] to scroll up and down. [F2] to go back. [ENTER] to execute.

Diagnostic Menu 1: HW Tests

DISPLAY	ACTION
Display Test	Display two pages of test pattern: First page is turn on all pixels to check if there are any dot damage. Press any key or wait 10 sec to continue. Second page shows PP791 character sets. Press any key or wait 5 sec to leave.
Keypad Test	PP791 will echo user's input key at line 2. Press [CAN] to leave this test.
MSR Test	PP791 will show "**MSR TEST –SWIPE**" on LCD and wait for user to swipe any magnetic stripe card. After card swiped, a submenu will displayed to let user check track 1,2,3 independently.
ICC Test	Insert an EMV Lv1 compatible smart card into primary card slot, and then select this function. PP791 will display its ATR string on LCD for check.

Diagnostic Menu 2: Display Info

DISPLAY	ACTION
Show COM Param.	Display current COM port setting on PP791. COM1: Primary interface (if primary interface is USB, the value will be 9600, N, 8, 1)
Show SerialNum	Display current serial number. Refer to message 06.
Show Version	Display current firmware version
SENSOR STATUS	Display the sensor setting information

Diagnostic Menu 3: Setup COM Port

DISPLAY	ACTION
Set COM1 Param	A sub menu will show up: **Set Baudrate** **Set Mode** Enter into "Set Baudrate" to set COM1 baud rate Press keypad to set baud rate: '1' = 1200bps '2' = 2400bps '3' = 4800bps '4' = 9600bps '5' = 19200bps '6' = 38400bps '7' = 57600bps '8' = 115200bps

Set COM1 Param **(Continued)**	Enter into "Set Mode" to set COM1 operation mode Press keypad to set COM1 operation mode: '1' = '8', 'N', '1' (8-bit data length, none parity, 1 stop bit) '2' = '7', 'E', '1' (8-bit data length, even parity, 1 stop bit) '3' = '7', 'O', '1' (8-bit data length, odd parity, 1 stop bit) '4' = '8', 'N', '1' with handshake '5' = '7', 'E', '1' with handshake '6' = '7', 'O', '1' with handshake The COM1 on PP791 supports three handshake modes: 1. RTS flow control 2. XON-XOFF flow control 3. RTS/XON-XOFF flow control The default parameter of COM1 on PP791 is "9600bps, none parity, 8 data bits, 1 stop bit". User can use command message 10 to change this setting remotely.

Diagnostic Menu 4: Set LCD Backlight

DISPLAY	ACTION
Light Always ON **Light Auto OFF**	First item will set LCD backlight always on. This setting is the same with message Z9 with parameter 1. Second item will set PP791 enable its backlight in following situation: a. Any key is pressed. b. PIN entry command is working c. Selecting Menu. And backlight will automatically turn off after 3 seconds of above operation ends.

Diagnostic Menu 5: Logo Setup

DISPLAY	ACTION
Idle Logo ON/OFF	Enable or disable graphical idle logo. (The logo image is defined by command J7)

Diagnostic Menu 6: Setup Password

DISPLAY	ACTION
Update Password1	PP791 will show following message: **NEW PASSWD** ******** **CONFIRM PASSWD** ******** User should press 1st password, press [ENTER] to enter 2nd password, then press [ENTER] to finish input. If two passwords mismatch the password will not be changed. Password must have 6 characters at least, with maximum 16 characters.
Update Password2	PP791 will show following message: **NEW PASSWD** ******** **CONFIRM PASSWD** ******** (Usage is the same with password 1.)

Diagnostic Menu 7: Set Keypad Beep

DISPLAY	ACTION
Beep ON	Key press with beep.
Beep OFF	Key press without beep.

About USB virtual COM port (only applied on USB version)

PP791 USB version will identify itself as a virtual COM port for Windows 2000/XP device enumeration. When Windows requests PP791's device driver, please provide a directory name which contains PP791 USB driver, and answer "proceed anyway" when prompted with driver certification questions.

The baud rate of PP791 virtual COM port is determined by the application program. When AP calls Windows API to open COM port, PP791 and Windows virtual COM port driver will adjust its baud rate according to the parameters sent to API function.

Call up Interface Setting Menu

In a WIFI/Bluetooth capable PP791, press function key **[CLR] + [F2]** (quickly press 'F2' after [CLR] released) of PP791 will call up interface setting menu when PP791 in idle state.

DISPLAY	ACTION
(Idle prompt)	Power on. Press [CLR]+[F2]
COMM. Interface Switch **WIFI Setting** **Bluetooth Setting** **Status**	Use [F1] ,[F3] to scroll up and down. [F2] to go back. [ENTER] to execute. Interface Setting

Interface Setting Menu 1: COMM. Interface Switch

DISPLAY	ACTION
COM	PP791 communicate with Terminal via COM.
WIFI	PP791 communicate with Terminal via WIFI.
Bluetooth	PP791 communicate with Terminal via Bluetooth.
Use Default	Use Default interface which is COM.

Interface Setting Menu 2: WIFI Setting

DISPLAY	ACTION
Discover Server	PP791 will scan all available server on the same wireless lan (Refer to PIN PAD 791 Multicast Programmer's Manual)and show the result on the screen. As user choose a server, the configuration(Server IP and Server Port) of Server will be set into PP791, and then user can use "Connect" option to connect to the server.
Set Server IP	Manually set the IP address of Server which you want to connect.

Set Server Port	Manually set the Port number of Server which you want to connect.
Connect	Connect to the Server.
Disconnect	Disconnect with the Server.
Status	Display the WIFI setting information

Interface Setting 3: Bluetooth Setting

DISPLAY	ACTION
Choose Devices	1. Scan Devices: Get the BT Device name, and MAC address. 2. Choose Devices: Input the 0~ 9 to choose the BT device.
PIN Setup	1. Read Device PIN: Default PIN is "123456" Change Device PIN
Connect Device	Connect to BT Device
Disconnect Device	Disconnect with BT Device

Interface Setting Menu 4: Status

Section 4 Message format

This chapter details the format of messages exchanged between the host and PIN Pad.

Notation Conventions

The following conventions are used to make the description of messages more readable:

Control Codes

Control codes (non-displayable codes) are represented by two to three capital letters enclosed in angled brackets "<>". This PIN Pad uses 12 control codes in total. Their actual code, when referenced, is represented by two hex digits enclosed in angled brackets, <0F> for example. The following table lists their usage and value in hex codes.

CODE	HEX VALUE	USAGE
STX	02	Denotes the beginning of a message frame
ETX	03	Denotes the ending of a message frame
EOT	04	Indicates communication session terminated
ACK	06	Acknowledge of message received
SI	0F	Denotes the beginning of a message frame
SO	0E	Denotes the ending of a message frame
NAK	15	Indicates invalid message received
SUB	1A	Message parameter follows
FS	1C	Field separator
GS	1D	Message ID follows
DC1	11	Used for Z2 message, enable inverse mode.
DC2	12	Used for Z2 message, disable inverse mode.

[LRC]

Each message frame transmitted is followed by an LRC byte to detect communication error. This byte should be regarded as part of the message frame but comes after the ending delimiter character. [LRC] is used to represents this LRC byte in describing message frames.

LRC is calculated as an XORed value of every byte after start code in the message frame except itself, that means from the next byte of <STX> or <SI> through the <ETX> or <SO> byte.

[item]

A descriptive item name enclosed in bracket denotes a string or data byte that has no fixed value.

Message frame summary

Data exchanged between PIN Pad and host computer are grouped into "message frames". Each message frame has one of the two frame formats listed below:

- `<STX>[message ID][data]<ETX>[LRC]`
- `<SI>[message ID][data]<SO>[LRC]`

Each type of message has a unique value in its message ID field. In the following texts, we reference a message type by its message ID value, e.g. "message 70".

Message type

Messages exchanged between the PIN Pad and the HOST can be divided into two categories.

One is for administration and maintenance, in general administrative messages have <SI> packet header and will return message to HOST by the same message ID.

The other is for various transactions, in general transaction messages have <STX> packet header, and comes in pair. Even number message packets sends command and data to PIN pad, then odd number message packets returns the result.

Time-out

Whenever the PIN Pad sends a message, a response (<ACK> character for acknowledgement or <NAK> character if LRC error occurred) from host is expected. If the PIN Pad does not receive a response within 5 seconds, it will retransmit the last packet. If PIN pad does not receive <ACK> or <NAK> after two retransmit attempts, it will send <EOT> character and this communication session will be terminated.

Transmission Error

The PIN Pad expects the host computer to send a NAK when the host decides that an invalid frame is received. When the PIN Pad receives a NAK, it will retransmit its last message. If the message retransmitted is invalid again, then a NAK should be sent by host to request for another try. The PIN Pad will keep on retransmitting until an <ACK> or <EOT> is received.

Packet Error

When PIN pad received a good transmission but invalid packet (wrong message id) it will ignore the packet. If the packet has acceptable message id but have wrong format. PIN pad will send <EOT> as error message. When in PIN entry functions it will send more detail error code.

Section 5 Administration and maintenance messages

Message 02 Load Master Key

Format: **<SI>02[Key ID][Key value] <FS>[Usage][Mode]<SO>[LRC]**
(with clear text key)
<SI>02[Key ID][Key value (ANSI TR31 format)]<SO>[LRC]
(with encrypted key)

Message length: Variable (38 to 94 bytes).

Usage: Load Master Keys into PP791.

PP791 can store 32 master keys (16 of them not used by PP791 application); each has a one digit ID. Master keys are divided into three groups of different functions. Refer to **Appendix A: Key management** for key usage and ID definition.

PP791 implements multiple security measures to conform Payment Card Industry (PCI) security requirement. In order to load clear text master keys, two authorized people with their password are required. Otherwise the user must issue message 02 with encrypted key value (ANSI TR31 format). See next entity "**Symmetric Keys Loading Authentication**" for detailed information.

Note:

1. The **[key value]** field's format is ASCII string with range '0'-'9', 'A'-'V', which represents a hexadecimal byte in two characters, i.e. "1F" represents 0x1F.
2. PP791 requires key loading key (master key #F) to be TDES.
3. Pass key loading authentication and then load new clear text master key will erase all other master keys, to prevent malicious key substitution. For more information refer to "**Symmetric Keys Loading Authentication**" at page 24.

Message element:

Request fame (HOST to PP791)

Field	Length	Value and description
<SI>	1	<0F>
02	2	Message ID
[Key ID]	1	'0' to '9', 'A' to 'V' (A and H to V is not used)
[Key value]	Var.	Hexadecimal string for key value. Clear text format: 32 bytes for double length, 48 bytes for triple length. TR31 format: 56 bytes for single length, 72 bytes for double length, 88 bytes for triple length.
<FS>	1	Field separator. (Optional, only available in clear text format frame if following [Usage] and [Mode] exists)
[Usage]	2	(Optional: ANSI TR-31 key usage for clear text frame.) Available value are: "K0" for key encryption. (id 0 ~ 9, B ~ G) "P0" for PIN encryption. (id 0 ~ 9) "M3" for MAC calculation. (id B ~ E) "D0" for data encryption. (id G) If omitted, default value is "K0"
[Mode]	1	(Optional: ANSI TR-31 key mode for clear text frame.) Available value are: 'D' for decryption only. (K0 keys) 'E' for encryption only (P0 / D0 keys) 'G' for MAC generation only (M3 keys) 'V' for MAC verification only (M3 keys) If omitted, default value is 'D'.
<SO>	1	<0E>
[LRC]	1	Checksum

Response fame – Error message (HOST to PP791)

Field	Length	Value and description
<SI>	1	<0F>
02	2	Message ID
?	1	
[Err msg]	1	'2': Key duplicate. '3': Internal fail: fail to allocate memory '4': Internal fail: fail to read key structure '7': Fail to decrypt key value. 'A': TR31 format error. 'B': Insecure key inject. (New key is longer than the key used to protect it.) 'C': Fail to verify MAC value. 'D': KLK does not exist / The selected key (KLK) is not with usage "K0" 'E': Incompatible key usage. 'F': Key loading count over limit.
<SO>	1	<0E>
[LRC]	1	Checksum

Message flow:

HOST	Direction	PIN Pad
Message 02 (request frame)	→	
	←	<ACK> /<NAK>/<EOT>
	←	Processing request. If format error, send <EOT> and end. Message 02 (echo of request frame).
Verify echo frame. If verify ok, send <ACK>. If packet LRC error, send <NAK>. If host want to cancel key loading procedure, send <EOT>.	→	
	←	Save key value and send <EOT>

Example:

Clear Text

Master key to be loaded: 1919191919191919 5B5B5B5B5B5B5B5B

The Key ID you want to load: 0

The resulting 02 message : <SI>02019191919191919195B5B5B5B5B5B5B5B<SO>[LRC]

Encrypted (ANSI TR-31 2005 Key Variant Binding Method)

Key encrypting key (Mkey #F): 1919191919191919 5B5B5B5B5B5B5B5B

Master key to be loaded (K0): AA55AA55AA55AA55 3434343434343434

Key Block Header (KBH): (ASCII) A0072K0TD00N0000

TDES CBC encrypted key value: 7D2D21FC9ECD3EEC BB0A2615BD8F0560 5722120BDFF2CCAC

Left 4 bytes of MAC value: 319C3198

The Key ID you want to load: 0

The resulting 02 message:

<SI>020A0072K0TD00N00007D2D21FC9ECD3EECBB0A2615BD8F05605722120BDFF2CCAC319C3918 <SO>[LRC]

Encrypted (ANSI TR-31 2010 Key Derivation Binding Method)

Key condition: Load a double length PIN encryption key to key position #1

Key block protection key (KBPK): 1919191919191919 5B5B5B5B5B5B5B5B

PIN encryption key to be loaded: AA55AA55AA55AA55 3434343434343434

Padded key data: 0080 AA55AA55AA55AA55 3434343434343434 1C2965473CE2

Key Block Header (KBH): (ASCII) B0080P0TE00N0000

Derived Key block encryption key (KBEK): DB7F2A99D5647A7D D3EDFE3DA7CF5B21

Derived Key block MAC key (KBMK): 87EE6C0795954446 A34A0BB5F305BCE1

(See **Appendix A** for detail derive process)

CMAC of (KBH + Padded key data), using KBMK: EA391E5834C1AA0C

(See **Appendix A** for detail CMAC algorithm)

Use CMAC as IV to do TDES CBC encryption on padded key data, using KBEK:

Encrypted key data: 3C4F5024C59C182F 7165BC870FCB7F63 456AAE07DB736C32

The resulting 02 message:

<0F>021B0080P0TE00N0000 3C4F5024C59C182F 7165BC870FCB7F63 456AAE07DB736C32 EA391E5834C1AA0C<0E>

Symmetric Keys Loading Authentication

In order to make PP791 accept clear text key loading frame, the key loading authentication must be processed.

[Enter key loading authentication menu]

Press [CLR]+[2] on the keypad of PP791, then PP791 will show key injection authentication login screen as following:

```
ENTER PASSWORD 1:
```

(*Default password will be sent to authentic owner separately*)

The first authorized person come to enter 1st password on keypad and press [ENTER].

Then PP791 will prompt to enter 2nd password if 1st password is correct. If 2nd password is correct, too, PP791 will enter key loading mode and show following menu:

```
KEY INJECT MODE
UPDATE PASSWORD1
UPDATE PASSWORD2
INJECT MKEY/IPEK
```

Use [F1] and [F3] key to navigate light bar to "Inject MKEY/IPEK", then press [ENTER]. Then user is free to load clear text master key by message 02, or load DUKPT initial key by message 90 and 94.

[Timing constraint and message constraint of Key Inject Mode]

According to PCI security requirement, PIN pad cannot stay in Key Inject Mode forever. Thus when PP791 entered Key Inject Mode, its internal timer will start to countdown, and its operating system will monitor specific message packets. If any one of following criteria is matched, PP791 will exit Key Inject Mode and reject message 02(clear text form) and 90, 94 command:

1. When PIN pad idled for 60seconds, it will exit Key Inject Mode. (Each time 02 / 90 / 94 / 08 / 96 is succeeded, the 60 seconds counter will reset to 60 again.)
2. When PIN pad has been in Key Inject Mode for 15 minutes. It will unconditionally exit Key Inject Mode.
3. When PIN pad receives messages other than 02 / 90 / 94 / 08 / 86, it will exit Key Inject Mode.
4. When user pressed CAN key on keypad, it will exit key inject mode.

[Master key substitution protection]

When user entered Key Inject Mode, PIN pad operating system will set up a new "Key Injecting Session".

The first injected clear text master key in a new session will erase all other master keys.

The other master keys loaded in the same session will not erase any other master key.

DUKPT key set 0 and set 1 will not erase each other.

Example flow to load master keys with security:

In the following example we assume a bank receives a new PP791 and wants to initialize it before deploy. And want to update some master keys after its deployed. We also assume the master key to be loaded is position 0 and position F; their values are already stored in a Tamper Resistant Security Module (TRSM) in a secure way.

1. The bank must generate two passwords, and make two authorized people to keep them separately.
2. Authorized people must enter KEY INJECT AUTH menu and change password 1 and password 2.
3. After password changed, connect PIN Pad to TRSM, enter KEY INJECT AUTH menu again and choose Inject MKEY/IPEK function.
4. Operate TRSM to load master key #F and master key #0.

   After step 4 finishes, user can issue other commands to PIN pad (such as message 08 to select key #0 as active master key) or turn it off and deploy it.

5. To load or update master keys at field site, user should issue encrypted command 02.

Message 04 Check Master Key

Format: **<SI>04[key ID][Key Info Query]<SO>[LRC]**

Message length: Variable (6 or 7) bytes.

Usage: Host sends this message to PIN Pad for checking if the master key with an ID of [key ID] has been loaded or not. Message 04 should be used before loading any master key. Message 04 can be also used to query key information (key usage/mode/algorithm) if the designated key is not empty.

Message element:

Request frame (HOST to PIN Pad)

Field	Length	Value and description
<SI>	1	<0F>
04	2	Message ID
[key ID]	1	Master key ID (0~9, A~G)
[Key Info Query]	1	<Option>, 1: query key information
<SO>	1	<0E>
[LRC]	1	Checksum

Response frame (PIN Pad to HOST)

Field	Length	Value and description
<SI>	1	<0F>
04	2	Message ID
[response code]	1	0 Master key not loaded F Master key loaded
[Key usage]	2	<Option, if key info query filed is set> "K0": Key encrypting key. (Master key for PIN / MAC / Data key) "P0": PIN key "D0": Data key "M1": MAC key for MAC algorithm 1 "M3": MAC key for MAC algorithm 3
<FS>	1	<Option, if key info query filed is set> <1C>, filed separator
[Mode]	2	<Option, if key info query filed is set> "E": Encryption use "D": Decryption use
<FS>	1	<Option, if key info query filed is set> <1C>, filed separator
[Algorithm]	2	<Option, if key info query filed is set>

		"T": Triple DES "D": Single DES
<SO>	1	<0E>
[LRC]	1	Checksum

Message flow:

HOST	Direction	PIN Pad
Message 04 (request)	→	
	←	<ACK> (Good LRC) <NAK> (Bad LRC) <EOT> (after 3 NAKs)
	←	Check requested memory location Message 04 (response)
<ACK> (Good echo) <NAK> (Bad LRC) <EOT> (after 3 NAKs)	→	
	←	<EOT>

Message 05 Load Serial Number

Format: **<SI>05[string]<SO>[LRC]**

Message length: Variable, maximum length is 17 bytes

Usage: Load the PIN Pad with the serial number given in the message frame. PIN Pad will send the whole message frame back to host as a confirmation of good reception. Host should then send an <ACK> to confirm or <EOT> to cancel this serial number loading process if the LRC is good but serial number echoed is incorrect. Follow the standard <NAK> process if an invalid LRC is detected.

Message element:

Field	Length	Value and description
<SI>	1	<0F>
05	2	Message ID
[string]	0..12	Alphanumeric string (0~9, A~Z, a~z)
<SO>	1	<0E>
[LRC]	1	Checksum

Message flow:

HOST	Direction	PIN Pad
Message 05	→	
	←	<ACK> (Good LRC) <NAK> (Bad LRC) <EOT> (after 3 NAKs)
	←	Message 05 (echo frame) or <EOT> indicate error.
<ACK> (Good echo) <NAK> (Bad LRC) <EOT> (after 3 NAKs)	→	
	←	(Stores serial number) <EOT>

Message 06 Get Serial Number

Format: **<SI>06<SO>[LRC]**

<SI>06[string]<SO>[LRC]

Message length: Fixed 5 bytes for requesting message, variable for response message (max 17 bytes.)

Usage: This message is used to get serial number of the PIN Pad. PIN Pad will send the serial number previously loaded or string of 12 '0's as the serial number if it has not been loaded. Serial number will be displayed on LCD, too.

Message element:

Request frame (HOST to PIN Pad)

Field	Length	Value and description
<SI>	1	<0F>
06	2	Message ID
<SO>	1	<0E>
[LRC]	1	Checksum

Response frame (PIN Pad to HOST)

Field	Length	Value and description
<SI>	1	<0F>
06	2	Message ID
[string]	0..12	String for serial number
<SO>	1	<0E>
[LRC]	1	Checksum

Message flow:

HOST	Direction	PIN Pad
Message 06 (request)	→	
	←	<ACK> (Good LRC) <NAK> (Bad LRC) <EOT> (after 3 NAKs)
	←	Message 06 (response frame) or <EOT> if read error
<ACK> (Good echo) <NAK> (Bad LRC) <EOT> (after 3 NAKs)	→	
	←	<EOT>

Message 07 Test DES Implementation

Format: **<SI>07[master key][clear text][cipher text]<SO>[LRC]**

Message length: Fixed 53 bytes.

Usage: This message is used to validate DES implementation of PIN Pad. Testing result will be shown on the PIN Pad display and return response code for remote diagnostic.

Message element:

Request frame (HOST to PIN Pad)

Field	Length	Value and description
<SI>	1	<0F>
07	2	Message ID
[Master key]	16	Master Key used of encoding (hexadecimal string)
[Clear text]	16	Clear text for encoding (hexadecimal string)
[Cipher text]	16	Known ciphered text (hexadecimal string)
<SO>	1	<0E>
[LRC]	1	Checksum

Response frame (PIN Pad to HOST)

Field	Length	Value and description
<SI>	1	<0F>
07	2	Message ID
[response code]	1	0: Test Success F: Test Failed.
<SO>	1	<0E>
[LRC]	1	Checksum

Message flow:

HOST	Direction	PIN Pad
Message 07 (request)	→	
	←	<ACK> (Good LRC) <NAK> (Bad LRC) <EOT> (after 3 NAKs)
	←	Message 07 (response)
<ACK>/<NAK>/<EOT>		
	←	<EOT>

Message 08 Select Master Key

Format: **<SI>08[KeyID]<SO>[LRC]**

Message length: Fixed 6 bytes.

Usage: This message is used to select one of the 10 possible PIN encrypting master keys previously loaded using message 02. The selected master key will be used in the following transactions.

Note: **Check master key existence before change**:
This message does not respond for checking master key existence. You may choose an empty master key without notice.
TDES capability: If selected master key is a double length key (32 characters when loaded with message 02), PP791 will treat all session keys (in MK/SK message 70, Z60, Z62) as EDE encrypted by this master key. (See Appendix A)
Confirm key existence before issue 08: message 08 is not responsible for check if [KeyID] has a valid master key, use message 04 before 08.

Message element:

Field	Length	Value and description
<SI>	1	<0F>
08	2	Message ID
[KeyID]	1	0~9, one of Master key id.
<SO>	1	<0E>
[LRC]	1	Checksum

Message flow:

HOST	Direction	PIN Pad
Message 08	→	
	←	<ACK>/<NAK>/<EOT>
	←	[Success] <SI>080<SO> [Fail] <SI>08[errCode]<SO>
<ACK>/<NAK>/<EOT>	→	
	←	<EOT>

Error Message:

Error Code	Meaning
'1'	Key index > 9

Message 09 Communication Test

Format: **<SI>09<SO>[LRC]**

<SI>09<SUB>PROCESSING<SO>[LRC]

Message length: Fixed 5 bytes for requesting message, fixed 16 bytes for response message.

Usage: This message is used to test communication link between HOST and the PIN Pad. Both HOST and PIN Pad can initiate communication test. The initiating party should send the requesting message; the other party should response with the response message that should be ACKed if received correctly. After verifying that the response message is correctly, the initiating party should send back the same response message and the receiving party should acknowledge this message. Testing results are shown on the PIN Pad display.

Message element:

Request frame (HOST to PIN Pad)

Field	Length	Value and description
<SI>	1	<0F>
09	2	Message ID
<SO>	1	<0E>
[LRC]	1	Checksum

Response frame (PIN Pad to HOST)

Field	Length	Value and description
<SI>	1	<0F>
09	2	Message ID
<SUB>	1	<1A>
[Test string]	10	ASCII string "PROCESSING"
<SO>	1	<0E>
[LRC]	1	Checksum

Result frame (PIN Pad to HOST)

Field	Length	Value and description
<SI>	1	<0F>
09	2	Message ID
[response code]	1	0: Test Success F: Test Failed.
<SO>	1	<0E>
[LRC]	1	Checksum

Message flow:

HOST	Direction	PIN Pad
Message 09 (request)	→	
	←	<ACK> (Good LRC) <NAK> (Bad LRC) <EOT> (after 3 NAKs)
	←	Message 09 (response frame)
<ACK> (Good echo) <NAK> (Bad LRC) <EOT> (after 3 NAKs)	→	
Message 09 (response)	→	
	←	<ACK> (Good LRC) <NAK> (Bad LRC)
	←	Message 09 (result frame)
<ACK> (Good echo) <NAK> (Bad LRC) <EOT> (after 3 NAKs)		
	←	<EOT>

Message 11 PIN Pad Device Connection Test

Format: **<SI>11<SO>[LRC]**

Message length: Fixed 5 bytes.

Usage: This message is used to ensure that the PIN Pad is attached to the HOST working normally. PIN Pad will response an ACK (or NAK if LRC incorrect) within one second.

Message element:

Field	Length	Value and description
<SI>	1	<0F>
11	2	Message ID
<SO>	1	<0E>
[LRC]	1	Checksum

Message flow:

HOST	Direction	PIN Pad
Message 11	→	
	←	<ACK> (Good LRC) <NAK> (Bad LRC) <EOT> (after 3 NAKs)

Message 12 Select Prompt Language

Format: **<SI>12[language index]<SO>[LRC] (request frame)**

<SI>12[status]<SO>[LRC] (response frame)

Message length: Fixed 6 bytes.

Usage: This message is used to select PP791 prompt message table to different language. There is always an English prompt table resident as default, its index number is '0'. The other prompts can be updated and selected. PP791 will select corresponding code page in order to display correctly.

NOTE. The language order or supported language may be different from this manual as the prompt message module changes. Refer to the response from PIN pad through message 1F.

Message element:

Request frame (HOST to PIN Pad)

Field	Length	Value and description
<SI>	1	<0F>
12	2	Message ID
[language index]	1	Language code '0': English (default) '1': Spanish '2': Brazilian Portuguese
<SO>	1	<0E>
[LRC]	1	Checksum

Response frame (PIN Pad to HOST)

Field	Length	Value and description
<SI>	1	<0F>
12	2	Message ID
[status]	1	Status: '0': Success 'F': prompt index value error.
<SO>	1	<0E>
[LRC]	1	Checksum

Message flow:

HOST	Direction	PIN Pad
Message 12 (Request frame)	→	
	←	<ACK> (Good LRC) <NAK> (Bad LRC) <EOT> (after 3 NAKs)
	←	Message 12 (Response frame)
<ACK>/<NAK>/<EOT>	→	
	←	<EOT>

Message 13 Adjust COM1 Baud Rate (RS-232 version only)

Format: **<SI>13[baud code][mode]<SO>[LRC]**

Message length: Variable, 6~7 bytes.

Usage: This message will change the working baud rate and transmit mode of PP791 for later operations. The setting is kept in the battery-powered memory, which will not be erased until security is breached or the battery exhausted. Baud rate will be changed after message flow ends.

Note: If [mode] parameter is not specified, the default transmit mode is N, 8, 1.

Message element:

Request frame (HOST to PIN Pad)

Field	Length	Value and description
<SI>	1	<0F>
13	2	Message ID
[baud code]	1	ASCII character '1' = 1200bps '2' = 2400bps '3' = 4800bps '4' = 9600bps '5' = 19200bps '6' = 38400bps '7' = 57600bps '8' = 115200bps
[Transmit mode] (optional)	1	ASCII character '1' = None parity, 8-bit, 1 stop bit '2' = Even parity, 7-bit, 1 stop bit '3' = Odd parity, 7-bit, 1 stop bit 0x41 = None parity, 8-bit, 1 stop bit, with XON-XOFF flow control 0x42 = Even parity, 7-bit, 1 stop bit, with XON-XOFF flow control 0x43 = Odd parity, 7-bit, 1 stop bit, with XON-XOFF flow control 0x81 = None parity, 8-bit, 1 stop bit, with RTS flow control 0x82 = Even parity, 7-bit, 1 stop bit, with RTS flow control

		0x83 = Odd parity, 7-bit, 1 stop bit, with RTS flow control 0xC1 = None parity, 8-bit, 1 stop bit, with RTS/XON-XOFF flow control 0xC2 = Even parity, 7-bit, 1 stop bit, with RTS/XON-XOFF flow control 0xC3 = Odd parity, 7-bit, 1 stop bit, with RTS/XON-XOFF flow control
<SO>	1	<0E>
[LRC]	1	Checksum

Response frame (PIN Pad to HOST)

Field	Length	Value and description
<SI>	1	<0F>
13	2	Message ID
[status]	1	ASCII character '0' for success '1' for parameter error
<SO>	1	<0E>
[LRC]	1	Checksum

Message flow:

HOST	Direction	PIN Pad
Message 13 (request)	→	
	←	<ACK> (Good LRC) <NAK> (Bad LRC) <EOT> (after 3 NAKs)
	←	Message 13 (response)
<ACK>/<NAK>/<EOT>	→	
	←	<EOT>
		(Change working baud rate and save setting)

Message 14 Enable/Disable Timer Display

Format: **<SI>14[E/D]<SO>[LRC] (request frame)**

<SI>14[Status]<SO>[LRC] (response frame)

Message length: Fixed 6 bytes.

Usage: This message is used to enable / disable PP791 system timer display.

Message element:

Request frame (HOST to PIN Pad)

Field	Length	Value and description
<SI>	1	<0F>
14	2	Message ID
[E/D]	1	'0': Disable '1': Enable
<SO>	1	<0E>
[LRC]	1	Checksum

Response frame (PIN Pad to HOST)

Field	Length	Value and description
<SI>	1	<0F>
14	2	Message ID
[Status]	1	'0': Disabled '1': Enabled '2': Format Error
<SO>	1	<0E>
[LRC]	1	Checksum

Message flow:

HOST	Direction	PIN Pad
Message 14 (Request frame)	→	
	←	<ACK> (Good LRC) <NAK> (Bad LRC) <EOT> (after 3 NAKs)
	←	Message 14 (Response frame)
<ACK>/<NAK>/<EOT>	→	
	←	<EOT>

Message 15 Adjust LCD Backlight Level

Format: **<SI>15[contrast stepping code]<SO>[LRC]**

Message length: Fixed 6 bytes.

Usage: This message will set the backlight level of LCD monitor.

Message element:

Request frame (HOST to PIN Pad)

Field	Length	Value and description
<SI>	1	<0F>
15	2	Message ID
[contrast stepping code]	1	ASCII character '1' = darkest to '8' = lightest
<SO>	1	<0E>
[LRC]	1	Checksum

Response frame (PIN Pad to HOST)

Field	Length	Value and description
<SI>	1	<0F>
15	2	Message ID
[status]	1	ASCII character '1' to '8' for success (echo of contrast stepping code). 'F' for operation fail
<SO>	1	<0E>
[LRC]	1	Checksum

Message flow:

HOST	Direction	PIN Pad
Message 15 (request)	→	
	←	<ACK> (Good LRC) <NAK> (Bad LRC) <EOT> (after 3 NAKs)
	←	Message 15 (response)
<ACK>/<NAK>/<EOT>	→	
	←	<EOT>

Message 16 Remote self-test request

Format: **<SI>16<SO>[LRC]**

Message length: Fixed 5 bytes.

Usage: This message is used to ensure that the PP791 attached to the HOST is working normally. PP791 will response an ACK (or NAK if LRC incorrect) within one second. If multiple tests failed, response code will concatenate such as "<SI>16125<SO>".

Message element:

Request frame (HOST to PIN Pad)

Field	Length	Value and description
<SI>	1	<0F>
16	2	Message ID
<SO>	1	<0E>
[LRC]	1	Checksum

Response frame (PIN Pad to HOST)

Field	Length	Value and description
<SI>	1	<0F>
16	2	Message ID
[Response]	1 .. 3	0 – Healthy 1 – RAM test fail 2 – ROM checksum fail 5 – Master keys CRC error
<SO>	1	<0E>
[LRC]	1	Checksum

Message flow:

HOST	Direction	PIN Pad
Message 16 (Request frame)	→	
	←	<ACK> (Good LRC) <NAK> (Bad LRC) <EOT> (after 3 NAKs)
	←	Message 16 (Response frame)
<ACK>/<NAK> /<EOT>	→	
	←	<EOT>

Message 17 Request random number

Format: **<SI>17<SO>[LRC]**

Message length: Fixed 5 bytes.

Usage: This message is used to request PIN Pad to generate an 8bytes random number block. This random number is generated by hardware TRNG that is certified with sufficient security.

Message element:

Request frame (HOST to PIN Pad)

Field	Length	Value and description
<SI>	1	<0F>
17	2	Message ID
<SO>	1	<0E>
[LRC]	1	Checksum

Response frame (PIN Pad to HOST)

Field	Length	Value and description
<SI>	1	<0F>
17	2	Message ID
[RndBlk]	16	Random number block generated by PP791. Format: hexadecimal string.
<SO>	1	<0E>
[LRC]	1	Checksum

Message flow:

HOST	Direction	PIN Pad
Message 17 (Request frame)	→	
	←	<ACK> (Good LRC) <NAK> (Bad LRC) <EOT> (after 3 NAKs)
	←	Message 17 (Response frame)
<ACK>/<NAK> /<EOT>	→	
	←	<EOT>

Message 18 Set PIN pad system time

Format: **<SI>18[YYYY][MM][DD][W][HH][MM][SS]<SUB>[TZ Variable]<SO>[LRC]**

(Request frame for setting local time and time zone)

<SI>18<SUB>[TZ Variable]<SO>[LRC]

(Request frame for setting time zone)

<SI>18[YYYY][MM][DD][W][HH][MM][SS]<SO>[LRC]

(Request frame for setting local time)

Message length: Fixed 20 bytes. Fixed 20 (set date and time only) or Variables (with time zone) bytes.

Usage: This message is used to set PP791 internal clock to display local time and for EMV level 2 transaction log.

The syntax of time zone environment variables are same as POSIX systems. Please be aware of the input syntax, otherwise the time zone setting will be invalid. This time zone setting just needs to setup once, and then the environment variables will be stored in PP791.

Message element:

Request frame for setting local time and time zone

(HOST to PIN Pad)

Field	Length	Value and description
<SI>	1	<0F>
18	2	Message ID
[YYYY]	4	AD year, i.e. "2014"
[MM]	2	Month, "01"~"12"
[DD]	2	Day of month, "01"~"31"
[W]	1	Day of week, "0"=Sunday, ~ "6"=Saturday
[HH]	2	Hour, "00"~"23"
[MM]	2	Minute, "00"~"59"
[SS]	2	Second, "00"~"59"
<SUB>	1	<1A>
[TZ Variable]	Var.	Time zone environment variable. (For example, send "PST+8PDT,M3.2.0/2,M11.1.0/2" to set Pacific time zone in the United States)
<SO>	1	<0E>

[LRC]	1	Checksum

Request frame for setting time zone

(HOST to PIN Pad)

Field	Length	Value and description
<SI>	1	<0F>
18	2	Message ID
<SUB>	1	<1A>
[TZ Variable]	Var.	Time zone environment variable.
<SO>	1	<0E>
[LRC]	1	Checksum

Request frame for setting local time

(HOST to PIN Pad)

Field	Length	Value and description
<SI>	1	<0F>
18	2	Message ID
[YYYY]	4	AD year, i.e. "2014"
[MM]	2	Month, "01"~"12"
[DD]	2	Day of month, "01"~"31"
[W]	1	Day of week, "0"=Sunday, ~ "6"=Saturday
[HH]	2	Hour, "00"~"23"
[MM]	2	Minute, "00"~"59"
[SS]	2	Second, "00"~"59"
<SO>	1	<0E>
[LRC]	1	Checksum

Response frame (PIN Pad to HOST)

Field	Length	Value and description
<SI>	1	<0F>
18	2	Message ID
[status]	1	0: Success F: Failed.
<SO>	1	<0E>
[LRC]	1	Checksum

Message flow:

HOST	Direction	PIN Pad
Message 18 request frame	→	
	←	<ACK> (Good LRC) <NAK> (Bad LRC) <EOT> (after 3 NAKs)
	←	Message 18 Response Frame
<ACK> /<NAK> /<EOT>	→	
	←	Processing and send <EOT>

NOTE:

The followings describe that how to input a proper syntax of time zone enviorment variable.

The first format is used when there is no Daylight Saving Time in the local time zone:

std offset

The *std* string specifies the name of the time zone. It must be 3 ~ 6 characters long and must not contain a leading colon, embedded digits, commas nor plus and minus signs.

The *offset* specifies the time value you must add to the local time to get a Coordinated Universal Time value. It has syntax like [+|-]*hh*[:*mm*[:*ss*]]. This is positive if the local time zone is west of the Prime Meridian and negative if it is east. The hour must be between 0 and 23, and the minute and seconds between 0 and 59. (for example, PST+8)

The second format is used when there is Daylight Saving Time:

std offset dst[*offset*],*start*[/*time*],*end*[/*time*]

The initial *std* and *offset* specify the standard time zone, as described above. The *dst* string and *offset* specify the name and offset for the corresponding Daylight Saving Time zone. If the *offset* is omitted, it defaults to one hour ahead of standard time.

The *start* field is when Daylight Saving Time goes into effect and the *end* field is when the change is made back to standard time. The following formats are recognized for these fields:

Jn

This specifies the Julian day, with *n* between 1 and 365. February 29 is never counted, even in leap years.

n

This specifies the Julian day, with *n* between 0 and 365. February 29 is counted in leap years.

Mm.w.d This specifies day *d* of week *w* of month *m*. The day *d* must be between 0 (Sunday) and 6. The week *w* must be between 1 and 5, week 1 is the first week in which day *d* occurs, and week 5 specifies the last d day in the month. The month *m* should be between 1 and 12.

The *time* fields specify when, in the local time currently in effect, the change to the other time occurs. If omitted, the default is 02:00:00.

For example, here is how you would specify the Pacific time zone in the United States, including the appropriate Daylight Saving Time and its dates of applicability. The normal offset from UTC is 8 hours, since this is west of the prime meridian, the sign is positive. Summer time begins on the second Sunday in March at 2:00am, and ends on the first Sunday in Novenber at 2:00am.

```
PST+8PDT,M3.2.0/2,M11.1.0/2
```

Message 19 Query Firmware Version

Format: **<SI>19[part]<SO>[LRC] (request frame)**

<SI>19.[Version] <SO>[LRC] (response frame)

Message length: Fixed 6 bytes (request frame) / Variable (response frame).

Usage: This message is used to query PP791 firmware version number and firmware check sum value.

Message element:

Request frame (HOST to PIN Pad)

Field	Length	Value and description
<SI>	1	<0F>
19	2	Message ID
[part]	1	Firmware Part number 1: Uboot 2: Kernel 3: Root File System (RFS) 4: System Manager (SysMgr) 5: PP791 App.
<SO>	1	<0E>
[LRC]	1	Checksum

Response frame (PIN Pad to HOST)

Field	Length	Value and description
<SI>	1	<0F>
19	2	Message ID
.	1	<2E>, field separator
[Version]	Var.	Version string (ASCII string)
<SO>	1	<0E>
[LRC]	1	Checksum

Message flow:

HOST	Direction	PIN Pad
Message 19 (Request frame)	→	
	←	<ACK> (Good LRC) <NAK> (Bad LRC) <EOT> (after 3 NAKs)
	←	Message 19 (Response frame)
<ACK>/<NAK>/<EOT>	→	
	←	<EOT>

Message 1C Query Hardware Capability

Format: **<SI>1C<SO>[LRC] (request frame)**

<SI>1C[string]<SO>[LRC] (response frame)

Message length: Fixed 5 bytes (request). Variable (response).

Usage: This message is used to query the peripheral capability of PP791.

Message element:

Request frame (HOST to PIN Pad)

Field	Length	Value and description
<SI>	1	<0F>
1C	2	Message ID
<SO>	1	<0E>
[LRC]	1	Checksum

Response frame (PIN Pad to HOST)

Field	Length	Value and description
<SI>	1	<0F>
1C	2	Message ID
[string]	Variable	<1C>[HW1]<1C>[HW2]..... Possible string: "ICC": Smart card reader. "SAM": Security Access Module Slot. "MSR": Magnetic Stripe Reader. "0" Pure PIN pad without peripherals.
<SO>	1	<0E>
[LRC]	1	Checksum

Message flow:

HOST	Direction	PIN Pad
Message 1C (Request frame)	→	
	←	<ACK> (Good LRC) <NAK> (Bad LRC) <EOT> (after 3 NAKs)
	←	Message 1C (Response frame)
<ACK>/<NAK>/<EOT>	→	
	←	<EOT>

Message 1F Query Usable Prompt Table

Format: **<SI>1F<SO>[LRC] (request frame)**

<SI>1F[Prompt_List]<SO>[LRC] (response frame)

Message length: Fixed 6 bytes (request frame); Variable (response frame).

Usage: This message is used to query usable PP791 prompt message table list. List will be represented as 2-character country code defined by ISO 3166.

Message element:

Request frame (HOST to PIN Pad)

Field	Length	Value and description
<SI>	1	<0F>
1F	2	Message ID
<SO>	1	<0E>
[LRC]	1	Checksum

Response frame (PIN Pad to HOST)

Field	Length	Value and description
<SI>	1	<0F>
1F	2	Message ID
[Prompt List]	20	Format: [active country code] <FS> [country code0] …. <FS> [country code5]
<SO>	1	<0E>
[LRC]	1	Checksum

Message flow:

HOST	Direction	PIN Pad
Message 1F (Request frame)	→	
	←	<ACK> (Good LRC) <NAK> (Bad LRC) <EOT> (after 3 NAKs)
	←	Message 1F (Response frame)
<ACK>/<NAK>/<EOT>	→	

	←	<EOT>

Message 1J Turn ON/OFF LCD Backlight

Format: **<SI>1J[option]<SO>[LRC]**

Message length: Fixed 6 bytes.

Usage: This message can control the global backlight ON or OFF for the LCD of PP791 with backlight option. By default, PP791 will turn on its LCD backlight when it receives PIN entry or clear text entry message such as 70 or Z50, and turn it off when those functions exits. With message "1J1", the PP791 will keep LCD backlight turned ON until "1J0" is issued.

Message element:

Request frame (HOST to PIN Pad)

Field	Length	Value and description
<SI>	1	<0F>
1J	2	Message ID
[option]	1	ASCII character '0': Turn off LCD backlight '1': Turn on LCD backlight
<SO>	1	<0E>
[LRC]	1	Checksum

Response frame (PIN Pad to HOST)

Field	Length	Value and description
<SI>	1	<0F>
1J	2	Message ID
[status]	1	ASCII character '0': Turn off LCD backlight '1': Turn on LCD backlight
<SO>	1	<0E>
[LRC]	1	Checksum

Message flow:

HOST	Direction	PIN Pad
Message 1J	→	
	←	<ACK> (Good LRC) <NAK> (Bad LRC) <EOT> (after 3 NAKs)
	←	Message 1J (Response frame)
<ACK>/ <NAK>/ <EOT>	→	
	←	<EOT>
		LCD backlight turned ON/OFF

Message 1KTurn ON/OFF LCD Power-save mode

Format: **<SI>1K[option]<SO>[LRC]**

Message length: Fixed 6 bytes.

Usage: For power consumption saving, this message can make PP791 turns the backlight level to darker after several seconds automatically. The backlight level will return to the value set before when a key strobe is pressed, a message about PIN entry or key entry is received.

Message element:

Request frame (HOST to PIN Pad)

Field	Length	Value and description
<SI>	1	<0F>
1K	2	Message ID
[option]	1	ASCII character '0': Turn off LCD power-save mode '1': Turn on LCD power-save mode
<SO>	1	<0E>
[LRC]	1	Checksum

Response frame (PIN Pad to HOST)

Field	Length	Value and description
<SI>	1	<0F>
1K	2	Message ID
[status]	1	ASCII character '0': Turn off LCD power-save mode '1': Turn on LCD power-save mode
<SO>	1	<0E>
[LRC]	1	Checksum

Message flow:

HOST	Direction	PIN Pad
Message 1K	→	
	←	<ACK> (Good LRC) <NAK> (Bad LRC) <EOT> (after 3 NAKs)
	←	Message 1K (Response frame)
<ACK>/ <NAK>/ <EOT>	→	
	←	<EOT>
		LCD power-save mode turned ON/OFF

Message 1M Setup Keypad Beeper

Format: **<SI>1M[option]<SO>[LRC]**

Message length: Fixed 6 bytes.

Usage: This message is used to turn on or turn off beeper when the keypad is pressing.

Message element:

Request frame (HOST to PIN Pad)

Field	Length	Value and description
<SI>	1	<0F>
1M	2	Message ID
[option]	1	ASCII character '0': Disable keypad beeper. '1': Enable keypad beeper.
<SO>	1	<0E>
[LRC]	1	Checksum

Response frame (PIN Pad to HOST)

Field	Length	Value and description
<SI>	1	<0F>
1M	2	Message ID
[status]	1	ASCII character '0': Keypad beeper disabled. '1': Keypad beeper enabled.
<SO>	1	<0E>
[LRC]	1	Checksum

Message flow:

HOST	Direction	PIN Pad
Message 1M	→	
	←	<ACK> (Good LRC) <NAK> (Bad LRC) <EOT> (after 3 NAKs)
	←	Message 1M (Response frame)
<ACK>/ <NAK>/ <EOT>	→	
	←	<EOT>

Section 6 Contact EMV Level 2 transaction messages

EMV Level2 transaction messages are divided into 2 groups. One is EMV-configuration data operation messages (T01, T03, T05, T07, T09, T0B) and the other one is EMV-transaction messages (T11, T13, T15, T17, T19, T1C, T21, T25, T27, T29).

The ICC EMV transaction messages issuing sequence is control by PIN pad, an invalid sequence will terminate ICC EMV transaction. At the first of ICC EMV transaction, user has to issue messages T11 to make PIN pad negotiate with card and generate a candidate list of EMV-application that supported by PIN pad and card both, and then select a highest priority one automatically or selected by user (according to the terminal configuration data installed in PIN pad), finally return the EMV-application name. Message T15 is used for terminal-side to transmit transaction information such as amount and then PIN pad do a complete transaction with card if the transaction needs not to be authorized online. Terminal can issue message T1D to transmit additional transaction data into PIN pad for ICC EMV transaction, such as online response data, magnetic stripe card track data. Message T17 is applied if the transaction needs to be authorized online, terminal-side will transmit necessary information via this message to PIN pad to continue the rest steps of transaction. If the response from host contains issuer script (see EMV), terminal-side applies message T19 to input these scripts into PIN pad and PIN pad will issue these scripts at appropriate time to card. Message T1C is used to terminate an ICC EMV transaction. Finally, message T21 is used for terminal-side to get the transaction information through EMV transaction.

Terminal can apply Txx messages to handle a complete ICC EMV transaction except that the transaction must be changed to magnetic stripe card processing. According to EMV rule, if terminal fails to read IC card, the transaction could be change to magnetic stripe card transaction. Because of different types of magnetic stripe card, the magnetic stripe card processing should be taken by terminal. Terminal could issue message Q1 provided by PIN pad to make user swipe his card and then issue message 70 to complete a magnetic stripe card transaction. In this situation, terminal will get response of T11 message that indicates an failed IC card read, terminal should then issue message T1D, T15 and T17 to PIN pad for batch data capture. The flow chart for changing to magnetic stripe card processing could be referred in "Overall Contact EMV level 2 transaction flow reference" section.

The meaning of error code in the [Err Message] are listed below:

Error Code	Error Description
00000003	Service not accepted.
00000F9B	Store configuration data error.
8FFF0001	Out of memory.
8FFF0002	Parameter error.
8FFFFF02	Tag's data format error.
8FFFFF03	Some mandatory tags are not configured well.
8FFFFFF0	Command format error.
8FFFFFF1	The sequence of EMV transaction command is error.
8FFFFFF2	Terminal fundamental data is missing.
8FFFFFF3	Authentication failed.
8FFFFF1A	Authentication key expired.
8FFFFF1B	Terminal configuration data is missing.
8FFFFF1C	No configuration data of EMV application or the data is missing.
8FFFFFF4	The storage space of batch data capture is full.
8FFFFFF5	No terminal configuration data, EMV application configuration data or CA public key.
A2000001	Application initial conditions are not satisfied.
A2000002	The generated cryptogram is not allowed.
A2000007	The instruction ID of the specified is not recognized.
A200000A	The type to request application cryptogram is incorrect.
A200000C	The status response (SW1 SW2) is other than '9000'.
A200000D	The Generate AC command is called more than 2 times in the current transaction.
A200000E	The AIP mandatory data is missing in response data from card.
A200000F	The AFL mandatory data is missing in response data from card.
A2000010	The response template from card isn't correct.
A2000011	The format of AFL is incorrect.
A2000013	A redundant data output from card is not allowed.
A2000014	Missing mandatory data in response data from card.
EFFFFFFF	EMV transaction cancelled.
DFFFFFFF	EMV forced abort.

Message T01 Terminal Configuration Setup

Format: **<STX>T01[Pkt No.][Total Pkts]<SUB>[DO]<ETX>[LRC]**

Message length: Variable.

Usage: Host can use this command to send **terminal configuration data** to PIN pad, this command can be sent many times. PIN pad will save those data inside and apply those data when do the transaction. PIN pad will send the message T02 (Terminal Configuration Setup Response) to host.

Message element:

Field	Length	Value and description
<STX>	1	<02>
T01	3	Message ID
Pkt No.	1	Decimal. Packet sequence number (1 ~ 9)(ex. 2)
Total Pkts	1	Decimal. Total packets (1~9)(ex. 8).
<SUB>	1	<1A, Optional, only if [DO] is existed
DO	Var.	Data Object, format as below
<ETX>	1	<03>
[LRC]	1	Checksum

Data Object Format: each data object is delimited by <SUB>, and each field inside each data object is delimited by <FS>.

Data Format: (Please also refer to EMV 4.3 BOOK3, section 4.3)

Format	Description
1	a - Alphabetic data (a ~z, A~Z)
2	b - unsigned binary numbers or bit combinations
3	an - Alphanumeric data (a ~z, A~Z, 0~9)
4	ans - Alphanumeric Special data (Characters defined in ISO8859)
5	cn - Compressed numeric data (0~9, left justify, pad hexadecimal 'F's. Ex. 12 34 56 12 3F FF)
6	n - Numeric data (0~9, right justify, pad leading hexadecimal zeroes. Ex. 00 00 00 01 23 45)
7	var - Variable data (Any bit combination)

Note. User has to obey the restriction specified in EMV 4.3 BOOK3, Annex A and Appendix D of this document to load configuration data. PIN pad will check if the length of each configuration data item is consistent. Any inconsistent data item will make data loading fail.

Note. If the data format is '2' (binary), '5'(compressed numeric), '6'(numeric) or '7'(variable data), it can not be allocated in message T01 directly. It should be transferred into hexadecimal string and then allocated in message T01.

Example: (Clear the terminal configuration data and then setup new data.)

Merchant Category Code: 0000 (Numerical)

Terminal ID: SmartPOS (Ascii)

UI Capability: 0x01 (binary)

<STX>T0111<SUB>9f15<FS>6<FS>0000<SUB>9f1c<FS>3<FS>SmartPOS<SUB>
50000002<FS>2<FS>01<ETX>[LRC]

Special Tag for PIN pad: 0x50000001, 0x50000002

Name	Description	Format	Tag	Length
Terminal UI Capability	0: Make PIN pad selects the highest priority application and ask user's confirmation. 1:Make PIN pad provides a list of candidate applications.	b	50000002	1
MSR Processing Batch Tag List	PIN pad will store transaction data according to the tag list while the transaction is performed as MSR processing. Ex, for tag list (829F365F3 09F399F029F03), PIN pad will store transaction data of tag number 0x82, 0x9F36, 0x5F30, 0x9F39, 0x9F02 and 0x9F03.	b	50000003	var
Online PIN Block Tag Define	User can define new tag number for online PIN block.	b	50000004	1~4
Online PIN Key Tag Define	User can define new tag number for online PIN key.	b	50000005	1~4

These data object are defined in EMV 4.3 BOOK3, Annex A without tag values. The tag values are defined by UIC.

NOTE.

In order to make PIN pad accept new defined tag (Online PIN Block Tag, Online PIN Key Tag), terminal should issue message T07 to add the new tag into tag table inside PIN pad. For example, if terminal wants to define new tag 0xDF01 and 0xDF02 for PIN block tag and PIN key tag, it must issue message T07 with value "0<SUB>DF01<FS>202020<SUB>DF02<FS>202020" to add new tag number into tag table inside PIN pad. Finally, issue message T01 with value "50000004 <FS>2<FS>DF01<SUB>50000005<FS>2<FS>DF02"

PIN pad will check if terminal downloads minimum set of terminal-related information into PIN pad. The download process will be failed if there is not enough data in this message. Please refer to Appendix E for minimum set of terminal-related data

Message flow:

HOST	Direction	PIN pad
1st Message T01	→	
	←	<ACK> (Good LRC) <NAK> (Bad LRC) <EOT> (after 3 NAKs)
	←	1st Message T02
<ACK> (Good LRC) <NAK> (Bad LRC) <EOT> (after 3 NAKs)	→	
2nd Message T01	→	
	←	<ACK> (Good LRC) <NAK> (Bad LRC) <EOT> (after 3 NAKs)
	←	2nd Message T02
<ACK> (Good LRC) <NAK> (Bad LRC) <EOT> (after 3 NAKs)	→	
…	…	…
Last one Message T01	→	
	←	<ACK> (Good LRC) <NAK> (Bad LRC) <EOT> (after 3 NAKs)
	←	Last one Message T02
<ACK> (Good LRC) <NAK> (Bad LRC) <EOT> (after 3 NAKs)	→	

Message T02 Terminal Configuration Setup Response

Format: **<STX>T02[Res][Reason][Err Msg]**[Err Tag Number]**<ETX>[LRC]**

Message length: Variable.

Usage: The response message of command T01.

Message element:

Field	Length	Value and description
<STX>	1	<02>
T02	3	Message ID
Res	1	'0': Ok, '1': Fail
Reason	1	<Optional, if Res = '1'> '1': Fatal Error '2': Format Error '3': Invalid Data Object format. '4': Invalid Tag value
Err Message	8	Optional, if Reason = '1', Hex decimal string
Err Tag Number	Var.	Optional, if Reason = '3' or '4', Hex decimal string
<ETX>	1	<03>
[LRC]	1	Checksum

Message flow: Please refer to message T01.

Message T03 Certification Authority Public Key Setup

Format: **<STX>T03[Op code][RID][PKI][Hash Algo][Hash][PK Algo][PK Leng][PK Exponent]<ETX>[LRC]**

<STX>T03[Op code][PK Modulus]<ETX>

Message length: Variable.

Usage: Host can use this command to send the **Certification Authority Public key data** to PIN pad, each command can only setup one key but this command can be sent many times. PIN pad will save those key data inside and use those data when do the transaction. PIN pad will send the message T04 (Certification Authority Public Key Setup Response) to host. The data installed into PIN pad via this message, PIN pad will save it in internal storage structure with a name same as concatenation of value in [RID] and [PKI] fields. Ex. value in [RID] field is "A000000003", value in [PKI] filed is "90", PIN pad will save these data and give an ID as "A00000000390".

Message element:

1st Packet (Load RSA public key):

Field	Length	Value and description
<STX>	1	<02>
T03	3	Message ID
Op code	1	1: Load first part of RSA public key
RID	10	Hexadecimal string, the left 5 bytes of Registered Application Provider ID
PKI	2	Public Key Index, hexadecimal string. (Refer to EMV 4.3, tag '9F22')
Hash Algorithm	2	Hash Algorithm Index, hexadecimal string '01': SHA-1. Now, PIN pad accepts only '01'.
Hash	40	Hash checksum, hexadecimal Sha1(PKModules) or Sha1(RID+PKI+PKModules+PKExp)
PK Algorithm	2	Public Key Algorithm, hexadecimal string '01': RSA digital signature. Now, PIN pad accepts only '01'.
PK Leng	2	Public Key size, hexadecimalstring, for example: '80' = 128 bytes = 1024 bits
PK Exponent	1	Public Key Exponent's size, hexadecimal '1': 3 '2': $2^{16}+1$

<ETX>	1	<03>
[LRC]	1	Checksum

2nd Packet (Load RSA public key):

Field	Length	Value and description
<STX>	1	<02>
T03	3	Message ID
Op code	1	2: Load second part of RSA public key
PK Modulus	Var	Public Key Modulus, presented in hexadecimal, data length = 2*[PK length]
<ETX>	1	<03>
[LRC]	1	Checksum

Message flow:

HOST	Direction	PIN pad
1st Message T03	→	
	←	<ACK> (Good LRC) <NAK> (Bad LRC) <EOT> (after 3 NAKs)
	←	1st CA Public Key Setup Response Message T04
<ACK> (Good LRC) <NAK> (Bad LRC) <EOT> (after 3 NAKs)	→	
2nd Message T03	→	
	←	<ACK> (Good LRC) <NAK> (Bad LRC) <EOT> (after 3 NAKs)
	←	2nd CA Public Key Setup Response Message T04
<ACK> (Good LRC) <NAK> (Bad LRC) <EOT> (after 3 NAKs)	→	

Message T04 Certification Authority Public Key Setup Response

Format: **<STX>T04[Sequence][Res][Reason][Err Msg]<ETX>[LRC]**

Message length: Variable.

Usage: The response message of command T03.

Message element:

1st, 2nd Packet:

Field	Length	Value and description
<STX>	1	<02>
T04	3	Message ID
Sequence	1	1 / 2 (first/second part of RSA public key)
Res	1	'0': Ok, '1': Fail
Reason	1	'1': Fatal Error '2': Format Error '3': Authentication Fail
Err Message	8	Optional, if Reason = '1'Hex String
<ETX>	1	<03>
[LRC]	1	Checksum

Message flow: Please refer to message T03.

Message T05 EMV Application Configuration Setup

Format: **<STX>T05[Pkt No.][Total Pkts]<SUB>[AID]<SUB>[DO]<ETX>[LRC]**

<STX>T05[Pkt No.][Total Pkts]<SUB>[DO]<ETX>[LRC]

Message length: Variable.

Usage: Host can use this command to send the **EMV application configuration data** to PIN pad, this command can be sent many times but each command is only for one application. PIN pad will save those data inside and use those data when do the transaction. PIN pad will send the message T06 (EMV Application Configuration Setup Response) to host. The data installed into PIN pad via this message, PIN pad will save it in internal storage structure with a name same as in [AID] field.

Message element:

1st Message:

Field	Length	Value and description
<STX>	1	<02>
T05	3	Message ID
Pkt No.	1	Decimal. Packet sequence number (1 ~ 9)
Total Pkts	1	Decimal. Total packets (1~9)(ex. 8).
<SUB>	1	Optional, if Pkt No is 1 <1A>
AID	10~32	Optional, if Pkt No is 1. EMV Application ID, refer to EMV 4.3
<SUB>	1	Optional, only if [DO] is existed
DO	Var.	Data Object, format as below
<ETX>	1	<03>
[LRC]	1	Checksum

Rest of Message (If there are 2 more messages):

Field	Length	Value and description
<STX>	1	<02>
T05	3	Message ID
Pkt No.	1	Decimal. Packet sequence number (1 ~ 9)
Total Pkts	1	Decimal. Total packets (1~9)(ex. 8).
<SUB>	1	Optional, only if [DO] is existed
DO	Var.	Data Object, format as below
<ETX>	1	<03>
[LRC]	1	Checksum

Data Format: (Please also refer to EMV 4.3 BOOK3, section 4.3)

Format	Description
1	a - Alphabetic data (a ~z, A~Z)
2	b - unsigned binary numbers or bit combinations
3	an - Alphanumeric data (a ~z, A~Z, 0~9)
4	ans - Alphanumeric Special data (Characters defined in ISO8859)
5	cn - Compressed numeric data (0~9, left justify, pad hexadecimal 'F's. Ex. 12 34 56 12 3F FF)
6	n - Numeric data (0~9, right justify, pad leading hexadecimal zeroes. Ex. 00 00 00 01 23 45)
7	var - Variable data (Any bit combination)

Note. User has to obey the restriction specified in EMV 4.3 BOOK3, Annex A and Appendix D of this document to load configuration data. PIN pad will check if the length of each configuration data item is consistent. Any inconsistent data item will make data loading fail.

Note. If the data format is '2' (binary), '5'(compressed numeric), '6'(numeric) or '7'(variable data), it can not be allocated in message T05 directly. It should be transfer into hexadecimal string and then allocated in message T05.

Example:

Default TDOL: 97 07 9f 02 06 95 05 9b 02 (binary)

Threshold Value for Biased Random Selection: 00 00 00 00 40 00(numerical)

Max. Target percentage to be used for Biased Random selection: 100 (decimal) / 0x46 (binary)

<STX>T0511<SUB>A00000031010<SUB>97<FS>2<FS>97079f020695059b02
<SUB>40000004<FS>6<FS>000000004000 <SUB>40000006<FS>2<FS>46<ETX>[LRC]

PIN pad saves these data and give an ID as "A00000031010" to this group of data.

Special Tag for PIN pad: 0x40000001, 0x40000004, 0x40000005, 0x40000006, 0x40000007, 0x40000008, 0x40000009.

Name	Description	Format	Tag	Length
Application Selection Indicator	See below	n	40000001	1
Threshold Value for Biased Random Selection	See below	n	40000004	6
Target Percentage to be used for Biased Random Selection	See below	b	40000005	1
Maximum Target Percentage to be used for Biased Random Selection	See below	b	40000006	1

Terminal Action Code - Default	See below	b	40000007	5
Terminal Action Code - Denial	See below	b	40000008	5
Terminal Action Code - Online	See below	b	40000009	5
Data Tags required in Online message (ARQC)	See below	b	4000000A	var.
Data tags required in reversal message	See below	b	4000000D	var.
Data tags for batch data capture	See below	b	40000010	var.
ARC Approve	See below	b	4000001A	var.
ARC Decline	See below	b	4000001B	var.
ARC Referral	See below	b	4000001C	var.

These data object are defined in EMV 4.3 BOOK3, Annex A without tag values. The tag values are defined by PIN pad.

Message flow:

HOST	Direction	PIN pad
1st Message T05	→	
	←	<ACK> (Good LRC) <NAK> (Bad LRC) <EOT> (after 3 NAKs)
	←	1st Message T06
<ACK> (Good LRC) <NAK> (Bad LRC) <EOT> (after 3 NAKs)	→	
2nd Message T05	→	
	←	<ACK> (Good LRC) <NAK> (Bad LRC) <EOT> (after 3 NAKs)
	←	Application Select Response. 2nd Message T06
<ACK> (Good LRC) <NAK> (Bad LRC) <EOT> (after 3 NAKs)	→	
…	…	…
Last one Message T05	→	
	←	<ACK> (Good LRC) <NAK> (Bad LRC) <EOT> (after 3 NAKs)
	←	Application Select Response. Last one Message T06
<ACK> (Good LRC) <NAK> (Bad LRC) <EOT> (after 3 NAKs)	→	

PIN pad will check if terminal downloads minimum set of EMV Application-related information into PIN pad. The download process will be failed if there is not enough data in this message. Please refer to Appendix E for minimum set of EMV Application -related data

Message T06 EMV Application Configuration Setup Response

Format: **<STX>T06[Res][Reason][Err Msg]**[Err Tag Number]**<ETX>[LRC]**

Message length: Variable.

Usage: The response message of command T05.

Message element:

Field	Length	Value and description
<STX>	1	<02>
T06	3	Message ID
Res	1	'0': Ok, '1': Fail
Reason	1	'1': Fatal Error '2': Format Error '3': Invalid Data Object format. '4': Invalid Tag value
Err Message	8	Optional, if Reason = '1'Hex String
Err Tag Number	Var.	Optional, if Reason = '3' or '4', Hex decimal string
<ETX>	1	<03>
[LRC]	1	Checksum

Message flow: Please refer to message T05.

Message T07 Data Format Table Setup

Format: **<STX>T07[Clear]<SUB>[DO]<ETX>[LRC]**

Message length: Variable.

Usage: PIN pad will check the consistent of TLV object from terminal via message T01 and T05. Terminal can add more TLV format checking rules into PIN pad. PIN pad will send the message T08 (Data Format Setup Response) to host.

Message element:

Field	Length	Value and description
<STX>	1	<02>
T07	3	Message ID
Clear	1	'1': Clear existed Data Format file
<SUB>	1	<1A, Optional, only if [DO] is existed
DO	Var.	Data Object, format as below
<ETX>	1	<03>
[LRC]	1	Checksum

Format of Data Objects:

The Data Objects for T07 shall include five data fields delimited by <FS>: [Tag#] <FS> [Format] [Min Len] [Max Len] [Flag], Each data object is delimited by a <SUB> to construct multiple <DO>. If [flag] is '0', the data object will accept the length of value within [Min Len] and [Max Len]; if [flag] is '1', the data object will only accept ether [Min Len] or [Max Len] as valid length.

Example: (setup new data format.)

Tag	Data Format	Min Len	Max Len	Or Flag
5F88	4	02	1A	0 (data length is 2 ~ 26 bytes)
5F99	2	08	0B	1 (data length is 8 bytes or 11 bytes)

<STX>T070<SUB>5F88<FS>4021A0<SUB>5F99<FS>2080B1<ETX>[LRC]

In this example, PIN pad will check if the length of data with tag value 5F99 is 8-byte **or** 11-byte. PIN pad will check if the length of data with tag value 5F88 is more than 1-byte **and** less than 27-byte.

Message flow:

HOST	Direction	PIN pad
1st Message T07	→	
	←	<ACK> (Good LRC) <NAK> (Bad LRC) <EOT> (after 3 NAKs)

	←	1st Message T08
<ACK> (Good LRC) <NAK> (Bad LRC) <EOT> (after 3 NAKs)	→	

Message T08 Data Format Table Setup Response

Format: **<STX>T08[Res][Reason][Err Msg]<ETX>[LRC]**

Message length: Variable.

Usage: The response message of command T07.

Message element:

Field	Length	Value and description
<STX>	1	<02>
T08	3	Message ID
Res	1	'0': Ok, '1': Fail
Reason	1	'1': Fatal Error '2': Format Error
Err Message	8	Optional, if Reason = '1'Hex String
<ETX>	1	<03>
[LRC]	1	Checksum

Message flow: Please refer to message T07.

Message T09 EMV Config Data Query Message

Format: **<STX>T09[Config Type]<ETX>[LRC]**

Message length: Fixed 7 bytes.

Usage: Get the group ID of EMV application data or CA public key stored in PIN pad.

Message element:

Field	Length	Value and description
<STX>	1	<02>
T09	3	Message ID
[Config Type]	1	1: All the IDs of CA public key. 2: All the IDs of EMV application data.
<ETX>	1	<03>
[LRC]	1	Checksum

Message flow:

HOST	Direction	PIN pad
Message T09	→	
	←	<ACK> (Good LRC) <NAK> (Bad LRC) <EOT> (after 3 NAKs)
	←	Message T0A
<ACK>/ <NAK>/ <EOT>	→	

Message T0A Response of EMV Config Data Query Message

Format: **<STX>T0A[Config Type][Status]<SUB>[ID List]<ETX>[LRC]**

Message length: Variable.

Usage: Get the group ID of EMV application data or CA public key stored in PIN pad.

Message element:

Field	Length	Value and description
<STX>	1	<02>
T0A	3	Message ID
Config Type	1	Return the inputted data in the field [Config Type] of T09.
Status	1	0: There is data in identified data type. 1: No data in identified data type. 2: Arrange exceed.
<SUB>	1	<1A>, Optional if Status is 0
ID List	Var	Optional, if Status is 0.
[LRC]	1	Checksum

[ID List]: The concatenation of IDs. There is a <FS> between each ID.

Ex. [ID List] = A00000000390<FS> A000000004F8<FS> A000000004F5 (Config Type = 1)

[ID List] = A0000000041010<FS>B0123456781234<FS> A000000010 (Config Type = 2)

Message flow: Please refer to message T09.

Message T0B Delete EMV Configuration Data Message.

Format: **<STX>T0B[Config Type]<SUB>[ID List]<ETX>[LRC]**

Message length: Variable.

Usage: Host can use this command to delete **EMV application configuration data or CA public key** in PIN pad, this command can be sent many times.

Message element:

Field	Length	Value and description
<STX>	1	<02>
T0B	3	Message ID
Config Type	1	1: CA public key. 2: EMV application data.
<SUB>	1	<1A>
ID List	Var	List of ID that will be erased.
<ETX>	1	<03>
[LRC]	1	Checksum

[ID List]: The concatenation of IDs. There is a <FS> between each ID.

Ex. [ID List] = A00000000390<FS> A000000004F8<FS> A000000004F5 (Config Type = 1)

[ID List] = A0000000041010<FS>B0123456781234<FS> A000000010 (Config Type = 2)

Message flow:

HOST	Direction	PIN pad
Message T0B	→	
	←	<ACK> (Good LRC) <NAK> (Bad LRC) <EOT> (after 3 NAKs)
	←	Message T0C
<ACK> (Good LRC) <NAK> (Bad LRC) <EOT> (after 3 NAKs)	→	

Message T0C Response of Delete EMV Configuration Data Message.

Format: **<STX>T0C[Config Type][Status]<SUB>[Del Result]<ETX>[LRC]**

Message length: Variable.

Usage: The response message of command T0B.

Message element:

Field	Length	Value and description
<STX>	1	<02>
T0C	3	Message ID
Config Type	1	1: CA public key. 2: EMV application data.
Status	1	0: Delete OK 1: Fatal Error 2: Format error. 3: No CA public key or EMV application data existed.
<SUB>	1	<1A>, Optional, if Status is 0.
Del Result	var	The results of delete operation on indicated ID
<ETX>	1	<03>
[LRC]	1	Checksum

[Del Result]: It's the concatenation of results for delete operation on indicated ID. There is a <FS> between each result. If the delete operation is successfully (When PIN pad finds out the matched one and delete it successfully), the result is 0. If there is no such ID as terminal specified, the result is 1.

Ex. Terminal issues message T0B to erase EMV application data with ID "A0000000102020", "A0000020" and "A0000000103030". PIN pad now keeps EMV application data with ID "A0000000103030" only.
The data in [Del Result] field will be "1<FS>1<FS>0".

Message flow: Please refer to message T0B.

Message T11 Application Select

Format: **<STX>T11<ETX>[LRC]**

Message length: Fixed 6 bytes.

Usage: PIN pad performs an application select on the active smart card. PIN pad will also prompt user to insert its card if the card has not yet presented. PIN pad will send the message T12 (Application Selection Response) to host.

Message element:

Field	Length	Value and description
<STX>	1	<02>
T11	3	Message ID
<ETX>	1	<03>
[LRC]	1	Checksum

Message flow:

HOST	Direction	PIN pad
Message T11	→	
	←	<ACK> (Good LRC) <NAK> (Bad LRC) <EOT> (after 3 NAKs)
	←	Application Select Response. Message T12
<ACK> (Good LRC) <NAK> (Bad LRC) <EOT> (after 3 NAKs)	→	

Message T12 Application Select Response

Format: **<STX>T12[Status][Reason][Application Name][ErrMessaeg]<ETX>[LRC]**

Message length: Variable, depending on the length of returned application name.

Usage: The message contains the name of final selected application on the smart card to be sent to host. In general, application name conforms to the EMV 4.3 level 2. See these standards for more information.

Message element:

Field	Length	Value and description
<STX>	1	<02>
T12	3	Message ID
Status	1	0:OK
[Application Name]	10-32	EMV application is selected successfully. Format: Hexadecimal string. The content of this filed will not exist if there is no EMV application can be selected.
<ETX>	1	<03>
[LRC]	1	Checksum

OR

Field	Length	Value and description
<STX>	1	<02>
T12	3	Message ID
Status	1	1:Fail
Reason	1	1:Fatal Error 2:Command Format Error 3.Transaction Canceled 4.MSR processing.
[Err Message]	8	Optional, if Reason = '1'Hex String
<ETX>	1	<03>
[LRC]	1	Checksum

NOTE. According to EMV Level2's rule, if IC card can not be read, PIN pad will return message "T1214" to indicate that terminal should apply magnetic stripe card processing. In this situation, terminal should issue message Q1 to get magnetic stripe data and issue message T1D to tell PIN pad the data element in magnetic stripe card and message T15 to transmit necessary data (Amount, transaction type, and so on.) to make PIN pad record enough information for this transaction.

Message flow: Please refer to message T11.

Message T13 Application Select Next

Format: **<STX>T13<ETX>[LRC]**

Message length: Fixed 6 bytes.

Usage: If the selected EMV application is blocked (terminal will know that in message T16), terminal could issue this message to ask PIN pad to display rest of EMV application for cardholder selection.

Message element:

Field	Length	Value and description
<STX>	1	<02>
T13	3	Message ID
<ETX>	1	<03>
[LRC]	1	Checksum

Message flow:

HOST	Direction	PIN pad
Message T13	→	
	←	<ACK> (Good LRC) <NAK> (Bad LRC) <EOT> (after 3 NAKs)
	←	Application Select Response. Message T12
<ACK> (Good LRC) <NAK> (Bad LRC) <EOT> (after 3 NAKs)	→	

Message T15 Start Transaction

Format: **<STX>T15<SUB>[AmtAuth]<SUB>[AmtOther]<SUB>[CurExponent][CurCode]<SUB>[TranType]<SUB>[TranInfo]<SUB>[Account Type]<SUB>[Force Online]<SUB>[Encrypted Session key]<ETX>[LRC]**

Message length: Variable.

Usage: PIN pad performs an completed EMV transaction flow (via 'Initiate Application' through 'Completion', see EMV 4.3, book 3, chap 8.2, figure 6 - transaction flow example) based on the selected EMV application that has corrected application name on the T12 (Application Select response), PIN pad will also prompt user to do the appropriated entry when presented, like confirm or enter PIN code. PIN pad will send the message T16 (Start Transaction Response) to host. If the IC card can not be read (switch to magnetic stripe card processing), PIN pad will store the information provided from this message and return the track data of magnetic stripe card and then finish EMV transaction (The rest of operation on magnetic stripe card is outside scope of EMV). Terminal could have extra operation on magnetic stripe card transaction (Issue message 70 for PIN, and so on.).

Message element:

Field	Length	Value and description
<STX>	1	<02>
T15	3	Message ID
<SUB>	1	<1A>
[**AmtAuth**]	12	Hexadecimal, Amount Authorized tag '0x9F02'
<SUB>	1	<1A>
[**AmtOther**]	12	Hexadecimal, Amount Other, tag '0x9F03'
<SUB>	1	<1A>
[**CurExponent**]	1	Hexadecimal, tag '0x5F36'
[**CurCode**]	3	Hexadecimal, tag '0x5F2A'. For example, USD$ = 0x840
<SUB>	1	<1A>
[**TranType**]	2	Hexadecimal, Transaction Type, tag '0x9c'
<SUB>	1	<1A>
[**TranInfo**]	2	Transaction Info, tag '0x60000001'
<SUB>	1	<1A>
[**Account Type**]	2	Account Type, tag '0x5F57'

<SUB>	1	<1A>
[**Force Online**]	1	1: Force Online
<SUB>	1	<1A>
[**Encrypted Session key**]	16 or 32	(Optional, if the transaction needs user to enter password for online authorized and not session key exists, PIN pad will ignore the password input and indicate that no password is entered) DES session key / TDES session key used for EMV online PIN entry.
<ETX>	1	<03>
[LRC]	1	Checksum

Message flow:

HOST	Direction	PIN pad
Message T15	→	
	←	<ACK> (Good LRC) <NAK> (Bad LRC) <EOT> (after 3 NAKs)
	←	Start Transaction Response. Message T16
<ACK> (Good LRC) <NAK> (Bad LRC) <EOT> (after 3 NAKs)	→	

Message T16 Start Transaction Response

Format: **<STX>T16[Status][Reason][Err Message][Result]<SUB>**
<Advice Need><Reversal Need><Financial Need><ETX>[LRC]

Message length: Variable.

Usage: The message contains the transaction result on the smart card to be sent to terminal.

Message element:

Field	Length	Value and description
<STX>	1	<02>
T16	3	Message ID
Status	1	0:OK; 1:Fail
Reason	1	Optional. (If Status = 1) 1:Fatal Error 2:Command Format Error
Err Message	8	Optional, if Reason = '1'Hex String
Result	2	Optional. (If Status = 0) 'Y1': Offline Approved, 'Z1': Offline Declined 'Y3': Unable to go online, Offline Approved 'Z3': Unable to go online, Offline Decline. 'Y4': Online Approved 'Z4': Online Decline 'A1': Online Authorize Request, 'A4': Application reselection.
<Reversal Need>	1	0: Terminal does not need to send a reversal to host for this transaction 1: Terminal should send a reversal to host for this transaction.
<ETX>	1	<03>
[LRC]	1	Checksum

Note: If the [Result] is 'A1', then terminal should send online authorization request to issuer host; and after done, send message T17 to PIN pad to continue transaction. (See EMV 4.3, book 3, chap 9, figure 7)

Note: If the transaction is switched to MSR processing, T16 will always return "A1" in [Result] field.

Note: If the previous selected application on IC card can't do the transaction (for example, this

application has blocked) but has another application ID within this IC card, PIN pad will response 'A4' to let terminal know and terminal can issue message T13 to select another application ID and issue message T15 to re-start the transaction. Please refer the paragraph of "Ref. 5 Packet command flow for first EMV application is blocked" in the section of "Overall EMV Level 2 transaction flow reference".

Message flow: Please refer to message T15.

Message T17 Send Online Authorized Code

Format: **<STX>T17[OnlineRes]<SUB>[ARC]<SUB>[IAD]<ETX>[LRC]**

Message length: Fixed 7 or 16 bytes.

Usage: PIN pad continues to perform the EMV transaction flow after received this online response from host when the transaction response T16 is 'A1' (online authorized request, see EMV 4.3, book 3, chap 8.2, figure 6 – transaction flow example). PIN pad will send the message T16 (Start Transaction Response) to host.

Message element:

Field	Length	Value and description
<STX>	1	<02>
T17	3	Message ID
Online Res	1	'0': Unable to go online
<ETX>	1	<03>
[LRC]	1	Checksum

OR

Field	Length	Value and description
<STX>	1	<02>
T17	3	Message ID
Online Res	1	'1': Get Online Response,
<SUB>	1	<1A>
ARC	2	Optional, if there is ARC from host. Authorisation Response code, ASCII (0~9, A~Z),.
<SUB>	1	<1A>
[**IAD**]	16~32	Optional, if there is IAD from host. Issuer Authentication Data , Hex string.
<ETX>	1	<03>
[LRC]	1	Checksum

OR (If the transaction is changed to Magnetic stripe card processing)

Field	Length	Value and description
<STX>	1	<02>
T17	3	Message ID
Online Res	1	'3': MSR Online Approve other: MSR Online Decline,
<ETX>	1	<03>
[LRC]	1	Checksum

Note: If [Online Res] is '4', then PIN pad will decide to approve or decline by the rule of TAC/IAC default.

Message flow:

HOST	Direction	PIN pad
Message T17	→	
	←	<ACK> (Good LRC) <NAK> (Bad LRC) <EOT> (after 3 NAKs)
	←	Start Transaction Response. Message T16
<ACK> (Good LRC) <NAK> (Bad LRC) <EOT> (after 3 NAKs)	→	

Message T19 Send Issuer Script Command

Format: **<STX>T19[IS]<ETX>[LRC]**

Message length: Var.

Usage: PIN pad performs the Issuer script processing as in EMV transaction flow after received this command from the host those are the response message when doing online authorization. This command can be send many times if too many script commands need to be processed, but the last one should be send before T17 command.

Message element:

Field	Length	Value and description
<STX>	1	<02>
T19	3	Message ID
IS	Var.	Issuer Script, format as follow. Hex string.
<ETX>	1	<03>
[LRC]	1	Checksum

Message flow:

HOST	Direction	PIN pad
Message T19	→	
	←	<ACK> (Good LRC) <NAK> (Bad LRC) <EOT> (after 3 NAKs)
	←	Message T20
<ACK> (Good LRC) <NAK> (Bad LRC) <EOT> (after 3 NAKs)	→	

Issuer Script Format: (see EMV 4.3, book 3, chap 10.10, Figure 14)

T	L	T	L	Script ID	Commands
'71' or '72'	Including Script ID, tags, lengths	'9F18'	'04'	Identifier (4 bytes)	Issuer Script Command Format (see below)

Issuer Script Command Format: (see EMV 4.3, book 3, chap 10.10, Figure 15)

T1	L1	V1	T2	L2	V2	T3	L3	V3	Tx	Lx	Vx
'86'	L(V1)	Cmd	'86'	L(V2)	Cmd	'86'	L(V3)	Cmd	'86'	L(Vx)	cmd

Message T1D Transaction Data loading

Format: **<STX>T1D<SUB>[DO]<ETX>[LRC]**

Message length: Variable.

Usage: Terminal can use this command to send transaction data to PIN pad, this command can be sent many times. PIN pad will save those data inside and apply those data when do the transaction. PIN pad will send the message T1E to terminal.

Message element:

Field	Length	Value and description
<STX>	1	<02>
T1D	3	Message ID
<SUB>	1	<1A, Optional, only if [DO] is existed
DO	Var.	Data Object, format as below
<ETX>	1	<03>
[LRC]	1	Checksum

Data Object:

Each <DO> shall include three data field: [Tag#] || [Format] || [Value], and each field shall delimit with a <FS>. Each data object is delimited by a <SUB> to construct multiple <DO>. The [tag#] defined in EMV 4.3 Book3 Annex A and specific [tag#] defined at Appendix D of this manual have the pre-defined data format and length range, those [tag#] must follow up the rule, otherwise the PP791 will reject this data setup. Any customer defined [tag#] number shall use the command T07 pre-defined the data format and length range before load by this T1D command.

Note. If the data format is '2' (binary), '5'(compressed numeric), '6'(numeric) or '7'(variable data),

Data Format: (Please also refer to EMV 4.3 BOOK3, section 4.3)

Format	Description
1	a - Alphabetic data (a ~z, A~Z)
2	b - unsigned binary numbers or bit combinations
3	an - Alphanumeric data (a ~z, A~Z, 0~9)
4	ans - Alphanumeric Special data (Characters defined in ISO8859)
5	cn - Compressed numeric data (0~9, left justify, pad hexadecimal 'F's. Ex. 12 34 56 12 3F FF)
6	n - Numeric data (0~9, right justify, pad leading hexadecimal zeroes. Ex. 00 00 00 01 23 45)
7	var - Variable data (Any bit combination)

Example:

(IC card can not be read, terminal changes to MSR processing and then load these data into PIN pad.)

Service Code: 0211 (Numeric)

PAN: 123456789022334455(Compressed Numeric)

Terminal sends,

<STX>T1D<SUB>5F30<FS>6<FS>0211<SUB>5A<FS>5<FS>123456789022334455<ETX>[LRC]

NOTE. The data from online host can be installed into PIN pad also. Please do not load ARC, IAD and issuer scripts via this message.

NOTE. Terminal should issue this message to load online response data before issue message T17.

Message flow:

HOST	Direction	PIN pad
Message T1D	→	
	←	<ACK> (Good LRC) <NAK> (Bad LRC) <EOT> (after 3 NAKs)
	←	Message T1E
<ACK> (Good LRC) <NAK> (Bad LRC) <EOT> (after 3 NAKs)	→	

Message T1E Transaction Data loading Response

Format: **<STX>T1E[Res][Reason][Err Msg]<ETX>[LRC]**

Message length: Variable.

Usage: The response message of command T1D.

Message element:

Field	Length	Value and description
<STX>	1	<02>
T1E	3	Message ID
Res	1	'0': Ok, '1': Fail
Reason	1	<Optional, if Res = '1'> '1': Fatal Error '2': Format Error '3': Invalid Data Object format. '4': Invalid Tag value
Err Message	8	Optional, if Reason = '1', Hex decimal string
Err Tag Number	Var.	Optional, if Reason = '3' or '4', Hex decimal string
<ETX>	1	<03>
[LRC]	1	Checksum

Message flow: Please refer to message T1D.

Message T20 Send Issuer Script Command Response

Format: **<STX>T20[Status][Reason][Err Message]<ETX>[LRC]**

Message length: Variable.

Usage: The message response the command T19.

Message element:

Field	Length	Value and description
<STX>	1	<02>
T20	3	Message ID
Status	1	0:OK ; 1:Fail
Reason	1	Optional. (if Status = 1) 1:Fatal Error 2:Command Format Error
Err Message	8	Optional, if Reason = '1'Hex String
<ETX>	1	<03>
[LRC]	1	Checksum

Message flow: Please refer to message T19.

Message T21 Get Transaction Result's Data

Format: **<STX>T21[DOL]<ETX>[LRC]**

Message length: Var.

Usage: PIN pad will retrieve the data that list on the DOL after EMV transaction done. PIN pad will send the message T22 (Get Transaction Result's Data Response) to host.

Message element:

Field	Length	Value and description
<STX>	1	<02>
T21	3	Message ID
DOL	Var	Data Object List, each object is expressed by tag number, and <SUB> is used to delimit each object. For example, 9F12<SUB>9A<SUB>9F02<SUB>….
<ETX>	1	<03>
[LRC]	1	Checksum

Message flow:

HOST	Direction	PIN pad
Message T21	→	
		<ACK> (Good LRC) <NAK> (Bad LRC) <EOT> after 3 NAKs
	←	Get Transaction Result's Data Response. Message T22
<ACK> (Good LRC) <NAK> (Bad LRC) <EOT> (after 3 NAKs)	→	

Message T22 Get Transaction Result's Data Response

Format: **<STX>T22[DO]<ETX>[LRC]**

Message length: Var.

Usage: The message contains the transaction result's data to be sent to host.

Message element:

Field	Length	Value and description
<STX>	1	<02>
T22	3	Message ID
[DO]	Var	Data Object, each data object is expressed by TLV format with an <FS> delimit in each field, and <SUB> is used to delimit each object. For example: 9F12<FS>0F<FS>CREDITO DE VISA<SUB>9A<FS>06<FS>050806<SUB>…….
<ETX>	1	<03>
[LRC]	1	Checksum

Message flow: Please refer to message T21.

Message T23 Erase EMV Transaction Log.

Format: **<STX>T23<ETX>[LRC]**

Message length: Fixed 6 bytes.

Usage: The message is used to purge the memory (flash) area for transaction logs.

Message element:

Field	Length	Value and description
<STX>	1	<02>
T23	3	Message ID
<ETX>	1	<03>
[LRC]	1	Checksum

Message flow:

HOST	Direction	PIN pad
Message T23	→	
	←	<ACK> (Good LRC) <NAK> (Bad LRC) <EOT> (after 3 NAKs)

Message T1C Terminal Cancel Transaction

Format: **<STX>T1C<ETX>[LRC]**

Message length: Fixed 6 bytes

Usage: The message used to cancel the transaction..

Message element:

Field	Length	Value and description
<STX>	1	<02>
T1C	3	Message ID
<ETX>	1	<03>
[LRC]	1	Checksum

Message flow:

HOST	Direction	PIN pad
Message T1C	→	
	←	<ACK> (Good LRC) <NAK> (Bad LRC) <EOT> (after 3 NAKs)

Message T25 Get Batch Data

Format: **<STX>T25<ETX>[LRC]**

Message length: Fixed 6 bytes.

Usage: Issue this message to get batch data (EMV).

Message element:

Field	Length	Value and description
<STX>	1	<02>
T25	3	Message ID
<ETX>	1	<03>
[LRC]	1	Checksum

Each issuing of message T25, PIN pad will return one of record in batched data via message T26. Terminal could keep issuing message T25 until PIN pad return message to indicate that there is no more record in batch data.

User can load a tag list of batch data into PIN pad, PIN pad will search the corresponding values according to the tag list and store it as transaction record. Please refer to Appendix D for more details.

Note. If there is no more memory space for batch data, EMV transaction will be always failed transaction. Please issue message T23 to release the memory space.

Note. PIN pad can store at most 1000 records.

Message flow:

HOST	Direction	PIN pad
Message T25	→	
	←	<ACK> (Good LRC) <NAK> (Bad LRC) <EOT> (after 3 NAKs)
	←	Message T26 (T262)
<ACK> (Good LRC) <NAK> (Bad LRC) <EOT> (after 3 NAKs)	→	
Message T25	→	
	←	<ACK> (Good LRC) <NAK> (Bad LRC) <EOT> (after 3 NAKs)
	←	Message T26 (T262)
<ACK> (Good LRC) <NAK> (Bad LRC) <EOT> (after 3 NAKs)	→	
…	…	…
Message T25	→	
	←	<ACK> (Good LRC) <NAK> (Bad LRC) <EOT> (after 3 NAKs)
	←	Message T26 (T261)
<ACK> (Good LRC) <NAK> (Bad LRC) <EOT> (after 3 NAKs)	→	PIN pad erases batch data.

Message T26 Response of Get Batch Data message

Format: **<STX>T26[Status][record of Batch data]<ETX>[LRC]**

Message length: var.

Usage: Return batch data to terminal.

Message element:

Field	Length	Value and description
<STX>	1	<02>
T26	3	Message ID
Status	1	0: No more record. 1: It is the last one record inside PIN pad. 2: There is still record inside PIN pad.
[Batch data]	Var.	Hex string.
<ETX>	1	<03>
[LRC]	1	Checksum

Format of Batch data:

According to the tag list of batch data (refer to Appendix D), PIN pad will search the corresponding values according to the tag list and store it as transaction record.

[EMV Tag Number (1 ~ 4 byte)] || [Length (1byte)] || [Value] || [EMV Tag Number (1 ~ 4 byte)] || [Length (1byte)] || [Value] || …[EMV Tag Number (1 ~ 4 byte)] || [Length (1byte)] || [Value]. PIN pad can save at most 256 bytes of data as one record, the right part of data will be ignored if the length record is greater than 256 byte.

PIN pad will unpack the binary data into hex string and return to terminal. For example, the data of one record is 0x9F02 || 06 || 000000001100 || 5A || 10 || 1122334455667 7889900AABBCCDDEEFF, terminal will see "9F02060000000011005A101122334455667788990 0A ABBCCDDEEFF" in [Batch data] field.

Message flow: Please refer to message T25

Message T27 Get Online authorization Data

Format: **<STX>T27<ETX>[LRC]**

Message length: Fixed 6 bytes.

Usage: Issue this message to get data (EMV) for online authorization.

Message element:

Field	Length	Value and description
<STX>	1	<02>
T27	3	Message ID
<ETX>	1	<03>
[LRC]	1	Checksum

While the EMV transaction must be authorized online, issuing message T27 to get the necessary data for online authorization from PIN pad. If the transaction must be authorized online, PIN pad

User can load a tag list for online authorization data into PIN pad, PIN pad will search the corresponding values according to the tag list and return it as transaction record. Please refer to Appendix D for more details.

Message flow:

HOST	Direction	PIN pad
Message T27	→	
	←	<ACK> (Good LRC) <NAK> (Bad LRC) <EOT> (after 3 NAKs)
	←	Message T28
<ACK> (Good LRC) <NAK> (Bad LRC) <EOT> (after 3 NAKs)	→	

Message T28 Response of Get Online authorization Data message

Format: **<STX>T28[record of online authorization data]<ETX>[LRC]**

Message length: var.

Usage: Return online authorization data to terminal.

Message element:

Field	Length	Value and description
<STX>	1	<02>
T28	3	Message ID
Online authorization data	Var.	Hex string. Optional, if this transaction needs to be authorized online.
<ETX>	1	<03>
[LRC]	1	Checksum

Online authorization data:

According to the tag list of online authorization data (refer to Appendix D), PIN pad will search the corresponding values according to the tag list and return it as transaction record.

[EMV Tag Number (1 ~ 4 byte)] || [Length (1byte)] || [Value] || [EMV Tag Number (1 ~ 4 byte)] || [Length (1byte)] || [Value] || …[EMV Tag Number (1 ~ 4 byte)] || [Length (1byte)] || [Value]. PIN pad can return at most 256 bytes of data as one record, the right part of data will be ignored if the length record is greater than 256 byte.

PIN pad will unpack the binary data into hex string and return to terminal. For example, the data of one record is 0x9F02 || 06 || 000000001100 || 5A || 10 || 1122334455667788990 0AABBC CDDEEFF, terminal will see "9F02060000000011005A101122334455667788990 0AABBCCDDEEFF" in [Batch data] field.

Message flow: Please refer to message T27

Message T29 Get Reversal Data

Format: **<STX>T29<ETX>[LRC]**

Message length: Fixed 6 bytes.

Usage: Issue this message to get data (EMV) for reversal.

Message element:

Field	Length	Value and description
<STX>	1	<02>
T29	3	Message ID
<ETX>	1	<03>
[LRC]	1	Checksum

While the EMV transaction needs a reversal, issuing message T29 to get the necessary data for reversal from PIN pad. User can load a tag list for reversal data into PIN pad, PIN pad will search the corresponding values according to the tag list and return it as transaction record. Please refer to Appendix D for more details.

Message flow:

HOST	Direction	PIN pad
Message T29	→	
	←	<ACK> (Good LRC) <NAK> (Bad LRC) <EOT> (after 3 NAKs)
	←	Message T2A
<ACK> (Good LRC) <NAK> (Bad LRC) <EOT> (after 3 NAKs)	→	

Note. Terminal could always get reversal data even if the message T16 indicates that the reversal is not needed.

Message T2A Response of Get Reversal Data message

Format: **<STX>T2A[record of Reversal data]<ETX>[LRC]**

Message length: var.

Usage: Return reversal data to terminal..

Message element:

Field	Length	Value and description
<STX>	1	<02>
T2A	3	Message ID
Reversal data	Var.	Hex string. Optional, if this transaction needs a reversal.
<ETX>	1	<03>
[LRC]	1	Checksum

Reversal data:

According to the tag list of reversal data (refer to Appendix D), PIN pad will search the corresponding values according to the tag list and return it as transaction record.

[EMV Tag Number (1 ~ 4 byte)] || [Length (1byte)] || [Value] || [EMV Tag Number (1 ~ 4 byte)] || [Length (1byte)] || [Value] || …[EMV Tag Number (1 ~ 4 byte)] || [Length (1byte)] || [Value]. PIN pad can return at most 256 bytes of data as one record, the right part of data will be ignored if the length record is greater than 256 byte.

PIN pad will unpack the binary data into hex string and return to terminal. For example, the data of one record is 0x9F02 || 06 || 000000001100 || 5A || 10 || 1122334455667788990 0AABBC CDDEEFF, terminal will see "9F02060000000011005A101122334455667788990 0AABBCCDDEEFF" in [Batch data] field.

Message flow: Please refer to message T29

Overall Contact EMV Level 2 transaction flow reference

Ref. 1 Packet command flow for transaction with offline

HOST	Direction	PIN pad
T11 (Application Select)	→	
	←	T12 (Application Select Response)
T15 (Start Transaction)	→	
	←	T16 (Start Transaction Response) [Result] = 'Y1' or 'Z1'
T21 (Get Transaction Result's Data)	→	
	←	T22 (Get Transaction Result's Data Response)

Ref. 2 Packet command flow for transaction with online

HOST	Direction	PIN pad
T11 (Application Select)	→	
	←	T12 (Application Select Response)
T15 (Start Transaction)	→	
	←	T16 (Start Transaction Response) [Result] = 'A1'
T27 (Get online data from PIN pad)	→	
		T28 (Online authorization data response)
Go Online		
T1D (Send necessary online response data to PIN pad.)	→	
	←	T1E
T17 (Send Online Authorized Code)	→	
	←	T16 (Start Transaction Response) [Result] = 'Y3' or 'Y4' or 'Z3' or 'Z4'
T21 (Get Transaction Result's Data)	→	
	←	T22 (Get Transaction Result's Data Response)

Ref. 3 Packet command flow for transaction with MSR.

HOST	Direction	PIN pad
T11 (Application Select)	→	
	←	T12 (Application Select Response indicates that PIN pad fails to read IC card)
Issue magnetic stripe card commands		
T1D (Send necessary magnetic stripe card data to PIN pad.)	→	
	←	T1E
T15 (Start Transaction)	→	
	←	T16 (Start Transaction Response) [Result] = 'A1'
Go Online		
T1D (Send necessary online response data to PIN pad.)	→	
	←	T1E
T17 (Send Online Authorized Code)	→	
	←	T16 (Start Transaction Response) [Result] = 'Y4' or 'Z4'
T21 (Get Transaction Result's Data)	→	
	←	T22 (Get Transaction Result's Data Response)

Ref. 4 Packet command flow for transaction with online and Issuer Script command Processing

HOST	Direction	PIN pad
T11 (Application Select)	→	
	←	T12 (Application Select Response)
T15 (Start Transaction)	→	
	←	T16 (Start Transaction Response) [Result] = 'A1'
T27 (Get online data from PIN pad)	→	
	←	T28 (Online authorization data response)
Go Online		
T19 (Send Issuer Script command) (if many commands)	→	
	←	T20 (Send Issuer Script command Response, continued)
T1D (Send necessary online response data to PIN pad.)	→	
	←	T1E
T17 (Send Online Authorized Code)	→	
	←	T16 (Start Transaction Response) [Result] = 'Y3' or 'Y4' or 'Z3' or 'Z4'
T21 (Get Transaction Result's Data)	→	
	←	T22 (Get Transaction Result's Data Response)

Ref. 5 Packet command flow for first EMV application is blocked

HOST	Direction	PIN Pad
T11 (Application Select)	→	
	←	T12 (Application Select Response)
T15 (Start Transaction)	→	
	←	T16 (Start Transaction Response) [Result] = 'A4'
T13 (Application Select Next)	→	
	←	T12 (Application Select Response)

T15 (Start Transaction)	→	
	←	T16 (Start Transaction Response) [Result] = 'Y1' or 'Z1"
T21 (Get Transaction Result's Data)	→	
	←	T22 (Get Transaction Result's Data Response)

Section 7 Contactless EMV Level 2 transaction messages

Contactless EMV Level2 transaction messages are divided into 2 groups. One is EMV-configuration data operation messages (T51, T53, T55 ,T75, T77) and the other one is EMV-transaction messages (T61, T63, T65, T6C, T71 and T73).

The PCD EMV transaction messages issuing sequence is control by PIN pad, an invalid sequence will terminate PCD EMV transaction. Message T61 is used for terminal-side to transmit transaction information such as amount and then PIN pad do a complete transaction with card if the transaction needs not to be authorized online. Message T71 is applied if the transaction needs to be authorized online, terminal-side will transmit necessary information via this message to PIN pad to continue the rest steps of transaction. If the response from host contains issuer script (see EMV Book), terminal-side applies message T73 to input these scripts into PIN pad and PIN pad will issue these scripts at appropriate time to card. Message T6C is used to terminate an EMV transaction. Finally, message T65 is used for terminal-side to get the transaction information through PCD EMV transaction. The transaction flow chart could be referred in "Overall Contactless EMV level 2 transaction flow reference" section.

The meaning of error code in the [Err Message] are listed below:

Error Code	Error Description
00000003	Service not accepted.
00000F9B	Store configuration data error.
8FFF0001	Out of memory.
8FFF0002	Parameter error.
8FFFFF02	Tag's data format error.
8FFFFF03	Some mandatory tags are not configured well.
8FFFFFF0	Command format error.
8FFFFFF1	The sequence of EMV transaction command is error.
8FFFFFF2	Terminal fundamental data is missing.
8FFFFFF3	Authentication failed.
8FFFFF1A	Authentication key expired.
8FFFFF1B	Terminal configuration data is missing.
8FFFFF1C	No configuration data of EMV application or the data is missing.
8FFFFFF4	The storage space of batch data capture is full.
8FFFFFF5	No terminal configuration data, EMV application configuration data or CA public key.
A2000001	Application initial conditions are not satisfied.
A2000002	The generated cryptogram is not allowed.
A2000007	The instruction ID of the specified is not recognized.
A200000A	The type to request application cryptogram is incorrect.
A200000C	The status response (SW1 SW2) is other than '9000'.
A200000D	The Generate AC command is called more than 2 times in the current transaction.
A200000E	The AIP mandatory data is missing in response data from card.
A200000F	The AFL mandatory data is missing in response data from card.
A2000010	The response template from card isn't correct.
A2000011	The format of AFL is incorrect.
A2000013	A redundant data output from card is not allowed.
A2000014	Missing mandatory data in response data from card.
EFFFFFFF	EMV transaction cancelled.
DFFFFFFF	EMV forced abort.
FFFF0001	There is an error when parse the TLV list data.
FFFFFFFF	The contactless card doesn't response data.

Message T51 PCD Terminal Configuration Setup

Format: **<STX>T51[Pkt No.][Total Pkts]<SUB>[DO]<ETX>[LRC]**

Message length: Variable.

Usage: Host can use this command to send **terminal configuration data** to PIN pad, this command can be sent many times. PIN pad will save those data inside and apply those data when do the transaction. PIN pad will send the message T52 (Terminal Configuration Setup Response) to host.

Message element:

Field	Length	Value and description
<STX>	1	<02>
T51	3	Message ID
Pkt No.	1	Decimal. Packet sequence number (1 ~ 9)(ex. 2)
Total Pkts	1	Decimal. Total packets (1~9)(ex. 8).
<SUB>	1	<1A, Optional, only if [DO] is existed
DO	Var.	Data Object, format as below
<ETX>	1	<03>
[LRC]	1	Checksum

Data Object Format: each data object is delimited by <SUB>, and each field inside each data object is delimited by <FS>.

Data Format: (Please also refer to EMV **Contactless Specifications v2.4,**)

Format	Description
1	a - Alphabetic data (a ~z, A~Z)
2	b - unsigned binary numbers or bit combinations
3	an - Alphanumeric data (a ~z, A~Z, 0~9)
4	ans - Alphanumeric Special data (Characters defined in ISO8859)
5	cn - Compressed numeric data (0~9, left justify, pad hexadecimal 'F's. Ex. 12 34 56 12 3F FF)
6	n - Numeric data (0~9, right justify, pad leading hexadecimal zeroes. Ex. 00 00 00 01 23 45)
7	var - Variable data (Any bit combination)

Note. User has to obey the restriction specified in EMV Contactless Specifications v2.4, and <u>Appendix F</u> of this document to load configuration data. PIN pad will check if the length of each configuration data item is consistent. Any inconsistent data item will make data loading fail.

Note. If the data format is '2' (binary), '5'(compressed numeric), '6'(numeric) or '7'(variable data), it can not be allocated in message T51 directly. It should be transferred into hexadecimal string and then allocated in message T51.

Example: (Clear the terminal configuration data and then setup new data.)

Merchant Category Code: 0000 (Numerical)

Terminal ID: SmartPOS (Ascii)

UI Capability: 0x01 (binary)

<STX>T5111<SUB>9f15<FS>6<FS>0000<SUB>9f1c<FS>3<FS>SmartPOS<SUB>
50000002<FS>2<FS>01<ETX>[LRC]

Special Tag for PIN pad: 0x50000001, 0x50000002

Name	Description	Format	Tag	Length
Terminal UI Capability	0: Make PIN pad selects the highest priority application without cardholder's confirmation.	B	50000002	1

These data object are defined in EMV **Contactless Specifications v2.4,**, without tag values. The tag values are
defined by UIC.

PIN pad will check if terminal downloads minimum set of terminal-related information into PIN pad. The download process will be failed if there is not enough data in this message. Please refer to <u>Appendix G</u> for minimum set of terminal-related data

Message flow:

HOST	Direction	PIN pad
1st Message T51	→	
	←	<ACK> (Good LRC) <NAK> (Bad LRC) <EOT> (after 3 NAKs)
	←	1st Message T52
<ACK> (Good LRC) <NAK> (Bad LRC) <EOT> (after 3 NAKs)	→	
2nd Message T51	→	
	←	<ACK> (Good LRC) <NAK> (Bad LRC) <EOT> (after 3 NAKs)
	←	2nd Message T52
<ACK> (Good LRC) <NAK> (Bad LRC) <EOT> (after 3 NAKs)	→	

…	…	…
Last one Message T51	→	
	←	<ACK> (Good LRC) <NAK> (Bad LRC) <EOT> (after 3 NAKs)
	←	Last one Message T52
<ACK> (Good LRC) <NAK> (Bad LRC) <EOT> (after 3 NAKs)	→	

Message T52 PCD Terminal Configuration Setup Response

Format: **<STX>T52[Res][Reason][Err Msg]**[Err Tag Number]**<ETX>[LRC]**

Message length: Variable.

Usage: The response message of command T51.

Message element:

Field	Length	Value and description
<STX>	1	<02>
T52	3	Message ID
Res	1	'0': Ok, '1': Fail
Reason	1	<Optional, if Res = '1'> '1': Fatal Error '2': Format Error '3': Invalid Data Object format. '4': Invalid Tag value
Err Message	8	Optional, if Reason = '1', Hex decimal string
Err Tag Number	Var.	Optional, if Reason = '3' or '4', Hex decimal string
<ETX>	1	<03>
[LRC]	1	Checksum

Message flow: Please refer to message T51.

Message T53 PCD Certification Authority Public Key Setup

Format: **<STX>T53[Op code][RID][PKI][Hash Algo][Hash][PK Algo][PK Leng][PK Exponent]<ETX>[LRC]**

<STX>T53[Op code][PK Modulus]<ETX>

Message length: Variable.

Usage: Host can use this command to send the **Certification Authority Public key data** to PIN pad, each command can only setup one key but this command can be sent many times. PIN pad will save those key data inside and use those data when do the transaction. PIN pad will send the message T54 (Certification Authority Public Key Setup Response) to host. The data installed into PIN pad via this message, PIN pad will save it in internal storage structure with a name same as concatenation of value in [RID] and [PKI] fields. Ex. value in [RID] field is "A000000003", value in [PKI] filed is "90", PIN pad will save these data and give an ID as "A00000000390".

Message element:

1st Packet (Load RSA public key):

Field	Length	Value and description
<STX>	1	<02>
T53	3	Message ID
Op code	1	1: Load first part of RSA public key
RID	10	Hexadecimal string, the left 5 bytes of Registered Application Provider ID
PKI	2	Public Key Index, hexadecimal string. (Refer to EMV Contactless Specifications v2.4, tag '9F22')
Hash Algorithm	2	Hash Algorithm Index, hexadecimal string '01': SHA-1. Now, PIN pad accepts only '01'.
Hash	40	Hash checksum, hexadecimal. Sha1(PKModules) or Sha1(RID+PKI+PKModules+PKExp)
PK Algorithm	2	Public Key Algorithm, hexadecimal string '01': RSA digital signature. Now, PIN pad accepts only '01'.
PK Leng	2	Public Key size, hexadecimalstring, for example: '80' = 128 bytes = 1024 bits
PK Exponent	1	Public Key Exponent's size, hexadecimal 1: 3 2: $2^{16}+1$

<ETX>	1	<03>
[LRC]	1	Checksum

2nd Packet (Load RSA public key):

Field	Length	Value and description
<STX>	1	<02>
T53	3	Message ID
Op code	1	2: Load second part of RSA public key
PK Modulus	Var	Public Key Modulus, presented in hexadecimal, data length = 2*[PK length]
<ETX>	1	<03>
[LRC]	1	Checksum

Message flow:

HOST	Direction	PIN pad
1st Message T53	→	
	←	<ACK> (Good LRC) <NAK> (Bad LRC) <EOT> (after 3 NAKs)
	←	1st CA Public Key Setup Response Message T54
<ACK> (Good LRC) <NAK> (Bad LRC) <EOT> (after 3 NAKs)	→	
2nd Message T53	→	
	←	<ACK> (Good LRC) <NAK> (Bad LRC) <EOT> (after 3 NAKs)
	←	2nd CA Public Key Setup Response Message T54
<ACK> (Good LRC) <NAK> (Bad LRC) <EOT> (after 3 NAKs)	→	

Message T54 PCD Certification Authority Public Key Setup Response

Format: **<STX>T54[Sequence][Res][Reason][Err Msg]<ETX>[LRC]**

Message length: Variable.

Usage: The response message of command T53.

Message element:

1st, 2nd Packet:

Field	Length	Value and description
<STX>	1	<02>
T54	3	Message ID
Sequence	1	1 / 2 (first/second part of RSA public key)
Res	1	'0': Ok, '1': Fail
Reason	1	'1': Fatal Error '2': Format Error '3': Authentication Fail
Err Message	8	Optional, if Reason = '1'Hex String
<ETX>	1	<03>
[LRC]	1	Checksum

Message flow: Please refer to message T53.

Message T55 PCD Application Configuration Setup

Format: **<STX>T55[Pkt No.][Total Pkts]<SUB>[TXN]<SUB>[KID]<SUB>[AID]<SUB>[DO]<ETX>[LRC]**

<STX>T55[Pkt No.][Total Pkts]<SUB>[DO]<ETX>[LRC]

Message length: Variable.

Usage: Host can use this command to send the **EMV application configuration data** to PIN pad, this command can be sent many times but each command is only for one application. PIN pad will save those data inside and use those data when do the transaction. PIN pad will send the message T56 (EMV Application Configuration Setup Response) to host. The data installed into PIN pad via this message, PIN pad will save it in internal storage structure with a name same as in [AID] field.

Message element:

1st Message:

Field	Length	Value and description
<STX>	1	<02>
T55	3	Message ID
Pkt No.	1	Decimal. Packet sequence number (1 ~ 9)
Total Pkts	1	Decimal. Total packets (1~9)(ex. 8).
<SUB>	1	Optional, if Pkt No is 1 <1A>
TXN	2	Optional, if Pkt No is 1. Transaction type, refer to EMV Contactless Specifications v2.4.
<SUB>	1	Optional, if Pkt No is 1 <1A>
KID	6	Optional, if Pkt No is 1. Kernel ID, refer to **Appendix F** .
<SUB>	1	Optional, if Pkt No is 1 <1A>
AID	10~32	Optional, if Pkt No is 1. EMV Application ID, refer to EMV Contactless Specifications v2.4.
<SUB>	1	Optional, only if [DO] is existed
DO	Var.	Data Object, format as below
<ETX>	1	<03>
[LRC]	1	Checksum

Rest of Message (If there are 2 more messages):

Field	Length	Value and description
<STX>	1	<02>
T55	3	Message ID
Pkt No.	1	Decimal. Packet sequence number (1 ~ 9)
Total Pkts	1	Decimal. Total packets (1~9)(ex. 8).
<SUB>	1	Optional, only if [DO] is existed

DO	Var.	Data Object, format as below
<ETX>	1	<03>
[LRC]	1	Checksum

Data Format: (Please also refer to EMV **Contactless Specifications v2.4**)

Format	Description
1	a - Alphabetic data (a ~z, A~Z)
2	b - unsigned binary numbers or bit combinations
3	an - Alphanumeric data (a ~z, A~Z, 0~9)
4	ans - Alphanumeric Special data (Characters defined in ISO8859)
5	cn - Compressed numeric data (0~9, left justify, pad hexadecimal 'F's. Ex. 12 34 56 12 3F FF)
6	n - Numeric data (0~9, right justify, pad leading hexadecimal zeroes. Ex. 00 00 00 01 23 45)
7	var - Variable data (Any bit combination)

Note. User has to obey the restriction specified in EMV Contactless Specifications v2.4 and <u>Appendix F</u> of this document to load configuration data. PIN pad will check if the length of each configuration data item is consistent. Any inconsistent data item will make data loading fail.

Note. If the data format is '2' (binary), '5'(compressed numeric), '6'(numeric) or '7'(variable data), it can not be allocated in message T55 directly. It should be transfer into hexadecimal string and then allocated in message T55.

Example:

Default TDOL: 97 07 9f 02 06 95 05 9b 02 (binary)

Threshold Value for Biased Random Selection: 00 00 00 00 40 00(numerical)

Max. Target percentage to be used for Biased Random selection: 100 (decimal) / 0x46 (binary)

<STX>T5511<SUB>A00000031010<SUB>97<FS>2<FS>97079f020695059b02
<SUB>40000004<FS>6<FS>000000004000 <SUB>40000006<FS>2<FS>46<ETX>[LRC]

PIN pad saves these data and give an ID as "A00000031010" to this group of data.

Message flow:

HOST	Direction	PIN pad
1st Message T55	→	
	←	<ACK> (Good LRC) <NAK> (Bad LRC) <EOT> (after 3 NAKs)
	←	1st Message T56
<ACK> (Good LRC) <NAK> (Bad LRC) <EOT> (after 3 NAKs)	→	
2nd Message T55	→	
	←	<ACK> (Good LRC) <NAK> (Bad LRC) <EOT> (after 3 NAKs)
	←	Application Select Response. 2nd Message T56
<ACK> (Good LRC) <NAK> (Bad LRC) <EOT> (after 3 NAKs)	→	
…	…	…
Last one Message T55	→	
	←	<ACK> (Good LRC) <NAK> (Bad LRC) <EOT> (after 3 NAKs)
	←	Application Select Response. Last one Message T56
<ACK> (Good LRC) <NAK> (Bad LRC) <EOT> (after 3 NAKs)	→	

PIN pad will check if terminal downloads minimum set of EMV Application-related information into PIN pad. The download process will be failed if there is not enough data in this message. Please refer to **Appendix G** for minimum set of EMV Application -related data

Message T56 PCD Application Configuration Setup Response

Format: **<STX>T56[Resp][Reason][Err Msg]**[Err Tag Number]**<ETX>[LRC]**

Message length: Variable.

Usage: The response message of command T55.

Message element:

Field	Length	Value and description
<STX>	1	<02>
T56	3	Message ID
[Resp]	1	'0': Ok, '1': Fail
[Reason]	1	Option if [Resp] is '1', '1': Fatal Error '2': Format Error '3': Invalid Data Object format. '4': Invalid Tag value
[Err Message]	8	Optional, if Reason = '1'Hex String
Err Tag Number	Var.	Optional, if Reason = '3' or '4', Hex decimal string
<ETX>	1	<03>
[LRC]	1	Checksum

Message flow: Please refer to message T55.

Message T59 PCD Config Data Query Message

Format: **<STX>T59[Config Type][control] <ETX>[LRC]**

Message length: Fixed 7 bytes.

Usage: Get the group ID of PCD application data or CA public key stored in PIN pad.

Message element:

Field	Length	Value and description
<STX>	1	<02>
T59	3	Message ID
[Config Type]	1	1: All the IDs of PCD public key. 2: All the IDs of PCD application data.
[control]	1	(option)'0': Ready for next packet.
<ETX>	1	<03>
[LRC]	1	Checksum

Message flow:

HOST	Direction	PIN pad
Message T59	→	
	←	<ACK> (Good LRC) <NAK> (Bad LRC) <EOT> (after 3 NAKs)
	←	Message T5A(Result = 3)
<ACK>/ <NAK>/ <EOT>		
Message T59		
		<ACK> (Good LRC) <NAK> (Bad LRC) <EOT> (after 3 NAKs)
…	…	…
	←	Message T5A(Result = 0)
<ACK>/ <NAK>/ <EOT>		

Message T5A Response of PCD Config Data Query Message

Format: **<STX>T5A<SUB>[Result]<SUB>[ID List]<ETX>[LRC]**

Message length: Variable.

Usage: Get the group ID of EMV application data or CA public key stored in PIN pad.

Message element:

Field	Length	Value and description
<STX>	1	<02>
T5A	3	Message ID
<SUB>	1	<1A>
Result	1	0: There is data in identified data type. 1: No data in identified data type. 2: Format Error. 3: Arrange exceed.
<SUB>	1	<1A>, Optional if Result is 0, 3.
ID List	Var	Optional, if Result is 0, 3.
[LRC]	1	Checksum

[ID List]: The concatenation of IDs. There is a <FS> between each ID.

Ex. [ID List] = A00000000390<FS> A000000004F8<FS> A000000004F5 (Config Type = 1)

[ID List] = A0000000041010<FS>B0123456781234<FS> A000000010 (Config Type = 2)

Message flow: Please refer to message T59.

Message T5B Delete PCD Configuration Data Message.

Format: **<STX>T5B[Config Type]<SUB>[ID List]<ETX>[LRC]**

Message length: Variable.

Usage: Host can use this command to delete **PCD application configuration data or CA public key** in PIN pad, this command can be sent many times.

Message element:

Field	Length	Value and description
<STX>	1	<02>
T5B	3	Message ID
Config Type	1	1: CA public key. 2: EMV application data.
<SUB>	1	<1A>
ID List	Var	List of ID that will be erased.
<ETX>	1	<03>
[LRC]	1	Checksum

[ID List]: The concatenation of IDs. There is a <FS> between each ID.

Ex. [ID List] = A00000000390<FS> A000000004F8<FS> A000000004F5 (Config Type = 1)

[ID List] = A0000000041010<FS>B0123456781234<FS> A000000010 (Config Type = 2)

Message flow:

HOST	Direction	PIN pad
Message T5B	→	
	←	<ACK> (Good LRC) <NAK> (Bad LRC) <EOT> (after 3 NAKs)
	←	Message T5C
<ACK> (Good LRC) <NAK> (Bad LRC) <EOT> (after 3 NAKs)	→	

Message T5C Response of Delete PCD Configuration Data Message.

Format: **<STX>T5C<SUB>[Status]<SUB>[Del Result]<ETX>[LRC]**

Message length: Variable.

Usage: The response message of command T5B.

Message element:

Field	Length	Value and description
<STX>	1	<02>
T5C	3	Message ID
<SUB>	1	<1A>
Status	1	0: Delete OK 1: Fatal Error 2: Format error.
<SUB>	1	<1A>, Optional, if Status is 0.
Del Result	var	The results of delete operation on indicated ID
<ETX>	1	<03>
[LRC]	1	Checksum

[Del Result]: It's the concatenation of results for delete operation on indicated ID. There is a <FS> between each result. If the delete operation is successfully (When PIN pad finds out the matched one and delete it successfully), the result is 0. If there is no such ID as terminal specified, the result is 1.

Ex. Terminal issues message T5B to erase EMV application data with ID "A0000000102020", "A0000020" and "A0000000103030". PIN pad now keeps EMV application data with ID "A0000000103030" only.
The data in [Del Result] field will be "1<FS>1<FS>0".

Message flow: Please refer to message T5B.

Message T5D PCD House Keeping Message.

Format: **<STX>T5D<SUB>[Config Type]<ETX>[LRC]**

Message length: Variable.

Usage: Host can use this command to call **PCD housekeeping** in PIN pad, this command can be sent many times.

Message element:

Field	Length	Value and description
<STX>	1	<02>
T5B	3	Message ID
<SUB>	1	<1A>
Config Type	1	1: Paypass.
<ETX>	1	<03>
[LRC]	1	Checksum

Message flow:

HOST	Direction	PIN pad
Message T5D	→	
	←	<ACK> (Good LRC) <NAK> (Bad LRC) <EOT> (after 3 NAKs)
	←	Message T5E10
<ACK> (Good LRC) <NAK> (Bad LRC) <EOT> (after 3 NAKs)	→	
Message T5D	→	
	←	<ACK> (Good LRC) <NAK> (Bad LRC) <EOT> (after 3 NAKs)
	←	Message T5E10 or T5E1F
<ACK> (Good LRC) <NAK> (Bad LRC) <EOT> (after 3 NAKs)	→	

Message T5E Response of PCD House Keeping Message.

Format: **<STX>T5E<SUB>[Status][Result]<ETX>[LRC]**

Message length: Variable.

Usage: The response message of command T5D.

Message element:

Field	Length	Value and description
<STX>	1	<02>
T5E	3	Message ID
<SUB>	1	<1A>
Status	1	0: Unkown type 1: Paypass
Result	var	0: Empty or not expired. 1: Clear data 2: Fatal error. F: Format error.
<ETX>	1	<03>
[LRC]	1	Checksum

Message flow: Please refer to message T5D.

Message T61 Start Transaction

Format: **<STX>T61<SUB>[AmtAuth]<SUB>[AmtOther]<SUB>[CurExponent][CurCode]<SUB>[TranType]<SUB>[TranInfo]<SUB>[Account Type]<SUB>[Force Online]<SUB>[Encrypted Session key]<ETX>[LRC]**

Message length: Variable.

Usage: After receive this message command T61, PIN pad will perform an completed EMV transaction flow (the flow will cover 'Initiate Application' through 'Completion', see EMV Contactless Specifications 2.4, book A, chap 5.3, figure 5-2 - Logical Architecture). PIN pad will send the message T62 (Start Transaction Response) to host.

Message element:

Field	Length	Value and description
<STX>	1	<02>
T61	3	Message ID
<SUB>	1	<1A>
[AmtAuth]	12	Hexadecimal, Amount Authrozied, will be stored at tag '0x9f02'
<SUB>	1	<1A>
[AmtOther]	12	Hexadecimal, Amount Other, will be stored at tag '0x9f03'
<SUB>	1	<1A>
[CurExponent]	1	Hexadecimal, stored at tag '0x5F36'
[CurCode]	3	Hexadecimal, stored at tag '0x5F2A'. For example, USD$ = 0x840
<SUB>	1	<1A>
[TranType]	2	Hexadecimal, Transaction Type, will be stored at tag '0x9C'
<SUB>	1	<1A>
[TranInfo]	2	Transaction Info, will be stored at tag '0x60000001'
<SUB>	1	<1A>
[Account Type]	2	Account Type, stored at tag '0x5F57'
<SUB>	1	<1A>
[Force Online]	1	1: Force Online, only valid if this terminal has the capability of support online authorization.
<SUB>	1	<1A>

[Encrypted Session key]	16 or 32	Optional, DES or TDES session key that used to encrypt PIN entry when CVM ask online PIN verify. If the CVM ask online PIN verify but this session key does not input, PIN pad will ignore the PIN entry request and indicate that no PIN is entered in the TVR register.
<SUB>	1	<1A>,Optional, only if [DO] is existed
DO	Var.	Data Object, format as below
<ETX>	1	<03>
[LRC]	1	Checksum

Message flow:

HOST	Direction	PIN Pad
Message T61	→	
	←	<ACK> (Good LRC) <NAK> (Bad LRC) <EOT> (after 3 NAKs)
	←	Start Transaction Response. Message T62
<ACK> (Good LRC) <NAK> (Bad LRC) <EOT> (after 3 NAKs)	→	

Message T62 Start Transaction Response

Format: **<STX>T62[Status][Reason][Err Message][Result]<ETX>[LRC]**

Message length: Variable.

Usage: The message contains the transaction result on the smart card to be sent to terminal.

Message element:

Field	Length	Value and description
<STX>	1	<02>
T62	3	Message ID
[Status]	1	0:OK; 1:Fail
[Reason]	1	Optional. (If Status = 1) 1:Fatal Error 2:Command Format Error
[Err Message]	8	Optional, if Reason = '1'Hex String
[Result]	2	Optional. (If Status = 0) 'Y1': Offline Approved, 'Z1': Offline Declined 'Y3': Unable to go online, Offline Approved 'Z3': Unable to go online, Offline Decline. 'Y4': Online Approved 'Z4': Online Decline 'Y7': Offline Approved With Signature 'Y8': Unable to go online, Offline Approved With Signature 'Y9': Online Approved With Signature 'A1': Online Authorize Request 'B0': Try another interface.
<ETX>	1	<03>
[LRC]	1	Checksum

Note: If the [Result] is 'A1', then terminal should send online authorization request to issuer host; and after done, terminal shall send message T71 to PIN pad to continue transaction.

Message flow: Please refer to message T61.

Message T63 Get Transaction Result's Data

Format: **<STX>T63[control][DOL]<ETX>[LRC]**

Message length: Var.

Usage: PIN pad will retrieve the data that list on the DOL after EMV transaction done. PIN pad will send the message T64 (Get Transaction Result's Data Response) to host.

Message element:

Field	Length	Value and description
<STX>	1	<02>
T63	3	Message ID
[control]	1	(optional) '0': Ready for next packet, [DOL] is ignored.
[DOL]	Var	Data Object List, each object is expressed by tag number, and <SUB> is used to delimit each object. For example, 9F12<SUB>9A<SUB>9F02<SUB>….
<ETX>	1	<03>
[LRC]	1	Checksum

Message flow:

HOST	Direction	PIN Pad
Message T63	→	
		<ACK> (Good LRC) <NAK> (Bad LRC) <EOT> after 3 NAKs
	←	Get Transaction Result's Data Response. Message T64
<ACK> (Good LRC) <NAK> (Bad LRC) <EOT> (after 3 NAKs)	→	

Message T64 Get Transaction Result's Data Response

Format: **<STX>T64[Pkt NO.][Total Pkt][DO]<ETX>[LRC]**

Message length: Var.

Usage: The message contains the transaction result's data to be sent to host.

Message element:

Field	Length	Value and description
<STX>	1	<02>
T64	3	Message ID
[Pkt NO.]	1	Decimal. Packet sequence number (1 ~ 9).
[Total Pkt]	1	Decimal. Total packets (1~9).
[DO]	Var.	Data Object, each data object is expressed by TLV format with an <FS> delimit in each field, and <SUB> is used to delimit each object. For example: 9F12<FS>0F<FS>CREDITO DE VISA<SUB>9A<FS>06<FS>050806<SUB>…….
<ETX>	1	<03>
[LRC]	1	Checksum

Data Object:

PIN pad will return series of data object that list on the [DOL] field in the message T64 with TLV (tag || length|| value) format as below:

[EMV Tag Number (2 ~ 8 byte)] <FS> [Length (2byte)] <FS> [Value] <SUB>
[EMV Tag Number (2 ~ 8 byte)] <FS> [Length (2byte)] <FS> [Value] <SUB>
. . . . . .
[EMV Tag Number (2 ~ 8 byte)] <FS> [Length (2byte)] <FS> [Value].

Note: When PIN Pad response these data object, it will convert these value from binary value to hex decimal string if the data object format is "b" or "cn" or "n".

Message flow: Please refer to message T63.

Message T65 Get Online authorization Data

Format: **<STX>T65[Data type][control]<ETX>[LRC]**

Message length: Variable 7 to 8 bytes.

Usage: Issue this message to get data (EMV) for online authorization.

Message element:

Field	Length	Value and description
<STX>	1	<02>
T65	3	Message ID
[Data type]	1	0 : Data record 1 : Discretionary data
[control]	1	(optional) '0': Ready for next packet, [Data type] is ignored.
<ETX>	1	<03>
[LRC]	1	Checksum

While the EMV transaction must be authorized online, terminal shall issue message T65 to get the necessary data for online authorization from PIN pad. And PIN pad will wait terminal to send one message T71 to tell the PIN pad the go online authorization result

PIN pad will search the corresponding values according to this tag list and return it at message T66 after receive message T65 from terminal. Please refer to **Appendix G** for more details.

Message flow:

HOST	Direction	PIN Pad
Message T65	→	
	←	<ACK> (Good LRC) <NAK> (Bad LRC) <EOT> (after 3 NAKs)
	←	Message T66
<ACK> (Good LRC) <NAK> (Bad LRC) <EOT> (after 3 NAKs)	→	

Message T66 Response of Get Online authorization Data message

Format: **<STX>T66[Pkt NO.][Total Pkt][online authorization data]<ETX>[LRC]**

Message length: var.

Usage: Return online authorization data to terminal.

Message element:

Field	Length	Value and description
<STX>	1	<02>
T66	3	Message ID
[Pkt NO.]	1	Decimal. Packet sequence number (1 ~ 9)
[Total Pkt]	1	Decimal. Total packets (1~9).
[Online authorization data]	Var.	Hex string. Optional, if this transaction needs to be authorized online.
<ETX>	1	<03>
[LRC]	1	Checksum

Online authorization data:

PIN pad return series of data object with TLV (tag || length|| value) format as below:

[EMV Tag Number (2 ~ 8 byte)] || [Length (2byte)] || [Value]
[EMV Tag Number (2 ~ 8 byte)] || [Length (2byte)] || [Value]
. . . . . .
[EMV Tag Number (2 ~ 8 byte)] || [Length (2byte)] || [Value].

PIN pad can return at maximum 256 bytes of data as one record, the right part of data will be ignored if the length record is greater than 256 byte.

When PIN pad response these data object, it will convert these value from binary value to hex decimal string if the data object format is "b" or "cn" or "n". For example, the data of one record is 0x9F02 || 06 || 000000001100 || 5A || 10 || 1122334455667788990 0AABBCCDDEEFF, terminal will see "9F02060000000011005A10112233445566778899 00AABBCCDDEEFF".

Message flow: Please refer to message T65

Message T6C Cancel PCD Transaction

Format: **<STX>T6C<ETX>[LRC]**

Message length: Fixed 6 bytes.

Usage: This message used to cancel the transaction for contactless card.

Message element:

Field	Length	Value and description
<STX>	1	<02>
T6C	3	Message ID
<ETX>	1	<03>
[LRC]	1	Checksum

Message flow:

HOST	Direction	PIN pad
Message T6C	→	
	←	<ACK> (Good LRC) <NAK> (Bad LRC) <EOT> (after 3 NAKs)

Message T71 Send PCD Online Authorized Code

Format: **<STX>T71[Online Res]<SUB>[ARC]<SUB>[IAD]<ETX>[LRC]**

Message length: Fixed 7 or 16 bytes.

Usage: After receive this message T71, PIN pad will continue to perform the EMV transaction flow if the previous T62 response result is 'A1' (online authorized request, see EMV Contactless Specifications v2.4). PIN pad will response the message T62 (Start Transaction Response) to this T71 to host.

Message element:

Field	Length	Value and description
<STX>	1	<02>
T71	3	Message ID
[Online Res]	1	'0': Unable to go online
<ETX>	1	<03>
[LRC]	1	Checksum

OR

Field	Length	Value and description
<STX>	1	<02>
T71	3	Message ID
[Online Res]	1	'1': Get Online Authorize Response,
<SUB>	1	<1A>
[ARC]	2	Optional, Authorisation Response code, ASCII (0~9, A~Z).
<SUB>	1	<1A>
[IAD]	16~32	Optional, Issuer Authentication Data, Hex string. if there is IAD response from remote host , terminal shall send this to PIN pad.
<ETX>	1	<03>
[LRC]	1	Checksum

Message flow:

HOST	Direction	PIN pad
Message T71	→	
	←	<ACK> (Good LRC) <NAK> (Bad LRC) <EOT> (after 3 NAKs)
	←	Start Transaction Response. Message T62
<ACK> (Good LRC) <NAK> (Bad LRC) <EOT> (after 3 NAKs)	→	

Message T73 Send Issuer Script Command

Format: **<STX>T73[IS]<ETX>[LRC]**

Message length: Var.

Usage: PIN pad performs the Issuer script processing as in EMV transaction flow after received this command from the host those are the response message when doing online authorization. This command can be send many times if too many script commands need to be processed, but the last one should be send before T71 command.

Message element:

Field	Length	Value and description
<STX>	1	<02>
T73	3	Message ID
IS	Var.	Issuer Script, format as follow. Hex string.
<ETX>	1	<03>
[LRC]	1	Checksum

Issuer Script Format: (see EMV Contactless Specifications v2.4)

T	L	T	L	Script ID	Commands
'71' or '72'	Including Script ID, tags, lengths	'9F18'	'04'	Identifier (4 bytes)	Issuer Script Command Format (see below)

Issuer Script Command Format: (see EMV Contactless Specifications v2.4)

T1	L1	V1	T2	L2	V2	T3	L3	V3	Tx	Lx	Vx
'86'	L(V1)	Cmd	'86'	L(V2)	Cmd	'86'	L(V3)	Cmd	'86'	L(Vx)	cmd

Message T75 Revocation List Setup

Format: **<STX>T75<SUB>[RID][SN][PKI]<ETX>[LRC]**

Message length: Fixed 25 bytes

Usage: Host can use this command to send **revocation key information** to PIN pad, this command can be sent many times. PIN pad will save those information inside and check those information when do the transaction. PIN pad will send the message T76 (Revocation List Setup Response) to host.

Message element:

Field	Length	Value and description
<STX>	1	<02>
T75	3	Message ID
<SUB>	1	Separator
[RID]	10	The RID for revocated public key. Present in hexstring.
[SN]	6	The serial number of the revocated public key. Present in hexstring.
[PKI]	2	The public key index of the revocated key. Present in hexstring.
<ETX>	1	<03>
[LRC]	1	Checksum

Example:

Revocation list information

RID: A0 00 00 00 03

SN: 00 00 01

PKI: 51

<STX>T75<SUB> A00000000300000151<ETX>[LRC]

Message flow:

HOST	Direction	PIN pad
Message T75	→	
	←	<ACK> (Good LRC) <NAK> (Bad LRC) <EOT> (after 3 NAKs)
	←	Message T76
<ACK> (Good LRC) <NAK> (Bad LRC) <EOT> (after 3 NAKs)	→	

Message T76 Revocation List Setup Response

Format: **<STX>T76[Res][Reason][Err Msg]<ETX>[LRC]**

Message length: Variable.

Usage: The response message of command T75.

Message element:

Field	Length	Value and description
<STX>	1	<02>
T76	3	Message ID
[Res]	1	'0': Ok, '1': Fail
[Reason]	1	<Optional, if Res = '1'> '1': Fatal error '2': Invalid Data format '3': Revocation list is full '4': The added info exists
[Err Message]	8	Optional, if Reason = '1', Hex decimal string
<ETX>	1	<03>
[LRC]	1	Checksum

Message flow: Please refer to message T75.

Message T77 Exception List Setup

Format: **<STX>T77<SUB>[PAN][<SUB>[PAN Seq. No.]<ETX>[LRC]**

Message length: Variable.

Usage: Host can use this command to send the **exception pan** to PIN pad. PIN pad will save the information inside and check them when do the transaction. Once the transaction pan is on the exception list, the transaction will be terminated. PIN pad will send the message T78 (Exception List Setup Response) to host when it add an exception file.

Message element:

Field	Length	Value and description
<STX>	1	<02>
T77	3	Message ID
<SUB>	1	Separator
[PAN]	up to 19	Primary Account Number with numeric format
<SUB>	1	Separator. This is optional, exist if PAN Seq. No. exists.
[PAN Seq. No.]	2	PAN Sequence Number, this is an optional data.
<ETX>	1	<03>
[LRC]	1	Checksum

Message flow:

HOST	Direction	PIN pad
Message T77	→	
	←	<ACK> (Good LRC) <NAK> (Bad LRC) <EOT> (after 3 NAKs)
	←	Exception List Setup Response Message T78
<ACK> (Good LRC) <NAK> (Bad LRC) <EOT> (after 3 NAKs)	→	

Command Example:

PAN: 47 61 73 90 01 01 00 10

<STX>T77<SUB>4761739001010010<ETX><LRC>

PAN: 37 37 37 34 56 78 90 4

PAN Seq. No.: 00

<STX>T77<1A>373737345678904<1A>00<ETX><LRC>

Message T78 Exception List Setup Response

Format: **<STX>T78[Resp][Reason][Err Msg]<ETX>[LRC]**

Message length: Variable.

Usage: The response message of command T77.

Message element:

Field	Length	Value and description
<STX>	1	<02>
T78	3	Message ID
[Resp]	1	'0': Ok, '1': Fail
[Reason]	1	Option if [Resp] is '1', '1': Fatal Error '2': Format Error '3': Exception List is full '4': PAN exists
[Err Message]	8	Optional, if Reason = '1', Hex String
<ETX>	1	<03>
[LRC]	1	Checksum

Message flow: Please refer to message T77

Overall Contactless EMV Level 2 transaction flow reference

PIN pad provide one complete EMV Level 2 transaction with online or offline approval by various command flow. To force PIN pad to leave this command flow, you can either press the [CANCEL] key or send one T6C command to PIN pad.

Ref. 1 Packet command flow for transaction with offline approval

HOST	Direction	PIN pad
T61 (Start Transaction)	→	
	←	T62 (Start Transaction Response) [Result] = 'Y1' or 'Z1'
T65 (Get online data from PIN pad)	→	
	←	T66 (Online authorization data response)
T63 (Get Transaction Result's Data)	→	
	←	T64 (Get Transaction Result's Data Response)

Ref. 2 Packet command flow for transaction with online approval

HOST	Direction	PIN Pad
T61 (Start Transaction)	→	
	←	T62 (Start Transaction Response) [Result] = 'A1'
T65 (Get online data from PIN pad)	→	
	←	T66 (Online authorization data response)
T63 (Get Transaction Result's Data)	→	
	←	T64 (Get Transaction Result's Data Response)
Go Online		
T71 (Send Online Authorized Code)	→	
	←	T62 (Start Transaction Response)
T63 (Get Transaction Result's Data)	→	
	←	T64 (Get Transaction Result's Data Response)

Section 8 MIFARE card messages

This chapter describe the command of MIFARE card. The PIN pad supports MIFARE classic, Ultralight and DESFire card. All MIFARE card are compliant to the ISO/IEC 14443-1, 2 and 3. The MIFARE DESFire card support ISO/IEC 14443-4 protocol (also called "T=CL" protocol).

Message P01 Enable/Disable MIFARE

Format: **<STX>P01[Flag]<EXT>[LRC] (request frame)**

<STX>P01[Result][Reason]<ETX>[LRC] (response frame)

Message length: Fixed 7 bytes for request frame

Variable for response frame.

Usage: Enable or Disable MIFARE.

Message element:

Request frame (HOST to PIN pad)

Field	Length	Value and description
<STX>	1	<02>
P01	3	Message ID
[Flag]	1	'0': Disable MIFARE. '1': Enable MIFARE.
<ETX>	1	<03>
[LRC]	1	Checksum

Response frame (PIN pad to HOST)

Field	Length	Value and description
<STX>	1	<02>
P01	3	Message ID
[**Result**]	1	'0': Success. '1': Fail.
[Reason]	1	Optional: if [Result] = '1' '1': Format error. '2': Sequence error.
<ETX>	1	<03>
[LRC]	1	Checksum

Message flow:

HOST	Direction	PIN pad
Message P01 (request frame)	→	
	←	<ACK> (Good LRC) <NAK> (Bad LRC) <EOT> (after 3 NAKs)
	←	Message P01 (response frame)
<ACK> (Good LRC) <NAK> (Bad LRC) <EOT> (after 3 NAKs)	→	

Message P02 Query MIFARE Presence

Format: **<STX>P02<ETX>[LRC] (request frame)**

<STX>P02[Result][ATQA][Reason]<ETX>[LRC]

(response frame)

Message length: Fixed 6 bytes for request frame

Variable for response frame.

Usage: Send WUPA command to contact less card.

Message element:

Request frame (HOST to PIN pad)

Field	Length	Value and description
<STX>	1	<02>
P02	3	Message ID
<ETX>	1	<03>
[LRC]	1	Checksum

Response frame (PIN pad to HOST)

Field	Length	Value and description
<STX>	1	<02>
P02	3	Message ID
[Result]	1	'0': Success. '1': Fail.
[ATQA]	4	Optional: if [Result] = '0' ATQA: 4 bytes. Format: hexadecimal string.
[Reason]	1	Optional: if [Result] = '1' '1': Format error. '2': Sequence error. '3': Card not exists.
<ETX>	1	<03>
[LRC]	1	Checksum

Message flow:

HOST	Direction	PIN pad
Message P02 (request frame)	→	
	←	<ACK> (Good LRC) <NAK> (Bad LRC) <EOT> (after 3 NAKs)
	←	Message P02 (response frame)
<ACK> (Good LRC) <NAK> (Bad LRC) <EOT> (after 3 NAKs)	→	

Message P03 MIFARE Anti-collision

Format: **<STX>P03<ETX>[LRC] (request frame)**

<STX>P03[Result][UID][Reason]<ETX>[LRC]

(response frame)

Message length: Fixed 6 bytes for request frame

Variable for response frame.

Usage: This command is used to get the card's UID. When many cards in RFID field, PIN pad will get one card's UID.

Message element:

Request frame (HOST to PIN pad)

Field	Length	Value and description
<STX>	1	<02>
P03	3	Message ID
<ETX>	1	<03>
[LRC]	1	Checksum

Response frame (PIN pad to HOST)

Field	Length	Value and description
<STX>	1	<02>
P03	3	Message ID
[Result]	1	'0': Success. '1': Fail.
[UID]	Var.	Optional: if [Result] = '0' The UID length is 8, 14 or 20 bytes. Format: hexadecimal string.
[Reason]	1	Optional: if [Result] = '1' '1': Format error. '2': Sequence error. '3': Anti collision fail.
<ETX>	1	<03>
[LRC]	1	Checksum

Message flow:

HOST	Direction	PIN pad
Message P03 (request frame)	→	
	←	<ACK> (Good LRC) <NAK> (Bad LRC) <EOT> (after 3 NAKs)
	←	Message P03 (response frame)
<ACK> (Good LRC) <NAK> (Bad LRC) <EOT> (after 3 NAKs)	→	

Message P04 MIFARE Selection

Format: **<STX>P04<ETX>[LRC] (request frame)**

<STX>P04[Result][SAK][Reason]<ETX>[LRC]

(response frame)

Message length: Fixed 6 bytes for request frame

Variable for response frame.

Usage: Select one card to activate.

Message element:

Request frame (HOST to PIN pad)

Field	Length	Value and description
<STX>	1	<02>
P04	3	Message ID
<ETX>	1	<03>
[LRC]	1	Checksum

Response frame (PIN pad to HOST)

Field	Length	Value and description
<STX>	1	<02>
P04	3	Message ID
[Result]	1	'0': Success. '1': Fail.
[SAK]	2	Optional: if [Result] = '0' The response of select command. Format: hexadecimal string.
[Reason]	1	Optional: if [Result] = '1' '1': Format error. '2': Sequence error. '3': Select fail.
<ETX>	1	<03>
[LRC]	1	Checksum

Message flow:

HOST	Direction	PIN pad
Message P04 (request frame)	→	
	←	<ACK> (Good LRC) <NAK> (Bad LRC) <EOT> (after 3 NAKs)
	←	Message P04 (response frame)
<ACK> (Good LRC) <NAK> (Bad LRC) <EOT> (after 3 NAKs)	→	

Message P05 MIFARE Classic/Ultralight Card Activation

Format: **<STX>P05<ETX>[LRC] (request frame)**

<STX>P05[Result][ATQA]<FS>[SAK]<FS>[UID] <ETX>[LRC] (response frame1)

<STX>P05[Result][Reason]<ETX>[LRC] (response frame2)

Message length: Fixed 6 bytes for request frame

Variable for response frame.

Usage: Activate MIFARE card. This command will send WUPA, Anti-collision and Selection command to card.

Message element:

Request frame (HOST to PIN pad)

Field	Length	Value and description
<STX>	1	<02>
P05	3	Message ID
<ETX>	1	<03>
[LRC]	1	Checksum

Response frame1 (PIN pad to HOST)

Field	Length	Value and description
<STX>	1	<02>
P05	3	Message ID
[Result]	1	'0': Success.
[ATQA]	4	ATQA: 4 bytes. Format: hexadecimal string.
<FS>	1	Field separator.
[SAK]	2	The response of select command. Format: hexadecimal string.
<FS>	1	Field separator.
[UID]	Var.	The card Unique Identifier. The UID length is 8, 14 or 20 bytes. Format: hexadecimal string.
<ETX>	1	<03>
[LRC]	1	Checksum

Response frame2 (PIN pad to HOST)

Field	Length	Value and description
<STX>	1	<02>
P05	3	Message ID
[Result]	1	'1': Fail.
[Reason]	1	'1': Format error. '2': Sequence error. '3': Card activate fail.
<ETX>	1	<03>
[LRC]	1	Checksum

Message flow:

HOST	Direction	PIN pad
Message P05 (request frame)	→	
	←	<ACK> (Good LRC) <NAK> (Bad LRC) <EOT> (after 3 NAKs)
	←	Message P05 (response frame)
<ACK> (Good LRC) <NAK> (Bad LRC) <EOT> (after 3 NAKs)	→	

Message P06 MIFARE Classic/Ultralight Card HALT

Format: **<STX>P06<ETX>[LRC] (request frame)**

<STX>P06[Result][Reason]<ETX>[LRC] (response frame)

Message length: Fixed 6 bytes for request frame

Fixed 7 or 8 bytes for response frame.

Usage: Send HALT command will deactivate card.

Message element:

Request frame (HOST to PIN pad)

Field	Length	Value and description
<STX>	1	<02>
P06	3	Message ID
<ETX>	1	<03>
[LRC]	1	Checksum

Response frame (PIN pad to HOST)

Field	Length	Value and description
<STX>	1	<02>
P06	3	Message ID
[Result]	1	'0': Success. '1': Fail.
[Reason]	1	Optional: if [Result] = '1' '1': Format error. '2': Sequence error. '3': Card deactivate fail.
<ETX>	1	<03>
[LRC]	1	Checksum

Message flow:

HOST	Direction	PIN pad
Message P06 (request frame)	→	
	←	<ACK> (Good LRC) <NAK> (Bad LRC) <EOT> (after 3 NAKs)
	←	Message P06 (response frame)
<ACK> (Good LRC) <NAK> (Bad LRC) <EOT> (after 3 NAKs)	→	

Message P07 MIFARE Classic Card Authentication

Format: **<STX>P07[Sector number][Key type][key value]<ETX>[LRC] (request frame 1)**

<STX>P07[Sector number][Key number][key type]<ETX>[LRC] (request frame 2)

<STX>P07[Result][Reason]<ETX>[LRC] (response frame**)**

Message length: variable.

Usage: Before any memory operation can be done, the card has to be selected and authenticated.

NOTE: If the [Key type] and [Key value] is empty in request frame 1, the PIN pad will used key value with "FFFFFFFFFFFF" and key type with 'A'.

Message element:

Request frame (HOST to PIN pad)

Field	Length	Value and description
<STX>	1	<02>
P07	3	Message ID
[Sector number]	2	The sector number. Decimal string: 00~39.
[Key type]	1	(optional) Determine which card type to authenticate. Format: 'A' or 'B'.
[Key value]	12	(optional) The card will be authenticated with this key value. Format: hexadecimal string.
<ETX>	1	<03>
[LRC]	1	Checksum

Request frame (HOST to PIN pad)

Field	Length	Value and description
<STX>	1	<02>
P07	3	Message ID
[Sector number]	2	The sector number. Decimal string: 00~39.

[Key number]	3	The key stored in PIN pad. Decimal string: 000~255.
[Key type]	1	Determine which card type to authenticate. Format: 'A' or 'B'.
<ETX>	1	<03>
[LRC]	1	Checksum

Response frame (PIN pad to HOST)

Field	Length	Value and description
<STX>	1	<02>
P07	3	Message ID
[Result]	1	'0': Success. '1': Fail.
[Reason]	1	Optional: if [Result] = '1' '1': Format error. '2': Sequence error. '3': Key authentication fail.
<ETX>	1	<03>
[LRC]	1	Checksum

Message flow:

HOST	Direction	PIN pad
Message P07 (request frame)	→	
	←	<ACK> (Good LRC) <NAK> (Bad LRC) <EOT> (after 3 NAKs)
	←	Message P07 (response frame)
<ACK> (Good LRC) <NAK> (Bad LRC) <EOT> (after 3 NAKs)	→	

Message P08 MIFARE Ultralight Card Read Page

Format: **<STX>P08[page number]<ETX>[LRC] (request frame)**

<STX>P08[Result][Page data][Reason]<ETX>[LRC] (response frame)

Message length: Fixed 8 ytes for request frame

Fixed 8 or 15 bytes for response frame.

Usage: Read the block data.

Message element:

Request frame (HOST to PIN pad)

Field	Length	Value and description
<STX>	1	<02>
P08	3	Message ID
[page number]	2	The page number. Decimal string: 00~47.
<ETX>	1	<03>
[LRC]	1	Checksum

Response frame (PIN pad to HOST)

Field	Length	Value and description
<STX>	1	<02>
P08	3	Message ID
[Result]	1	'0': Success. '1': Fail.
[page data]	8.	Optional: if [Result] = '0' The page data. Format: hexadecimal string.
[Reason]	1	Optional: if [Result] = '1' '1': Format error. '2': Sequence error. '3': Read data fail.
<ETX>	1	<03>
[LRC]	1	Checksum

Message flow:

HOST	Direction	PIN pad
Message P08 (request frame)	→	
	←	<ACK> (Good LRC) <NAK> (Bad LRC) <EOT> (after 3 NAKs)
	←	Message P08 (response frame)
<ACK> (Good LRC) <NAK> (Bad LRC) <EOT> (after 3 NAKs)	→	

Message P09 MIFARE Ultralight Card Write Page

Format: **<STX>P09[page number][page data]<ETX>[LRC] (request frame)**

<STX>P09[Result][Reason]<ETX>[LRC] (response frame)

Message length: Fixed 16 ytes for request frame

Fixed 7 or 8 bytes for response frame.

Usage: Write the data to the specific block.

Message element:

Request frame (HOST to PIN pad)

Field	Length	Value and description
<STX>	1	<02>
P09	3	Message ID
[page number]	2	The page number. Decimal string: 00~47.
[page data]	8	The page data will write to MIFARE card. Format: hexadecimal string.
<ETX>	1	<03>
[LRC]	1	Checksum

Response frame (PIN pad to HOST)

Field	Length	Value and description
<STX>	1	<02>
P09	3	Message ID
[Result]	1	'0': Success. '1': Fail.
[Reason]	1	Optional: if [Result] = '1' '1': Format error. '2': Sequence error. '3': Write data fail.
<ETX>	1	<03>
[LRC]	1	Checksum

Message flow:

HOST	Direction	PIN pad
Message P09 (request frame)	→	
	←	<ACK> (Good LRC) <NAK> (Bad LRC) <EOT> (after 3 NAKs)
	←	Message P09 (response frame)
<ACK> (Good LRC) <NAK> (Bad LRC) <EOT> (after 3 NAKs)	→	

Message P10 MIFARE Classic/Ultralight Card Read Block

Format: **<STX>P10[Block number]<ETX>[LRC] (request frame)**

<STX>P10[Result][Block data][Reason]<ETX>[LRC] (response frame)

Message length: Fixed 9 bytes for request frame

Fixed 8 or 39 bytes for response frame.

Usage: Read the block data.

Message element:

Request frame (HOST to PIN pad)

Field	Length	Value and description
<STX>	1	<02>
P10	3	Message ID
[Block number]	3	The block number. Decimal string: 000~255.
<ETX>	1	<03>
[LRC]	1	Checksum

Response frame (PIN pad to HOST)

Field	Length	Value and description
<STX>	1	<02>
P10	3	Message ID
[Result]	1	'0': Success. '1': Fail.
[Block data]	32.	Optional: if [Result] = '0' The block data. Format: hexadecimal string.
[Reason]	1	Optional: if [Result] = '1' '1': Format error. '2': Sequence error. '3': Read data fail.
<ETX>	1	<03>
[LRC]	1	Checksum

Message flow:

HOST	Direction	PIN pad
Message P10 (request frame)	→	
	←	<ACK> (Good LRC) <NAK> (Bad LRC) <EOT> (after 3 NAKs)
	←	Message P10 (response frame)
<ACK> (Good LRC) <NAK> (Bad LRC) <EOT> (after 3 NAKs)	→	

Message P11 MIFARE Classic/Ultralight Card Write Block

Format: **<STX>P11[Block number][Block data]<ETX>[LRC] (request frame)**

<STX>P11[Result][Reason]<ETX>[LRC] (response frame)

Message length: Fixed 41 bytes for request frame

Fixed 7 or 8 bytes for response frame.

Usage: Write the data to the specific block.

Message element:

Request frame (HOST to PIN pad)

Field	Length	Value and description
<STX>	1	<02>
P11	3	Message ID
[Block number]	3	The block number. Decimal string: 000~255.
[Block data]	32	The block data will write to MIFARE card. Format: hexadecimal string.
<ETX>	1	<03>
[LRC]	1	Checksum

Response frame (PIN pad to HOST)

Field	Length	Value and description
<STX>	1	<02>
P11	3	Message ID
[Result]	1	'0': Success. '1': Fail.
[Reason]	1	Optional: if [Result] = '1' '1': Format error. '2': Sequence error. '3': Write data fail.
<ETX>	1	<03>
[LRC]	1	Checksum

Message flow:

HOST	Direction	PIN pad
Message P11 (request frame)	→	
	←	<ACK> (Good LRC) <NAK> (Bad LRC) <EOT> (after 3 NAKs)
	←	Message P11 (response frame)
<ACK> (Good LRC) <NAK> (Bad LRC) <EOT> (after 3 NAKs)	→	

Message P12 MIFARE Classic/Ultralight Card Read Sector

Format: **<STX>P12[Sector number]<ETX>[LRC] (request** frame)

<STX>P12[Result][Sector data][Reason]<ETX>[LRC]

(response frame)

Message length: Fixed 8 bytes for request frame

Variable for response frame.

Usage: Read a sector data from MIFARE card.

NOTE: For MIFARE Classic 4K, sector 0~31 contains 4 blocks each and sectors 32~39 contains 16 blocks each.

Message element:

Request frame (HOST to PIN pad)

Field	Length	Value and description
<STX>	1	<02>
P12	3	Message ID
[Sector number]	2	The sector number. Decimal string: 00~39.
<ETX>	1	<03>
[LRC]	1	Checksum

Response frame (PIN pad to HOST)

Field	Length	Value and description
<STX>	1	<02>
P12	3	Message ID
[Result]	1	'0': Success. '1': Fail.
[Sector data]	128 or 512	Optional: if [Result] = '0' The Sector data. Format: hexadecimal string.
[Reason]	1	Optional: if [Result] = '1' '1': Format error. '2': Sequence error. '3': Read data fail.
<ETX>	1	<03>
[LRC]	1	Checksum

Message flow:

HOST	Direction	PIN pad
Message P12 (request frame)	→	
	←	<ACK> (Good LRC) <NAK> (Bad LRC) <EOT> (after 3 NAKs)
	←	Message P12 (response frame)
<ACK> (Good LRC) <NAK> (Bad LRC) <EOT> (after 3 NAKs)	→	

Message P13 MIFARE Classic/Ultralight Card Write Sector

Format: **<STX>P13[Sector number][Sector data]<ETX>[LRC] (request frame)**

<STX>P13[Result][Reason]<ETX>[LRC] (response frame)

Message length: Variable for request frame

Fixed 7 or 8 bytes for response frame.

Usage: Write a sector data to MIFARE card.

NOTE: ultra light card -

sector 0: 48 bytes (96 bytes hexadecimal string).

ultra light C card -

sector 1: 64 bytes. (128 bytes hexadecimal string).

sector 2: 32 bytes. (64 bytes hexadecimal string).

classic 1K card and classic 4K card -

sector 0: 32 bytes. (64 bytes hexadecimal string).

sector 1-31: 48 bytes. (96 bytes hexadecimal string).

classic 4K card -

sector 32-39: 240 bytes. (480 bytes hexadecimal string).

Message element:

Request frame (HOST to PIN pad)

Field	Length	Value and description
<STX>	1	<02>
P13	3	Message ID
[Sector number]	2	The sector number. Decimal string: 00~39.
[Sector data]	64 or 96 or 128 or 480	The data will write to MIFARE card. Format: hexadecimal string.
<ETX>	1	<03>
[LRC]	1	Checksum

Response frame (PIN pad to HOST)

Field	Length	Value and description
<STX>	1	<02>
P13	3	Message ID
[Result]	1	'0': Success. '1': Fail.
[Reason]	1	Optional: if [Result] = '1' '1': Format error. '2': Sequence error. '3': Write sector fail.
<ETX>	1	<03>
[LRC]	1	Checksum

Message flow:

HOST	Direction	PIN pad
Message P13 (request frame)	→	
	←	<ACK> (Good LRC) <NAK> (Bad LRC) <EOT> (after 3 NAKs)
	←	Message P13 (response frame)
<ACK> (Good LRC) <NAK> (Bad LRC) <EOT> (after 3 NAKs)	→	

Message P14 MIFARE Classic Card Value Operation

Format: **<STX>P14[Block number][Op mode][Value][Transfer block]**
<ETX>[LRC] (request frame)
<STX>P14[Result][Reason]<ETX>[LRC] (response frame)

Message length: Fixed 13, 18 or 21 bytes for request frame
Fixed 7 or 8 bytes for response frame.

Usage: Value operation with block data.

Message element:

Request frame (HOST to PIN pad)

Field	Length	Value and description
<STX>	1	<02>
P14	3	Message ID
[Block number]	3	The block number. Decimal string: 000~255.
[op mode]	1	Operation mode: '0' = Create MIFARE Value block. '1' = Decrement. '2' = Increment. '3' = Copy block.
[Value]	8	(Optional), if [op mode] != '3' Value blocks allow performing electronic purse functions. Format: hexadecimal string (signed integer). Ex : 1234567_d = 00 12 D6 87
[Transfer block]	3	(Optional), if [op mode] != '0' The block number. Decimal string: 000~255.
<ETX>	1	<03>
[LRC]	1	Checksum

Response frame (PIN pad to HOST)

Field	Length	Value and description
<STX>	1	<02>
P14	3	Message ID
[Result]	1	'0': Success. '1': Fail.
[Reason]	1	Optional: if [Result] = '1' '1': Format error. '2': Sequence error. '3': Create value block fail. '4': Value restore fail. '5': Value operation fail. '6': Value transfer fail.
<ETX>	1	<03>
[LRC]	1	Checksum

Message flow:

HOST	Direction	PIN pad
Message P14 (request frame)	→	
	←	<ACK> (Good LRC) <NAK> (Bad LRC) <EOT> (after 3 NAKs)
	←	Message P14 (response frame)
<ACK> (Good LRC) <NAK> (Bad LRC) <EOT> (after 3 NAKs)	→	

Message P15 Load MIFARE key

Format: **<STX>P15[Key number][Key A value][Key B value]<ETX>[LRC] (request frame)**

<STX>P15[Result][Reason]<ETX>[LRC] (response frame)

Message length: Fixed 33 bytes for request frame

Fixed 7 or 8 bytes for response frame.

Usage: PIN pad can save up to 256 key sets for MIFARE Classic card application.

Message element:

Request frame (HOST to PIN pad)

Field	Length	Value and description
<STX>	1	<02>
P15	3	Message ID
[Key number]	3	The key unique number. Range:'000'~'255'
[Key A value]	12	The key A data will store in PIN pad.
[Key B value]	12	The key B data will store in PIN pad.
<ETX>	1	<03>
[LRC]	1	Checksum

Response frame (PIN pad to HOST)

Field	Length	Value and description
<STX>	1	<02>
P15	3	Message ID
[Result]	1	'0': Success. '1': Fail.
[Reason]	1	Optional: if [Result] = '1' '1': Format error. '2': Load MIFARE key fail.
<ETX>	1	<03>
[LRC]	1	Checksum

Message flow:

HOST	Direction	PIN pad
Message P15 (request frame)	→	
	←	<ACK> (Good LRC) <NAK> (Bad LRC) <EOT> (after 3 NAKs)
	←	Message P15 (response frame)
<ACK> (Good LRC) <NAK> (Bad LRC) <EOT> (after 3 NAKs)	→	

Message P16 Identify MIFARE Card Type

Format: **<STX>P16<ETX>[LRC] (request frame)**

<STX>P16[Result][Card type][Reason]<ETX>[LRC] (response frame)

Message length: Fixed 6 bytes for request frame

Fixed 8 bytes for response frame.

Usage: This command reports MIFARE card type.

Message element:

Request frame (HOST to PIN pad)

Field	Length	Value and description
<STX>	1	<02>
P16	3	Message ID
<ETX>	1	<03>
[LRC]	1	Checksum

Response frame (PIN pad to HOST)

Field	Length	Value and description
<STX>	1	<02>
P16	3	Message ID
[Result]	1	'0': Success. '1': Fail.
[Card type]	1	Optional: if [Result] = '0' '0': Not MIFARE card or not supported card. '1': MIFARE Ultralight. '2': MIFARE Classic 1K. '3': MIFARE Classic 4K. '4': MIFARE DESFire. '5': MIFARE Plus '6': MIFARE Mini. '7': MPCOS Gemplus. '8': Jewel for Innovision. '9': JCOP31.
[Reason]	1	Optional: if [Result] = '1' '1': Format error. '2': Sequence error.

		'3': Card detect fail.
<ETX>	1	<03>
[LRC]	1	Checksum

Message flow:

HOST	Direction	PIN pad
Message P16 (request frame)	→	
	←	<ACK> (Good LRC) <NAK> (Bad LRC) <EOT> (after 3 NAKs)
	←	Message P16 (response frame)
<ACK> (Good LRC) <NAK> (Bad LRC) <EOT> (after 3 NAKs)	→	

Message P17 MIFARE DESfire Card Activation

Format: **<STX>P17<ETX>[LRC] (request frame)**

<STX>P17[Result][ATS/PUPI][Reason]<ETX>[LRC] (response frame)

Message length: Fixed 6 bytes for request frame

Variable for response frame.

Usage: This command will activate PICC card.

Message element:

Request frame (HOST to PIN pad)

Field	Length	Value and description
<STX>	1	<02>
P17	3	Message ID
<ETX>	1	<03>
[LRC]	1	Checksum

Response frame (PIN pad to HOST)

Field	Length	Value and description
<STX>	1	<02>
P17	3	Message ID
[Result]	1	'0': Success. '1': Fail.
[ATS/PUPI]	Var.	Optional: if [Result] = '0'
[Reason]	1	Optional: if [Result] = '1' '1': Format error. '2': Sequence error. '3': Card activate fail.
<ETX>	1	<03>
[LRC]	1	Checksum

Message flow:

HOST	Direction	PIN pad
Message P17 (request frame)	→	
	←	<ACK> (Good LRC) <NAK> (Bad LRC) <EOT> (after 3 NAKs)
	←	Message P17 (response frame)
<ACK> (Good LRC) <NAK> (Bad LRC) <EOT> (after 3 NAKs)	→	

Message P18 MIFARE DESfire Card Deselect

Format: **<STX>P18<ETX>[LRC] (request frame)**

<STX>P18[Result][Reason]<ETX>[LRC] (response frame)

Message length: Fixed 6 bytes for request frame

Fixed 7 or 8 bytes for response frame.

Usage: Sends ISO/IEC 14443-4 DESELECT command to the card. After the card receive DESELECT command, the card will be brought to the HALT state.

Message element:

Request frame (HOST to PIN pad)

Field	Length	Value and description
<STX>	1	<02>
P18	3	Message ID
<ETX>	1	<03>
[LRC]	1	Checksum

Response frame (PIN pad to HOST)

Field	Length	Value and description
<STX>	1	<02>
P18	3	Message ID
[Result]	1	'0': Success. '1': Fail.
[Reason]	1	Optional: if [Result] = '1' '1': Format error. '2': Sequence error. '3': DESELECT execute fail.
<ETX>	1	<03>
[LRC]	1	Checksum

Message flow:

HOST	Direction	PIN pad
Message P18 (request frame)	→	
	←	<ACK> (Good LRC) <NAK> (Bad LRC) <EOT> (after 3 NAKs)
	←	Message P18 (response frame)
<ACK> (Good LRC) <NAK> (Bad LRC) <EOT> (after 3 NAKs)	→	

Message P19 I/O to MIFARE card with APDU format

Format: **<STX>P19[C-APDU]<ETX>[LRC] (request frame)**

<STX>P19[Result][R-APDU][Reason]<ETX>[LRC] (response frame)

Message length: variable.

Usage: The command is used to pass an APDU to the card where both data and an ISO status are expected in the response.

Note: 1. The APDU(Application Protocol Data Unit) format defined in ISO/IEC 7816-4 chapter 5. Below brief the command and response APDU.

C-APDU format

CLA	INS	P1	P2	Lc	Data	Le

R-APDU format

Data(Optional)	SW1-SW2

Message element:

Request frame (HOST to PIN pad)

Field	Length	Value and description
<STX>	1	<02>
P19	3	Message ID
[C-APDU]	Var.	Command APDU. The C-APDU format please see Note 1.
<ETX>	1	<03>
[LRC]	1	Checksum

Response frame (PIN pad to HOST)

Field	Length	Value and description
<STX>	1	<02>
P19	3	Message ID
[Result]	1	'0': Success. '1': Fail.
[R-APDU]	Var.	Optional: if [Result] = '0' The R-APDU format please see Note 1.
[Reason]	1	Optional: if [Result] = '1' '1': Format error. '2': Sequence error. '3': APDU fail.
<ETX>	1	<03>

[LRC]	1	Checksum

Message flow:

HOST	Direction	PIN pad
Message P19 (request frame)	→	
	←	<ACK> (Good LRC) <NAK> (Bad LRC) <EOT> (after 3 NAKs)
	←	Message P19 (response frame)
<ACK> (Good LRC) <NAK> (Bad LRC) <EOT> (after 3 NAKs)	→	

Message P20 I/O to MIFARE card for block data exchange

Format: **<STX>P20[CRC mode][Wait time][Block data]<ETX>[LRC]**

(request frame)

<STX>P20[Result][Block data][Reason]<ETX>[LRC]

(response frame)

Message length: variable.

Usage: The command is used to pass a block data to a card.

Note: 1. The format of block data defined in ISO/IEC 14443-4 chapter 7.

Message element:

Request frame (HOST to PIN pad)

Field	Length	Value and description
<STX>	1	<02>
P20	3	Message ID
[CRC mode]	1	'0' : No CRC in [block data]. '1' : [Block data] contain CRC.
[Wait time]	4	The time out value for card response.
[Block data]	Var.	Format: hexadecimal string. The command use block format as defined in ISO 14443-4.
<ETX>	1	<03>
[LRC]	1	Checksum

Response frame (PIN pad to HOST)

Field	Length	Value and description
<STX>	1	<02>
P20	3	Message ID
[Result]	1	'0': Success. '1': Fail.
[Block data]	Var.	Optional: if [Result] = '0' The card response data with block format as defined in ISO 14443-4.
[Reason]	1	Optional: if [Result] = '1' '1': Format error. '2': Sequence error. '3': Data exchange fail.
<ETX>	1	<03>
[LRC]	1	Checksum

Message flow:

HOST	Direction	PIN pad
Message P20(request frame)	→	
	←	<ACK> (Good LRC) <NAK> (Bad LRC) <EOT> (after 3 NAKs)
	←	Message P20 (response frame)
<ACK> (Good LRC) <NAK> (Bad LRC) <EOT> (after 3 NAKs)	→	

Overall MIFARE operation flow reference

Before any memory operation for MIFARE card, user need to activate the card as follows.

Ref. 1 Activate and authenticate for MIFARE classic card.

HOST	Direction	PIN pad
P01 (Enable Mifare)	→	
	←	P01 (Response Frame)
P02 (Query MIFARE Presence)	→	
	←	P02 (Response Frame)
P03 (Anti-collision)	→	
	←	P03 (Response Frame)
P04 (Selection)	→	
	←	P04 (Response Frame)
P16 (Identify MIFARE Card Type)	→	
	←	P16 (Response Frame) '2': MIFARE Classic 1K. '3': MIFARE Classic 4K.
P07 (Classic Card Authentication)	→	
	←	P07 (Response Frame)
Now, user can access memory operation for MIFRE card(like P10, P11, P12, P13, P14)	→	
	←	The response of memory operation command.
P06 (Card HALT)	→	
	←	P06 (Response Frame)
P01 (Disable Mifare)	→	
	←	P01 (Response Frame)

Ref. 2 The quick method for activating classic card.

HOST	Direction	PIN pad
P01 (Enable Mifare)	→	
	←	P01 (Response Frame)
P05 (Classic Card Activation)	→	
	←	P05 (Response Frame)
P16 (Identify MIFARE Card Type)	→	
	←	P16 (Response Frame) '2': MIFARE Classic 1K. '3': MIFARE Classic 4K.
P07 (Classic Card Authentication)	→	
	←	P07 (Response Frame)
Now, user can access memory operation for MIFRE card(like P10, P11, P12, P13, P14)	→	
	←	The response of memory operation command.
P06 (Card HALT)	→	
	←	P06 (Response Frame)
P01 (Disable Mifare)	→	
	←	P01 (Response Frame)

Ref. 3 Activate and authenticate for MIFARE Ultralight card.

HOST	Direction	PIN pad
P01 (Enable Mifare)	→	
	←	P01 (Response Frame)
P02 (Query MIFARE Presence)	→	
	←	P02 (Response Frame)
P03 (Anti-collision)	→	
	←	P03 (Response Frame)
P04 (Selection)	→	
	←	P04 (Response Frame)
P16 (Identify MIFARE Card Type)	→	
	←	P16 (Response Frame) '1': MIFARE Ultralight.
Now, user can access memory operation for MIFRE card(like P08, P09, P10, P11, P12, P13)	→	
	←	The response of memory operation command.
P06 (Card HALT)	→	
	←	P06 (Response Frame)
P01 (Disable Mifare)	→	
	←	P01 (Response Frame)

Ref. 4 The quick method for activating Ultralight card.

HOST	Direction	PIN pad
P01 (Enable Mifare)	→	
	←	P01 (Response Frame)
P05 (Ultralight Card Activation)	→	
	←	P05 (Response Frame)
P16 (Identify MIFARE Card Type)	→	
	←	P16 (Response Frame) '1': MIFARE Ultralight.
Now, user can access memory operation for MIFRE card(like P08, P09, P10, P11, P12, P13)	→	
	←	The response of memory operation command.
P06 (Card HALT)	→	
	←	P06 (Response Frame)
P01 (Disable Mifare)	→	
	←	P01 (Response Frame)

Ref. 5 Activating for DESFire card

HOST	Direction	PIN pad
P01 (Enable Mifare)	→	
	←	P01 (Response Frame)
P17 (DESfire Card Activation)	→	
	←	P17 (Response Frame)
P16 (Identify MIFARE Card Type)	→	
	←	P16 (Response Frame) '4': MIFARE DESFire.
P19、P20 (Request frame)	→	
	←	P19、P20 (Response Frame)
P18 (DESfire Card Deselect)	→	
	←	P18 (Response Frame)
P01 (Disable Mifare)	→	
	←	P01 (Response Frame)

Section 9 Online transaction messages with Master/Session Keys (MK/SK)

Message 70 PIN entry request (MK/SK)

Format: **<STX>70.[Account]<FS>[session key][Amount]**
<FS>[timeout]<ETX>[LRC]

Message length: Variable 36 to 51 bytes (max. 67 bytes for TDES session key).

Usage: Display prompt and accept customer PIN input. The following prompt will be displayed:

```
"Total Amount"
 "$xxx.xx"
 "Enter PIN"
 "Push "ENTER""
```

The PIN pad will then wait till the PIN entered and [ENTER] key is pressed. After ENTER key is pressed, the string "PIN PAD" and "PROCESSING" will be displayed until the CLEAR key is pressed. During this period, the PIN pad will not process any message other than the CANCEL message (message 72).

NOTE: **Aborting transaction:** Press CLEAR button to reset the PIN input and CAN (cancel) button to abort the transaction.

PIN length: According to ANSI X9.8 standard, the length of PIN should between 4 to 12 digits. If user inputs less than 4 digits and press ENTER, PP791 will beep for error and continue to wait for user's input. When user inputs 13th character, PIN pad will beep for error, conserves PIN character 1st to 12th, and wait for ENTER.

This message has DES Time Throttle: See Appendix A for details.

Master key must be selected before transaction: PP791 will warn and refuse message 70 if message 08 was not issued before.

Triple DES capability: Following table shows the logic of PP791 when processing single-length and double-length MK/SK. (TDES in EDE order, see Appendix A).

Session Key: If the selected key is with usage "P0", the session key should be all zeros.

Session key / Master key	Double length	Single length
Double length	PP791 TDES decrypts L-key and R-key of [session key] value, using active master key. PIN blocks are TDES encrypted by decrypted session key.	PP791 TDES decrypts [session key] value, using active master key. PIN blocks are DES encrypted by decrypted session key.

Single length	PP791 DES decrypts L-key and R-key of [session key] value, using active master key. PIN blocks are TDES encrypted by session key.	PP791 DES decrypts [session key] value, using active master key. PIN blocks are DES encrypted by session key.

Message element:

Field	Length	Value and description
<STX>	1	<02>
70	2	Message ID
.	1	<2E>, delimiter
[Account]	8..19	Card account number
<FS>	1	<1C>, field separator
[session key]	16 or 32	Working key encrypted using selected master key. 32-characters session key produces TDES encrypted PIN block with EDE order. Format: hexadecimal string. This filed should be all zeros if the selected key is with usage "P0"
[Amount]	4..8	Amount of goods to be displayed on PIN pad.
<FS>	1	(optional) <1C>, field separator
[timeout]	1	(optional) ASCII character from '1' to '9' which is the timeout value in the unit of 30 seconds. Default = 9x30 = 270 seconds.
<ETX>	1	<03>
[LRC]	1	Checksum

Message flow:

HOST	Direction	PIN pad
Message 70	→	
	←	<ACK> (Good LRC) <NAK> (Bad LRC) <EOT> (after 3 NAKs) Prompt user to enter PIN.
	←	Message 71 or <EOT> when input timed out or user pressed [CAN]
<ACK> (Good echo) <NAK> (Bad LRC) <EOT> (after 3 NAKs)	→	
		Display "PIN PAD PROCESSING" until CLEAR pressed or another message received.

Message 71 Encrypted PIN Block Response

Format: **<STX>71.<fkey flag><PIN length>01[PIN][LRC] (PIN block frame)**

<STX>71[error code]<ETX>[LRC] (Error code frame)

Message length: Fixed 27 bytes for PIN block frame, 6 bytes for error code frame.

Usage: Send the entered PIN to HOST in encrypted format.

Message element:

Field	Length	Value and description
<STX>	1	<02>
71	2	Message ID
.	1	<2E> delimiter
[Fkey flag]	1	Always '0' (This field is kept to retain old model compatibility.)
[PIN length]	2	00, 04..12 length of PIN entered
01	2	01 format of PIN block, always 01
[PIN]	16	Encrypted PIN blocks Format: hexadecimal string.
<ETX>	1	<03>
[LRC]	1	Checksum

Message 71 (Error message)

Field	Length	Value and description
<STX>	1	<02>
71	2	Message ID
[Error code]	1	Code to indicate error (see next page)
<ETX>	1	<03>
[LRC]	1	Checksum

Message flow:

HOST	Direction	PIN pad
Message 70/Z60/Z62	→	
	←	<ACK> (Good LRC) <NAK> (Bad LRC) <EOT> (after 3 NAKs)
	←	Message 71 or <EOT> when input tined out or user pressed [CAN]
<ACK> (Good echo) <NAK> (Bad LRC) <EOT> (after 3 NAKs)	→	
		Display processing prompt

Error codes:

Code	Meaning
'0'	Null Account input field.
'1'	Key value error. (session key value conflicted with the usage of active master key, or session key length longer than active master key)
'2'	Account number shorter than 8 digits.
'3'	Account number longer than 19 digits.
'4'	Account number have character other than '0'-'9'.
'5'	Working key format error.
'6'	Timeout value error
'7'	No more DES operation within 60 min. (see Appendix A)
'8'	From 70, Amount string format error. From Z62, PIN count, Accept Null PIN flag, and Prompt string format error.
'9'	Active master key not exist.
'A'	Currently selected master key over range (Master key slot A to F will cause this error message because they are supposed to do authentication and MAC, not for PIN entry)
'B'	Flash memory read/write error
'C'	Memory buffer allocation error
'E'	Data length error in a field.
'G'	Specified file not found or authentication error.

Message 72 PIN Entry Cancel

Format: **<STX>72<ETX>[LRC]**

Message length: Fixed 5 bytes.

Usage: Cancel current transaction and return the PIN pad to IDLE state, used to interrupt command in process. If PIN pad receives message 72 while processing user input such as swipe card, enter PIN or key-in data, It will respond with <EOT> to acknowledge that operation is canceled.

Message element:

Field	Length	Value and description
<STX>	1	<02>
72	2	Message ID
<ETX>	1	<03>
[LRC]	1	Checksum

Message flow:

In Idle mode (normal condition)

HOST	Direction	PIN Pad
Message 72	→	
	←	<ACK> (Good LRC) <NAK> (Bad LRC) <EOT> (after 3 NAKs)

In PIN/data entry mode (cancel/abort the session)

HOST	Direction	PIN Pad
Message 72	→	
	←	<EOT> If PIN pad is in PIN/Data entry mode or waiting for tapping/swiping card.

Message Z0 Move Display Cursor

Format: **<STX>Z0[YY]<ETX>[LRC]**

Message length: Fixed 7 bytes.

Usage: Move the display cursor. Z0 message is enabled when PIN pad receives first Z2 message. **Under Z2-authenticated mode, Z0 message is also disabled.**

Message element:

Field	Length	Value and description
<STX>	1	<02>
Z0	2	Message ID
[YY]	2	Y-coordinate, 01 ~ Max. line
<ETX>	1	<03>
[LRC]	1	Checksum

Message flow:

HOST	Direction	PIN pad
Message Z2	→	
	←	<ACK> (Good LRC) <NAK> (Bad LRC) <EOT> (after 3 NAKs)
		Display string.
Message Z0	→	
	←	<ACK> / <NAK> / <EOT>
		PIN pad moves cursor
Message Z2 (without clear screen)	→	
	←	<ACK> / <NAK> / <EOT>
		Display 2nd string from the coordinate specified by Z0.

Message Z1 Reset State

Format: **<STX>Z1<ETX>[LRC]**

Message length: Fixed 5 bytes.

Usage: Force the PIN pad to enter IDLE state.

This command also reset magnet card swiping command Q1, Q8, Q9 and QF.

Message element:

Field	Length	Value and description
<STX>	1	<02>
Z1	2	Message ID
<ETX>	1	<03>
[LRC]	1	Checksum

Message flow:

HOST	Direction	PIN pad
Message Z1	→	
	←	<ACK> (Good LRC) <NAK> (Bad LRC) <EOT> (after 3 NAKs)

Message Z2 Display String

Format: **<STX>Z2<SUB>[string]<ETX>[LRC] (Request frame, normal)**

<STX>Z2<GS>[PromptID]<SUB><ETX>[LRC]

(Request frame, authenticated)

<STX>Z2<RS>[PromptID]<SUB><ETX>[LRC]

(Request frame, authenticated for PIN entry)

<STX>Z2[status]<ETX>[LRC]

(Response frame, authenticated)

Message length: Variable, at least 6 bytes.

Usage: PIN pad to show the indicated prompt string on its display, until [CAN] key is pressed. If the first character of message is <GS> (0x1D) or <RS> (0x1E), PIN pad will treat following message string as ID number, and search its predefined message table for corresponding message string, then display the string on the screen.

Note: 1. Two Z2 message with authenticated prompt ID can be issued in serial to form a longer sentence, or used in combination with normal string which contains only digits.

2. Z2 message with PIN entry prompt will force user issue every message with <SUB>, which implies the PIN entry message can't be concatenated.

3. PIN pad will temporarily turn off timer display for the first Z2 message it received. After Z42, Z50, Z60 are performed, [CAN] key is pressed, or any other message received and processed, PIN pad will turn on the timer display.

Message element:

Z2 request frame (normal mode)

Field	Length	Value and description
<STX>	1	<02>
Z2	2	Message ID
<SUB>	1	<1A> (optional) When <SUB> exists, PIN pad will clear screen contents.
[string]	1 .. 64	ASCII string to be displayed
<ETX>	1	<03>
[LRC]	1	Checksum

Z2 request frame (authenticated mode with fixed prompt)

Field	Length	Value and description
<STX>	1	<02>
Z2	2	Message ID
<GS>	1	<1D>, mark of authenticated frame with fixed prompt.
Prompt ID	3	Prompt ID that corresponds to fixed prompt provided by PIN pad. Decimal string: 001 ~ 999.
<SUB>	1	<1A> (optional) When <SUB> exists, PIN pad will clear screen contents.
<ETX>	1	<03>
[LRC]	1	Checksum

Z2 request frame (PIN entry mode with fixed prompt)

Field	Length	Value and description
<STX>	1	<02>
Z2	2	Message ID
<RS>	1	<1E>, mark of PIN entry frame with fixed prompt.
Prompt ID	3	Prompt ID that corresponds to fixed PIN entry prompt provided by PIN pad. Decimal string: 001 ~ 999.
<SUB>	1	<1A> PIN pad will clear clear screen contents.
<ETX>	1	<03>
[LRC]	1	Checksum

Z2 response frame (authenticated mode)

Field	Length	Value and description
<STX>	1	<02>
Z2	2	Message ID
[status]	1	'0': OK '1': Prompt ID not supported.
<ETX>	1	<03>
[LRC]	1	Checksum

Message flow:

Normal frame

HOST	Direction	PIN pad
Message Z2	→	
	←	<ACK> (Good LRC) <NAK> (Bad LRC) <EOT> (after 3 NAKs)
		Display string

Authenticated frame

HOST	Direction	PIN pad
Message Z2	→	
	←	<ACK> (Good LRC) <NAK> (Bad LRC) <EOT> (after 3 NAKs)
	←	Message Z2 (response frame)
<ACK> (Good LRC) <NAK> (Bad LRC) <EOT> (after 3 NAKs)	→	
	←	Display string <EOT> (if received <ACK>)

Message Z3 Display Line Prompts

Format: **<STX>Z3[count]<SUB>[prompt1]<FS>[prompt2..7]<ETX>[LRC]**

(Request frame, normal)

<STX>Z3<GS>[PromptID1]<FS>[PromptID2..7]<SUB><ETX>[LRC]

(Request frame, authenticated)

<STX>Z3<RS>[PromptID1]<FS>[PromptID2..7]<ETX>[LRC]

(Request frame, authenticated for PIN entry)

<STX>Z3[status] <ETX>[LRC]

(Response frame, authenticated)

Message length: Variable 8 to 124 bytes.

Usage: The PIN pad will display the received prompt strings (up to 7 lines of prompt). If the length of prompt exceeds the maximum characters per line, this prompt will be truncated.

Message element:

Z3 request frame (normal mode)

Field	Length	Value and description
<STX>	1	<02>
Z3	2	Message ID
[Count]	1	Number of prompts to be displayed
<SUB>	1	<1A> (optional) When <SUB> exists, PIN pad will clear clear screen contents.
[Prompt1]	var	First string to be displayed.
<FS>	1	<1C>, field separator
[Prompt2..7]	var	Remaining strings to be displayed. Note. <FS> is required between messages
<ETX>	1	<03>
[LRC]	1	Checksum

Z3 request frame (authenticated mode or PIN entry mode)

Field	Length	Value and description
<STX>	1	<02>
Z3	2	Message ID
<GS> or <RS>	1	<1D> for authenticated mode <1E> for PIN entry mode (In these mode, PIN Pad will clear screen content.)
[Prompt ID1]	3	Prompt ID that corresponds to fixed prompt provided by PIN pad. Decimal string: 001 ~ 999.
<FS>	1	<1C>, field separator
[Prompt ID2..7]	3	Prompt ID that corresponds to fixed prompt provided by PIN pad. Decimal string: 001 ~ 999. Note. <FS> is required between prompt ID.
<ETX>	1	<03>
[LRC]	1	Checksum

Z3 response frame (authenticated mode)

Field	Length	Value and description
<STX>	1	<02>
Z3	2	Message ID
[status]	1	'0': OK '1': Prompt ID not supported.
<ETX>	1	<03>
[LRC]	1	Checksum

Message flow:

Normal frame

HOST	Direction	PIN Pad
Message Z3	→	
	←	<ACK> (Good LRC) <NAK> (Bad LRC) <EOT> (after 3 NAKs)
		Display prompts as required

Authenticated frame

HOST	Direction	PIN Pad
Message Z3	→	
	←	<ACK> (Good LRC) <NAK> (Bad LRC) <EOT> (after 3 NAKs)
	←	Message Z3 (response frame)
<ACK> (Good LRC) <NAK> (Bad LRC) <EOT> (after 3 NAKs)	→	
	←	Display string <EOT> (if received <ACK>)

Z2 / Z3 Authenticated mode with fixed prompt

To enable message Z42 and Z50, user has to issue Z2 / Z3 message with a prompt ID supported by PIN pad (See ***Appendix H***). These prompts are verified during Payment Card Industry (PCI) Security Conformance tests to make sure users will not expose sensitive information (such as PIN) accidentally.

For security reason, to issue authenticated frame of Z2 / Z3 at the first time, the <SUB> flag is mandatory. After Z2 authenticated mode entered, PIN pad will accept two kind of Z2 packet:

1. Z2 packet in normal mode, without <SUB> flag, and contains only digits (0~9)
2. Z2 packet in authenticated mode, without <SUB> flag.

For example, issue Z2<GS>005<SUB> and Z2<GS>016 will show "PLEASE ENTER DRIVER LICENSE" on the screen.

Z2 / Z3 PIN entry mode with fixed prompt

To enable Z60, user has to issue Z2 / Z3 message with a prompt ID supported by PIN pad, dedicated for PIN entry (See ***Appendix I***). These prompts are verified during Payment Card Industry (PCI) Security Conformance tests to make sure users will not misunderstand PIN entry request as other non-sensitive data. Also message Z62's prompt1 and prompt2 will be checked to see if they are listed in this prompt table. If not, PIN pad will reject Z62.

Any other messages other than Z2, Z3, Z42, Z50, and Z60 or any unsuccessful Z2 / Z3 messages (wrong prompt ID, format error, Z2 message includes non decimal characters) will make PIN pad to leave Z2 / Z3 authenticated mode to avoid attack.

Message Z2 Display String with Authentication Code

Format: **<STX>Z2<FS>[KeyID][MAC][Mode][string]<SUB><ETX>[LRC]**

(Request frame)

<STX>Z2[status]<ETX>[LRC]

(Response frame)

Message length: Variable.

Usage: This command allows acquirer to show free message on screen as prompt for clear text entry (Z42, Z50) and PIN entry (Z60). PP791 will verify MAC value by the following rule:

* Collect [Mode] character, [string] (exclude white space, punctuation marks and digits), and <SUB> character (if exist), as byte array, padding with ASCII '0' (0x30) to the multiple of 8.

* Use the key specified by [KeyID] and ISO-9797-1 Algorithm 3 to generate message authentication code for above data.

* Compare the leftmost 4 bytes of MAC value and the one written in the Z2 command. If MAC value matches, PP791 will display the [string] written in Z2 command.

Note: 1. If Z2 (string with MAC) is used in combination with Z2 (fixed prompt), their mode character (GS / RS) must be the same; Otherwise PIN pad will reject secondary Z2.

2. PIN pad will temporarily turn off timer display for the first Z2 message it received. After Z42, Z50, Z60 are performed, [CAN] key is pressed, or any other message received and processed, PIN pad will turn on the timer display.

Message element :

Z2 with MAC, request frame

Field	Length	Value and description
<STX>	1	<02>
Z2	2	Message ID
<FS>	1	<1C>, field separator.
[KeyID]	1	'B' ~ 'E', key to verify MAC value. The specified key must have usage 'M3' and mode 'V'.
[MAC]	8	Message authentication code of following message (including <SUB> if exist).
[Mode]	1	<GS> (0x1D) for Non-PIN entry. <RS> (0x1E) for PIN entry.
[string]	1 .. 62	ASCII string to be displayed
<SUB>	1	<1A> (optional) When <SUB> exists, PIN pad will clear

		screen contents and also reset entry mode.
<ETX>	1	<03>
[LRC]	1	Checksum

Z2 with MAC, response frame

Field	Length	Value and description
<STX>	1	<02>
Z2	2	Message ID
[status]	1	'0': OK '1': MAC key ID error (out of 'B'~'E'). '2': MAC key attribute error. '3': MAC value error. '4': Packet format error.
<ETX>	1	<03>
[LRC]	1	Checksum

Message flow:

HOST	Direction	PIN pad
Message Z2	→	
	←	<ACK> (Good LRC) <NAK> (Bad LRC) <EOT> (after 3 NAKs)
	←	Message Z2 (response frame)
<ACK> (Good LRC) <NAK> (Bad LRC) <EOT> (after 3 NAKs)	→	
	←	Display string <EOT> (if received <ACK>)

Message Z3 Display Line Prompts with Authentication Code

Format: **<STX>Z3<FS>[KeyID][MAC][count][Mode][prompt1]<FS>[prompt2..7]<SUB><ETX>[LRC] (Request frame)**

<STX>Z3[status]<ETX>[LRC] (Response frame)

Message length: Variable.

Usage: This command allows acquirer to show free message on screen as prompt for clear text entry (Z42, Z50) and PIN entry (Z60). PP791 will verify MAC value by the following rule:

* Collect [Mode] character, [prompt_n] (exclude white space, punctuation marks and digits), and <SUB> character (if exist), as byte array, padding with ASCII '0' (0x30) to the multiple of 8.

* Use the key specified by [KeyID] and ISO-9797-1 Algorithm 3 to generate message authentication code for above data.

* Compare the leftmost 4 bytes of MAC value and the one written in the Z2 command. If MAC value matches, PP791 will display the [string] written in Z2 command.

Note: 1. If Z3 (string with MAC) is used in combination with Z3 (fixed prompt), their mode character (GS / RS) must be the same; Otherwise PIN pad will reject secondary Z3.

2. PIN pad will temporarily turn off timer display for the first Z2 message it received. After Z42, Z50, Z60 are performed, [CAN] key is pressed, or any other message received and processed, PIN pad will turn on the timer display.

Message element:

Z3 with MAC, request frame

Field	Length	Value and description
<STX>	1	<02>
Z3	2	Message ID
<FS>	1	<1C>, field separator.
[KeyID]	1	'B' ~ 'E', key to verify MAC value. The specified key must have usage 'M3' and mode 'V'.
[MAC]	8	Message authentication code of following message (including <SUB> if exist).
[count]	1	'1' ~ '7', number of following prompts.
[Mode]	1	<GS> (0x1D) for Non-PIN entry. <RS> (0x1E) for PIN entry.
[prompt1]	Var.	First string to be displayed.
<FS>	1	<1C>, field separator

[prompt N]	Var.	Second to end string to be displayed. Each prompt is separated by <FS>.
<SUB>	1	<1A> (optional) When <SUB> exists, PIN pad will clear clear screen contents.
<ETX>	1	<03>
[LRC]	1	Checksum

Z3 with MAC, response frame

Field	Length	Value and description
<STX>	1	<02>
Z3	2	Message ID
[status]	1	'0': OK '1': MAC key ID error (out of 'B'~'E'). '2': MAC key attribute error. '3': MAC value error. '4': Packet format error.
<ETX>	1	<03>
[LRC]	1	Checksum

Message flow:

HOST	Direction	PIN pad
Message Z3	→	
	←	<ACK> (Good LRC) <NAK> (Bad LRC) <EOT> (after 3 NAKs)
	←	Message Z3 (response frame)
<ACK> (Good LRC) <NAK> (Bad LRC) <EOT> (after 3 NAKs)	→	
	←	Display string <EOT> (if received <ACK>)

Example to use Z2 / Z3 with Authencation Code.

[Example 1]

3. Use message 02 (ANSI TR31 frame) to load following key to position 'B':
   BCDE90123456789ABCDE90123456789A, Usage = M3, Mode = V.
4. Assume we want to clear screen and display following string for PIN entry: "AMOUNT 123456.78 ENTER YOUR PIN".
5. The data for MAC generation ('A' to 'Z', 'a' to 'z' and ISO8859-15 high page character from 0xBC to 0xFF, padded with ASCII 0):
   <RS>AMOUNTENTERYOURPIN<SUB>0000
   → 1E414D4F554E54454E544552594F555250494E1A30303030
   The white spaces and digits are not counted into MAC, this feature enables acquirer to issue PIN entry prompts with different amount, but keep the same MAC value.
6. Use the key specified in the step 1 to calculate ISO9797-1 algorithm 3 MAC.
   The result is: C51401D727D761E2.
   Take leftmost 4 bytes as MAC value: C51401D7.
7. Send <02>Z2<1C>BC51401D7<1E>AMOUNT 123456.78 ENTER YOUR PIN<1A><03> to PIN Pad, Then message Z60 can be issued to request PIN entry.
8. Send <02>Z2<1C>BC51401D7 <1A>AMOUNT 123.45 ENTER YOUR PIN<03> to PIN Pad to see the same MAC applies to different amounts.

[Example 2]

1. Use message 02 (ANSI TR31 frame) to load following key to position 'B':
   6AC292FAA1315B4D8234B3A3D7D5933A, Usage = M3, Mode = V.
2. Assume we want to clear screen and display for non-PIN entry: "MESSAGE ONE 1.0" and "MESSAGE TWO 2.0".
3. The data for MAC generation (padded with ASCII 0):
   <GS>MESSAGEONE<FS>MESSAGETWO<SUB>0
   → 1D4D4553534147454F4E451C4D45535341474554574F1A30
4. Use the key specified in the step 1 to calculate ISO9797-1 algorithm 3 MAC.
   Take leftmost 4 bytes as MAC value: 22C0BAD9.
5. Send <02>Z3<1C>B22C0BAD92<1D>MESSAGE ONE 1.0<1C>MESSAGE TWO 2.0<1A><03> to PIN pad.

Message Z42 Read Key Code

Format: **<STX>Z42[timeout]<ETX>[LRC]**

Message length: Variable 6 to 9 bytes.

Usage: Once PP791 receives this command, it begins polling functional key array until timeout. If PP791 received Z2 / Z3 authenticated frame before Z42, it will return any key pressed by user by ASCII key codes via message Z43. Else it will return only function key codes (F1, F2, F3, CAN, CLR, ENTER), and reject numerical key (0 to 9). Multiple key press or combined key press will be discarded.

Abort input: Issue message 72 to abort the operation.

Note: **Z2/Z3 required:** Because Z42 will not show any message to prompt user operation, Z2 or Z3 should be issued before this command, or PIN pad will send <EOT> and stop.

Message element:

Field	Length	Value and description
<STX>	1	<02>
Z42	3	Message ID
[timeout]	1 to 3	ASCII character from 1 to 255, for example "10" means 10 seconds timeout.
<ETX>	1	<03>
[LRC]	1	Checksum

Message flow:

HOST	Direction	PP791
Message Z2 or Z3	→	
	←	<ACK> (Good LRC) <NAK> (Bad LRC) <EOT> (after 3 NAKs)
		Show prompt message
Message Z42	→	
	←	<ACK> (Good LRC) <NAK> (Bad LRC) <EOT> (after 3 NAKs)
	←	Message Z43
<ACK>/<NAK>/<EOT>	→	

Message Z43 Read Key Code Response

Format: **<STX>Z43[Keycode]<ETX>[LRC]**

Message length: Fixed 7 bytes.

Usage: This is the response frame of Z42.

Message element:

Field	Length	Value and description
<STX>	1	<02>
Z43	3	Message ID
[keycode]	1	'0' to '9' ASCII 'A' to 'C' denotes 3 function keys. 'A' = [F1] 'B' = [F2] 'C' = [F3] '*' = [CAN] '#' = [ENTER] '/' = [CLR] '?' means time out.
<ETX>	1	<03>
[LRC]	1	Checksum

Message flow:

(Please refer to message Z42)

Message Z50 String Entry Request

Format: **<STX>Z50[echo flag][timeout][max entry]<ETX>[LRC]**

Message length: Variable 10 to 12 bytes.

Usage: Request user to input string on keypad.

Then PP791 will wait for keypad input and store ASCII data into internal buffer. To input English character on the keypad, press [F2] key to rotate the last character. For example, press [1], [F2], [F2] will input a 'Z' character into PP791. The maximum length of internal buffer is 49 characters.

User can use [CLR] to clear input buffer and input again, or [CAN] to cancel input.

Press '0' and press [F2] will transform '0' into period or white space.

Abort input: Issue message 72 to abort the operation.

Note: A Z2 or Z3 message with authenticated frame must be issued before Z50. Otherwise PIN pad will refuse to execute.

Message element:

Field	Length	Value and description
<STX>	1	<02>
Z50	3	Message ID
[echo flag]	1	'0': echo input as '*' '1': echo input as is '2': do not echo
[timeout]	3	ASCII character from 1 to 255 to set the timeout for each keypress, for example "010" means 10 seconds timeout after the last keypress.
[max entry]	1 or 2	(optional) Maximum entry count. Range from 00 to 49 (or 0 to 49)
<ETX>	1	<03>
[LRC]	1	Checksum

Message flow:

HOST	Direction	PP791
Message Z2 or Z3	→	
	←	<ACK> (Good LRC) <NAK> (Bad LRC) <EOT> (after 3 NAKs)
		Show prompt message
Message Z50	→	
	←	<ACK> (Good LRC) <NAK> (Bad LRC) <EOT> (after 3 NAKs)
	←	Message Z51 (or <EOT> when input cancelled)
<ACK>/<NAK>/<EOT>	→	

Message Z51 String Entry Response

Format: **<STX>Z51[string]<ETX>[LRC]**

Message length: Variable, maximum 55 bytes.

Usage: This is the response frame of Z50.

Message element:

Field	Length	Value and description
<STX>	1	<02>
Z51	3	Message ID
[string]	1..49	User inputted string. '?' means time out.
<ETX>	1	<03>
[LRC]	1	Checksum

Message flow:

(Please refer to message Z50)

Message Z60 PIN entry request with external prompt (MK/SK)

Format: **<STX>Z60.[account]<FS>[session key]<FS>[timeout]<ETX>[LRC]**

Message length: Variable 32 to 43 bytes (max. 59 bytes for TDES session key).

Usage: Request the PIN pad to accept customer PIN entry and encrypt it using the account number and working key sent along in this message. The encrypted PIN block should be retrieved via message 71.

Note: **Z2/Z3 (PIN entry mode) required:** Message Z2 or Z3 (PIN entry mode) should be issued before this command, or PIN pad will send <EOT> and stop.

Aborting Transaction: Please refer to message 70.

PIN length: Please refer to message 70.

Master key must be selected before transaction: Please refer to message 70.

Triple DES capability: Please refer to message 70.

Session Key: If the selected key is with usage "P0", the session key should be all zeros.

Message element:

Field	Length	Value and description
<STX>	1	<02>
Z60	3	Message ID
.	1	<2E>, delimiter
[Account]	8 .. 19	Account number
<FS>	1	<1C>, Field separator
[Session key]	16 or 32	Session key encrypted with selected master key. 32-characters session key produces TDES encrypted PIN block with EDE order. Format: hexadecimal string. This filed should be all zeros if the selected key is with usage "P0"
<FS>	1	(Optional) <1C>, Field separator
[timeout]	1	(Optional) ASCII character from '1' to '9' which is the timeout value in the unit of 30 seconds. Default = 9x30 = 270 seconds.
<ETX>	1	<03>
[LRC]	1	Checksum

Message flow:

HOST	Direction	PIN pad
Message Z2 or Z3	→	
	←	<ACK> (Good LRC) <NAK> (Bad LRC) <EOT> (after 3 NAKs)
		Show prompt message
Message Z60	→	
	←	<ACK> (Good LRC) <NAK> (Bad LRC) <EOT> (after 3 NAKs)
	←	Message 71 (after customer PIN entered), or <EOT> when input timed out or user pressed [CAN]
<ACK> (Good LRC) <NAK> (Bad LRC) <EOT> (after 3 NAKs)	→	

Message Z62 PIN entry request with customized prompt (MK/SK)

Format: **<STX>Z62.[account]<FS>[session key][minPIN][maxPIN] [null flag][prompt1]<FS>[prompt2]<FS>[proc prompt]<FS> [timeout]<ETX>[LRC]**

Message length: Variable 39 to 100 bytes (max. 116 bytes for TDES session key).

Usage: Request the PIN pad to display the prompt message in this data frame, accept customer PIN entry and encrypt it using the account number and working key sent along in this message. Display the [proc prompt] when the PIN has been entered. The encrypted PIN block should be retrieved via message 71.

NOTE: **Z2/Z3 (PIN entry mode) required:** If the [prompt1], [prompt2] and [proc prompt] contains any string not listed in Appendix I (fixed prompt table for PIN entry), PIN pad will send <EOT> and stop.

Aborting Transaction: Please refer to message 70.

PIN length: Although Z62 allow programmer to specify the maximum and minimum PIN length, but it is not allowed to set the value of [maxPIN] and [minPIN] to exceed ANSI x9.8 specification except allow null PIN.

Master key must be selected before transaction: Please refer to message 70.

Triple DES capability: Please refer to message 70.

Session Key: If the selected key is with usage "P0", the session key should be all zeros.

Message element:

Field	Length	Value and description
<STX>	1	<02>
Z62	3	Message ID
.	1	<2E>, delimiter
[account]	8 .. 19	Account number
<FS>	1	<1C>, field separator
[session key]	16 or 32	Session key encrypted with selected master key. 32-characters session key produces TDES encrypted PIN block with EDE order. Format: hexadecimal string. This filed should be all zeros if the selected key is with usage "P0"
[minPIN]	2	00, 04 .. 12 minimum PIN length. ('00' only available when [null flag] set to 'Y').
[maxPIN]	2	00, 04 .. 12 maximum PIN length. ('00' only available when [null flag] set to 'Y').
[null flag]	1	Y Null PIN allowed N Null PIN not allowed
[prompt1]	1 .. 16	Prompt displayed before any key is pressed, alternate with prompt2
<FS>	1	<1C>, field separator
[prompt2]	1…16	(optional)Prompt displayed before any key is pressed, alternate with prompt1
<FS>	1	<1C>, field separator
[proc prompt]	1…16	(optional)Prompt displayed after PIN is entered
<FS>	1	(optional) <1C>, field separator
[timeout]	1	(optional) ASCII character from '1' to '9' which is the timeout value in the unit of 30 seconds. Default = 9x30 = 270 seconds.
<ETX>	1	<03>
[LRC]	1	Checksum

Message flow:

HOST	Direction	PIN pad
Message Z62	→	
	←	<ACK> (Good LRC) <NAK> (Bad LRC) <EOT> (after 3 NAKs)
		(Display [prompt1] and [prompt2] wait for user enter PIN)
	←	Message 71 (after customer PIN entered)
<ACK> (Good LRC) <NAK> (Bad LRC) <EOT> (after 3 NAKs)	→	(Display [proc prompt])

Message Z66 Message Authentication Code (MAC) Request

Format: **<STX>Z66[PktType][SeqNo][KeyId] <FS> [SessionKey] <FS> [SecKeyId] <FS> [Message] <ETX> [LRC]**

Message length: Variable 14 to 270 bytes.

Usage: This message is used to generate MAC codes according to algorithm specified in ANSI X9.19 (ISO 9797-1). User can send ASCII strings or hexadecimal strings to PP791 by Z66 message to generate its MAC. User can also separate a long message into multiple Z66 messages with increasing sequence number to generate a MAC.

NOTE: **Message Length:** Onetime message can be up to 224 characters (equal to 112bytes when send as hexadecimal string because 2 characters represents 1 bytes). Multiple messages can have sequence number from 00 to 99, thus the maximum capacity of Z66 message is 22400 characters (or 11200 bytes in binary mode).

Multiple messages: When using multiple messages, [KeyId] and [SessionKey] and [SecKeyId] must be the same. [Message] must be the multiple of 8 characters (or 16 characters in binary mode). Or PP791 will generate a wrong MAC.

MAC algorithm: PP791 generate TDES MAC according to ISO9797-1 algorithm 3. (Padding with 0. Initial vector = 0. Refer to Appendix A point 10 for detail algoritgm.)

Session Key: The value of session key relates to the usage of specified master keys.

Usage of 1st Key ID	Usage of 2nd Key ID	Value of session key	MAC Key
"K0"	N/A	Non-zero	Session key
"M3" (mode G)	N/A	Zero	Master key specified by [KeyId]. If specified key is mode 'V', this is for MAC verification and cannot used to generate MAC for Z66 command.
"M1" (mode G)	"M1"	Zero	Master key specified by [KeyId] as left key, and master key specified by [SecKeyId] as right key.

Message element:

Field	Length	Value and description
<STX>	1	<02>
Z66	3	Message ID
[PktType]	1	'4' = ASCII last or only packet. '5' = ASCII first or middle of multiple packets. '6' = Binary last or only packet. '7' = Binary first or middle of multiple packets.
[SeqNo]	2	'00' to '99', for onetime only packet, set to 00.
[KeyId]	1	(Optional) Master key to use, range = 'B' to 'E'. If this filed is blank, the MAC master key will be the selected key 0 ~ 9.
<FS>	1	<1C>, field separator
[SessionKey]	32	Session key will be decrypted by: Master key pointed by [KeyId]. Format: hexadecimal string. This filed should be all zeros if the selected key is with usage "M1" or "M3"
<FS>	1	<1C>, field separator
[SecKeyId]	1	(Optional) Refer to note of Z66 usage. If first [KeyId] points to key with "K0" or "M3" usage, this field should be omitted.
<FS>	1	<1C>, field separator
[Message]	1-224	ASCII string or Hexadecimal string to be MACed.
<ETX>	1	<03>
[LRC]	1	Checksum

Message flow: (Onetime only packets)

HOST	Direction	PIN pad
Message Z66 (type 4,6)	→	
	←	<ACK> (Good LRC) <NAK> (Bad LRC) <EOT> (after 3 NAKs)
	←	Message Z67 (with MAC)
<ACK> (Good LRC) <NAK> (Bad LRC) <EOT> (after 3 NAKs)	→	

Message flow: (Multiple packets)

HOST	Direction	PIN pad
Message Z66 (Seq'00' and type 5,7)	→	
	←	<ACK> (Good LRC) <NAK> (Bad LRC) <EOT> (after 3 NAKs)
	←	Message Z67 (with status code '1')
<ACK> / <NAK> / <EOT>	→	
Message Z66 (Seq'01'--'98', type 5,7)	→	
	←	<ACK> / <NAK> / <EOT>
	←	Message Z67 (with status code '1')
……	……..	……..
Message Z66 (Sequence# larger than last packet, type 4,6)	→	
	←	<ACK> / <NAK> / <EOT>
	←	Message Z67 (with MAC)
<ACK> / <NAK> / <EOT>	→	

Message Z67 Message Authentication Code (MAC) Response

Format: **<STX>Z67[status][MAC]<ETX>[LRC]**

Message length: Fixed 7 (status only) or 23 (with MAC) bytes.

Usage: PP791 generated MAC calculation response. It contains status codes or MAC.

Message element:

Field	Length	Value and description
<STX>	1	<02>
Z67	3	Message ID
[status]	1	'0'=Success, MAC follows '1'=Ready for next Z66 packet, user in multiple messages. '2'=Sequence numbers out of order '3'=Master key specified in [KeyId] not exist, or range unacceptable (id 0 to A), or usage not "K0", "M1", "M3. '4'=Master key specified in [SecKeyId] unreasonable or not exist. The [SecKeyId] only exists if [KeyId] points to a "M1" master key, and the [SecKeyId] itself should have "M1" usage. '5'=[Message] length have error (too long, zero length, or not even number in binary mode) '6'=[PkyType] flag has invalid value '7'=[Message] contents error (i.e. characters larger than 'F' in binary mode) '8'=[SessionKey] invaild '9'=MAC master key length should not be 8 'A'=Session key is incompatible to the usage of specified master key. (If MK's usage is "M1" or "M3", SK should contains all zero, if MK's usage is "K0", SK should not be zero.)
[MAC]	16	Calculated MAC.
<ETX>	1	<03>
[LRC]	1	Checksum

Message flow:

(Please refer to message Z66)

Message Z7 Turn ON/OFF CANCEL Message Display

Format: **<STX>Z7[option]<ETX>[LRC]**

Message length: Fixed 6 bytes.

Usage: When a CANCEL message received or a CANCEL key pressed to cancel a current transaction, the PIN pad will display a "TRANSACTION CANCELLED" message. This could be turned ON or OFF using message Z7.

Message element:

Field	Length	Value and description
<STX>	1	<02>
Z7	2	Message ID
[option]	1	'0' = message displayed '1' = message not displayed
<ETX>	1	<03>
[LRC]	1	Checksum

Message flow:

HOST	Direction	PIN pad
Message Z7	→	
	←	<ACK> (Good LRC) <NAK> (Bad LRC) <EOT> (after 3 NAKs)
		message turned ON/OFF

Message Z8 Set Idle Prompt

Format: **<STX>Z8[prompt]<ETX>[LRC]**

Message length: Variable 6 to 21 bytes.

Usage: The PIN pad will display an idle prompt when it is in IDLE state. HOST can change this idle prompt via message Z8. If the prompt field is filled with a null string, then the PIN pad will use the default prompt afterwards.

Message element:

Field	Length	Value and description
<STX>	1	<02>
Z8	2	Message ID
[Prompt]	1 .. 16	Idle prompt to be used
<ETX>	1	<03>
[LRC]	1	Checksum

Message flow:

HOST	Direction	PIN pad
Message Z8	→	
	←	<ACK> (Good LRC) <NAK> (Bad LRC) <EOT> (after 3 NAKs)
		Displays idle prompt

Section 10 Online transaction messages with Derived Unique Key per Transaction (DUKPT)

The following messages are designed for Derived Unique Key Per Transaction (DUKPT) key management scheme described in ANSI X9.24-1992 and 2002 (Triple-DES DUKPT).

Note that some of the messages have the same IDs as those in MK/SK scheme, but with different message format.

[TDES Capability]

If PP791 receives double length key in message 90/94 (Load Initial Key), the following DUKPT operation will be done in TDES mode. PIN block will be TDES encrypted by derived key in EDE order.

[Secondary DUKPT Key Set]

PP791 provides 2nd key set of DUKPT operation for scalability. For example, customer can inject a DES initial key into key set 0 and a TDES initial key into key set 1, using key set 0 to process traditional DES transactions at first. When host systems ready to shift to TDES transaction, simply issue key set selection command (96) to make PP791 switch to key set 1 without recall all PP791 to inject new initial keys.

The following messages fall into this category:

60 Pre-Authorization PIN Entry Request
62 Pre-Authorization Amount Authorization Request
63 Pre-Authorization Amount Authorization Response
70 PIN entry request
71 Encrypted PIN block response
72 PIN entry cancel
Z60 PIN entry request with external prompt (DUKPT)
Z62 PIN entry request with customized prompt
76 PIN Entry Test Request
90 Load First Initial Key Request
91 Load Initial Key Response
94 Load Second Initial Key Request
96 Select Active Key Set

Message 60 Pre-authorization PIN Entry Request

Format: **<STX>60[account] <ETX>[LRC]**

Message length: Variable 13 to 24 bytes.

Usage: PIN pad will wait till the PIN entered and ENTER key is pressed. After PIN is entered, message 71 with PIN block will be sent as response. The HOST must transmit message 62 to ask for confirmation on transaction amount.

Note: **Z2/Z3 (PIN entry mode) required:** Message Z2 or Z3 (PIN entry mode) should be issued before this command, or PIN pad will send <EOT> and stop.

Aborting Transaction: Please refer to message 70(DUKPT).

PIN length: Please refer to message 70(DUKPT).

Message element:

Field	Length	Value and description
<STX>	1	<02>
60	2	Message ID
[Account]	8..19	Primary account number
<ETX>	1	<03>
[LRC]	1	Checksum

Message flow:

HOST	Direction	PIN pad
Message Z2 or Z3	→	
	←	<ACK> (Good LRC) <NAK> (Bad LRC) <EOT> (after 3 NAKs)
		Show Prompt Messages
Message 60	→	
	←	<ACK> (Good LRC) <NAK> (Bad LRC) <EOT> (after 3 NAKs)
	←	(User enter PIN and press ENTER) Message 71
<ACK> (Good LRC) <NAK> (Bad LRC) <EOT> (after 3 NAKs)	→	
		Display "PIN PAD PROCESSING" until CLEAR pressed or another message received.
Message 62	→	
	←	<ACK> (Good LRC) <NAK> (Bad LRC) <EOT> (after 3 NAKs)
	←	(User confirm the amount) Message 63
<ACK> (Good LRC) <NAK> (Bad LRC) <EOT> (after 3 NAKs)	→	

Message 62 Pre-authorization Amount Authorization Request

Format: **<STX>62[DC Ind][amount]<ETX>[LRC]**

Message length: Variable 10 to 14 bytes.

Usage: Display prompt and accept customer PIN input. The following prompt will be displayed:

"Total Amount $xxx.xx"

"Enter – Confirm"

"Cancel – Decline"

xxx.x is the content of Amount field, with length between 4 to 8 positions. The PIN pad will then wait till either CAN or ENTER key is pressed. If ENTER key is pressed, the PIN pad will response with positive confirmation. If CAN is pressed, the PIN pad will response a negative confirmation. During this period, the PIN pad will not process any message other than the message 72(cancel transaction).

Message element:

Field	Length	Value and description
<STX>	1	<02>
62	2	Message ID
[DC Ind]	1	D/C: Debit/Credit Indicator
[amount]	4..8	Amount of goods to be displayed on PIN pad.
<ETX>	1	<03>
[LRC]	1	Checksum

Message flow:

Please reference message 60.

Message 63 Pre-authorization Amount Authorization Response

Format: **<STX>63[Confirm] <ETX>[LRC]**

Message length: Fixed 6 bytes.

Usage: Send Authentication Code and the confirmation of transaction amount to HOST.

Message element:

Field	Length	Value and description
<STX>	1	<02>
63	2	Message ID
[Confirm]	1	'0' OK, '1' denied.
<ETX>	1	<03>
[LRC]	1	Checksum

Message flow:

Please reference message60.

Message 70 PIN Entry Request (DUKPT)

Format: **<STX>70[account]<FS>[DC Ind][amount]<FS>[timeout]<ETX>[LRC]**

Message length: Variable 21 to 36 bytes.

Usage: Display prompt and accept customer PIN input. The following prompt will be displayed:

```
"Total Amount"
 "$xxx.xx"
 "Enter PIN"
 "Push "ENTER""
```

xxx.x is the content of Amount field, with length between 4 to 8 positions. The PIN pad will then wait till the PIN entered and [ENTER] key is pressed. After ENTER key is pressed, the string "PIN PAD" and "PROCESSING" will be displayed until the CLEAR key is pressed. During this period, the PIN Pad will not process any message other than the CANCEL message (message 72).

NOTE: **Aborting transaction:** Press CLEAR button to reset the PIN input and CAN (cancel) button to abort the transaction.

PIN length: According to ANSI X9.8 standard, the length of PIN should between 4 to 12 digits. If user inputs less than 4 digits and press ENTER, PIN pad will beep for error and continue to wait for user's input. When user inputs 13th character, PIN pad will beep for error, conserves PIN character 1st to 12th, and wait for ENTER.

Triple DES capability: If preloaded initial key is double length key, PP791 will produce TDES encrypted PIN block (EDE order).

Message element:

Field	Length	Value and description
<STX>	1	<02>
70	2	Message ID
[Account]	8..19	Primary account number
<FS>	1	<1C>, field separator
[DC Ind]	1	D/C: Debit/Credit Indicator
[Amount]	4..8	Amount of goods to be displayed on PIN pad.
<FS>	1	(optional) <1C>, field separator
[timeout]	1	(optional) ASCII character from '1' to '9' which is the timeout value in the unit of 30 seconds. Default = 9x30 = 270 seconds.
<ETX>	1	<03>
[LRC]	1	Checksum

Message flow:

HOST	Direction	PIN pad
Message 70	→	
	←	<ACK> (Good LRC) <NAK> (Bad LRC) <EOT> (after 3 NAKs)
	←	Message 71 or <EOT> when [CAN] pressed or input timed out.
<ACK> (Good LRC) <NAK> (Bad LRC) <EOT> (after 3 NAKs)	→	
		Display "PIN PAD PROCESSING" until CLEAR pressed or another message received.

Message 71 Encrypted PIN Block Response

Format: **<STX>71<fkey flag>[Key Serial#][PIN][LRC] (PIN block frame)**

<STX>71[error code]<ETX>[LRC] (Error code frame)

Message length: Variable 32 to 42 bytes.

Usage: Send the entered PIN to HOST in encrypted format.

Message element:

Field	Length	Value and description
<STX>	1	<02>
71	2	Message ID
[fkey flag]	1	Always '0' (This field is kept to retain old model compatibility.)
[Key Serial#]	10..20	Key Serial number used in encrypting PIN. Included only when PIN is entered. Format: hexadecimal string.
[PIN]	16	Encrypted PIN block Format: hexadecimal string.
<ETX>	1	<03>
[LRC]	1	Checksum

Message flow:

Please refer to message70 (DUKPT).

Error codes:

Code	Meaning
'0'	Null Account input field.
'2'	Account number shorter than 8 digits.
'3'	Account number longer than 19 digits.
'4'	Account number have character other than '0'-'9'.
'5'	[D/C ind] field not exist or format error.
'6'	Timeout value error.
'8'	Amount string format error.
'A'	No DUKPT key injected
'B'	Flash read/write error
'C'	Memory buffer allocation error
'F'	DUKPT operation limit (1 million) reached, program stop.
'G'	Specified file not found or authentication error.

Message 72 PIN Entry Cancel

Format: **<STX>72<ETX>[LRC]**

Message length: Fixed 5 bytes.

Usage: Cancel current transaction and return the PIN pad to IDLE state, used to interrupt command in process. If PIN pad receives message 72 while processing user input such as swipe card, enter PIN or key-in data, It will respond with <EOT> to acknowledge that operation is canceled.

Message element:

Field	Length	Value and description
<STX>	1	<02>
72	2	Message ID
<ETX>	1	<03>
[LRC]	1	Checksum

Message flow:

In Idle mode (normal condition)

HOST	Direction	PIN Pad
Message 72	→	
	←	<ACK> (Good LRC) <NAK> (Bad LRC) <EOT> (after 3 NAKs)

In PIN/data entry mode (cancel/abort the session)

HOST	Direction	PIN Pad
Message 72	→	
	←	<EOT> If PIN Pad is in PIN/Data entry mode or waiting for tapping/swiping card.

Message Z60 PIN entry request with external prompt (DUKPT)

Format: **<STX>Z60.[account]<FS>[timeout]<ETX>[LRC]**

Message length: Variable 15 to 28 bytes.

Usage: Request the PIN pad to accept customer PIN entry and encrypt it using the account number and working key sent along in this message. The encrypted PIN block should be retrieved via message 71.

Note: **Z2/Z3 (PIN entry mode) required:** Message Z2 or Z3 (PIN entry mode) should be issued before this command, or PIN pad will send <EOT> and stop.

Aborting Transaction: Please refer to message 70.

PIN length: Please refer to message 70.

Triple DES capability: Please refer to message 70.

Message element:

Field	Length	Value and description
<STX>	1	<02>
Z60	3	Message ID
.	1	<2E>, delimiter
[Account]	8 .. 19	Account number
<FS>	1	(Optional) <1C>, Field separator
[timeout]	1	(Optional) ASCII character from '1' to '9' which is the timeout value in the unit of 30 seconds. Default = 9x30 = 270 seconds.
<ETX>	1	<03>
[LRC]	1	Checksum

Message flow:

HOST	Direction	PIN pad
Message Z2 or Z3	→	
	←	<ACK> (Good LRC) <NAK> (Bad LRC) <EOT> (after 3 NAKs)
		Show prompt message
Message Z60	→	
	←	<ACK> (Good LRC) <NAK> (Bad LRC) <EOT> (after 3 NAKs)
	←	Message 71 (after customer PIN entered), or <EOT> when input timed out or user pressed [CAN]
<ACK> (Good LRC) <NAK> (Bad LRC) <EOT> (after 3 NAKs)	→	

Message Z62 PIN entry request with customized prompt (DUKPT)

Format: **`<STX>Z62.[account]<FS>[minPIN][maxPIN][null flag]`**
`[prompt1]<FS>[prompt2]<FS>[proc prompt]<FS>[timeout]<ETX>[LRC]`

Message length: Variable 39 to 100 bytes.

Usage: Request the PIN pad to display the prompt message in this data frame, accept customer PIN entry and encrypt it using the account number and working key sent along in this message. Display the [proc prompt] when the PIN has been entered. The encrypted PIN block should be retrieved via message 71.

NOTE: **Z2/Z3 (PIN entry mode) required:** If the [prompt1] contains any string not listed in Appendix I (fixed prompt table for PIN entry), PIN pad will send <EOT> and stop.

Aborting Transaction: Please refer to message 70.

PIN length: Although Z62 allow programmer to specify the maximum and minimum PIN length, but it is not allowed to set the value of [maxPIN] and [minPIN] to exceed ANSI x9.8 specification except allow null PIN.

Triple DES capability: Please refer to message 70.

Message element:

Field	Length	Value and description
<STX>	1	<02>
Z62	3	Message ID
.	1	<2E>, delimiter
[account]	8 .. 19	Account number
<FS>	1	<1C>, field separator
[minPIN]	2	00, 04 .. 12 minimum PIN length. ('00' only available when [null flag] set to 'Y').
[maxPIN]	2	00, 04 .. 12 maximum PIN length. ('00' only available when [null flag] set to 'Y').
[null flag]	1	Y Null PIN allowed N Null PIN not allowed
[prompt1]	1 .. 16	Prompt displayed before any key is pressed, alternate with prompt2
<FS>	1	<1C>, field separator
[prompt2]	1…16	(optional)Prompt displayed before any key is pressed, alternate with prompt1
<FS>	1	<1C>, field separator
[proc prompt]	1…16	(optional)Prompt displayed after PIN is entered
<FS>	1	(optional) <1C>, field separator
[timeout]	1	(optional) ASCII character from '1' to '9' which is the timeout value in the unit of 30 seconds. Default = 9x30 = 270 seconds.
<ETX>	1	<03>
[LRC]	1	Checksum

Message flow:

HOST	Direction	PIN pad
Message Z2 or Z3	→	
	←	<ACK> (Good LRC) <NAK> (Bad LRC) <EOT> (after 3 NAKs)
		Show prompt message
Message Z62	→	
	←	<ACK> (Good LRC) <NAK> (Bad LRC) <EOT> (after 3 NAKs)
		(Display [prompt1] and [prompt2] wait for user enter PIN)
	←	Message 71 (after customer PIN entered)
<ACK> (Good LRC) <NAK> (Bad LRC) <EOT> (after 3 NAKs)	→	(Display [proc prompt])

Message 76 PIN Entry Test Request

Format: **<STX>76[account]<FS>[DC Ind][amount]<ETX>[LRC]**

Message length: Variable 19 to 34 bytes.

Usage: This message is designed to do DUKPT continuous PIN entry test. PP791 will send message71 assuming a PIN of '1234'.

Message element:

Field	Length	Value and description
<STX>	1	<02>
76	2	Message ID
[Account]	8..19	Primary account number
<FS>	1	<1C>, field separator
[DC Ind]	1	D/C: Debit/Credit Indicator
[Amount]	4..8	Amount of goods to be displayed on PIN pad.
<ETX>	1	<03>
[LRC]	1	Checksum

Message flow: This message is identical to message70 except that a PIN of '1234' is used instead of getting keypad input.

Message 7A KSN output format

Format: **<STX>7A[KSN_format] <ETX>[LRC]**

Message length: Fixed 6 bytes.

Usage: This message will set the key serial number (KSN) format of message 71 (DUKPT frame). Format 0 is the original mode (strip leading 'F' of KSN) which is compatible of PP690, PP790SE and PP791, Format 1 is full mode (output full 20 characters of KSN).

Message element:

Field	Length	Value and description
<STX>	1	<02>
7A	2	Message ID
[KSN_format]	1	'0': message 71 output KSN without leading 'F' '1': message 71 output KSN with leading 'F'.
<ETX>	1	<03>
[LRC]	1	Checksum

Message flow:

HOST	Direction	PIN pad
Message 7A	→	
	←	<ACK> (Good LRC) <NAK> (Bad LRC) <EOT> (after 3 NAKs)

Message 90 Load First Initial Key Request

Format: **<STX>90[IPEK][KSN]<ETX>[LRC] (Clear Text)**

<STX>90[TR-31 Key Block]<ETX>[LRC] (Encrypted)

Message length: Fixed 41 or 57 bytes for clear text format, 93 or 109 bytes for TR-31 format.

Usage: Load first set of DUKPT initial key and serial number key to PP791. Consequent keys will be generated using provided data.

If 32-characters (double length) initial key being loaded, PP791 will do key generation, PIN entry, and other DUKPT operations in TDES manner.

PP791 implements multiple security measures to conform Payment Card Industry (PCI) security requirement. In order to load clear text IPEK key, two authorized people with their password are required. Otherwise the user must issue message 90 with encrypted key value (ANSI TR31 format). See "**Symmetric Keys Loading Authentication**" for detailed information.

Note: VISA required key serial number format are as follows:

4'F' characters, a 6-digit keyset identifier, 5-digit device ID, followed by a '0',

i.e. "FF FF kk kk kk dd dd d0 00 00"

Message element:

(Clear text format)

Field	Length	Value and description
<STX>	1	<02>
90	2	Message ID
[IPEK]	16 or 32	Initial PIN encryption key. 32-characters Initial key will make PP791 act in TDES DUKPT mode. Format: hexadecimal string.
[KSN]	20	Key serial number used in generating consequent keys. Format: hexadecimal string.
<ETX>	1	<03>
[LRC]	1	Checksum

(Encrypted format)

Field	Length	Value and description
<STX>	1	<02>
90	2	Message ID
[TR-31 Key Block]	88 or 104	TR-31 key block with optional header block that contains KSN. See Appendix A for detail.
<ETX>	1	<03>
[LRC]	1	Checksum

Message flow:

HOST	Direction	PIN pad
Message 90	→	
	←	<ACK> (Good LRC) <NAK> (Bad LRC) <EOT> (after 3 NAKs)
	←	Message 91
<ACK>/<NAK>/<EOT>	→	

Example:

Clear Text

IPEK key to be loaded: ABCDEF0123456789FEDCBA9876543210

KSN: FFFF9876543210E00000

The resulting 90 message :

<STX>90ABCDEF0123456789FEDCBA9876543210FFFF9876543210E00000<ETX>[LRC]

TR-31 Key Block

Key Block Protecting Key: AA55AA55AA55AA55 3434343434343434

IPEK key to be loaded: ABCDEF0123456789 FEDCBA9876543210

KSN: FFFF9876543210E00000

Key Block Header: B0104B1TX00N0100 KS18FFFF9876543210E00000

Padded IPEK: 0080 ABCDEF0123456789 FEDCBA9876543210 30111D18CC4C

Derived KBEK: 3C50E1B7962F2171DC8643F1D923ABF7

Derived KBMK: 46FBEEB64EAE26A650952DA4F6DD8325

CMAC of (KBH + Padded key data), using KBMK: 93C3D5EBC6C407E4

Use CMAC as IV to do TDES CBC encryption on padded key data, using KBEK:

Encrypted key data: EC86E6E3B24544F97C629FB0E0586A0285D35BA78E9B13FB

Result: <02>90B0104B1TX00N0100KS18FFFF9876543210E00000EC86E6E3B24544F9 7C629FB0E0586A0285D35BA78E9B13FB93C3D5EBC6C407E4<03>

Message 91 Load Initial Key Response

Format: **<STX>91[Status]<ETX>[LRC]**

Message length: Variable (max 7 bytes.)

Usage: Confirmation of the initial key loading. PP791 will also show a message "IPEK n loaded" (n = 1 or 2) to confirm the success loading of initial key of set 1 and set 2 visually.

Message element:

Field	Length	Value and description
<STX>	1	<02>
91	2	Message ID
[Status]	1..2	'0' if successful '1' + [Error Code] if process failed.
<ETX>	1	<03>
[LRC]	1	Checksum

Message flow: Please reference message90.

Error codes:

Code	Meaning
'1'	Processing message 90 without authentication, process authentication at first
'2'	IPEK and KSN format error: not hexadecimal character.
'3'	Internal memory allocation error.
'4'	Internal fail to read key structure
'A'	TR31 format error.
'B'	Insecure key inject. (New key is longer than the key used to protect it.)
'C'	Fail to verify MAC value.
'D'	KLK does not exist.
'F'	Key loading count over limit.

Message 94 Load Second Initial Key Request

Format: **<STX>94[IPEK][KSN]<ETX>[LRC]**

<STX>90[TR-31 Key Block]<ETX>[LRC] (Encrypted)

Message length: Fixed 41 or 57 bytes for clear text format, 93 or 109 bytes for TR-31 format.

Usage: Load second set of DUKPT initial key and serial number key to PP791. Consequent keys will be generated using provided data.

Note: Refer to message 90.

Message element:

(Clear Text Format)

Field	Length	Value and description
<STX>	1	<02>
94	2	Message ID
[IPEK]	16 or 32	Initial PIN encryption key. 32-characters Initial key will make PP791 act in TDES DUKPT mode. Format: hexadecimal string.
[KSN]	20	Key serial number used in generating consequent keys. Format: hexadecimal string.
<ETX>	1	<03>
[LRC]	1	Checksum

(Encrypted format)

Field	Length	Value and description
<STX>	1	<02>
94	2	Message ID
[TR-31 Key Block]	88 or 104	TR-31 key block with optional header block that contains KSN. See Appendix A for detail.
<ETX>	1	<03>
[LRC]	1	Checksum

Message flow:

HOST	Direction	PIN Pad
Message 94	→	
	←	<ACK> (Good LRC) <NAK> (Bad LRC) <EOT> (after 3 NAKs)
	←	Message 91
<ACK>/<NAK>/<EOT>	→	

Message 96 Select Active Key Set

Format: **<STX>96[keyset]<ETX>[LRC]**

Message length: Fixed 6 bytes.

Usage: Select active key set for following transactions. This parameter willl be saved and lasts until next 96 message or DUKPT life cycle ends.

Message element:

Request frame (HOST to PIN Pad)

Field	Length	Value and description
<STX>	1	<02>
96	2	Message ID
[keyset]	1	ASCII character '0' = First key set '1' = Second key set
<ETX>	1	<03>
[LRC]	1	Checksum

Message flow:

HOST	Direction	PIN Pad
Message 96 request frame	→	
	←	<ACK>/<NAK>/<EOT>

Section 11 ICC / SAM / Magnetic stripe card manipulating messages

The following messages are used in manipulating the integrated ICC slot, SAM slot, magnetic card reader UIC contact-less module on the PIN pad unit.

NOTE: By default, MSR function is turned off until user issue Q4 command to enable.

I00	Query Primary Smart Card Presence
I01	Primary Smart Card Cold Reset
I02	Primary Smart Card ATR Response
I04	Primary Smart Card Deactivate
I06	Primary Smart Card C-APDU
I07	Primary Smart Card R-APDU
I0F	Error code message response
I11	SAM slot Cold Reset
I12	SAM slot ATR Response
I14	SAM slot Card Deactivate
I15	Select SAM Interface
I16	SAM slot C-APDU
I17	SAM slot R-APDU

Message I00 Query Primary Smart Card Presence

Format: **<STX>I00<ETX>[LRC] (request)**

<STX>I00[response]<ETX>[LRC] (response)

Message length: Fixed 6 bytes (request frame) / 7 bytes (response frame).

Usage: Upon receiving a query card packet, PP791 checks whether the card is present in the primary card reader or not. If the card exists in the reader, PP791 replies the code 'F'. Otherwise, the code '0' is used instead.

Request frame (HOST to PP791)

Field	Length	Value and description
<STX>	1	<02>
I00	3	Message ID
<ETX>	1	<03>
[LRC]	1	Checksum

Response frame (PP791 to HOST)

Field	Length	Value and description
<STX>	1	<02>
I00	3	Message ID
[Response]	1	0: Smart card not exists. F: Smart card exists
<ETX>	1	<03>
[LRC]	1	Checksum

Message flow:

HOST	Direction	PP791
Message I00 (Request)	→	
	←	<ACK> (Good LRC) <NAK> (Bad LRC) <EOT> (after 3 NAKs)
		Check card existence Message I00 (response)
<ACK> (Good echo) <NAK> (Bad LRC) <EOT> (after 3 NAKs)	→	

Message I01 Primary Smart Card Cold Reset

Format: **<STX>I01<ETX>[LRC]**

Message length: Fixed 6 bytes.

Usage: PP791 performs a cold reset on the active smart card. If the operation is successful, PP791 sends the message I02 with the "Answer to Reset" (ATR) of the smart card to host. Otherwise, the message I0F bears the error code is to be sent back.

Message element:

Field	Length	Value and description
<STX>	1	<02>
I01	3	Message ID
<ETX>	1	<03>
[LRC]	1	Checksum

Message flow:

HOST	Direction	PP791
Message I01	→	
	←	<ACK> (Good LRC) <NAK> (Bad LRC) <EOT> (after 3 NAKs)
	←	Smart card cold reset. Message I02 (ATR)
<ACK> (Good LRC) <NAK> (Bad LRC) <EOT> (after 3 NAKs)	→	

Message I02 Primary Smart Card ATR Response

Format: **<STX>I02[ATR]<ETX>[LRC]**

Message length: Variable, depending on the specification of smart card..

Usage: The message contains the "Answer to Reset" (ATR) of the smart card to be sent to host. In general, the ATR conforms to the ISO 7816-3 or EMV 4.3 Book 1. See these standards for more detail information.

Message element:

Field	Length	Value and description
<STX>	1	<02>
I02	3	Message ID
[ATR]	N	Answer to reset data. Format: Hexadecimal string.
<ETX>	1	<03>
[LRC]	1	Checksum

Message flow: Please refer to message I01.

Message I04 Primary Smart Card Deactivate

Format: **<STX>I04<ETX>[LRC]**

Message length: Fixed 6 bytes.

Usage: Upon receiving the card deactivate packet, PP791 sets the active smart card to the deactivate state. If the operation is successful, PP791 replies same packet to confirm. Otherwise, message I0F with the error code is used instead..

Message element:

Field	Length	Value and description
<STX>	1	<02>
I04	3	Message ID
<ETX>	1	<03>
[LRC]	1	Checksum

Message flow:

HOST	Direction	PP791
Message I04	→	
	←	<ACK> (Good LRC) <NAK> (Bad LRC) <EOT> (after 3 NAKs)
	←	Deactivate smart card. Message I04 (success) Message I0F (fail)
<ACK> (Good LRC) <NAK> (Bad LRC) <EOT> (after 3 NAKs)	→	

Message I06 Primary Smart Card C-APDU

Format: **<STX>I06[C-APDU]<ETX>[LRC]**

Message length: Variable 14 to 530 bytes.

Usage: The Command APDU (application protocol data unit) is the data to be sent to the active smart card. PP791 's smart card reader will handle base protocols such as T=0 and T=1, so programmer need only send APDU. In general, PP791 will reply the message I07 (response APDU from card) to host in 1 second. For any error, PP791 will send message I0F with error code back.

Message element:

Field	Length	Value and description
<STX>	1	<02>
I06	3	Message ID
[C-APDU]	8..524	Smart card command APDU. Format: hexadecimal string.
<ETX>	1	<03>
[LRC]	1	Checksum

Message flow:

HOST	Direction	PP791
Message I01	← →	(Smart card power on and ATR response)
Message I06	→	
	←	<ACK> (Good LRC) <NAK> (Bad LRC) <EOT> (after 3 NAKs)
	←	Communication with card. Message I07 or I0F
<ACK> (Good LRC) <NAK> (Bad LRC) <EOT> (after 3 NAKs)		

Message I07 Primary Smart Card R-APDU

Format: **<STX>I07[R-APDU]<ETX>[LRC]**

Message length: Variable 10 to 530 bytes.

Usage: After smart card processes the Command-APDU, it puts the result as the Response-APDU. PP791 packs the Response-APDU into this message packet and sends to host.

Message element:

Field	Length	Value and description
<STX>	1	<02>
I07	3	Message ID
[R-APDU]	4.. 524	Smart card response APDU Format: hexadecimal string.
<ETX>	1	<03>
[LRC]	1	Checksum

Message flow: Please refer to message I06.

Message I08 Smart Card Offline PIN Verification (EMV)

Format: **<STX>I08[Mode]<FS>[Prompt & Amount]<ETX>[LRC] (Clear-text mode)**
<STX>I08[Mode]<FS>[Prompt & Amount]<FS>RSA public Exp]<FS>[RSA public Modulus]<ETX>[LRC] (Cipher-text mode)

Message length: Variable.

Usage: User could apply message I01 ~ I06 to implement his EMV transaction flow. In EMV transaction flow, user could apply this message to implement the offline PIN verification operation defined by EMV Co. User applies this message to make PIN pad ask cardholder enter his PIN on PIN pad and then PIN pad will send the PIN block (in clear -text or cipher-text) to IC card. For secure consideration, user will not get any information about cardholder's PIN, user can only get the PIN verification result from PIN pad.

In PIN verification operation, PIN pad will issue "Get Challenge" command to get random number from smart card for PIN encryption.

Message element:

Field	Length	Value and description
<STX>	1	<02>
I08	3	Message ID
[Mode]	1	0: Clear PIN mode 1: Cipher PIN mode
<FS>	1	<1C>
[Prompt & Amount]	var	ASCII string. The data in this filed is used to present to cardholder. The length of this filed could be 1 ~ 32. Ex. Amount: 12.345 PIN pad will append messages on line 3 and 4 to inform user to make a confirmation.
<FS>	1	<1C> (Optional, if Mode is 1)
[RSA public Exp]	1	(Optional, if Mode is 1) 1: 3 2: 2^16 + 1
<FS>	1	(Optional, if Mode is 1) <1C>
[RSA public Modulus]	Var.	Hex string. RSA modulus. (Optional, if Mode is 1)
<ETX>	1	<03>
[LRC]	1	Checksum

Message flow:

HOST	Direction	PP791
Message I08	→	
	←	<ACK> (Good LRC) <NAK> (Bad LRC) <EOT> (after 3 NAKs)
	←	Communication with card. Message I09 or I0F
<ACK> (Good LRC) <NAK> (Bad LRC) <EOT> (after 3 NAKs)		

Message I09 Response of Smart Card Offline PIN Verification (EMV)

Format: **<STX>I09[Response]<ETX>[LRC]**

Message length: Fixed 7 bytes.

Usage: PIN pad will return the result of PIN verification operation. For EMV rule, it's recommended that terminal applies next CVM if get response equal to 'C', 'E', and 'S', terminates EMV transaction if get response equal to 'D' and 'F'.

Message element:

Field	Length	Value and description
<STX>	1	<02>
I09	3	Message ID
[**Response**]	1	ASCII character. A: PIN is verified successfully. C: Cardholder bypass PIN. D: Communication failed (with smart card). E: Exceed PIN try limit S: No random number from smart card. F: Other errors
<ETX>	1	<03>
[LRC]	1	Checksum

Message flow: Please refer to message I08.

Message I0F Error Codes

Format: **<STX>I0F[error code]<ETX>[LRC]**

Message length: Fixed 8 bytes.

Usage: This message contains the error codes to indicate what's going on for error situation.

The error code list is as follows:

"01" - ATR error or NO smart card.

"02" - APDU data length is not enough.

"03" – ICC/SAM card not powered yet, use I01 first.

"04" - The alphanumeric in APDU data are out of range.

"05" - Current smart card reader doesn't have card in.

"06" - Smart card interface switch failed.

"07" - PP791 Smart card module timed out.

"08" - Smart card APDU command failed.

"09" - This parameter does not supported by PP791.

"0A" - This unit does not have corresponding peripheral (ICC reader or SAM).

"0B" – Already power up.

Message element:

Field	Length	Value and description
<STX>	1	<02>
I0F	3	Message ID
[Error code]	2	Error codes.
<ETX>	1	<03>
[LRC]	1	Checksum

Message flow: Please refer to I00 to I07.

Message I11 SAM slot Cold Reset

Format: **<STX>I11<ETX>[LRC]**

Message length: Fixed 6 bytes.

Usage: PP791 performs a cold reset on the active SAM interface. If the operation is succeeded, PP791 sends the message I12 with the "Answer to Reset" (ATR) of the smart card to host. Otherwise, the message I0F bears the error code is to be sent back.

Message element:

Field	Length	Value and description
<STX>	1	<02>
I11	3	Message ID
<ETX>	1	<03>
[LRC]	1	Checksum

Message flow:

HOST	Direction	PP791
Message I15	← →	(Select interface and response)
Message I11	→	
	←	<ACK> (Good LRC) <NAK> (Bad LRC) <EOT> (after 3 NAKs)
	←	Smart card cold reset. Message I12 (ATR)
<ACK> (Good LRC) <NAK> (Bad LRC) <EOT> (after 3 NAKs)	→	

Message I12 SAM slot ATR Response

Format: **<STX>I12[ATR]<ETX>[LRC]**

Message length: Variable, depending on the specification of smart card..

Usage: The message contains the "Answer to Reset" (ATR) of the SAM card to be sent to host. In general, the ATR conforms to the ISO 7816-3 or EMV 2000 level 1. See these standards for more detail information..

Message element:

Field	Length	Value and description
<STX>	1	<02>
I12	3	Message ID
[ATR]	N	Answer to reset data. Format: Hexadecimal string.
<ETX>	1	<03>
[LRC]	1	Checksum

Message flow: Please refer to message I11.

Message I14 SAM slot Card Deactivate

Format: **<STX>I14<ETX>[LRC]**

Message length: Fixed 6 bytes.

Usage: Upon receiving the card deactivate packet, PP791 sets the active smart card to the deactivate state. If the operation is successful, PP791 replies same packet to confirm. Otherwise, message I0F with the error code is used instead.

Message element:

Field	Length	Value and description
<STX>	1	<02>
I14	3	Message ID
<ETX>	1	<03>
[LRC]	1	Checksum

Message flow:

HOST	Direction	PP791
Message I14	→	
	←	<ACK> (Good LRC) <NAK> (Bad LRC) <EOT> (after 3 NAKs)
	←	Deactivate smart card. Message I14 (success) Message I0F (fail)
<ACK> (Good LRC) <NAK> (Bad LRC) <EOT> (after 3 NAKs)	→	

Message I15 SAM Select Interface

Format: **<STX>I15[IF_code]<ETX>[LRC]**

Message length: Fixed 7 bytes.

Usage: PP791 sets the active interface of the smart card reader. If operation succeeds, PP791 replies with the same packet to confirm. Otherwise, message I0F with error code is used instead. All SAM slot commands will be sent to the card via the active interface.

Message element:

Field	Length	Value and description
<STX>	1	<02>
I15	3	Message ID
[IF_code]	1	Interface code. '1' = SAM 1 '2' = SAM 2 '3' = SAM 3
<ETX>	1	<03>
[LRC]	1	Checksum

Message flow:

HOST	Direction	PP791
Message I15	→	
	←	<ACK> (Good LRC) <NAK> (Bad LRC) <EOT> (after 3 NAKs)
	←	Message I15
<ACK> (Good LRC) <NAK> (Bad LRC) <EOT> (after 3 NAKs)	→	

Message I16 SAM slot C-APDU

Format: **<STX>I16[C-APDU]<ETX>[LRC]**

Message length: Variable 14 to 530 bytes.

Usage: The Command APDU (application protocol data unit) is the data to be sent to the active smart card. PP791 's SAM reader will handle base protocols such as T=0 and T=1, so programmer need only send APDU. In general, PP791 will reply the message I17 (response APDU from card) to host in 1 second. For any error, PP791 will send message I0F with error code back.

Message element:

Field	Length	Value and description
<STX>	1	<02>
I16	3	Message ID
[C-APDU]	8..524	Smart card command APDU. Format: hexadecimal string.
<ETX>	1	<03>
[LRC]	1	Checksum

Message flow:

HOST	Direction	PP791
Message I15	← →	(Select interface and response)
Message I11	← →	(Smart card power on and ATR response)
Message I16	→	
	←	<ACK> (Good LRC) <NAK> (Bad LRC) <EOT> (after 3 NAKs)
	←	Communication with card. Message I17 or I0F
<ACK> (Good LRC) <NAK> (Bad LRC) <EOT> (after 3 NAKs)		

Message I17 SAM slot R-APDU

Format: **<STX>I17[R-APDU]<ETX>[LRC]**

Message length: Variable 10 to 530 bytes.

Usage: After SAM card processes the Command-APDU, it puts the result as the Response-APDU. PP791 packs the Response-APDU into this message packet and sends to host.

Message element:

Field	Length	Value and description
<STX>	1	<02>
I17	3	Message ID
[R-APDU]	4.. 524	Smart card response APDU Format: hexadecimal string.
<ETX>	1	<03>
[LRC]	1	Checksum

Message flow: Please refer to message I16.

Message Q1 Display SWIPE CARD message

Format: **<STX>Q1<ETX>[LRC]**

Message length: Fixed 5 bytes.

Usage: The PIN pad will display the prompt "SWIPE CARD" on its LCD until a card is swiped through the reader slot or Z1 message (reset state) received or CAN key pressed.

After magnetic stripe card swiped, PIN pad will collect and decode the card data, strip start sentinel, end sentinel, and LRC character. Then send the data to the HOST and display "PIN PAD PROCESSING" message.

NOTE: For first time use of PP791, issue Q4 message to enable MSR tracks before issuing Q1.

Message element:

Field	Length	Value and description
<STX>	1	<02>
Q1	2	Message ID
<ETX>	1	<03>
[LRC]	1	Checksum

Message flow:

HOST	Direction	PIN pad
Message Q1	→	
		"SWIPE CARD" displayed on LCD
	←	<ACK> (Good LRC) <NAK> (Bad LRC) <EOT> (after 3 NAKs)
	←	(User swipe magnetic card) Message 81
<ACK> (Good LRC) <NAK> (Bad LRC)	→	

Message Q2Transaction Completed

Format: **<STX>Q2<ETX>[LRC]**

Message length: Fixed 5 bytes.

Usage: Indicate that a transaction is now completed. The PIN pad will display a "Thank You" message for three seconds and then goes to IDLE state.

Note: This message can also be used on PIN transaction (70, Z60, Z62)

Message element:

Field	Length	Value and description
<STX>	1	<02>
Q2	2	Message ID
<ETX>	1	<03>
[LRC]	1	Checksum

Message flow:

HOST	Direction	PIN pad
Message Q2	→	
	←	<ACK> (Good LRC) <NAK> (Bad LRC) <EOT> (after 3 NAKs)
		Display "Thank You" for 3 seconds, followed by idle prompt.

Message Q3Ignore Card Swipe

Format: **<STX>Q3<ETX>[LRC]**

Message length: Fixed 5 bytes.

Usage: The HOST should send a message Q3 after receiving card data and decide not to accept another card temporarily. Upon receiving this message, the PIN pad will display "PIN PAD PROCESSING" prompts and ignore any card swiping.

Message element:

Field	Length	Value and description
<STX>	1	<02>
Q3	2	Message ID
<ETX>	1	<03>
[LRC]	1	Checksum

Message flow:

HOST	Direction	PIN pad
Message Q3	→	
	←	<ACK> (Good LRC) <NAK> (Bad LRC) <EOT> (after 3 NAKs)
		"PIN PAD PROCESSING" displayed on LCD

Message Q4 Enable/Disable Magnetic Card Reader

Format: **<STX>Q4[flag]<ETX>[LRC]**

Message length: Fixed 6 bytes.

Usage: All the tracks are disabled by default (After each re-power on PIN pad). The HOST can use this message to have PIN pad enable or disable the magnetic card reader. Only track 2 is enabled if [flag] field contains '0'. All tracks will be enabled if [flag] field contains a '2'.

NOTE: **Please refer to message 81 for returned magnetic card data format.**

Message element:

Field	Length	Value and description
<STX>	1	<02>
Q4	2	Message ID
[flag]	1	'0': enable Track2 only '1': disable '2': enable all tracks of MSR
<ETX>	1	<03>
[LRC]	1	Checksum

Message flow:

HOST	Direction	PIN pad
Message Q4	→	
	←	<ACK> (Good LRC) <NAK> (Bad LRC) <EOT> (after 3 NAKs)

Message Q5Set MSR Retry Count

Format: **<STX>Q5[RetryCount]<ETX>[LRC]**

Message length: Fixed 6 bytes.

Usage: This command will set a retry count for the MSR swiping initiated by message Q1 and Z90.

If PIN pad cannot decode any data from latest swipe, retry count larger than "0", and timeout is not reached, PIN pad will show "BAD READ" on LCD and waiting for next swipe. Until timeout or retry counter reached maximum. This setting will be kept in battery powered memory and effective all the time.

Message element:

Field	Length	Value and description
<STX>	1	<02>
Q5	2	Message ID
RetryCnt	1	'0' to '9', MSR retry count.
<ETX>	1	<03>
[LRC]	1	Checksum

Message flow:

HOST	Direction	PIN Pad
Message Q5	→	
	←	<ACK> (Good LRC) <NAK> (Bad LRC) <EOT> (after 3 NAKs)
		Save the setting or display error message when RetryCnt out of range.

Message Q6 MSR Operation Control

Format: **`<STX>Q6.[flag]<ETX>[LRC] (request frame)`**

Message length: 7 bytes.

Usage: This command can be used to set MSR output format.

Message element:

Request fame (HOST to PP791)

Field	Length	Value and description
<STX>	1	<02>
Q6	2	Message ID
.	1	<2E>, delimiter
[flag]	1	'0': Clear-Text Card Data '2': Clear-Text Card Data with Sentinels.
<ETX>	1	<03>
[LRC]	1	Checksum

Message flow:

HOST	Direction	PIN pad
Message Q6	→	
	←	<ACK> (Good LRC) <NAK> (Bad LRC) <EOT> (after 3 NAKs)
	←	Message Q6 (echo of request frame when success) or <EOT> (when format error.)
<ACK> / <NAK> / <EOT>	→	

Message Q7MSR Mode Query

Format: **<STX>Q7<ETX>[LRC] (request frame)**

<STX>Q7[status]<ETX>[LRC] (response frame)

Message length: Fixed 5 bytes for request, 6 bytes for response.

Usage: This command will query MSR processing option.

Message element:

Request fame (HOST to PP791)

Field	Length	Value and description
<STX>	1	<02>
Q7	2	Message ID
<ETX>	1	<03>
[LRC]	1	Checksum

Response fame (PP791 to HOST)

Field	Length	Value and description
<STX>	1	<02>
Q7	2	Message ID
[status]	1	'0': Clear-Text Card Data '2': Clear-Text Card Data with Sentinels.
<ETX>	1	<03>
[LRC]	1	Checksum

Message flow:

HOST	Direction	PIN pad
Message Q7 (request)	→	
	←	<ACK> (Good LRC) <NAK> (Bad LRC) <EOT> (after 3 NAKs)
	←	Message Q7 (response)
<ACK> / <NAK> / <EOT>	→	

Message Q8Display TAP CARD message

Format: **<STX>Q8<ETX>[LRC]**

Message length: Fixed 5 bytes.

Usage: The PIN pad will display the prompt "TAP CARD" on its LCD until a contactless card is taped or Z1 message (reset state) received or CAN key pressed.

After contactless card taped, PIN pad will collect card data then send the data to the HOST.

NOTE: Before issue message Q8 to retrieve contactless card data after PIN pad re-power on, issue QA message to enable contactless module's tracks.

Message element:

Field	Length	Value and description
<STX>	1	<02>
Q8	2	Message ID
<ETX>	1	<03>
[LRC]	1	Checksum

Message flow:

HOST	Direction	PIN pad
Message Q8	→	
		"TAP CARD" displayed on LCD
	←	<ACK> (Good LRC) <NAK> (Bad LRC) <EOT> (after 3 NAKs)
	←	(User taps contactless card) Message 83
<ACK> (Good LRC) <NAK> (Bad LRC)	→	

Message Q9Display SWIPE / TAP CARD message

Format: **<STX>Q9<ETX>[LRC]**

Message length: Fixed 5 bytes.

Usage: The PIN pad will display the prompt "SWIPE / TAP CARD" on its LCD until a card is swiped or taped through the reader slot or Z1 message (reset state) received or CAN key pressed.

After magnetic stripe card swiped, PIN pad will collect and decode the card data, strip start sentinel, end sentinel, and LRC character. Then send the data to the HOST and display "PIN PAD PROCESSING" message.

After contactless card taped, PIN pad will collect card data and send the data to the HOST and display "PIN PAD PROCESSING" message.

NOTE: Before issue message Q9 to retrieve contactless / magnetic stripe card data after PIN pad re-power on, issue Q4 and QA messages to enable contactless module's tracks and magnetic stripe reader tracks.

NOTE: The returned message will be with "81" or "83" according the source of card data.

Message element:

Field	Length	Value and description
<STX>	1	<02>
Q9	2	Message ID
<ETX>	1	<03>
[LRC]	1	Checksum

Message flow:

HOST	Direction	PIN pad
Message Q9	→	
		"SWIPE/TAP CARD" displayed on LCD
	←	<ACK> (Good LRC) <NAK> (Bad LRC) <EOT> (after 3 NAKs)
	←	(User swipe magnetic card) Message 81 (User taps contactless card) Message 83
<ACK> (Good LRC) <NAK> (Bad LRC)	→	

Message QA Enable/Disable Contactless Card Reader

Format: **<STX>QA[flag]<ETX>[LRC]**

Message length: Fixed 6 bytes.

Usage: All the tracks are disabled by default (After each re-power on PIN pad). The HOST can use this message to have PIN pad enable or disable the contact-less card reader. Only track 2 is enabled if [flag] field contains '0'. Both tracks will be enabled if [flag] field contains a '2'.

NOTE: **Please refer to message 83 for returned magnetic card data format.**

Note. QA message will set prefix <81>, <82> and <83> as prefix of track data 1, 2 and 3.

Message element:

Field	Length	Value and description
<STX>	1	<02>
QA	2	Message ID
[flag]	1	'0': enable Track2 only '1': disable '2': enable all tracks of MSR
<ETX>	1	<03>
[LRC]	1	Checksum

Message flow:

HOST	Direction	PIN pad
Message QA	→	
	←	<ACK> (Good LRC) <NAK> (Bad LRC) <EOT> (after 3 NAKs) (<EOT>Contactless card reader is initialized failed)

Message QB MSR Device (Not) Always Detection

Format: **<STX>QB[flag]<ETX>[LRC]**

Message length: Fixed 6 bytes.

Usage: If the always detection is turned on, PIN pad will return the magnetic card data each swipe under idle mode (Terminal does not have to issue message Q1 for each card data). If this functionality is turned off, terminal should issue message Q1 to get the magnetic card data.

Note. If the card track is all disabled (refer to message Q4), terminal will always get null magnetic card data.

Message element: **Request fame (HOST to PP791)**

Field	Length	Value and description
<STX>	1	<02>
QB	2	Message ID
[flag]	1	'0': Not always detect '1': Always detect.
<ETX>	1	<03>
[LRC]	1	Checksum

Response fame (PP791 to HOST)

Field	Length	Value and description
<STX>	1	<02>
QB	2	Message ID
[status]	1	'0' = Setup successfully '1' = Invalid flag
<ETX>	1	<03>
[LRC]	1	Checksum

Message flow:

HOST	Direction	PIN pad
Message QB	→	
	←	<ACK> (Good LRC) / <NAK> (Bad LRC) <EOT> (after 3 NAKs)
	←	Message QB(response)
<ACK> / <NAK> / <EOT>	→	

Message QC Contactless module (Not) Always Detection

Format: **<STX>QC[flag]<ETX>[LRC]**

Message length: Fixed 6 bytes.

Usage: If the always detection is turned on, PIN pad will return the contactless card data each swipe under idle mode (Terminal does not have to issue message Q8/Q9 for each card data). If this functionality is turned off, terminal should issue message Q8/Q9 to get the contactless card data.

Note. If the card track is all disabled (refer to message QA), terminal will always get null magnetic card data.

Message element: **Request fame (HOST to PP791)**

Field	Length	Value and description
<STX>	1	<02>
QC	2	Message ID
[flag]	1	'0': Not always detect '1': Always detect.
<ETX>	1	<03>
[LRC]	1	Checksum

Response fame (PP791 to HOST)

Field	Length	Value and description
<STX>	1	<02>
QC	2	Message ID
[status]	1	'0' = Setup successfully '1' = Invalid flag
<ETX>	1	<03>
[LRC]	1	Checksum

Message flow:

HOST	Direction	PIN pad
Message QC	→	
	←	<ACK> (Good LRC) / <NAK> (Bad LRC) <EOT> (after 3 NAKs)
	←	Message QB(response)
<ACK> / <NAK> / <EOT>	→	

Message QD Contactless Card Data with/without Start/End sentinels

Format: **<STX>QD[flag]<ETX>[LRC]**

Message length: Fixed 6 bytes.

Usage: The default value for PIN pad is to ignore the start/end sentinels and then return the contactless card data. User can apply this message to make PIN pad return the contactless card data with start/end sentinels.

Message element:

Request fame (HOST to PP791)

Field	Length	Value and description
<STX>	1	<02>
QD	2	Message ID
.	1	<2E>
[flag]	1	'0': Without Start/End sentinels '1': With Start/End sentinels
<ETX>	1	<03>
[LRC]	1	Checksum

Response fame (PP791 to HOST)

Field	Length	Value and description
<STX>	1	<02>
QD	2	Message ID
[status]	1	'0': Without Start/End sentinels '1': With Start/End sentinels
<ETX>	1	<03>
[LRC]	1	Checksum

Message flow:

HOST	Direction	PIN pad
Message QD	→	
	←	<ACK> (Good LRC) <NAK> (Bad LRC) <EOT> (after 3 NAKs)
	←	Message QD (response)
<ACK> / <NAK> / <EOT>	→	

Message 81 MSR Card Data

Format: **<STX>81.[trk1 data]<FS>[trk2 data]<FS>[trk3 data]<FS>[BIN record]<ETX>[LRC]**

<STX>81@[trk1 data]<FS>[trk2 data]<FS>[trk3 data]<ETX>[LRC]

<STX>81&[Check PAN result 1]<FS>[Check PAN result 2]<ETX>[LRC]

Message length: Variable, depending on card image in buffer.

Usage: PIN pad uses this message to send back the information read from last card swipe. Data are transmitted using ASCII string as defined by ISO 7811 format specification. Under different type, PIN pad returns the card data in different format. If message Q4 is issued and PIN pad is set as track 2 only, the returned message 81 will contain only track 2 data without filed separator.

If BIN table processing is enabled and a BIN record search is successful (Please refer to message **Exx** for detailed information), the BIN will be attached in the end of magnetic strip card data.

Message element:

Field	Length	Value and description
<STX>	1	<02>
81	2	Message ID
.	1	<2E>
[trk1]	N	Variable length, data of track 1.
<FS>	1	<1C>, field separator.
[trk2]	N	Variable length, data of track 2.
<FS>	1	<1C>, field separator.
[trk3]	N	Variable length, data of track 3.
<FS>	1	<1C>, filed separator, if BIN processing is enabled and a match record is found.
[BIN record]	16	Hex string. If BIN processing is enabled and a match record is found.
<ETX>	1	<03>
[LRC]	1	Checksum

Message flow:

Under Operation Type 0, 1, 2 and 3

HOST	Direction	PIN pad
Message Q1 or Q9	→	
		"SWIPE CARD" displayed on LCD
	←	<ACK> (Good LRC) / <NAK> (Bad LRC) <EOT> (after 3 NAKs)
	←	(User swipe magnetic card) Message 81 (**81.**)
<ACK> (Good LRC) <NAK> (Bad LRC)	→	

Message 83 Contact-less Card Data

Format: **<STX>83.[trk1 data]<FS>[trk2 data]<FS>[trk3 data]<ETX>[LRC]**

Message length: Variable, depending on card image in buffer.

Usage: PIN pad uses this message to send back the information read from last contact-less card tap. If message QA is issued and PIN pad is set as track 2 only, the returned message 83 will contain only track 2 data without filed split.

Message element:

Field	Length	Value and description
<STX>	1	<02>
83	2	Message ID
.	1	<2E>
[trk1]	N	Variable length, data of track 1.
<FS>	1	<1C>, field separator.
[trk2]	N	Variable length, data of track 2.
<FS>	1	<1C>, field separator.
[trk3]	N	Variable length, data of track 3.
<ETX>	1	<03>
[LRC]	1	Checksum

Message flow: Please refer to message Q8 or Q9.

Section 12 Display functionality messages

PP791 provides a display with resolution 320x240 for graphic and 8*8, 8*16, 16*16 and 16*24 character sets for text mode and supports many display functionalities for user.

Font size selection:

PP791 support 8*8 (0x20~0x7F), 8*16, 16*16 and 16*24 (0x20~0xFF) character sets for selection.

Foreground/Background color selection:

User can alternate the foreground and background color.

Screen save setting:

Set the parameters for screen save functionality.

Enable / disable screen save:

Enable or disable the screen save functionality.

Screen save preview:

The screen save will be launched once.

Message B1 Font Size Selection

Format: **<STX>B1[Font Size]<ETX>[LRC] (request)**

<STX>B2[Response]<ETX>[LRC] (response)

Message length: Fixed 6.

Usage: PIN pad supports 4 font sizes, 8x8, 8x16, 16x16 and 16x24. Use this message can change the displayed font size. If the font size is set to 8x8, only the low page characters can be displayed (<0x80), the high page characters will be replaced by space character.

Request frame (HOST to PP791)

Field	Length	Value and description
<STX>	1	<02>
B1	2	Message ID
[Font Size]	1	'0': 8x8 font size '1': 8x16 font size '2': 16x16 font size '3': 16x24 font size
<ETX>	1	<03>
[LRC]	1	Checksum

Response frame (PP791 to HOST)

Field	Length	Value and description
<STX>	1	<02>
B2	2	Message ID
[Response]	1	'0': Setup successfully. '1': Format error '2': Not support
<ETX>	1	<03>
[LRC]	1	Checksum

Message flow:

HOST	Direction	PP791
Message B1 (Request)	→	
	←	<ACK> (Good LRC) <NAK> (Bad LRC) <EOT> (after 3 NAKs)
		Message B2 (response)
<ACK> (Good echo) <NAK> (Bad LRC) <EOT> (after 3 NAKs)	→	

Message B3 Font Color (Foreground / Backgroud) Selection

Format: **<STX>B3[Foreground][Background]<ETX>[LRC] (request)**

<STX>B4[Response]<ETX>[LRC] (response)

Message length: Fixed 17 bytes.

Usage: Use this message to set new color of font and background. The format is RR/GG/BB.

Request frame (HOST to PP791)

Field	Length	Value and description
<STX>	1	<02>
B3	2	Message ID
[Foreground]	6	Hex String. Format: RRGGBB
[Background]	6	Hex String. Format: RRGGBB
<ETX>	1	<03>
[LRC]	1	Checksum

Response frame (PP791 to HOST)

Field	Length	Value and description
<STX>	1	<02>
B4	2	Message ID
[Response]	1	'0': Setup successfully. '1': Format error
<ETX>	1	<03>
[LRC]	1	Checksum

Message flow:

HOST	Direction	PP791
Message B3 (Request)	→	
	←	<ACK> (Good LRC) <NAK> (Bad LRC) <EOT> (after 3 NAKs)
		Message B4 (response)
<ACK> (Good echo) <NAK> (Bad LRC) <EOT> (after 3 NAKs)	→	

Message BB Screen Saver Setting

Format: **<STX>BB[Waiting Time][Screen Saver Type]<ETX>[LRC] (request)**

<STX>BC[Response]<ETX>[LRC] (response)

Message length: Fixed 9 bytes.

Usage: PP791 has screen saver functionality. Use this message to select one of screen savers and set the waiting time, and use message BD to enable the screen saver. While PP791 idles (without receiving messages, keystrokes, or screen touch) over the time specified in [Waiting Time], the screen saver will be activated. The minimum waiting time should be greater then or equal to 5 seconds.

Screen saver - Jpeg Show: display all jpeg pictures in rotation (at least one JPEG image should be loaded into PP791).
Screen saves will be launched each time in rotation.

Request frame (HOST to PP791)

Field	Length	Value and description
<STX>	1	<02>
BB	2	Message ID
[Waiting Time]	3	005~999
[Screen Saver Type]	1	'1': Jpeg show
<ETX>	1	<03>
[LRC]	1	Checksum

Response frame (PP791 to HOST)

Field	Length	Value and description
<STX>	1	<02>
BC	2	Message ID
[Response]	1	'0': Valid parameter. '1': Invalid parameter.
<ETX>	1	<03>
[LRC]	1	Checksum

Message flow:

HOST	Direction	PP791
Message BB (Request)	→	
	←	<ACK> (Good LRC) <NAK> (Bad LRC) <EOT> (after 3 NAKs)
		Message BC (response)
<ACK> (Good echo) <NAK> (Bad LRC) <EOT> (after 3 NAKs)	→	

Message BD Enable / Disable Screen Saver

Format: **<STX>BD[Op]<ETX>[LRC]** **(request)**

<STX>BE[Response]<ETX>[LRC] **(response)**

Message length: Fixed 6 bytes.

Usage: Use this message to enable / disable screen saver.

Request frame (HOST to PP791)

Field	Length	Value and description
<STX>	1	<02>
BD	2	Message ID
[Op]	1	'0': Disable screen saver functionality. '1': Enable screen saver functionality.
<ETX>	1	<03>
[LRC]	1	Checksum

Response frame (PP791 to HOST)

Field	Length	Value and description
<STX>	1	<02>
BE	2	Message ID
[Response]	1	'0': Valid parameter. '1': Invalid parameter.
<ETX>	1	<03>
[LRC]	1	Checksum

Message flow:

HOST	Direction	PP791
Message BD (Request)	→	
	←	<ACK> (Good LRC) <NAK> (Bad LRC) <EOT> (after 3 NAKs)
		Message BE (response)
<ACK> (Good echo) <NAK> (Bad LRC) <EOT> (after 3 NAKs)	→	

Message BFScreen Saver Preview / Stop Preview

Format: **<STX>BF[Op]<ETX>[LRC]** **(request)**

Message length: Fixed 6 bytes.

Usage: Use this message to launch screen saver directly or turn it off. User can also issue any other message to turn off screen saver.

Request frame (HOST to PP791)

Field	Length	Value and description
<STX>	1	<02>
BF	2	Message ID
[Op]	1	'0': Stop screen saver preview '1': Screen Saver Preview
<ETX>	1	<03>
[LRC]	1	Checksum

Message flow:

HOST	Direction	PP791
Message BF (Request)	→	
	←	<ACK> (Good LRC) <NAK> (Bad LRC) <EOT> (after 3 NAKs)

Section 13 JPEG File Operation messages

PP791 supports several JPEG file operation messages, customer could use JPEG Tool provided by UIC to query PIN pad to get a JPEG file table, and customer could delete the existed JPEG files from PIN pad and could select JPEG files for play. In addition, customer could download a JPEG file into PIN pad or upload a JPEG file from PIN pad. Below are JPEG file operation messages those PP791 supports:

J0	JPEG File Table Initialization
J1	Query JPEG File Table
J2	Select JPEG File
J3	Delete JPEG File
J4	Download JPEG File
J5	Upload JPEG File
J6	Play JPEG File
J7	Set JPEG File As Idle Prompt
J8	Enable/Disable Idle Logo Functionality
J9	Show JPEG File

Message J0 JPEG File Table Initialization

Format: **<STX>J0<ETX>[LRC]**

Request frame (HOST to PIN Pad)

<STX>J0[Status]<ETX>[LRC]

Response frame (PIN Pad to HOST)

Message length: Fixed 5 bytes for request frame and 6 bytes for response frame.

Usage: This message is used to initialize the JPEG file table from terminal.

Message element:

Request frame (HOST to PIN Pad)

Field	Length	Value and description
<STX>	1	<02>
J0	2	Message ID
<ETX>	1	<03>
[LRC]	1	Checksum

Response frame (PIN Pad to HOST)

Field	Length	Value and description
<STX>	1	<02>
J0	2	Message ID
[Status]	1	'0': Success. '1': Failure.
<ETX>	1	<03>
[LRC]	1	Checksum

Message flow:

HOST	Direction	PIN Pad
Message J0	→	
	←	<ACK> (Good LRC) <NAK> (Bad LRC) <EOT> (after 3 NAKs)
	←	Message J0
<ACK> / <NAK> / <EOT>	→	

Message J1 Query JPEG File Table

Format: **<STX>J1<ETX>[LRC]**

Request frame (HOST to PIN Pad)

<STX>J1[PktType][Status_1][FileName_1]<FS>
[Status_2][FileName_2]<FS>...
[Status_N-1][FileName_N-1]<FS>
[Status_N][FileName_N]<ETX>[LRC]

(where the value of 'N' is total amount of the JPEG files)

Response frame (PIN Pad to HOST)

Message length: Fixed 5 bytes for request frame and variable 5 to 540 bytes for response frame.

Usage: This message is used to query JPEG file table from terminal.

Message element:

Request frame (HOST to PIN Pad)

Field	Length	Value and description
<STX>	1	<02>
J1	2	Message ID
<ETX>	1	<03>
[LRC]	1	Checksum

Response frame (PIN Pad to HOST)

Field	Length	Value and description
<STX>	1	<02>
J1	2	Message ID
[PktType]	1	'0' = first or middle of multiple packets. '1' = last or only packet.
[Status_1]	1	'0': Unselect. (optional) '1': Select.
[FileName_1]	1-15	File name 1 (optional)
<FS>	1	<1C>, field separator (optional)
[Status_2]	1	'0': Unselect. (optional) '1': Select.
[FileName_2]	1-15	File name 2 (optional)
<FS>	1	<1C>, field separator (optional)
……	……..	……..
[Status_N-1]	1	'0': Unselect. (optional) '1': Select.

[FileName_N-1]	1-15	File name N-1 (optional)
<FS>	1	<1C>, field separator (optional)
[Status_N]	1	'0': Unselect. (optional) '1': Select.
[FileName_N]	1-15	File name N (optional)
<ETX>	1	<03>
[LRC]	1	Checksum

Message flow:

HOST	Direction	PIN Pad
Message J1	→	
	←	<ACK> (Good LRC) <NAK> (Bad LRC) <EOT> (after 3 NAKs)
	←	Message J1 ([PktType] = '0')
<ACK> / <NAK> / <EOT>	→	
Message J1	→	
	←	<ACK> / <NAK> / <EOT>
	←	Message J1 ([PktType] = '1')
<ACK> / <NAK> / <EOT>	→	

Message J2 Select JPEG File

Format: **<STX>J2[control][FileName_1]<FS>[FileName_2]<FS>...**
[FileName_N-1]<FS>[FileName_N]<ETX>[LRC]

(where the value of 'N' is total amount of the JPEG files)

Request frame (HOST to PIN Pad)

<STX>J2[Status_1]<FS>[Status_2]<FS>...
[Status_N-1]<FS>[Status_N]<ETX>[LRC]

(where the value of 'N' is total amount of the JPEG files)

Response frame (PIN Pad to HOST)

Message length: Variable 7 to 540 bytes for request frame, and variable 5 to 44 bytes for response frame.

Usage: This message is used to select or unselect JPEG files from terminal's display list.

Message element:

Request frame (HOST to PIN Pad)

Field	Length	Value and description
<STX>	1	<02>
J2	2	Message ID
[control]	1	'0': Unselect. '1': Select.
[FileName_1]	1-15	File name 1
<FS>	1	<1C>, field separator (optional)
[FileName_2]	1-15	File name 2 (optional)
<FS>	1	<1C>, field separator (optional)
……	……..	……..
[FileName_N-1]	1-15	File name N-1 (optional)
<FS>	1	<1C>, field separator (optional)
[FileName_N]	1-15	File name N (optional)
<ETX>	1	<03>
[LRC]	1	Checksum

Response frame (PIN Pad to HOST)

Field	Length	Value and description
<STX>	1	<02>
J2	2	Message ID
[Status_1]	1	'0': Success, '1': Failure, '2': Format error.
<FS>	1	<1C>, field separator (optional)
[Status_2]	1	'0': Success, '1': Failure. (optional)
<FS>	1	<1C>, field separator (optional)
……	……..	……..
[Status_N-1]	1	'0': Success, '1': Failure. (optional)
<FS>	1	<1C>, field separator (optional)
[Status_N]	1	'0': Success, '1': Failure. (optional)
<ETX>	1	<03>
[LRC]	1	Checksum

Message flow:

HOST	Direction	PIN Pad
Message J2	→	
	←	<ACK> (Good LRC) <NAK> (Bad LRC) <EOT> (after 3 NAKs)
	←	Message J2
<ACK> / <NAK> / <EOT>	→	

Message J3 Delete JPEG File

Format: **<STX>J3[FileName_1]<FS>[FileName_2]<FS>...**

[FileName_N-1]<FS>[FileName_N]<ETX>[LRC]

(where the value of 'N' is total amount of the JPEG files)

Request frame (HOST to PIN Pad)

<STX>J3[Status_1]<FS>[Status_2]<FS>...

[Status_N-1]<FS>[Status_N]<ETX>[LRC]

(where the value of 'N' is total amount of the JPEG files)

Response frame (PIN Pad to HOST)

Message length: Variable 6 to 540 bytes for request frame, and variable 5 to 44 bytes for response frame.

Usage: This message is used to delete JPEG files from terminal's display list.

Message element:

Request frame (HOST to PIN Pad)

Field	Length	Value and description
<STX>	1	<02>
J3	2	Message ID
[FileName_1]	1-15	File name 1
<FS>	1	<1C>, field separator (optional)
[FileName_2]	1-15	File name 2 (optional)
<FS>	1	<1C>, field separator (optional)
……	……..	……..
[FileName_N-1]	1-15	File name N-1 (optional)
<FS>	1	<1C>, field separator (optional)
[FileName_N]	1-15	File name N (optional)
<ETX>	1	<03>
[LRC]	1	Checksum

Response frame (PIN Pad to HOST)

Field	Length	Value and description
<STX>	1	<02>
J3	2	Message ID
[Status_1]	1	'0': Success, '1': Failure, '2': Format error.
<FS>	1	<1C>, field separator (optional)
[Status_2]	1	'0': Success, '1': Failure. (optional)
<FS>	1	<1C>, field separator (optional)
……	……..	……..
[Status_N-1]	1	'0': Success, '1': Failure. (optional)
<FS>	1	<1C>, field separator (optional)
[Status_N]	1	'0': Success, '1': Failure. (optional)
<ETX>	1	<03>
[LRC]	1	Checksum

Message flow:

HOST	Direction	PIN Pad
Message J3	→	
	←	<ACK> (Good LRC) <NAK> (Bad LRC) <EOT> (after 3 NAKs)
	←	Message J3
<ACK> / <NAK> / <EOT>	→	

Message J4 Download JPEG File

Format: **<STX>J4[PktType][SeqNo][Force]<FS>**

[FileName]<FS>[Size][Data]<ETX>[LRC]

Request frame (HOST to PIN Pad)

<STX>J4[Status]<ETX>[LRC]

Response frame (PIN Pad to HOST)

Message length: Variable 22 to 538 bytes for request frame, and fixed 6 bytes for response frame.

Usage: This message is used to download a JPEG file from terminal.

Message element:

Request frame (HOST to PIN Pad)

Field	Length	Value and description
<STX>	1	<02>
J4	2	Message ID
[PktType]	1	'0' = first or middle of multiple packets. '1' = last or only packet.
[SeqNo]	3	'000' to '999', for onetime only packet, set to '000'.
[Foce]	1	'0' = ask before overwrite, '1' = force overwrite
<FS>	1	<1C>, field separator
[FileName]	0-15	JPEG file name (optional)
<FS>	1	<1C>, field separator
[Size]	3	'000' to '523', size of [ImgData] in bytes
[ImgData]	0-523	Base 64 format data (optional)
<ETX>	1	<03>
[LRC]	1	Checksum

Response frame (PIN Pad to HOST)

Field	Length	Value and description
<STX>	1	<02>
J4	2	Message ID
[Status]	1	'0': Ready for next J4 packet. '1': [PktType] has invalid value. '2': [SeqNo] has invalid value. '3': [Force] has invalid value. '4': [FileName] has invalid value. '5': [Size] has invalid value. '6': [ImgData] has invalid value.

		'7': Number of <FS> is wrong. 'A': File size is zero or too large. 'B': Null file name. 'C': File name is too long or user abort. 'D': No more space. 'E': File is too large to stored to exist file's location. 'F': Download Success.
<ETX>	1	<03>
[LRC]	1	Checksum

Message flow:

HOST	Direction	PIN Pad
Message J4 ([PktType] = '0' and [SeqNo] = '000')	→	
	←	<ACK> (Good LRC) <NAK> (Bad LRC) <EOT> (after 3 NAKs)
	←	Message J4 ([Status] = '0')
<ACK> / <NAK> / <EOT>	→	
Message J4 ([PktType] = '0' and [SeqNo] = '001'-'998')	→	
	←	<ACK> / <NAK> / <EOT>
	←	Message J4 ([Status] = '0')
……..	……..	……
<ACK> / <NAK> / <EOT>	→	
Message J4 ([PktType] = '1')	→	
	←	<ACK> / <NAK> / <EOT>
	←	Message J4 ([Status] = 'F')
<ACK> / <NAK> / <EOT>	→	

Message J5 Upload JPEG File

Format: **<STX>J5[control]<FS>[FileName]<ETX>[LRC]**

Request frame (HOST to PIN Pad)

<STX>J5[PktType][SeqNo][Size][Data]<ETX>[LRC]

Response frame (PIN Pad to HOST)

Message length: Variable 6 to 21 bytes for request frame, and variable 12 to 536 bytes for response frame.

Usage: This message is used to upload a JPEG file from terminal.

Message element:

Request frame (HOST to PIN Pad)

Field	Length	Value and description
<STX>	1	<02>
J5	2	Message ID
[control]	1	'0': First command for upload, [FileName] is required. '1': Ready for next J5 packet, [FileName] is ignored.
[FileName]	1-15	File name (Option)
<ETX>	1	<03>
[LRC]	1	Checksum

Response frame (PIN Pad to HOST)

Field	Length	Value and description
<STX>	1	<02>
J5	2	Message ID
[PktType]	1	'0' = First or middle of multiple packets. '1' = Last or only packet. '2': Null file name. '3': File name is not found. '4': Buffer is not enough. '5': Format error.
[SeqNo]	3	'000' to '999', for onetime only packet, set to '000'.
[Size]	3	'000' to '524', size of [Data] in bytes
[Data]	0-524	Base 64 format data
<ETX>	1	<03>
[LRC]	1	Checksum

Message flow:

HOST	Direction	PIN Pad
Message J5 ([control] = '0')	→	
	←	<ACK> (Good LRC) <NAK> (Bad LRC) <EOT> (after 3 NAKs)
	←	Message J5 ([PktType] = '0' and [SeqNo] = '000')
<ACK> / <NAK> / <EOT>	→	
Message J5 ([control] = '1')	→	
	←	<ACK> / <NAK> / <EOT>
	←	Message J5 ([PktType] = '0' and [SeqNo] = '001'-'998')
<ACK> / <NAK> / <EOT>		
……	……..	……..
Message J5 ([control] = '1')	→	
	←	<ACK> / <NAK> / <EOT>
	←	Message J5 ([PktType] = '1')
<ACK> / <NAK> / <EOT>	→	

Message J6 Play JPEG File

Format: **<STX>J6<ETX>[LRC]**

Request frame (HOST to PIN Pad)

Message length: Fixed 5 bytes.

Usage: This message is used to play the JPEG files those have been selected from terminal. Those selected Jpeg files will be showed up sequentially until any operation (swiping card, pressing any key, tapping screen or receiving command) that changes the display.

Message element:

Request frame

Field	Length	Value and description
<STX>	1	<02>
J6	2	Message ID
<ETX>	1	<03>
[LRC]	1	Checksum

Message flow:

HOST	Direction	PIN Pad
Message J6	→	
	←	<ACK> (Good LRC) <NAK> (Bad LRC) <EOT> (after 3 NAKs)

Message J7 Set JPEG File As Idle Prompt

Format: **<STX>J7[Jpeg Name]<ETX>[LRC] (request frame)**

<STX>J7[Result]<ETX>[LRC] (response frame)

Message length: Variable 6 ~ 20 byte.

Usage: This message is used to set a JPEG file as idle logo.

Message element:

Request frame (HOST to PIN pad)

Field	Length	Value and description
<STX>	1	<02>
J7	2	Message ID
[Jpeg Name]	1~15	ASCII string, Jpeg file name.
<ETX>	1	<03>
[LRC]	1	Checksum

Response frame (PIN pad to HOST)

Field	Length	Value and description
<STX>	1	<02>
J7	2	Message ID
[Result]	1	'0' = Setup successfully. '1' = Invalid length of file name. '2' = Fail to setup.
<ETX>	1	<03>
[LRC]	1	Checksum

Message flow:

HOST	Direction	PIN Pad
Message J7	→	
	←	<ACK> (Good LRC) <NAK> (Bad LRC) <EOT> (after 3 NAKs)
		Message J7 (response)
<ACK> (Good echo) <NAK> (Bad LRC) <EOT> (after 3 NAKs)	→	

Message J8 Enable/Disable Idle Logo Functionality

Format: **<STX>J8[Op]<ETX>[LRC] (request frame)**

<STX>J8[Result]<ETX>[LRC] (response frame)

Message length: Fixed 6 byte.

Usage: This message is used to enable/disable idle logo functionality. When it is enabled, idle logo and date/time will not be displayed. In order to successfully enable idle logo functionality, there should be a JPEG file that is assigned as idle logo.

Message element:

Request frame (HOST to PIN pad)

Field	Length	Value and description
<STX>	1	<02>
J8	2	Message ID
[Op]	1	0 : Disable 1 : Enable
<ETX>	1	<03>
[LRC]	1	Checksum

Response frame (PIN pad to HOST)

Field	Length	Value and description
<STX>	1	<02>
J8	2	Message ID
[Result]	1	'0' = Setup successfully. '1' = Invalid Op parameter. '2' = Fail to setup (No Jpeg file is assigned)
<ETX>	1	<03>
[LRC]	1	Checksum

Message flow:

HOST	Direction	PIN Pad
Message J8	→	
	←	<ACK> (Good LRC) <NAK> (Bad LRC) <EOT> (after 3 NAKs)
		Message J8 (response)
<ACK> (Good echo) <NAK> (Bad LRC) <EOT> (after 3 NAKs)	→	

Message J9 Show JPEG File

Format: **<STX>J9[Jpeg Name]<ETX>[LRC] (request frame)**

<STX>J9[Result]<ETX>[LRC] (response frame)

Message length: Variable 6 ~ 20 byte.

Usage: This message is used to make PIN pad show the assigned Jpeg file. The assigned Jpeg file will be showed up once until any operation (pressing Cancel key or receiving command) that changes the display.

Message element:

Request frame (HOST to PIN pad)

Field	Length	Value and description
<STX>	1	<02>
J9	2	Message ID
[Jpeg Name]	1~15	ASCII string, Jpeg file name.
<ETX>	1	<03>
[LRC]	1	Checksum

Response frame (PIN pad to HOST)

Field	Length	Value and description
<STX>	1	<02>
J9	2	Message ID
[Result]	1	'0' = Success. '1' = Invalid length of file name. '2' = No assigned Jpeg file.
<ETX>	1	<03>
[LRC]	1	Checksum

Message flow:

HOST	Direction	PIN Pad
Message J9	→	
	←	<ACK> (Good LRC) <NAK> (Bad LRC) <EOT> (after 3 NAKs)
		Message J9 (response)
<ACK> (Good echo) <NAK> (Bad LRC) <EOT> (after 3 NAKs)	→	
		The screen will not be changed until pressing Cancel or receiving any command.

Message JA Set Boot Logo

Format: **<STX>JA[PktType][SeqNo]<FS>[Size][Data]<ETX>[LRC]**

Request frame (HOST to PIN Pad)

<STX>JA[Status]<ETX>[LRC]

Response frame (PIN Pad to HOST)

Message length: Variable 22 to 538 bytes for request frame, and fixed 6 bytes for response frame.

Usage: This message is used to download a bitmap file for boot logo from terminal .

Message element:

Request frame (HOST to PIN Pad)

Field	Length	Value and description
<STX>	1	<02>
JA	2	Message ID
[PktType]	1	'0' = first or middle of multiple packets. '1' = last or only packet.
[SeqNo]	3	'000' to '999', for onetime only packet, set to '000'.
<FS>	1	<1C>, field separator
[Size]	3	'000' to '525', size of [ImgData] in bytes
[ImgData]	0-525	Base 64 format data (optional)
<ETX>	1	<03>
[LRC]	1	Checksum

Response frame (PIN Pad to HOST)

Field	Length	Value and description
<STX>	1	<02>
JA	2	Message ID
[Status]	1	'0': Ready for next JA packet. '1': [PktType] has invalid value. '2': [SeqNo] has invalid value. '3': Number of <FS> is wrong. '4': [Size] has invalid value. '5': [ImgData] has invalid value. '6': No more space. '7': Bitmap file format error. 'F': Download Success.
<ETX>	1	<03>
[LRC]	1	Checksum

Message flow:

HOST	Direction	PIN Pad
Message JA ([PktType] = '0' and [SeqNo] = '000')	→	
	←	<ACK> (Good LRC) <NAK> (Bad LRC) <EOT> (after 3 NAKs)
	←	Message JA ([Status] = '0')
<ACK> / <NAK> / <EOT>	→	
Message JA ([PktType] = '0' and [SeqNo] = '001'-'998')	→	
	←	<ACK> / <NAK> / <EOT>
	←	Message JA ([Status] = '0')
……..	……..	……
<ACK> / <NAK> / <EOT>	→	
Message JA ([PktType] = '1')	→	
	←	<ACK> / <NAK> / <EOT>
	←	Message JA ([Status] = 'F')
<ACK> / <NAK> / <EOT>	→	

Appendix A Key management

This PIN pad is designed to encrypt Personal Identification Numbers (PIN) as they are entered from the keypad, store the encrypted data in its memory and then transmit it to the HOST as requested.

Because the data-encryption standard (DES) and RSA algorithm are in the public domain, the security of the functions of the PP791 depend on the security of the key that is used in processing the algorithm. Therefore, after you load cryptographic keys into the PP791, the keys cannot be read. They are placed AES encrypted by a randomly generated AES key, resident in a battery-powered register. Once security is breached, the AES key will be erased, and all encrypted DES master keys become unusable.

You can design a secure method for handling your keys when you are isolated from the PIN keypad, using the provisions for loading the keys. Randomly generate your keys, and store and distribute your keys in a secure, controlled manner that you can audit.

An independent Tamper Resistant Security Module (TRSM) is required for secure key injection process. UIC provides a software key injection utility (UICKIT for Windows) as demo for safely and manageable key injection procedure. Please refer to UICKIT programming manual for detail.

PP791 supports following management schemes:

1. **Master/session key (MK/SK):**

   PP791 can store 32 (16 keys for future use) master keys, key ID 0 to 9 are for MK/SK PIN entry (They can be PIN master key or PIN key), key ID B to E is for generate or verify MAC, depend on its usage and mode settings. (They can be MAC master key or MAC key), F for master key transportation (It can be only key loading key) and G (It can be MSR master key or MSR data key) for MSR data transportation. These master keys cannot be used in other ways (e.g. designer cannot use PIN entry keys for MAC generation.) Session keys (working keys) are transmitted from the HOST, encrypted by the master key for every transaction. Customer's PIN is encrypted using the decrypted working key or by selected master key (If the selected one is with key usage "P0"). Thus the master keys must exist before any transaction can take place. PP791 can use 8 bytes DES key format or 16 / 24 bytes Triple DES key format, the working key can also be 16 bytes TDES key.

   When doing transactions using MK/SK scheme, firmware of PP791 applies a DES calculation count limiter (***only 100 transactions are allowed in 5 minutes period***.) to comply with PCI PED security requirement (average one transaction per 30 seconds.) This constraint is set to deter attacker using huge saturation DES transaction to detect master key in PP791.

2. **ANSI TR31 Specified Key Bundle**

   Key Attribute:

   When loading master keys into PP791 in encrypted format, the key data is wrapped by a key bundle specified in ANSI TR-31 2010 specification.

   1. Key usage: indicate what usage of a key.

      "K0", indicates that this key is used for key transportation;

"P0", indicates that this key is used for PIN entry directly;

"D0", indicates that this key is used for data transportation;

"M1" indicates that this key is used for MAC calculation directly by ISO 9797-1 method 1.

"M3" indicates that this key is used for MAC calculation directly by ISO 9797-1 method 3.

"B1", indicates that this key is used for DUKPT initial key (ANSI TR-31 2010).

2. Algorithm: indicate what algorithm will be used with the key.

   "D" : DES algorithm

   "T": TDES algorithm (double or triple length key)

   "A": AES algorithm (RFU)

3. Mode: indicate what cryptograph operation will be applied with the key

   "D": Decryption

   "E": Encryption

   "G": MAC generation

   "V": MAC verification

   "X": Key derivation (DUKPT)

4. Version (RFU): It should be 00.
5. Export (RFU): It should be "N".

If the key usage is "K0", the length of key must be 16 bytes or 24 bytes (algorithm must be "T").

Key Architecture and limitation

Group	Key ID	Length	Usage	Algorithm	Mode	Encrypt under
PIN	0~9	8~24	P0	D or T	E	KLK
		16~24	K0	T	D	KLK
Data	A	RFU	RFU	RFU	RFU	RFU
MAC	B~E	8	M1	D	G	KLK
		16	M3	T	G / V	KLK
		16~24	K0	T	D	KLK
KLK	F	16~24	K0	T	D	KLK
MSR Data	G	8~24	D0	D or T	E	KLK
		16~24	K0	T	D	KLK
RFU	H~V	RFU	RFU	RFU	RFU	RFU

Key attribute and limitation for IPEK

IPEK	Length	Usage	Algorithm	Mode	Encrypt under
IPEK0 or IPEK1	8 or 16	B1	D or T	X	KLK

1. All the keys injected in cipher-text must be encrypted by key derived from KLK and calculate a

MAC value by key derived from KLK

2. For key with usage "K0", the length must be 16 bytes or 24 bytes.
3. For MAC key with usage "M1", the length of key must be 8 bytes (DES-MAC).
4. For MAC key with usage "M3", the length of key must be 16 bytes (TDES-MAC).
5. Duplicate key injection is not allowed. (except IPEK0 and IPEK1)
6. The length of injected key in cipher-text should be equal to or less then the length of KLK.

Key Injection

To inject clear-text key (Key ID: 0~9, A~G) into PP791, the default attributes will be as following, Key usage = "K0", Algorithm = "T", Mode = "D", Version = "00" and export = "N"

To inject cipher-text key into PP791, user has to assign these attributes.
For Key 0 ~ 9,
Key usage should be "K0" or "P0", algorithm should be "T" or "D", mode should be "D" (If for "K0" usage) or "E" (If for "D0" usage).
For Key B ~ E,
Key usage should be "K0", "M1" or "M3", algorithm should be "T" (If for "K0" or "M3" usage) or "D" (If for "M1" usage), mode should be "D" (If for "K0" usage) or "G" (If for "M1" or "M3" usage).
For Key G,
Key usage should be "K0" or "D0", algorithm should be "T" (If for "K0") or "D".
For Key F,
Key usage should be "K0", algorithm should be "T".
For IPEK 0~1
Key usage could be any 2 bytes data, algorithm should be "D" or "T", mode should be "E".

Inject key in cipher-text (TR31 format)

For Key 0~9, A~G
<SI>02[Key ID][KBH][Encrypted KEY][MAC]<SO>, where [KBH] + [Encrypted KEY] + [MAC] is TR31 block.
For IPEK0
<STX>90[KBH][Optional KBH][DUKPT0][MAC]<ETX>, where [KBH and Optional KBH] + [IPEK0] + [MAC] is TR31 block.
For IPEK1
<STX>94[KBH][Optional KBH][DUKPT1][MAC]<ETX>, where [KBH and Optional KBH] + [IPEK1] + [MAC] is TR31 block.

KBH (Key Block Header – ASCII format):

A[4byte – length of TR31 block][2byte - Usage][1byte - Algorithm] [1byte - Mode][2byte - Version][1byte - Export][2byte - option][2byte - rfu]

Optional KBH (For DUKPT use only):

[2byte: Optional Block ID, fixed as "KS"][2byte: Optional Block Length, fixed as "18"][20byte: Optional Block Data, put key serial number (refer to ANSI X9.24 SMID) in this field]

Encrypted KEY Block:

1. Derive Key1 by XOR KLK with 0x45
2. Generate new key block, [2byte number indicate the key in bits][key][random padding]
3. Encrypt the new key block by Key1 with first 8byte of KBH as IV in CBC mode and get encrypted key block.

MAC:

1. Derive Key2 by XOR KLK with 0x4D
2. Concatenate KBH with Optional KBH (if any) and encrypted key block and get new key block 2.
3. Encrypt the new key block 2 by Key2 without IV in CBC mode and get the last 8 bytes.
4. Get the first 4 bytes of result as MAC value

Example 1:

KLK: 0123456789ABCDEFFEDCBA9876543210

New MK (Key ID = 1, key usage = "K0"): 89E88CF7931444F334BD7547FC3F380C

Generate KBH:

KBH = A | 0072 | K0 | T | D | 00 | N | 0000

Generate Encrypted KEY Block:

1. Derive K1 for encryption: 44660022CCEE88AABB99FFDD33117755
   K2 for MAC value: 4C6E082AC4E680A2B391F7D53B197F5D
2. Key length = 16 bytes (128 bits = 0x80), 6 byte random padding = 720DF563BB07,
   New key block = 008089E88CF7931444F334BD7547FC3F380C720DF563BB07.
3. IV = first 8 byte of KBH ("A0072K0T") = 41303037324B3054, apply TDES-CBC on new key block by K1 with IV and get encrypted key block = D078A2657E5B57972CD3 D308E05E1FE519B316309AA6354A

MAC:

1. Concatenate KBH and encrypted key block = 41303037324B30544430304E303 03030D078A2657E5B57972CD3 D308E05E1FE519B316309AA6354A
2. Apply TDES-CBC on new key block 2 by K2 without IV and get last 8 byte result = 668071B5B73CC024
3. MAC value = 668071B5
4. The final TR31 block = A0072K0TD00N0000 - D078A2657E5B57972CD3D308E05E 1FE519B316309AA6354A - 668071B5

Send message 02 to load this new key in cipher-text:

<SI>021A0072K0TD00N0000D078A2657E5B57972CD3D308E05E1FE519B316309AA6354A668071B5<SO>[LRC]

3. **Derived Unique Key Per Transaction (DUKPT):**

PP791 Implements ANSI X9.24-2002 and ANSI TR31 key management scheme for DUKPT. Authorized personnel can load 8bytes/16bytes Initial keys (also known as IPEK) and Key serial number (also known as 'Security Management Information Data-SMID' in ANSI X9.24). Every time when PP791 finished a PIN entry transaction, a new key will be calculated. Every single transaction will use different key in order to prevent attacker to detect specific keys in any transactions.

The symmetric keys (MKSK/DUKPT) structure is shown as following:

Master Key 0 (PIN entry master keys / PIN keys)
Master Key 1 (PIN entry master keys / PIN keys)
…
Master Key 9 (PIN entry master keys / PIN keys)
...
Master Key B~E (MAC master keys) (MAC master keys / MAC keys)
Master Key F (Key Loading Key)
Master Key G (MSR master key / MSR data key)
Master Key H (RFU)
Master Key I (RFU)
…
Master Key V

DUKPT Set 0
DUKPT Set 1

4. **RSA public key:**

PP791 supports RSA encryption when processing EMV level 2 offline transactions with smart cards.

5. **Second DUKPT Key Set of PP791:**

PP791 provides 2nd key set of DUKPT operation for customer's scalability. Message 90 is used to initialize first key set, with message 94 to initialize second key set. User must issue message 96 to select preferred key set before doing DUKPT transactions. These two key set are independent with each other, and both accepts double length key for TDES capability. Ether key set reaches 1million transaction limit will lock down PP791.

In real operation, authorized user can load a 8byte DES initial key to key set 1 and a 16byte TDES initial key to key set 2 before PIN pad is deployed. At first use can transact with key set 1. When backbone system ready, user can use message 96 to select key set 2 to switch to TDES transaction immediately.

6. **Triple DES (TDES) capability:**

TDES means that DES algorithm is applied three times on the data to be encrypted before it is sent over the line. PP791 can detect key length when loading keys (message 02 for Master/Session key and message 90/94 for DUKPT) and doing transactions (Master/Session key message 70, Z60, Z62). If a 32 or 48 characters (16 or 24 byte) key is used, PP791 will treat all transactions using this key as TDES enabled, else PP791 use DES operation.

TDES algorithm needs a 16-byte key, which separated as L-key (leftmost 8 bytes) and R-key (rightmost 8 bytes). PP791 defaults EDE order for TDES encrypting operation as follows:

Clear Text	→	DES encryption via L-key	→	DES decryption via R-key	→	DES encryption via L-key	→	Ciphered Text

EDE order of TDES operation – 16 byte key. (Data decrypting process is the reverse of encrypting process.)

Clear Text	→	DES encryption via L-key	→	DES decryption via Middle-key	→	DES encryption via R-key	→	Ciphered Text

EDE order of TDES operation – 24 byte key. (Data decrypting process is the reverse of encrypting process.)

7. TDES – ECB Encryption:

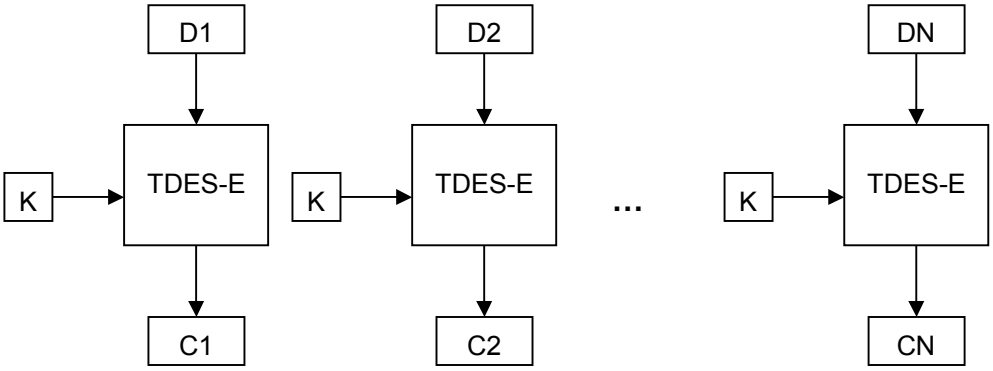

8. **TDES – CBC Encryption:**

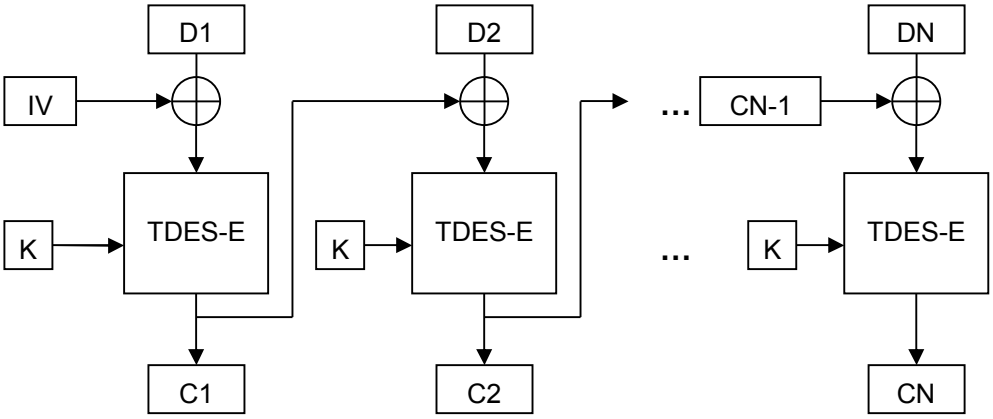

9. **DES-MAC (ISO 9797-1 method 1)**

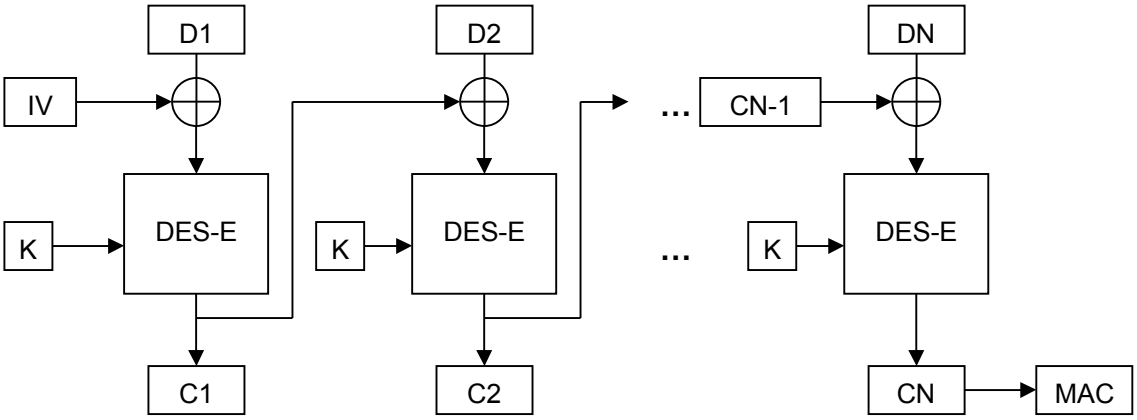

10. **TDES – MAC (ISO 9797-1 method 3)**

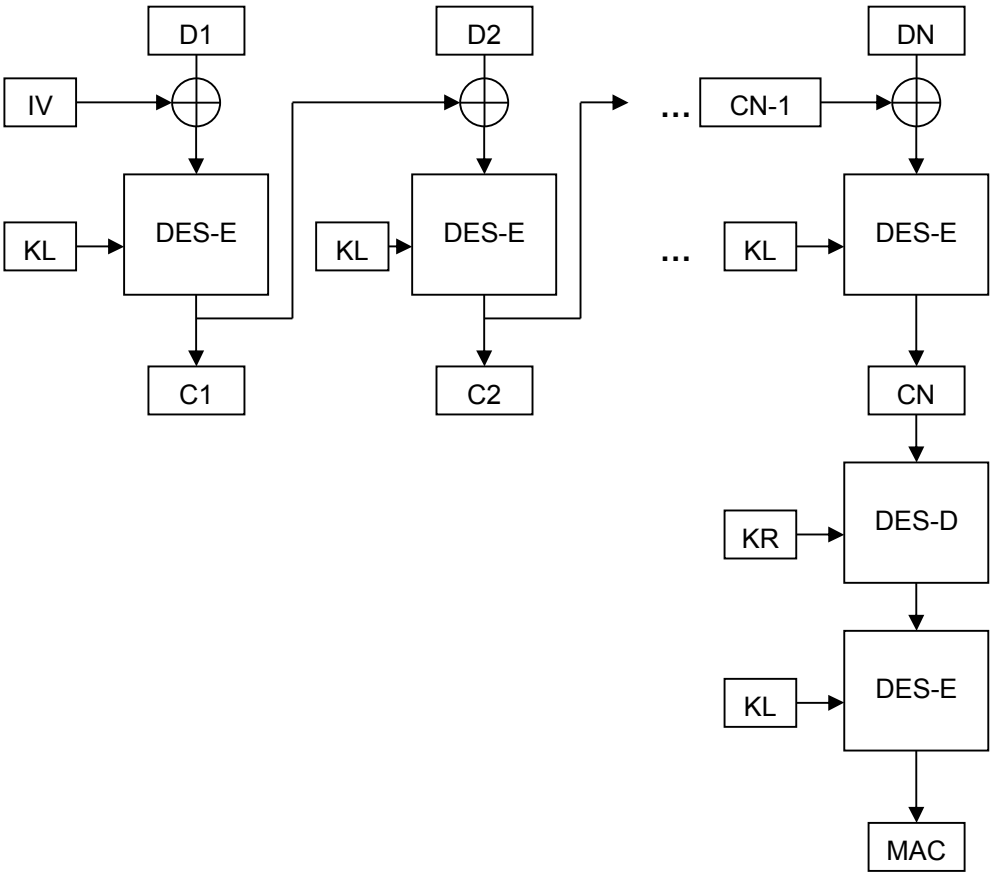

Appendix B PIN Block Format

ANSI x9.8 format (MK/SK, DUKPT, and Offline clear text PIN entry)

PP791 outputs ANSI X9.8 PIN blocks. Its format as follows:

PIN Block Format

Bit	0-3	4-7	8-11	12-15	16-19	20-23	24-27	28-31	32-35	36-39	40-43	44-47	48-51	52-55	56-59	60-63
Value	C	N	P	P	P	P	P/F	P/F	P/F	P/F	P/F	P/F	P/F	P/F	F	F

Bit field explanation:

C - Control field (Format number). Value = 0000 (Does not support Format 1 or Format 3)

N - PIN length entered field. Value = 0100 to 1100 (4-12) (0x4 – 0xC)

P - PIN digit. Value = 0000 to 1001 (0-9)

F - Fill digit. Value = 1111 (F)

P/F - Pin digit or fill digit, as determined by PIN Length N. PIN Length is 4 to 12

Primary Account Number Block (PANB) Format

Bit	0-3	4-7	8-11	12-15	16-19	20-23	24-27	28-31	32-35	36-39	40-43	44-47	48-51	52-55	56-59	60-63
Value	0	0	0	0	A1	A2	A3	A4	A5	A6	A7	A8	A9	A10	A11	A12

Bit field explanation:

A - The twelve rightmost digits of the primary account number (PAN), excluding the check digit. A1 is the most significant digit and A12 is the digit immediately preceding the PAN's check digit. If the primary account number excluding the check digit is less than twelve digits, the digits are right justified and padded on the left with zeroes. Permissible values are 0000 to 1001.

0 - Pad digit = 0000. The first four digits of the account number block are always padded with this value.

Formatted Clear-Text PIN Block

The PIN and account number blocks are Exclusive ORed before being assembled in the DES (Data Encryption Standard) input register. When the account number is not available, only the PIN block is assembled in the DES input register. PP791 will output DES/TDES encrypted PIN block with message 71 and delete clear-text PIN block immediately after transaction completed.

Example:

Account Number: 1234567890-6 (6 is check number and will be ignored)

PIN: 8780

The PIN block = `04 87 80 FF FF FF FF FF`

The PANB = `00 00 12 34 56 78 90 00`

Formatted PIN block = `04 87 92 CB A9 87 6F FF (Data to be encrypted)`

EMV Level 2 format (Offline enciphered PIN entry)

When using offline enciphered PIN entry (message T36), PP791 generates EMV level 2 specified PIN block as follows:

Header	Type 2 PIN block	ICC Unpredictable Number	Random Padding
0x7F	**ANSI X9.8 clear text PIN block with C=2**	**8 bytes random number sent out by smart card**	**Random number generated by PP791 to pad the whole block to the length of RSA key modulus**

For example, in one transaction, smart card sends "FA64B77CFC7065DD" as challenge and a 1024bits (128bytes) public key, if a user inputs "1234" as PIN, the EMV Lv2 PIN block will be:

H	PINB	ICC RANDOM	PADDING
7F	241234FFFFFFFFFF	FA64B77CFC7065DD	.....(128-17 = 111bytes)

After this block generated, it will be RSA encrypted by public key and send out.

Appendix C Features and specification

Micro controller: i.MX258 micro processor (running at 400MHz).

Memory: 64MB DDR2 RAM, 4GB Flash

Display: 320*240 pixels LCD display.

Key Pad: 16 keys keypad, the digit keys are randomly scanned.

PIN encryption:
1. Follows ANSI X9.8 for PIN block and National Bureau of Standard DES / Triple DES algorithm in Electronic Code Book mode.
2. EMV level 2 specified PIN block with RSA encryption (maximum 1984bits mod)

Key management:
1. Master/ Session key (MK/SK).
2. Unique Key Per Transaction conforms to ANSI X9.24-1992 and 2002.
(MK/SK and DUKPT is mutual exclusive, different message format needed.)
3. RSA public key injection with DES/TDES authentication.

Message Frame: Compatible to VISA specifications.

Interface: [USB] mini-DIN 9-pin Connector (to Standard A-Type plug.)
[RS232] mini-DIN 9-pin Connector (to DB9 RS232 connector.)
Preset to: 9600 BPS, 8 bits per character, none parity, one stop bit.

Pin assignment	DB9	mini-DIN
TXD, from PIN pad	3	4
RXD, to PIN pad	2	6
GND	5	1
RTS	7	2
CTS	8	5
+5VDC(needs Ext. DC adapter)	N/A	9 and 8

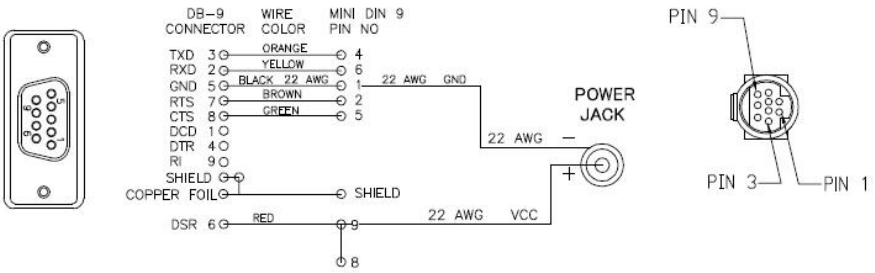

Power: Regulated +5VDC input, 400mA (typical); 500mA (max.).

Battery Life: 4 years for Security Data backup.

Diagnostic: Self-diagnostic includes MCU, Program checksum and Key checksum test.

Dimension: 169mm (L) x 85mm (W) x 43mm (H)

MSR Option: ISO7811, 3 tracks.

Smart card reader: ISO7816-1, 2, 3 and EMV 4.3 Level 1 & Level 2 certified.
Reads T=0, T=1 cards. Have one primary and three SAM card interface.

Appendix D Tag Definition on EMV data

There are some data needed in EMV transaction but not given tag definition by EMV. Here PP791 defines tags on the following data that will used in EMV transaction.

Terminal Configuration Data:

Name	Description	Format	Tag	Length
Terminal UI Capability	0:Make PIN pad selects the highest priority application and ask user's confirmation. 1:Make PIN pad ask the confirmation from user for EMV application with highest priority in candidate list. 2:Make PIN pad provides a list of candidate applications.	b	50000002	1
MSR Processing Batch Tag List	PIN pad will store transaction data according to the tag list while the transaction is performed as MSR processing. Ex, for tag list (829F365F3 09F399F029F03), PIN pad will store transaction data of tag number 0x82, 0x9F36, 0x5F30, 0x9F39, 0x9F02 and 0x9F03.	b	50000003	var
Online PIN Block Tag Define	User can define new tag number for online PIN block.	b	50000004	1~4
Online PIN Key Tag Define	User can define new tag number for online PIN key.	b	50000005	1~4

EMV Application Configuration Data:

Name	Description	Format	Tag	Length
Application Selection Indicator	0: Full AID matching. 1: Partial AID matching	n	40000001	1
Threshold Value for Biased Random Selection	Format is same as "Amount Authorized (Numeric)" defined by EMV. It must be zero	n	40000004	6

	or a positive number less than the floor limit (Refer to EMV.).			
Target Percentage to be used for Biased Random Selection	0x00 ~ 0x63	b	40000005	1
Maximum Target Percentage to be used for Biased Random Selection	0x00 ~ 0x63	b	40000006	1
Terminal Action Code - Default	Refer to EMV 4.3 BOOK 3, section 10.7	b	40000007	5
Terminal Action Code - Denial	Refer to EMV 4.3 BOOK 3, section 10.7	b	40000008	5
Terminal Action Code - Online	Refer to EMV 4.3 BOOK 3, section 10.7	b	40000009	5
Data tags required in Online message (ARQC)	See below	b	4000000A	var.
Data tags required in reversal message	See below	b	4000000D	var.
Data tags for batch data capture	See below	b	40000010	var.
ARC Approve	See below	b	4000001A	var.
ARC Decline	See below	b	4000001B	var.
ARC Referral	See below	b	4000001C	var.

Note. The contents in data object with tag value 0x4000000A ~ 0x40000010 are a list of tags with asterisks as separators. Ex. The contents 95*9F02*82* in data object with tag value (0x4000000A) means that there are three data objects, Terminal Verification Results (0x95), Amount Authorized (0x9F02) and Application Interchange Profile (0x82) will be necessary for online transaction.

Note. The data objects with tag value 0x4000000A ~ 0x40000010 are used for customer-defined application on PIN pad. If customer installed these information into PIN pad previously, customer-defined application could apply APIs provided by PIN pad to implement an EMV transaction and without modification on application if the data required for online message is changed.

Note. ARC Approve / Decline / Referral is used for customer to define their definition of ARC code. Customer can concatenate a list of ARC value for definition of Approve, Decline or Referral. Ex. If ARC Approve is 0x303031313536, PIN pad will treat ARC with value 0x3030, 0x3131 and 0x3536 as that Host approves this transaction online.

Transaction Result Data:

Name	Description	Format	Tag	Length

Issuer Script Result	The result of terminal script processing.	b	9F5B	var
Enciphered PIN block	Transaction PIN enciphered at the PIN pad for online verification.	b	9F72	8

These data object are defined in EMV 4.3 BOOK3, Annex A without tag values. The tag values are defined by PIN pad.

Appendix E Minimum Set of EMV Configuration Data

For a complete transaction, user has to load minimum set of terminal configuration data and EMV application data into PIN pad.

Minimum set of Terminal configuration Data.

Mandatory:

Merchant Category (9F15), Merchant ID (9F16), Terminal Country Code (9F1A), Terminal ID (9F1C), IFD Serial NO. (9F1E), Terminal Capabilities (9F33), Terminal Type (9F35), Additional Terminal Capabilities (9F40), User Application Confirmation (50000002), MSR Batch data tag list (50000003), Online PIN block tag define (50000004), Online PIN key tag define (50000005)

Optional:

Merchant Name and Location (9F4E), Terminal Risk Management Data (9F1D)

Note. User Application Confirmation is used to enable / disable PIN pad to build a AID list for cardholder to select EMV application.

Minimum set of EMV application configuration Data.

Application Selection Indicator (40000001), Threshold Value for Biased Random Selection (40000004), Target Percentage for Random Selection (40000005), Maximum Target Percentage for Biased Random Selection (40000006), ARQC Tag list (4000000A), Reversal Tag list (4000000D), Batch Tag list (40000010), Default TDOL (97), Acquirer Identifier (9F01), Application Identifier (9F06), Application Version Number (9F09), Default Dynamic Data Authentication Data Object List (9F49), Terminal Floor Limit (9F1B),

Optional:

Terminal Action Code (Default) (40000007), Terminal Action Code (Denial) (40000008), Terminal Action Code (Online) (40000009)

Appendix F PCD Tag Definition on EMV data

There are some data needed when do the EMV transaction but do not given tag definition by EMV Contactless specifications v2.4. PIN pad defines its unique tags on the following data.

Table C-1 describes the self-define tag for PCD EMV Level2
Table C-2 describes the self-define tag for qVSDC and payWave.
Table C-3 describes the self-define tag for PayPass.
Table C-4 describes the self-define tag for expresspay.

EMV Application Configuration Data:

Table C-1: The self-define tag for PCD EMV Level2

Name	Description	Format	Tag	Length
Application Selection Identifier	0: Full AID matching. 1: Partial AID matching	n	40000001	1
Kernel ID	020000: PayPass 030000: qVSDC and payWave 040000: expresspay	b	40000020	3
Status Check	0 : Disable Status Check. 1 : Enable Status Check. Please refer to EMV Contactless Specifications v2.4 BOOK B, section 3.1	b	40000022	1
Zero Amount Allowed	0: not allowed(option 2) 1: allowed(option 1) 2: disable Please refer to EMV Contactless Specifications v2.4 BOOK B, section 3.1	b	40000023	1
Contactless Floor Limit	Please refer to EMV Contactless Specifications v2.4 BOOK B, section 3.1	n	40000024	6
Contactless Transaction Limit	Please refer to EMV Contactless Specifications v2.4 BOOK B, section 3.1	n	40000025	6
CVM Required Limit	Please refer to EMV Contactless Specifications v2.4 BOOK B, section 3.1	n	40000026	6

Table C-2: The self-define tag for qVSDC and payWave

Name	Description	Format	Tag	Length
CVN 17 switch	0 : Disable CVN 17	b	40000030	1

	1 : Enable CVN 17			
PIN pad Configuration Parameters	This tag used to set up qVSDC and payWave configuration. Byte 1 bit 8-3: RFU bit 2: Exception file check enabled(1b)/disabled(0b) bit 1: RFU Byte 2: RFU	b	40000033	2
Track 1&2 configure	Bit 3: 0: Disable Track 2, 1: Enable Track 2 Bit 2: 0: Disable Track 1, 1: Enable Track 1 Bit 1: 0: Output Tag 57, 1: format track 2	b	40000035	1

Table C-3: The self-define tag for PayPass

Name	Description	Format	Tag	Length
None	None	None	None	None

Table C-4: The self-define tag for expresspay

Name	Description	Format	Tag	Length
Terminal Action Code - Default	Please refer to EP3.0 section 12, [EMV4.2 iii] section 10.7 and [EMV4.2 iv] section 6.3.6.	b	DF808003	5
Terminal Action Code - Denial	Please refer to EP3.0 section 12, [EMV4.2 iii] section 10.7 and [EMV4.2 iv] section 6.3.6.	b	DF808004	5
Terminal Action Code - Online	Please refer to EP3.0 section 12, [EMV4.2 iii] section 10.7 and [EMV4.2 iv] section 6.3.6.	b	DF808005	5
PIN pad Configuration Parameters	This tag used to set up AE configuration. Byte 1 bit 8: Status Check enabled(1b)/disabled(0b). bit7: Amount Authorized of Zero Check enabled(1b)/disabled(0b) bit 6: Amount Authorized of Zero Option option 1(1b)/Option 2(0b), this bit is applicable when the PIN pad is online capable. bit 5: PIN pad Contactless Transaction Limit Check enabled(1b)/disabled(0b) bit 4: PIN pad CVM Required Limit Check enabled(1b)/disabled(0b) bit 3: PIN pad Contactless Floor Limit Check enabled(1b)/disabled(0b)	b	DF808006	2

	bit 2: Exception file check enabled(1b)/disabled(0b) bit 1: Revocation list check enabled(1b)/disabled(0b) Byte 2: RFU			
Magstripe Unpredictable Number Range	PIN pad use the random number of month (RNM) for the unpredictable number with '0000YYMM' format. The formula is RNM: = UN_{EMV} mod (UNR + 1)	n	DF808008	2
Track 1&2 configure	Bit 3: 0: Disable Track 2, 1: Enable Track 2 Bit 2: 0: Disable Track 1, 1: Enable Track 1 Bit 1: 0: Output Tag 57, 1: format track 2	b	DF808071	1

Appendix G PCD Minimum Set of EMV Configuration Data

To do an EMV transaction, user has to setup minimum set of terminal configuration data and EMV application data into PIN pad.

Minimum set of Terminal configuration Data.

Mandatory:

Terminal Country Code (9F1A).

Optional:

Merchant Category (9F15), Merchant ID (9F16), Merchant Name and Location (9F4E), Terminal ID (9F1C), IFD Serial NO. (9F1E), Terminal type (9F35).

Minimum set of EMV application configuration Data.

PCD EMV Level2:

Application Identifier(9F06),
Transaction Type(9C)
Application Selection Identifier(40000001),
Kernel ID(40000020),
Contactless Floor Limit(40000024),
Contactless Transaction Limit (40000025),
CVM Required Limit (40000026)

For qVSDC and payWave:

Terminal Transaction Qualifiers(9F66),
POS Entry Mode(9F39),
Terminal Floor Limit (9F1B),
Terminal Verification Result(95),
qVSDC and payWave CVN 17 switch(40000030),
PIN pad Configuration Parameters(40000033),
Track 1&2 configure(40000035).
Terminal Entry Capability(DF8170),

For PayPass:

None.

For expresspay:

expresspay Terminal Capabilities(9F6D),
Terminal Transaction Capabilities(9F6E),

Application Version Number(9F09),

Terminal Floor Limit(9F1B),

Terminal Capabilities (9F33),

Terminal Type(9F35)

Terminal Action Code – Default(DF808003),

Terminal Action Code – Denial(DF808004),

Terminal Action Code – Online(DF808005),

PIN pad Configuration Parameters(DF808006),

expresspay Magstripe Unpredictable Number Range(DF808008),

Set Track 1&2 configure(DF808071).

Appendix H Fixed Prompts for Z2/Z3 authenticated mode

Prompt ID	Display
001	ENTER VALUE
002	ENTER PHONE
003	ENTER CUST ID
004	ENTER AMOUNT
005	PLEASE ENTER
006	ENTER CARD ID
007	ENTER POINTS
008	ENTER ACCOUNT
009	ENTER LOYALTY
010	ENTER ZIP CODE
011	ENTER VEHICLE
012	ENTER EMPLOYEE
013	ENTER ID NUMBER
014	ENTER DRIVER ID
015	ENTER CASH BACK
016	DRIVER LICENSE
017	PLEASE RE-ENTER
018	REENTER DRIVER ID
019	ENTER DRIVER LICENSE
020	ENTER BIRTH DATE
021	REENTER ZIP CODE
022	ENTER MEMBERSHIP
100	ACCOUNT NUMBER
101	AIRCRAFT TAIL NO
102	BADGE NUMBER
103	CARD NUMBER
104	CARD SEC CODE
105	CASH BACK AMOUNT
106	CID CODE
107	CVC CODE
108	CVN CODE
109	CVV CODE
110	CUSTOMER CODE
111	CUSTOMER DATA

Prompt ID	Display
112	CUSTOMER ID
113	CUSTOMER NUMBER
114	CUSTOMER REF
115	CUSTOMER REF NO.
116	DATE OF BIRTH
117	DEPARTMENT NO.
118	DRIVER ID
119	DRIVER LICENSE
120	DRIVER NUMBER
121	EMPLOYEE ID
122	EMPLOYEE NUMBER
123	ENTER
124	ENTER ACCOUNT #
125	ENTER AIR TAIL #
126	ENTER BADGE #
127	ENTER BIRTH DATE
128	ENTER CARD #
129	ENTER CASH BACK
130	ENTER CUST #
131	ENTER CUST CODE
132	ENTER CUST DATA
133	ENTER CUST ID
134	ENTER CUST REF
135	ENTER CUST REF #
136	ENTER CID CODE
137	ENTER CVC CODE
138	ENTER CVN CODE
139	ENTER CVV CODE
140	ENTER DEPT #
141	ENTER DOB
142	ENTER DRIVER #
143	ENTER DRIVER ID
144	ENTER DRIVER LIC
145	ENTER EMP ID

Prompt ID	Display
146	ENTER EMPLOYEE #
147	ENTER EXP DATE
148	ENTER FLEET #
149	ENTER FLEET DATA
150	ENTER HOME PHONE
151	ENTER ID #
152	ENTER JOB #
153	ENTER ODOMETER
154	ENTER PHONE #
155	ENTER PO #
156	ENTER REF #
157	ENTER ROUTE #
158	ENTER SEC CODE
159	ENTER SERIAL #
160	ENTER SOC SEC #
161	ENTER SSN
162	ENTER STREET #
163	ENTER TRAILER #
164	ENTER USER ID
165	ENTER V-CODE
166	ENTER VEH CARD #
167	ENTER VEHICLE #
168	ENTER VEHICLE ID
169	ENTER WORK PHONE
170	ENTER ZIP CODE
171	EXPIRATION DATE
172	FLEET DATA
173	FLEET NUMBER
174	HOME PHONE NO.
175	ID NUMBER
176	JOB NUMBER
177	MMDDYY
178	MMDDYYYY
179	MMYY
180	ODOMETER READING
181	OR PHONE #
182	OR PHONE NUMBER

Prompt ID	Display
183	PHONE NUMBER
184	PLEASE
185	PLEASE ENTER
186	PLEASE RE-ENTER
187	PO NUMBER
188	RE-ENTER
189	REFERENCE NUMBER
190	RESTRICTION CODE
191	ROUTE NUMBER
192	SECURITY CODE
193	SERIAL NUMBER
194	SOCIAL SEC NO.
195	STREET NUMBER
196	SWIPE CARD
197	SWIPE CARD OR
198	TRAILER NUMBER
199	USER ID
200	V-CODE
201	VEHICLE CARD NO.
202	VEHICLE ID
203	VEHICLE NUMBER
204	WORK PHONE NO.
205	ZIP CODE

Appendix I Fixed Prompts for Z2/Z3 PIN entry mode

Prompt ID	Display
001	ENTER PIN
002	ENTER YOUR PIN
003	PLEASE ENTER PIN
004	THEN PUSH ENTER
005	THANK YOU