Content

DOCUMENT	PAGE
Content	1
Technical description	2-3
Dimension drawing	4-5
Rating label drawing	6
Circuit Diagram	7
PCB layout	8
Product Photo	9
Bill of materials	10

INFORMATION DOCUMENT FOR TYPE-APPROVAL OF AN ELECTRIC/ELECTRONIC SUB-ASSEMBLY WITH RESPECT TO ELECTROMAGNETIC COMPATIBILITY ACCORDING ANNEX 2B OF ECE-R10

1	Make (trade name of the manufacturer)	:	Coligen
2	Type and general commercial description(s)	:	**TXL88R07**
	- commercial description(s)	:	Parking sensor
	- version(s)	:	Version 1: TXL88R07-RF001DTX (915MHZ)
3	Name and address of the manufacturer	:	Coligen Corp. No. 1 bldg. ,Guantang Ind. Park, Jingding Zhuhai, Guangdong Province, P.R. China
4	In the case of components and separate technical units, location and method of affixing of the approval mark	:	label affixed to the housing
5	Address(es) of assembly plant(s)	:	Coligen Corp. No. 1 bldg. ,Guantang Ind. Park, Jingding Zhuhai, Guangdong Province, P.R. China
6	This ESA shall be approved as a	:	component
7	Any restrictions of use and conditions for fitting	:	no restrictions

Additional information

Electrical system rated voltage	:	DC5V, negative ground
This ESA can be used on any vehicle type with the following restrictions	:	no restrictions
Installation conditions	:	connected to battery and/or reversing lamp circuit
This ESA can be used on the following vehicle types	:	not applicable
Installation conditions	:	---
The specific test method(s) used and the frequency ranges covered to determine immunity were	:	not applicable
frequency range	:	---
Remark	:	rating current: 50mA

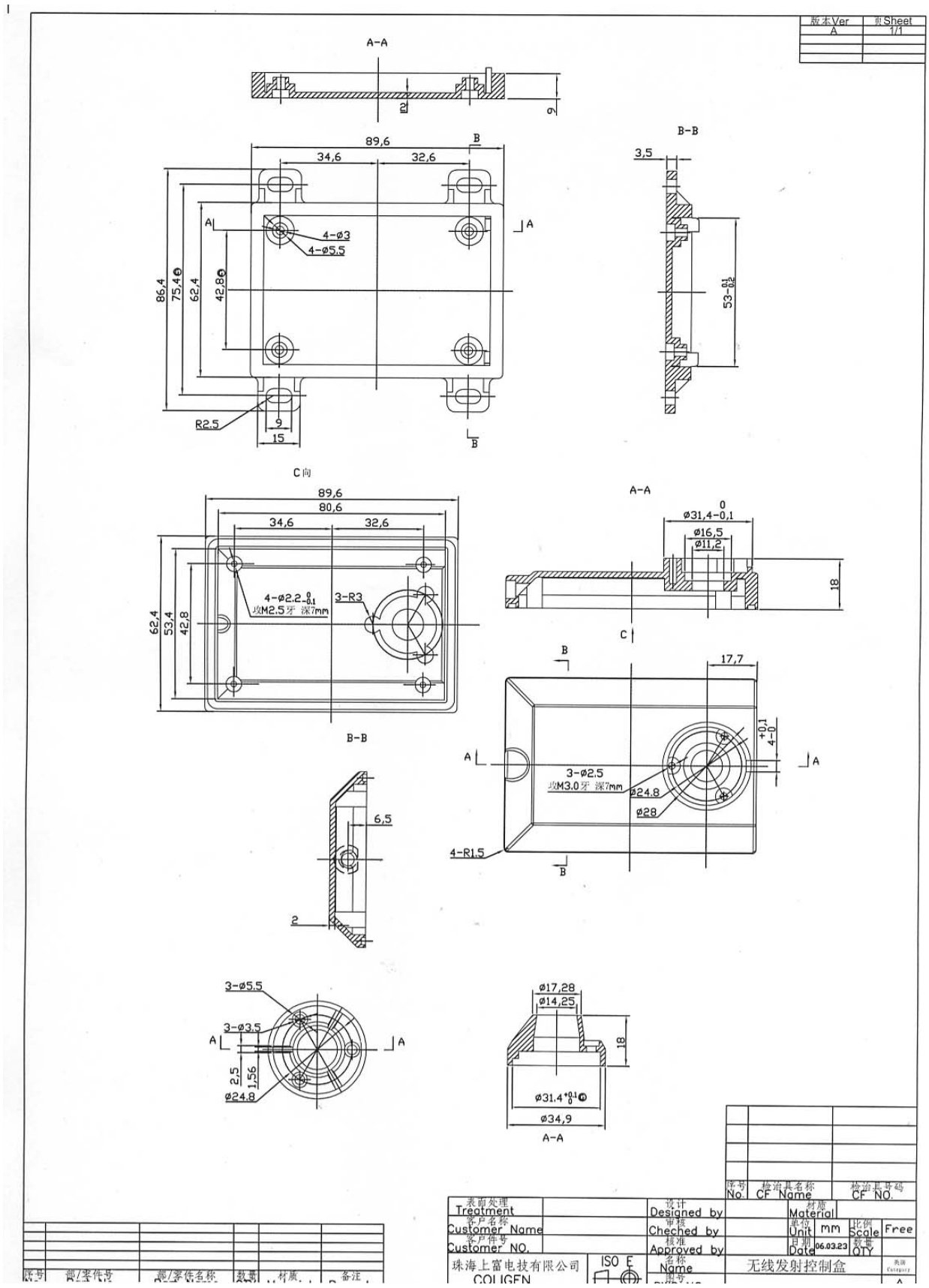

DRW.	RF001DTX-01	Dimension drawing

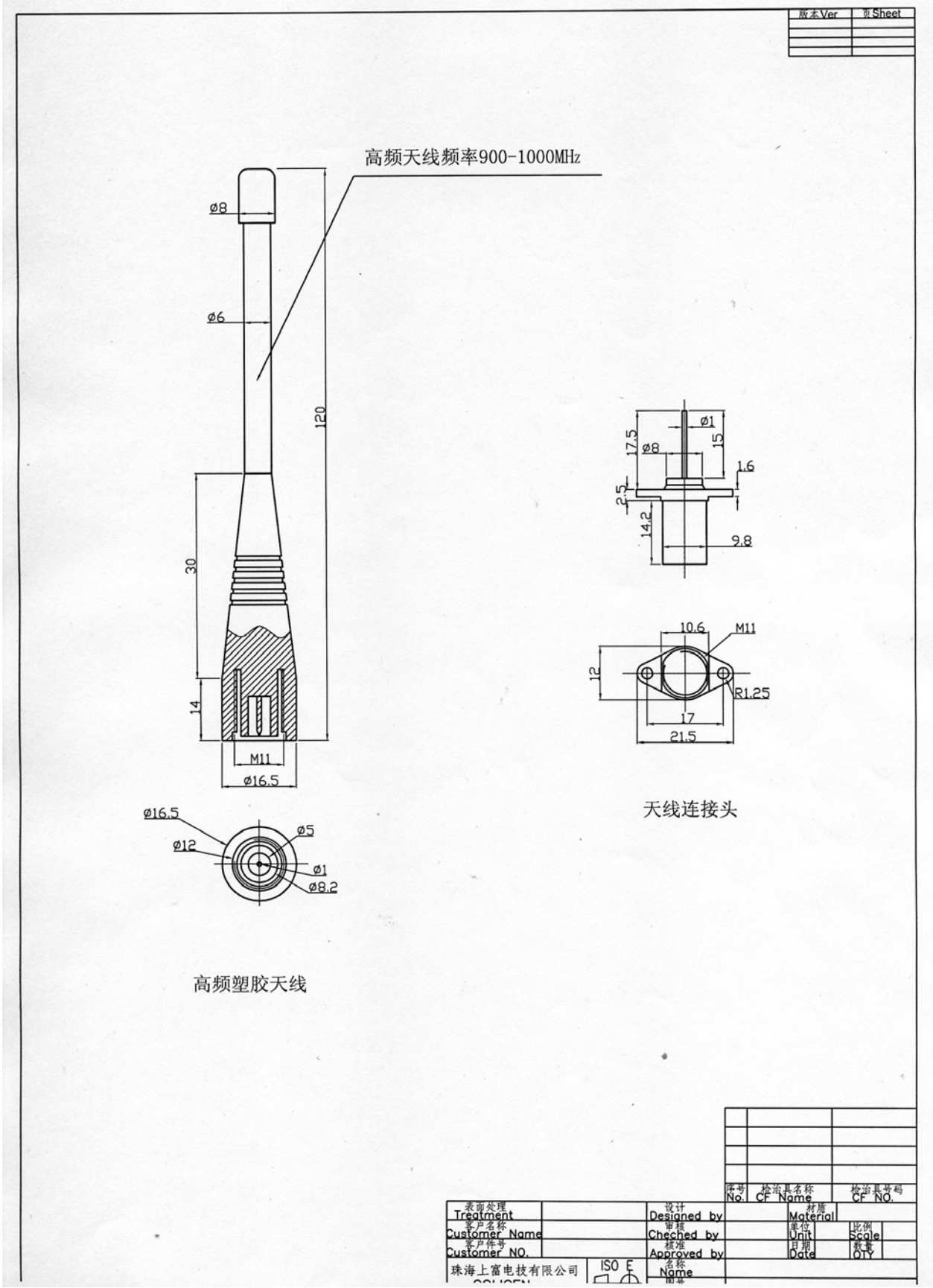

DRW.	RF001DTX-02	Dimension Drawing

The FCC Label for RF001DTX

This device complies with part 15 of the FCC Rules.
Operation is subject to the following two conditions:
(1) This device may not cause harmful interference, and
(2) this device must accept any interference received,
including interference that may cause undesired operation.

FCC ID: TFKRF001DTX

For RF001DTX

DRW.	**RF001DTX-03**	Rating label drawing

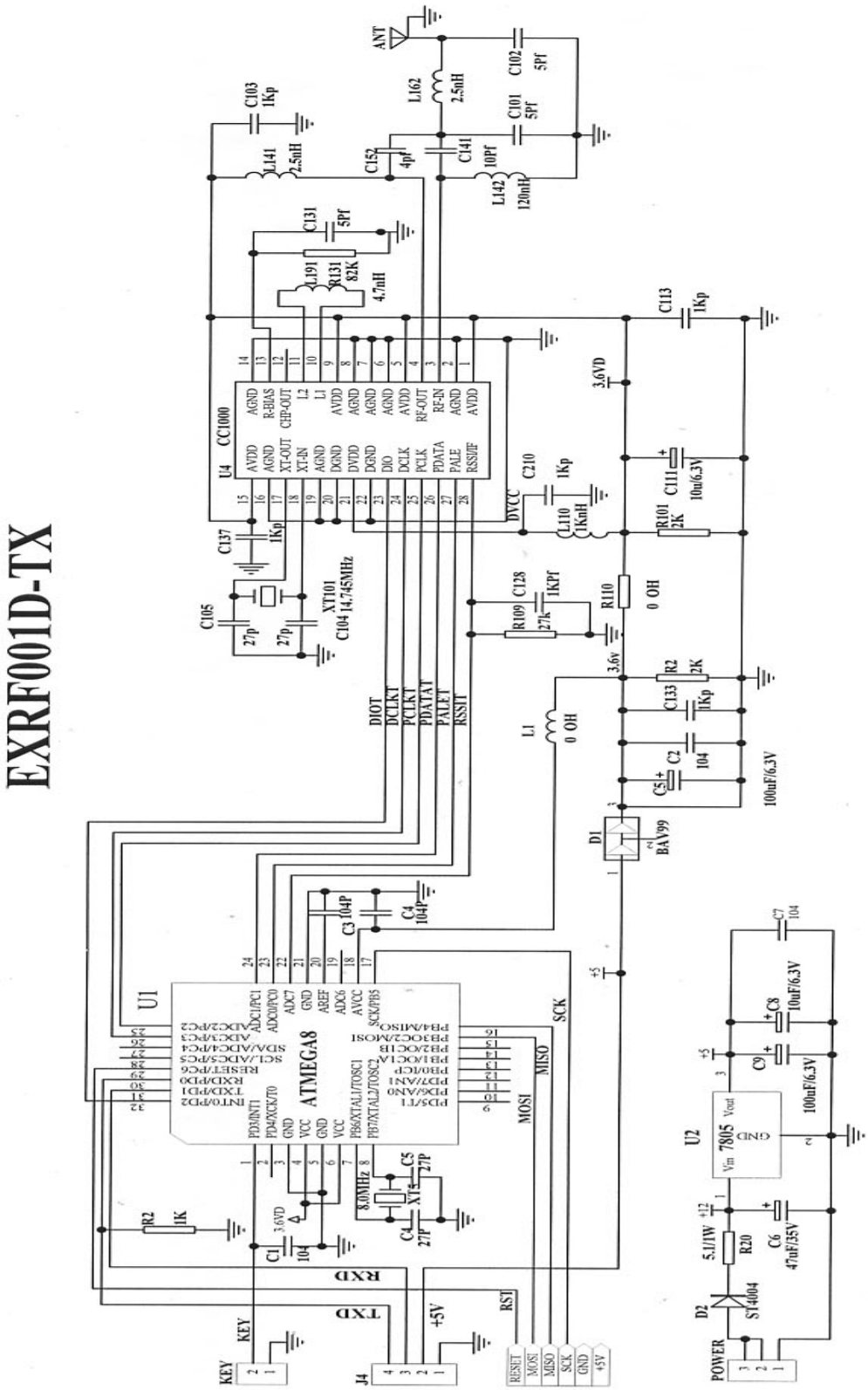

DRW.	RF001DTX-04	Circuit Diagram

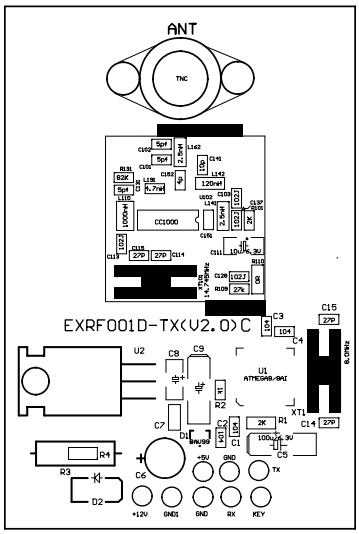
ANT
TNC
EXRF001D-TX(V2.0)C
U1
ATMEGA8/8AI
U2
C8
C9
C7
C6
C5
C14
C15
R1
R2
R3
R4
D1
D2
XT1
+5V
GND
TX
+12V
GND1
GND
RX
KEY

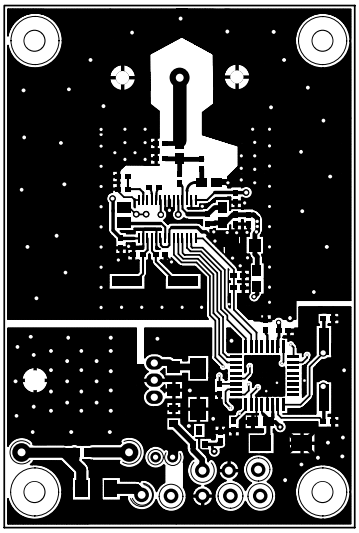

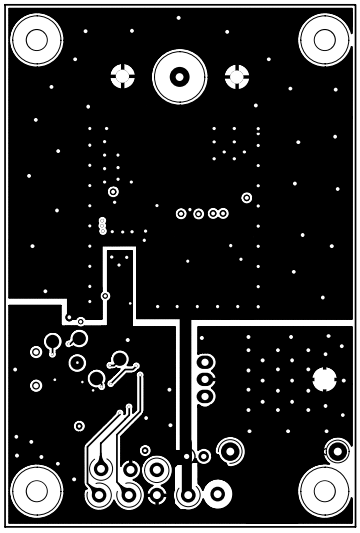

PCB Layout

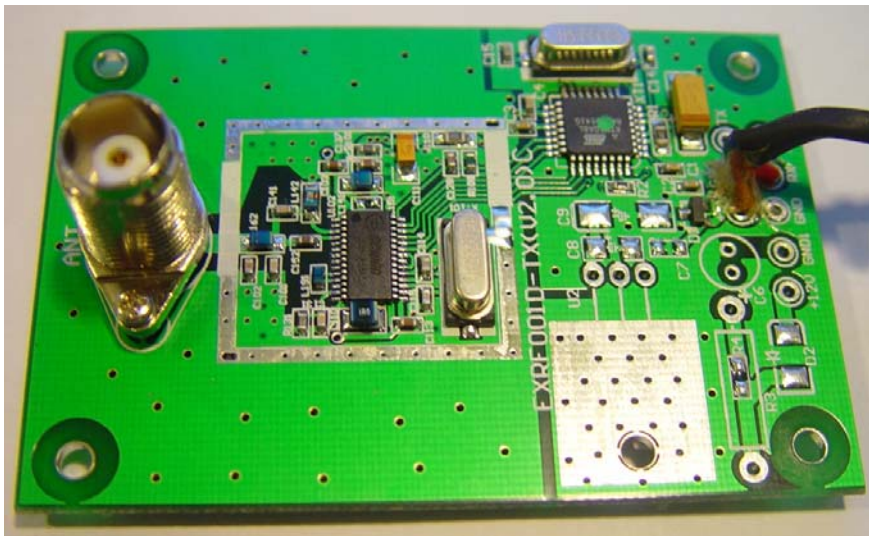

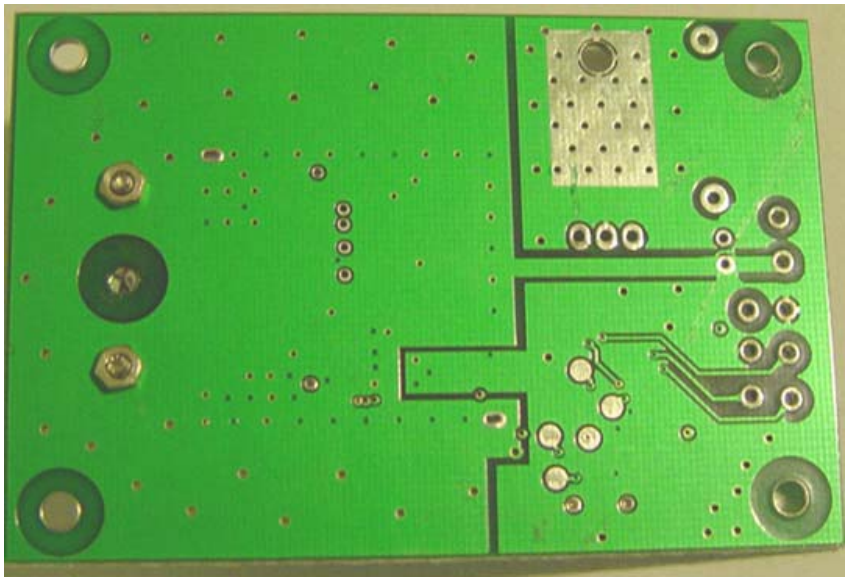

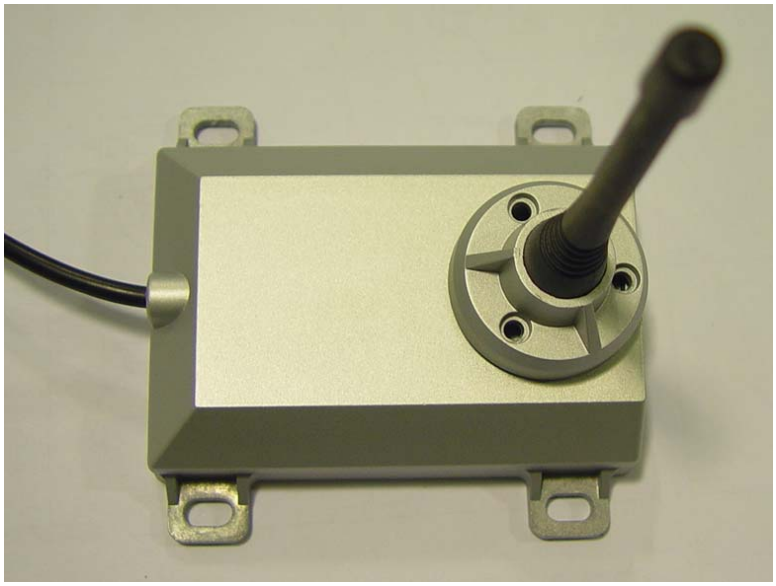

Product Photo

Bill of materials

P/NO.	DESCRIPTION	QTY.	Remark
CC1000	Integrated circuit	1	U102
ATMEGA8L-8AI	Integrated circuit	1	U1
14.745MHZ	Crystal	1	XT101
8.000MHZ	Crystal	1	XT1
EXRF001D-TX	PCB	1	
10UF/6.3V	Tery Capacitor	1	C111
100UF/6.3V	Tery Capacitor	1	C5
BAV99	Double Diode	1	D1
27P	Ceramic Capacitor	4	C14,C15,C114,C115
102P	Ceramic Capacitor	5	C103,C113, C128,C132, C210
104J	Ceramic Capacitor	4	C1,C2,C3,C4
10P	Ceramic Capacitor	1	C141
5P	Ceramic Capacitor	3	C101,C102,C131
4P	Ceramic Capacitor	1	C152
0Ω	Resistor	1	R110
1K	Resistor	1	R2
2K	Resistor	2	R101,R1
27K	Resistor	1	R109
82K	Resistor	1	R131
120N	Inductor	1	L142
4.7N	Inductor	1	L191
1000N	Inductor	1	L210
2.5N	Inductor	2	L162,L141
PM2*8	PM2*8	2	
M2	M2	2	
DPCL-0015-4811	Power wire	1	+5,GND,RX
98-3 **gumwater**	Omnipotent gumwater	1	ANT
502 **gumwater**	gumwater	1	ANT
Dedicated ANT	RF ANT	1	ANT