Content

DOCUMENT	PAGE
Content	1
Technical description	2-3
Dimension drawing	4-6
Rating label drawing	7
Circuit Diagram	8
PCB layout	9
Bill of materials	10-11
Product Photo	12-13

INFORMATION DOCUMENT FOR TYPE-APPROVAL OF AN ELECTRIC/ELECTRONIC SUB-ASSEMBLY WITH RESPECT TO ELECTROMAGNETIC COMPATIBILITY ACCORDING ANNEX 2B OF ECE-R10

1	Make (trade name of the manufacturer)	:	Coligen
2	Type and general commercial description(s)	:	T**XL88R07**
	- commercial description(s)	:	Parking sensor
	- version(s)	:	Version 1: TXL88R07 –RFDP8807 (915MHZ)
3	Name and address of the manufacturer	:	Coligen Corp. No. 1 bldg. ,Guantang Ind. Park, Jingding Zhuhai, Guangdong Province, P.R. China
4	In the case of components and separate technical units, location and method of affixing of the approval mark	:	label affixed to the housing
5	Address(es) of assembly plant(s)	:	Coligen Corp. No. 1 bldg. ,Guantang Ind. Park, Jingding Zhuhai, Guangdong Province, P.R. China
6	This ESA shall be approved as a	:	component
7	Any restrictions of use and conditions for fitting	:	no restrictions

Additional information

Electrical system rated voltage	:	DC12V, negative ground
This ESA can be used on any vehicle type with the following restrictions	:	no restrictions
Installation conditions	:	connected to battery and/or reversing lamp circuit
This ESA can be used on the following vehicle types	:	not applicable
Installation conditions	:	---
The specific test method(s) used and the frequency ranges covered to determine immunity were	:	not applicable
frequency range	:	---
Remark	:	rating current: 150mA

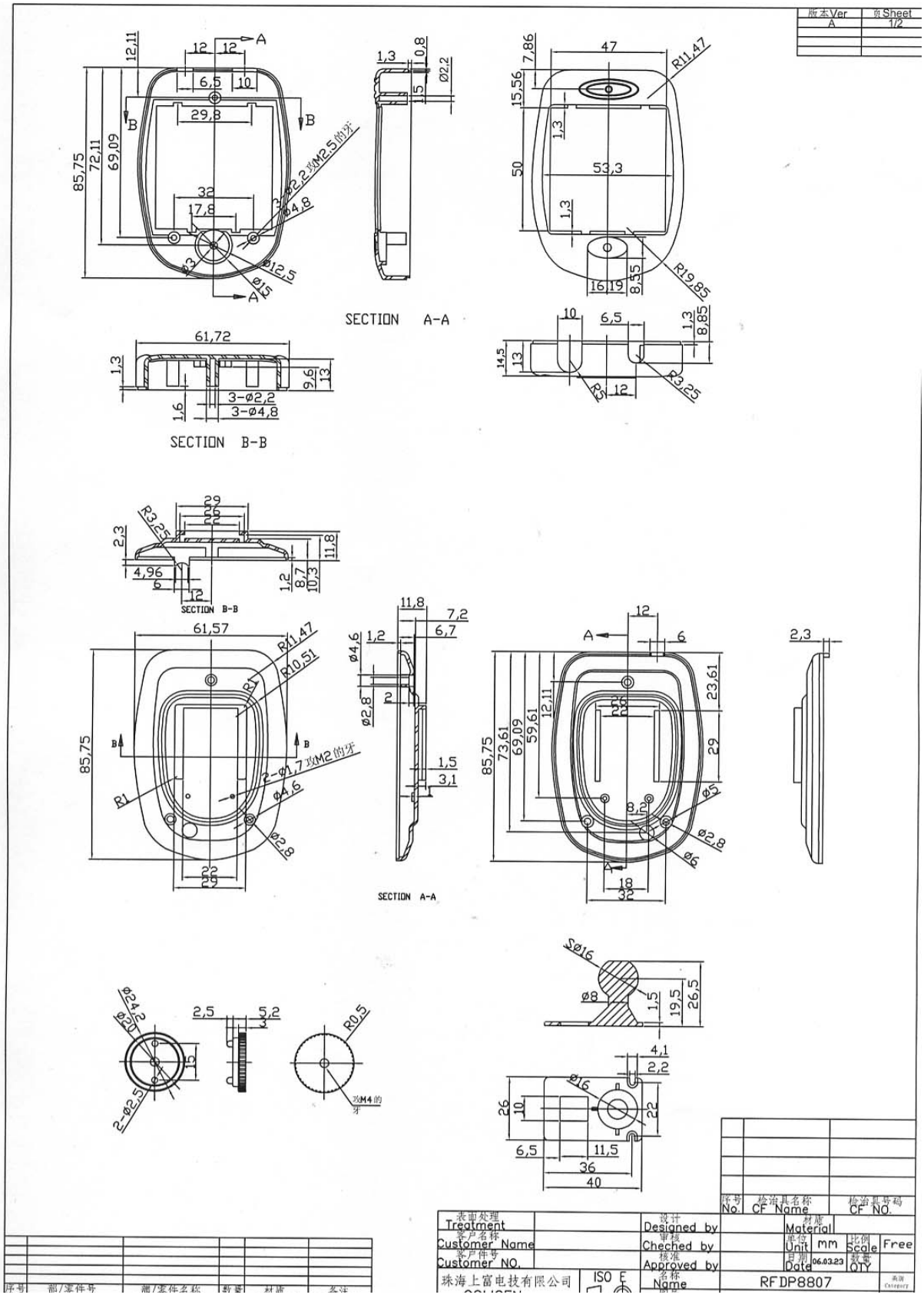

DRW.	RFDP8807-01	Dimension drawing

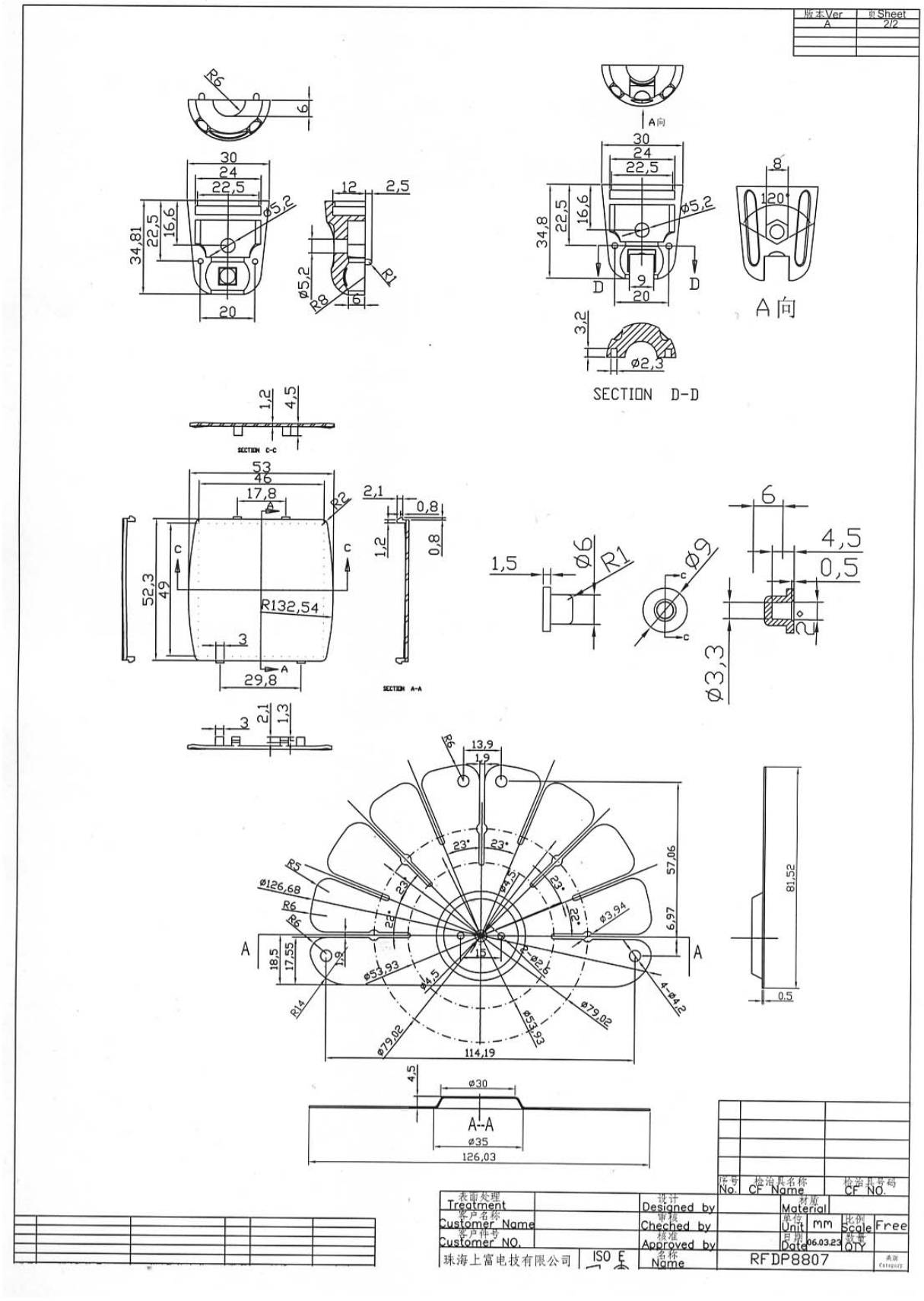

DRW.	RFDP8807-02	Dimension Drawing

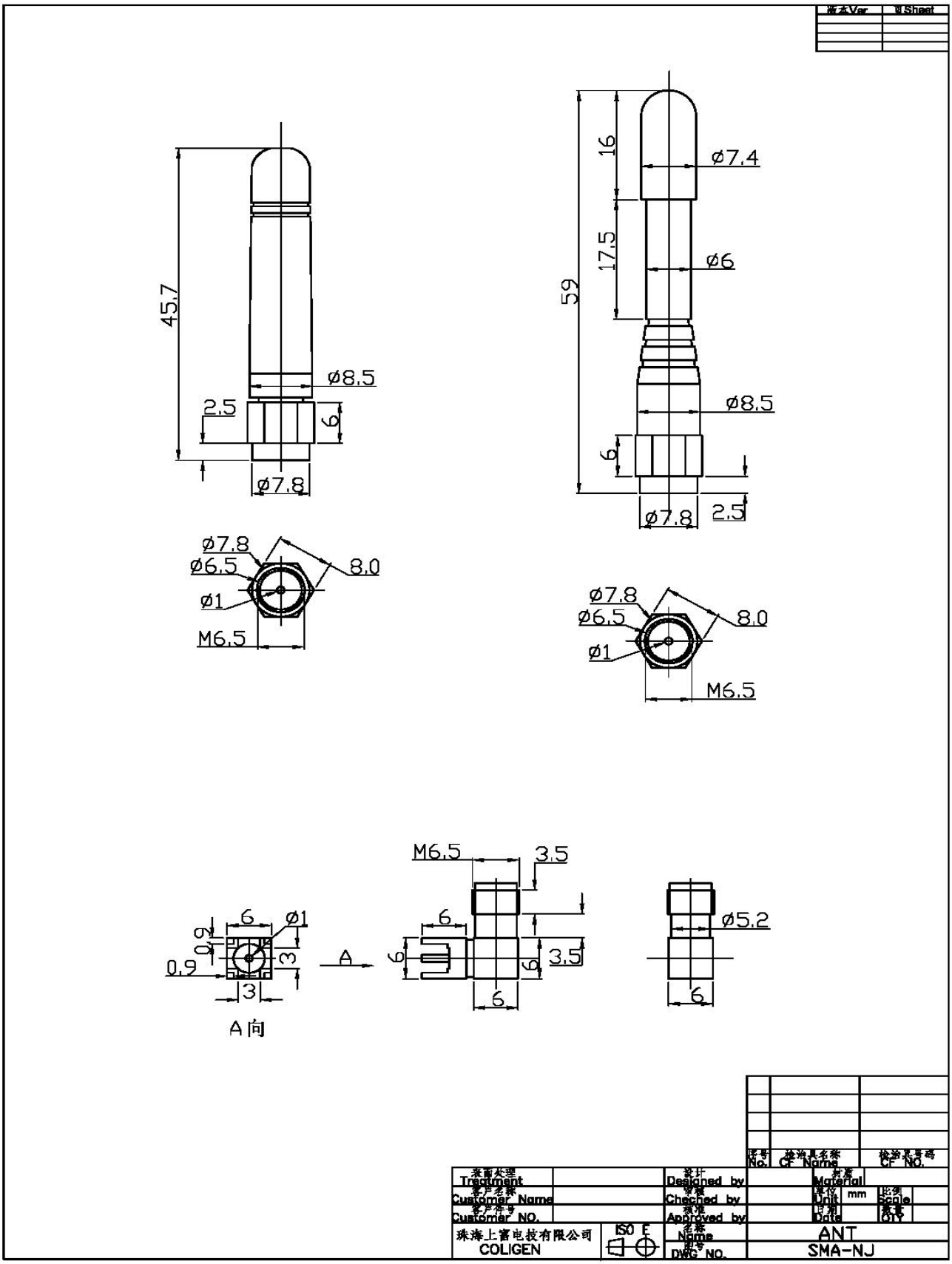

DRW.	**RFDP8807-03**	Dimension drawing

The FCC Label for RFDP8807

This device complies with part 15 of the FCC Rules.
Operation is subject to the following two conditions:
(1) This device may not cause harmful interference, and
(2) this device must accept any interference received,
including interference that may cause undesired operation.

FCC ID: TFKRFDP8807

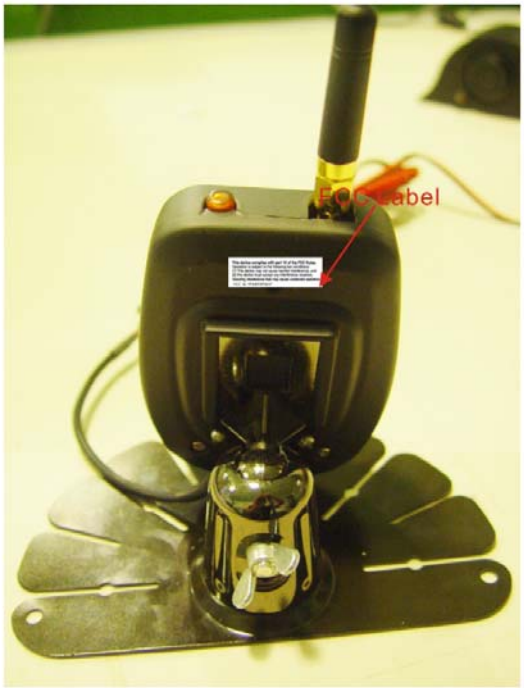

For RFDP8807

DRW.	**RFDP8807**-04	Rating label drawing

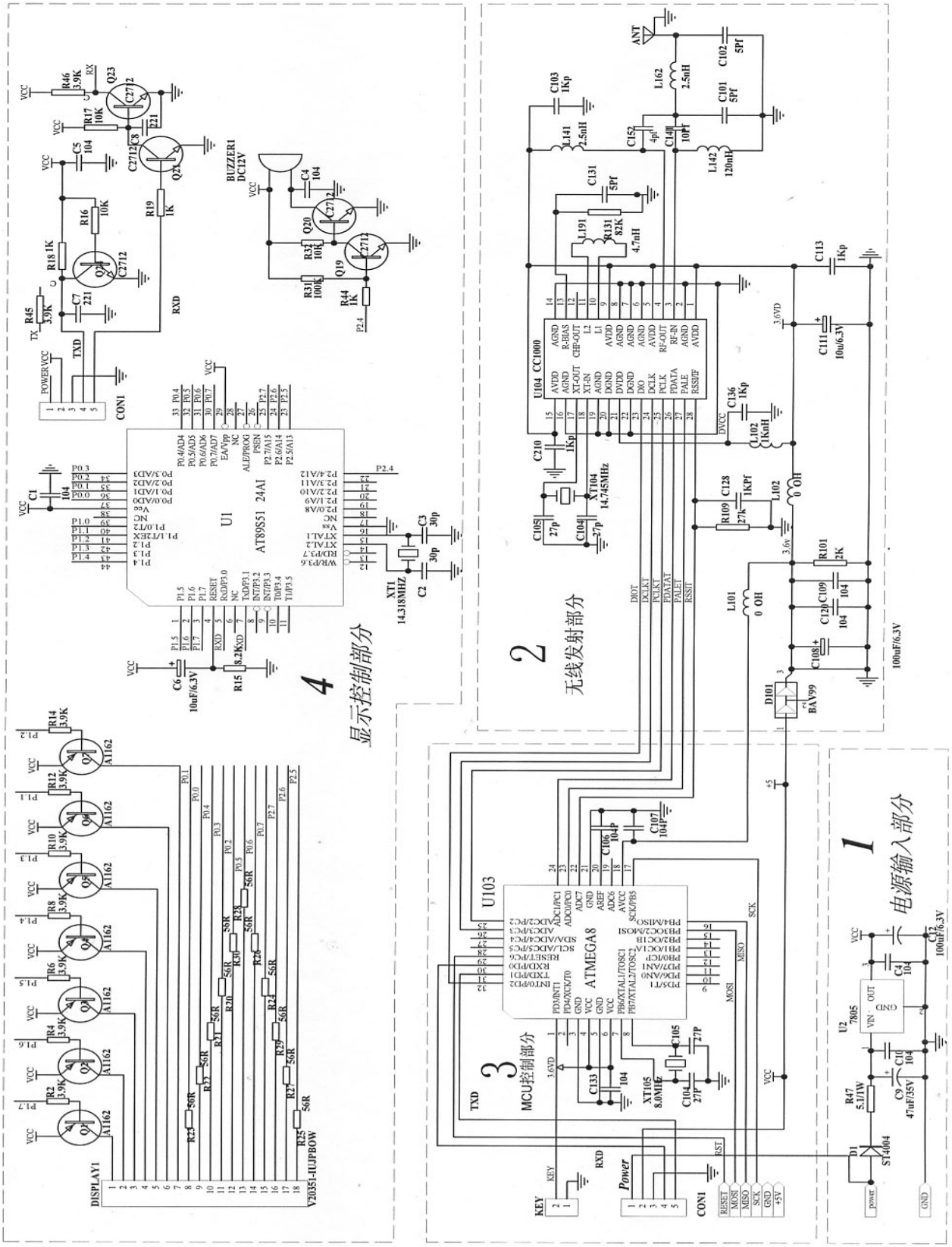

Circuit Diagram

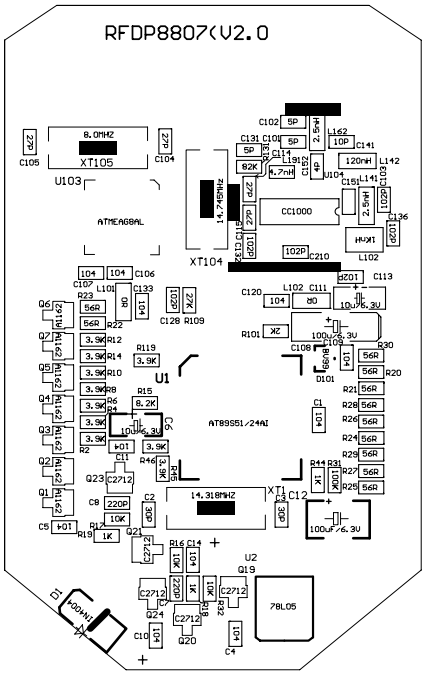
RFDP8807(V2.0
XT105
8.0MHZ
U103
ATMEGA8AL
XT104
14.745MHZ
CC1000
U1
AT89S51/24AI
14.318MHZ
U2
78L05

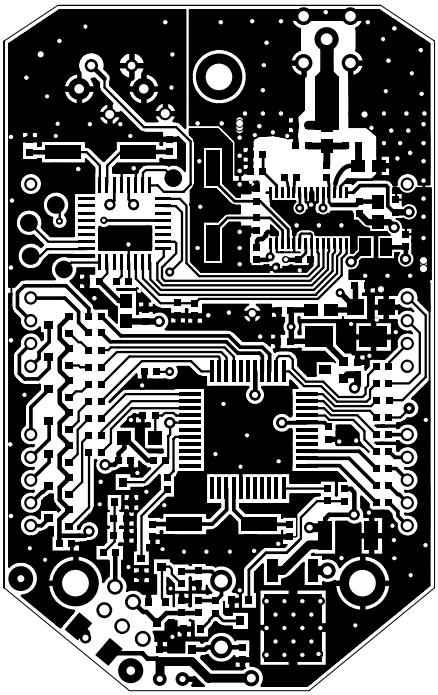

SMA
ANT
KEY1
TAA-2PGH
DISPLAY1
RFDP8807(V2.0)
V20351-IUJPB0W
BUZZER1
RXD
TXD
+5V
+12V
GND
C9
100uF/35V

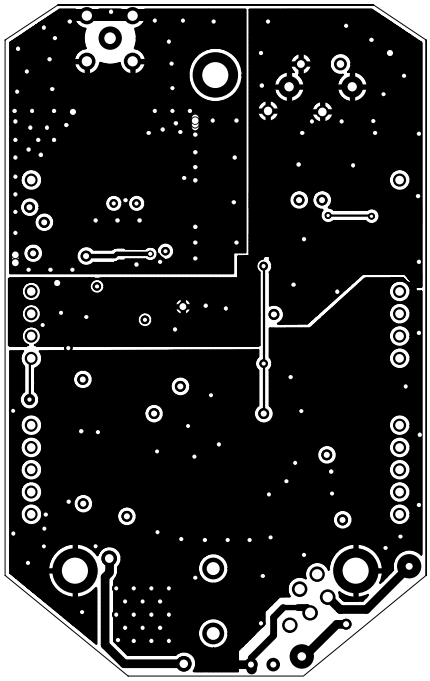

PCB Layout

Bill of materials

P/NO.	DESCRIPTION	QTY.	Remark
CC1000	Integrated circuit	1	U104
AT89S51/24AI	Integrated circuit	1	U1
ATMEGA8L-8AI	Integrated circuit	1	U103
14.745MHZ	Crystal	1	XT104
8.000MHZ	Crystal	1	XT105
14.318MHZ	Crystal	1	XT1
IC7805	Regulator	1	U2
RFDP8807	PCB	1	
TR SC2712	Transistor	5	Q19,Q20,Q21,Q23,Q24
TR SA1162	Transistor	7	Q1,Q2,Q3,Q4,Q5,Q6,Q7
V20351-IUJPBOW	Display	1	DISPLAY1
10UF/6.3V	Tery Capacitor	2	C6,C111
100UF/6.3V	Tery Capacitor	2	C12,C108
BAV99	Double Diode	1	D101
ST4004	Diode	1	D1
47UF/35V	Electrolytic Capacitor	1	C9
30P	Ceramic Capacitor	2	C2,C3
27P	Ceramic Capacitor	4	C104,C105,C114,C115
102P	Ceramic Capacitor	6	C103,C113, C128,C132,C136,C210
220P	Ceramic Capacitor	2	C7,C8
104P	Ceramic Capacitor	11	C1,C4,C5,C10,C11,C14,C106,C107,C109, C120, C133
10P	Ceramic Capacitor	1	C141
5P	Ceramic Capacitor	3	C101,C102,C131
4P	Ceramic Capacitor	1	C152
0Ω	Resistor	2	L101,L102
56Ω	Resistor	11	R20,R21,R22,R23,R24,R25,R26,R27,R28,R29,R30
5.1Ω/1W	Resistor	1	R47
1K	Resistor	3	R18,R19,R44
2K	Resistor	1	R101
3.9K	Resistor	10	R2,R4,R6,R8,R10,R12,R14,R45,R46,R119
8.2K	Resistor	1	R15
10K	Resistor	3	R16,R17,R32
27K	Resistor	1	R109
82K	Resistor	1	R131
100K	Resisto	1	R31
120N	Inductor	1	L142
4.7N	Inductor	1	L191
1000N	Inductor	1	L102

2.5N	Inductor	2	L162,L141
12V BUZZER	BUZZER	1	BUZZER1
TAA-2PGH1135-130	SWITCH	1	KEY1
LINE100034	Power wire	1	+12V,GND
98-3 **gumwater**	Omnipotent gumwater	1	AN
502 **gumwater**	gumwater	1	ANT
Dedicated ANT	RF ANT	1	ANT

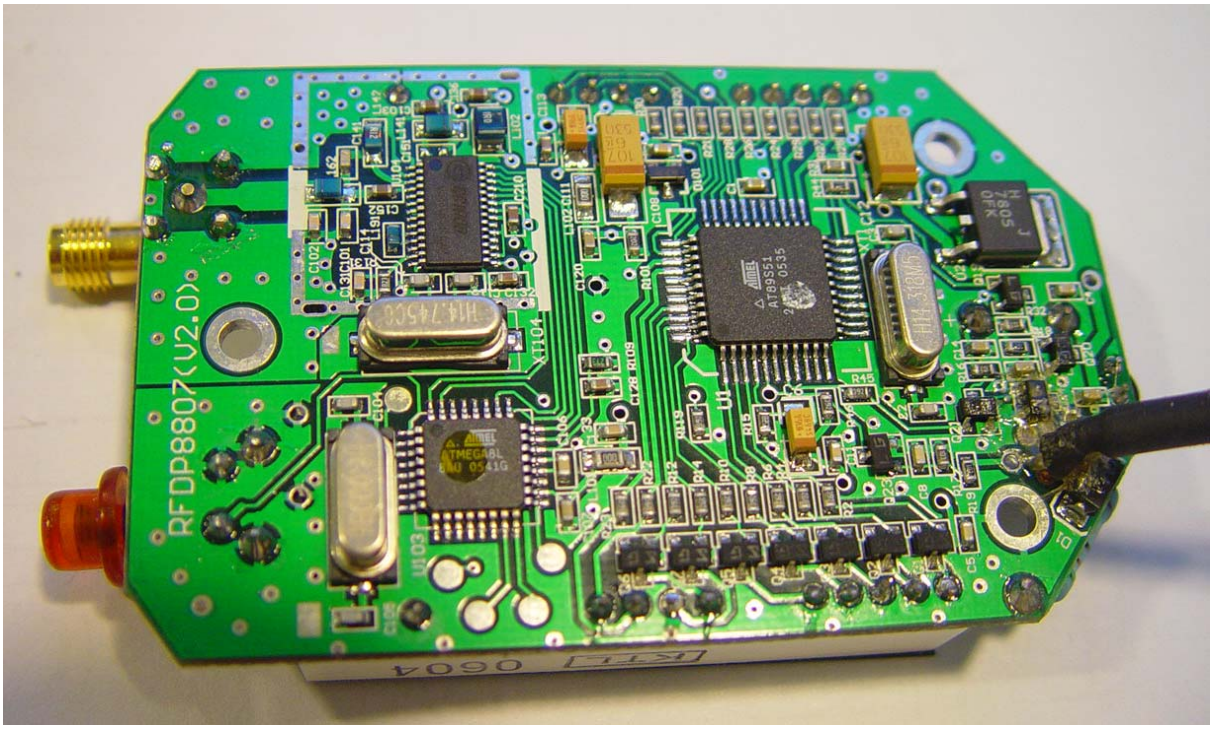
RFDP8807(V2.0)
AT89S51
ATMEGA8L

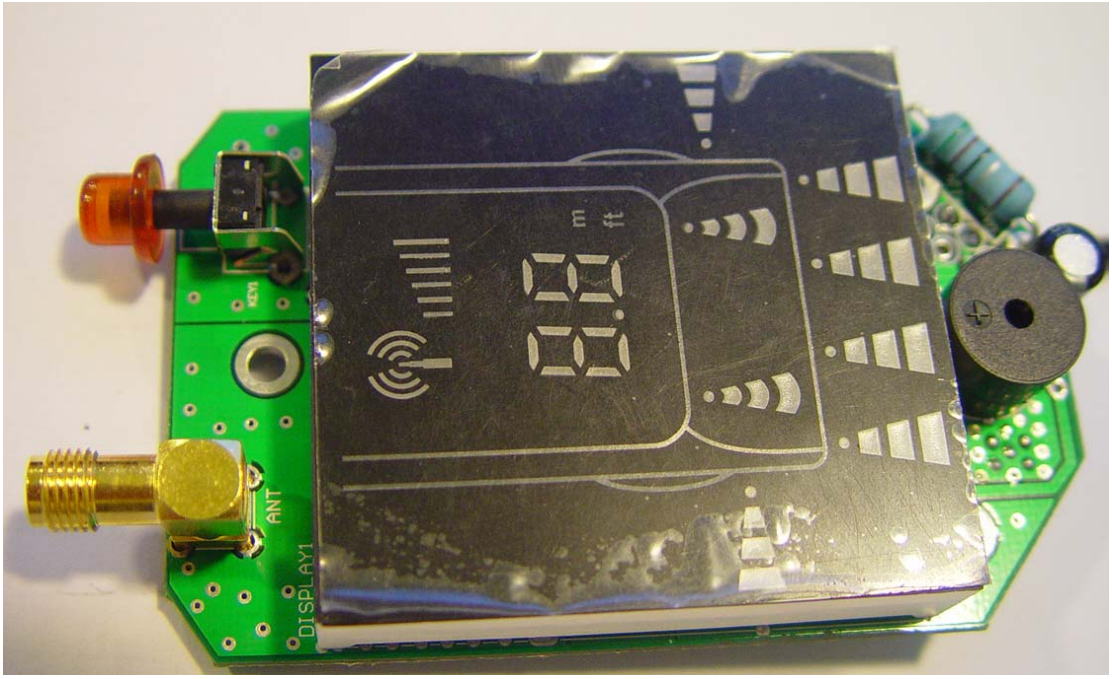
ANT
DISPLAY1

Product Photo

Product Photo