Pub No. 17201-032024

Model 17200
Remote Control Node
Transparent Mesh Transport Control

User Guide

Hardware Platform:
Model 17200

Copyright 2024

FCC PART 15.19 WARNING STATEMENT

THIS DEVICE COMPLIES WITH PART 15 OF THE FCC RULES. OPERATION IS SUBJECT TO THE FOLLOWING TWO CONDITIONS: (1) THIS DEVICE MAY NOT CAUSE HARMFUL INTERFERENCE, AND (2) THIS DEVICE MUST ACCEPT ANY INTERFERENCE RECEIVED, INCLUDING INTERFERENCE THAT MAY CAUSE UNDESIRED OPERATION.

FCC PART 15.21 WARNING STATEMENT

NOTE: THE GRANTEE IS NOT RESPONSIBLE FOR ANY CHANGES OR MODIFICATIONS NOT EXPRESSLY APPROVED BY THE PARTY RESPONSIBLE FOR COMPLIANCE. SUCH MODIFICATIONS COULD VOID THE USER'S AUTHORITY TO OPERATE THE EQUIPMENT.

IC RSS-GEN, SEC 8.4 WARNING STATEMENT

FCC PART 15.105(B) WARNING STATEMENT

NOTE: THIS EQUIPMENT HAS BEEN TESTED AND FOUND TO COMPLY WITH THE LIMITS FOR A CLASS B DIGITAL DEVICE, PURSUANT TO PART 15 OF THE FCC RULES. THESE LIMITS ARE DESIGNED TO PROVIDE REASONABLE PROTECTION AGAINST HARMFUL INTERFERENCE IN A RESIDENTIAL INSTALLATION. THIS EQUIPMENT GENERATES USES AND CAN RADIATE RADIO FREQUENCY ENERGY AND, IF NOT INSTALLED AND USED IN ACCORDANCE WITH THE INSTRUCTIONS, MAY CAUSE HARMFUL INTERFERENCE TO RADIO COMMUNICATIONS. HOWEVER, THERE IS NO GUARANTEE THAT INTERFERENCE WILL NOT OCCUR IN A PARTICULAR INSTALLATION. IF THIS EQUIPMENT DOES CAUSE HARMFUL INTERFERENCE TO RADIO OR TELEVISION RECEPTION, WHICH CAN BE DETERMINED BY TURNING THE EQUIPMENT OFF AND ON, THE USER IS ENCOURAGED TO TRY TO CORRECT THE INTERFERENCE BY ONE OR MORE OF THE FOLLOWING MEASURES:

- REORIENT OR RELOCATE THE RECEIVING ANTENNA.
- INCREASE THE SEPARATION BETWEEN THE EQUIPMENT AND RECEIVER.
- CONNECT THE EQUIPMENT INTO AN OUTLET ON A CIRCUIT DIFFERENT FROM THAT TO WHICH THE RECEIVER IS CONNECTED.
- CONSULT THE DEALER OR AN EXPERIENCED RADIO/TV TECHNICIAN FOR HELP.

ENGLISH:
THIS DEVICE COMPLIES WITH INDUSTRY CANADA LICENSE-EXEMPT RSS STANDARD(S). OPERATION IS SUBJECT TO THE FOLLOWING TWO CONDITIONS: (1) THIS DEVICE MAY NOT CAUSE INTERFERENCE, AND (2) THIS DEVICE MUST ACCEPT ANY INTERFERENCE, INCLUDING INTERFERENCE THAT MAY CAUSE UNDESIRED OPERATION OF THE DEVICE.

FRENCH:
LE PRÉSENT APPAREIL EST CONFORME AUX CNR D'INDUSTRIE CANADA APPLICABLES AUX APPAREILS RADIO EXEMPTS DE LICENCE. L'EXPLOITATION EST AUTORISÉE AUX DEUX CONDITIONS SUIVANTES : (1) L'APPAREIL NE DOIT PAS PRODUIRE DE BROUILLAGE, ET (2) L'UTILISATEUR DE L'APPAREIL DOIT ACCEPTER TOUT BROUILLAGE RADIOÉLECTRIQUE SUBI, MÊME SI LE BROUILLAGE EST SUSCEPTIBLE D'EN COMPROMETTRE LE FONCTIONNEMENT.

Copyright 2024

IMPORTANT NOTE: TO COMPLY WITH ISED CANADA AND FCC RF EXPOSURE COMPLIANCE REQUIREMENTS, THE ANTENNA USED FOR THIS TRANSMITTER MUST BE INSTALLED TO PROVIDE A SEPARATION DISTANCE OF AT LEAST 20 CM FROM ALL PERSONS AND MUST NOT BE CO-LOCATED OR OPERATING IN CONJUNCTION WITH ANY OTHER ANTENNA OR TRANSMITTER.

REMARQUE IMPORTANTE: POUR ÊTRE CONFORME AUX EXIGENCES DE CONFORMITÉ D'ISED CANADA ET DE LA FCC EN MATIÈRE D'EXPOSITION AUX RADIOFRÉQUENCES, L'ANTENNE UTILISÉE POUR CET ÉMETTEUR DOIT ÊTRE INSTALLÉE DE MANIÈRE À ASSURER UNE DISTANCE DE SÉPARATION D'AU MOINS 20 CM DE TOUTES LES PERSONNES. TOUTE AUTRE ANTENNE OU ÉMETTEUR.

Copyright 2024

INTRODUCTION

The model 17200 Remote Control Node (RCN) is a wireless radio control platform with embedded HVAC control logic and Direct Digital Control (DDC) capability. A wireless thermostat or room temperature sensor can be linked to one or more 17200 RCN's for precision temperature control of a variety of HVAC systems. Powered by EnerNetWorks™ meshing protocol, the 17200 establishes mesh network connectivity between RCN's forming a building-wide radio network. A gateway located anywhere in the building network cloud can support 400 – 500 RCN's and provides an interface between the mesh network and building automation system. The model 17200 RCN radio mesh network can in addition be used as a Transparent Message Transport (TMT) of complete EnOcean radio protocol messages.

The model 17200 can be factory programmed to operate in Legacy or direct EnOcean support mode. Legacy mode means the radio is configured for backwards compatibility with original ENERNET wireless systems radio frequency, modulation and data protocol. This manual covers 17200 operation and HVAC control configuration regardless of whether it operates in Legacy or direct EnOcean support mode. When operating in EnOcean support mode the manual covers Learn-In of various EnOcean protocol devices directly to the 17200. When combined with an ENERNET model 15700 EnOcean support accessory PCB, EnOcean devices can still be used with the 17200 configured for Legacy mode operation.

HVAC APPLICATION OVERVIEW

The model 17200 can be field configured for a variety of wireless HVAC applications. Combined with a wireless thermostat such as the ENERNET model 12400H, 12400S or model 17400 thermostat, or a Thermokon SR06 or other supported EnOcean sensor, the model 17200 provides the control logic necessary to run split a/c systems, heat pumps, fan coil units, packaged terminal heating/cooling equipment and others. The 17200 can support three fan speeds, auxiliary heat, compressor and reversing valve. In addition to a room sensor, EnOcean motion sensors and door switch can be learned into a 17200 or a model 15700 when using legacy mode creating smart occupied/unoccupied setback.

MODEL 17200 MOUNTING GUIDANCE

The model 17200 is an open PCB (Figure 1). It should be mounted in a clean, dry location that also provides physical protection and minimizes thermostat connection wire length between the HVAC equipment and the model 17200 PCB. Pick a location where the PCB will be safe from mechanical damage, excessive heat or cold and risk of condensate.

Brass stand-offs at the four corners of the model 17200 PCB are sized for a # 6 screw or bolt to secure the PCB to a flat surface. Alternatively, Eagle Plastic Devices adhesive backed locking PCB support posts (561-LAD187 or 561-LAD250) can be used. While the locking tabs on these posts will be captured inside of the stand-off and will not actually lock onto the 17200, they provide a very snug interference fit. As long as the surface the posts adhere to is clean, dry, smooth and flat, these posts work well and can in particular speed field mounting. Posts are available from a number of sources such as Mouser Electronics 1-800-346-6873 www.mouser.com.

MODEL 17200 POWER

The model 17200 is designed for 24vac low-voltage thermostat potential. Typically HVAC equipment provides 24vac for thermostats and is used to power the 17200. If the application requires independent power, use a UL/CSA Listed Class-II, 20VA, 24vac transformer connected to the R and C terminals.

ANTENNA POSITIONING

The standard antenna option is a 1-meter long RG174/U coaxial cable. The outer shield is stripped away from the last 3" of the cable leaving only the center conductor, which is the antenna. This allows antenna placement flexibility. Refer to Figure 2 and Coaxial Antenna Application Note.

Copyright 2024

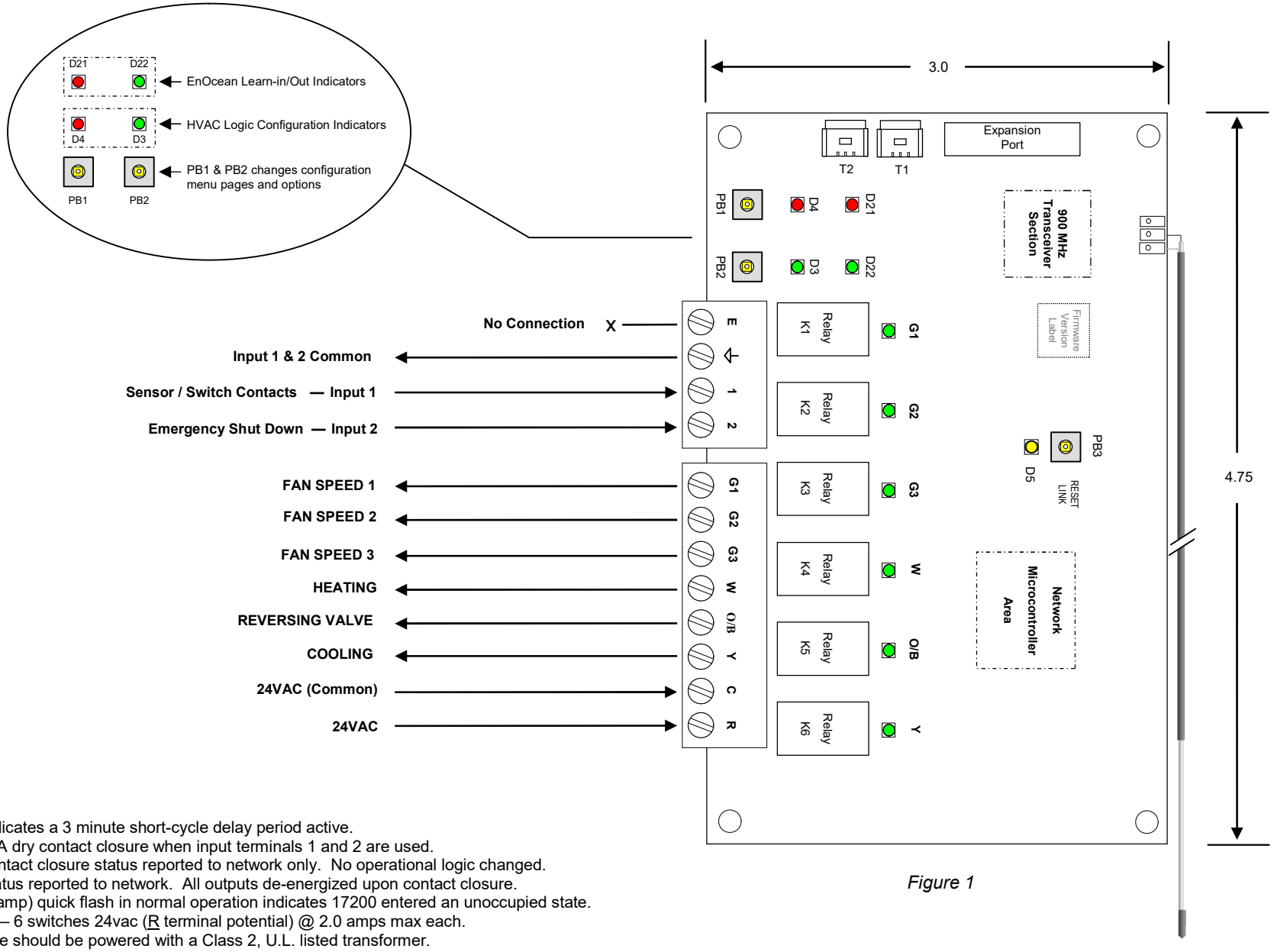

Figure 1

NOTES:
1. D5 ON indicates a 3 minute short-cycle delay period active.
2. Use form A dry contact closure when input terminals 1 and 2 are used.
3. Input 1 contact closure status reported to network only. No operational logic changed.
4. Input 2 status reported to network. All outputs de-energized upon contact closure.
5. D3 (PB2 lamp) quick flash in normal operation indicates 17200 entered an unoccupied state.
6. Output 1 — 6 switches 24vac (R terminal potential) @ 2.0 amps max each.
7. This device should be powered with a Class 2, U.L. listed transformer.
8. Wiring should conform to all national and local electrical codes.

COPYRIGHT 2024

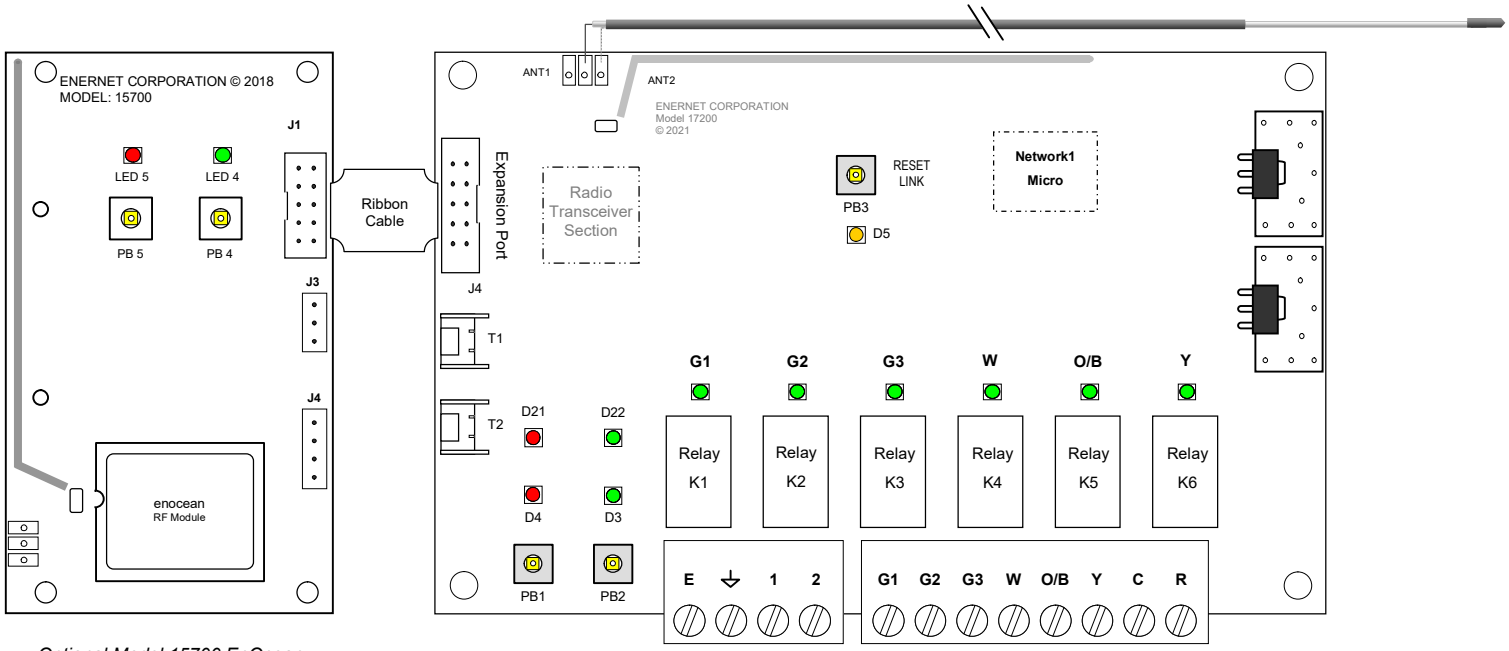

Optional Model 15700 EnOcean Devices Support Module

Figure 2

COAXIAL ANTENNA APPLICATION NOTE

The model 17200 Remote Control Node standard antenna option is a 1-meter long flexible coaxial cable. One end is connected at the circuit board. Approximately 3" of the outside jacket and shield are striped back at the free end — this is the actual antenna. The coaxial antenna option allows the installer to mount the circuit board where most appropriate and secure, while positioning the antenna in the most optimum position possible. Sheet metal, control boxes, ductwork, pipes and other electrical wires can interfere with RF signals to and from the 17200. For best performance, installers should location the antenna away from such shielding material to the extent possible. In packaged HVAC equipment, the antenna is often located in front of the indoor coil, between the coil and the front cover if the cover is plastic or near the makeup air opening at the bottom of the unit if it is metal. As is the case with any RF system, antenna placement and orientation is important. Antenna orientation is important to network performance. For best performance, orient all model 17200 antennas in a horizontal plane.

MODEL 17200 RCN CONFIGURATION SETUP

Three (3) buttons and four (4) LED indicator lights are used to configure HVAC control logic and occupancy system options and EnOcean devices Learn-In. 17200 RCN configuration setup is fully self-contained, no other equipment is required. PB3 (see figure 1) is used to enter into HVAC logic configuration mode.

Referring to Figure 3 below, there are two sets of RED and GREEN LED indicator lamps directly above the PB 1 & 2 buttons. The first set of indicators, D4 and D3 are used for HVAC Logic configuration. The next set, D21 and D22 are used for EnOcean related functions.

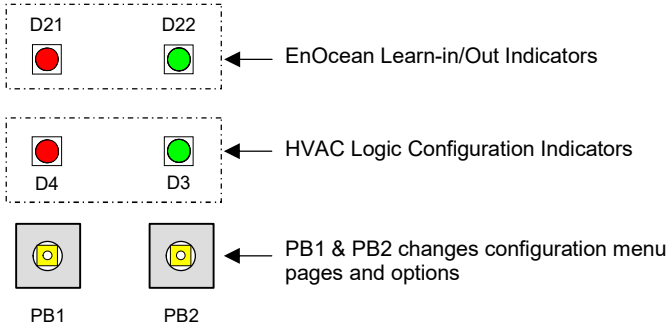

Figure 3

HVAC LOGIC CONFIGURATION

1. If any device is wired to J1 terminals, pull the terminal block off.
2. Press and hold PB3 until LED indicator lamps D4 & D3, located directly above PB 1 & PB2 flash alternately.
3. D4 flash count indicates Table number. D3 flash count indicates the option selection in that table. (NOTE: D4 and D3 will flash repeatedly to indicate the Table and Option.) PB1 advances Table number. PB2 advances the Option selection in that table.
4. Refer to Tables 1 – 9 below. Move to each table you want to adjust and select the desired option in those tables.

NOTE: At any time during the configuration process PB3 can be pressed to leave the configuration tables and return to normal operation. Press and release PB3 do not hold. At this time the node is running in the configuration last indicated in each table by D4 and D3. Changes are saved in non-volatile memory.

CONTROL MODE CONFIGURATION — TABLE 1

		D4	D3	
	CONFIGURATION OPTION	**TABLE COUNT**	**OPTION COUNT**	**DESCRIPTION**
1	PTAC * (Split System)	1	1	Fan speed-hunt in AUTO. Fan speed 1, 2 or 3 may be selected to run the fan continuously.
2	PTHP (HEAT PUMP)	1	2	Fan speed-hunt in AUTO. Fan speed 1, 2 or 3 may be selected to run the fan continuously.
3	ENERGY SAVER	1	3	Future add
4	FAN COIL (No Flow Valve)	1	4	Future add
5	FAN COIL (Flow Valve)	1	5	Future add

* Factory default setting.

SHORT-CYCLE CONFIGURATION — TABLE 2

		D4	D3	
	CONFIGURATION OPTION	**TABLE COUNT**	**OPTION COUNT**	**DESCRIPTION**
1	Short Cycle Active * (Factory Default)	2	1	Y (Compressor) is held off for 3-minutes after compressor runs or upon power up. In heat pump mode W is delayed with Y.
2	Short Cycle In-active	2	2	Y (Compressor) will energize immediately after compressor runs or upon power up.

* Factory default setting.

COPYRIGHT 2024

	MAX FAN SPEED CONFIGURATION — TABLE 3			
		D4	D3	
	CONFIGURATION OPTION	TABLE COUNT	OPTION COUNT	DESCRIPTION
1	Fan Speed 1 * (Factory Default)	3	1	Fan 1 on call for heat or cool. May be selected to run continuously.
2	Fan Speed 1 & 2 Enabled	3	2	Fan speed-hunt in AUTO. Fan speed 1 or 2 may be selected to run continuously.
3	Fan Speed 1, 2 & 3 Enabled	3	3	Fan speed-hunt in AUTO. Fan speed 1, 2 or 3 may be selected to run continuously.

* Factory default setting.
† Fan Speed-Hunt - Fan Auto function automatically sets fan speed based on departure from set point. E.g., 1º delta T = Fan 1, 2º delta T = Fan 2, 3º delta T = Fan 3.

	UNOCCUPIED SETBACK CONFIGURATION — TABLE 4			
		D4	D3	
	CONFIGURATION OPTION	TABLE COUNT	OPTION COUNT	DESCRIPTION
1	OFF	4	1	System does not respond to unoccupied status condition.
2	3 ˚F drift from nominal 72°F	4	2	Temperature will drift 3-degrees (down in HEATING, up in COOLING) from 72° when unoccupied state is declared.
3	6 ˚F drift from nominal 72°F *	4	3	Temperature will drift 6-degrees (down in HEATING, up in COOLING) from 72° when unoccupied state is declared.
4	9 ˚F drift from nominal 72°F	4	4	Temperature will drift 9-degrees (down in HEATING, up in COOLING) from 72° when unoccupied state is declared.
5	12 ˚F drift from nominal 72°F	4	5	Temperature will drift 12-degrees (down in HEATING, up in COOLING) from 72° when unoccupied state is declared.
6	15 ˚F drift from nominal 72°F	4	6	Temperature will drift 15-degrees (down in HEATING, up in COOLING) from 72° when unoccupied state is declared.

* Factory default setting.

	UNOCCUPIED DELAY CONFIGURATION — TABLE 5			
		D4	D3	
	CONFIGURATION OPTION	TABLE COUNT	OPTION COUNT	DESCRIPTION
1	2 Minute Delay *	5	1	System waits 2 mins after an unoccupied state is declared before Table 4 set back.
2	1 Hour Delay	5	2	System waits 1 hr after an unoccupied state is declared before Table 4 set back.
3	4 Hour Delay	5	3	System waits 4 hrs after an unoccupied state is declared before Table 4 set back.
4	8 Hour Delay	5	4	System waits 8 hrs after an unoccupied state is declared before Table 4 set back.
5	16 Hour Delay	5	5	System waits 16 hrs after an unoccupied state is declared before Table 4 set back.
6	24 Hour Delay	5	6	System waits 24 hrs after an unoccupied state is declared before Table 4 set back.

* Factory default setting.

UNOCCUPIED SETBACK:

*Any EnOcean EEP A5-07-01 compliant Occupancy/Motion sensor can be learned into the model 17200 RCN (See Model 17200 EnOcean Devices Learn-In Table – Motion/Occupancy Sensor). When **only** an occupancy/motion sensor is used (no door switch), the 17200 will wait the delay time set in Table 5 after the sensor reports the UNOCCUPIED state. Keep in mind that the motion sensor you're using may have its own delays before reporting unoccupied (no motion after "X" time). The delay time set in Table 5 is added to that time.*

An EEP D5-00-01 compliant door switch can be learned into the model 17200 (See Model 17200 EnOcean Devices Learn-In Table – Door Switch with Occupancy Sensor). When a door switch is learned-in with an occupancy/motion sensor the 17200 does not use the Table 5 delay and executes the following logic:

1. DOOR SW open/closed + MOTION within 5-minutes = OCCUPIED (no action).

2. DOOR SW open/closed + NO MOTION within 5-minutes = UNOCCUPIED (setback as configured in Table 4).

3. MOTION detected after UNOCCUPIED state declared = OCCUPIED (release setback).

4. DOOR SW in door open state for over 5-minutes = HVAC SYSTEM SHUTDOWN (release on door closed). NO MOTION within 5-minutes = UNOCCUPIED (setback as configured in Table 4).

Copyright 2024

	REVERSING VALVE LOGIC — TABLE 6			
		D4	D3	
	CONFIGURATION OPTION	TABLE COUNT	OPTION COUNT	DESCRIPTION
1	**B** - Reversing Valve Logic *	6	1	Heat pump mode: Reversing valve output active in call for HEATING.
2	**O** - Reversing Valve Logic	6	2	Heat pump mode: Reversing valve output active in call for COOLING.

* Factory default setting.

	STAGE 2 HEAT DELTA T CONFIGURATION — TABLE 7			
		D4	D3	
	CONFIGURATION OPTION	TABLE COUNT	OPTION COUNT	DESCRIPTION
1	1 Degree < Set Point	7	1	Energize 'W' on 1 degrees < Set Point
2	2 Degree < Set Point *	7	2	Energize 'W' on 2 degrees < Set Point
3	3 Degree < Set Point	7	3	Energize 'W' on 3 degrees < Set Point
4	4 Degree < Set Point	7	4	Energize 'W' on 4 degrees < Set Point
5	5 Degree < Set Point	7	5	Energize 'W' on 5 degrees < Set Point
6	6 Degree < Set Point	7	6	Energize 'W' on 6 degrees < Set Point

* Factory default setting.

IMPORTANT NOTES:

1.) The model 17200 control node factory defaults to fan speed 1. If your application requires 2 or 3 fan speeds, be sure to select the number needed as described in Fan Speed Configuration Table 3 above. Otherwise, the system will only energize G1 on call for fan regardless of the user manually selecting a higher continuous fan speed. Fan speed-hunting will not cause the G2 or G3 fan relays to energize if the 17200 Table 3 is not configured to support them.

	AUTO CHANGEOVER DEADBAND CONFIGURATION — TABLE 8			
		D4	D3	
	CONFIGURATION OPTION	TABLE COUNT	OPTION COUNT	DESCRIPTION
1	1 ˚F Deadband	8	1	> +/- 1 deg F (down in HEATING, up in COOLING) = HTG/CLG mode change.
2	2 ˚F Deadband *	8	2	> +/- 2 deg F (down in HEATING, up in COOLING) = HTG/CLG mode change.
3	3 ˚F Deadband	8	3	> +/- 3 deg F (down in HEATING, up in COOLING) = HTG/CLG mode change.
4	4 ˚F Deadband	8	4	> +/- 4 deg F (down in HEATING, up in COOLING) = HTG/CLG mode change.
5	5 ˚F Deadband	8	5	> +/- 5 deg F (down in HEATING, up in COOLING) = HTG/CLG mode change.
6	6 ˚F Deadband	8	6	> +/- 6 deg F (down in HEATING, up in COOLING) = HTG/CLG mode change.

* Factory default setting.

	OCCUPANCY STATE ON RESET CONFIGURATION — TABLE 9			
		D4	D3	
	CONFIGURATION OPTION	TABLE COUNT	OPTION COUNT	DESCRIPTION
1	Occupied *	9	1	Upon power up or other reset event system declares occupied state.
2	Unoccupied	9	2	Upon power up or other reset event system declares unoccupied state.

* Factory default setting.

2.) When an unoccupied state is declared (based on 17200 Configuration), D3 (first LED above the PB2 button) will flash once a second to indicate the node has dropped into unoccupied status.

3.) When an EEP D5-00-01 switch is learned into the 17200 RCN (See Model 17200 EnOcean Devices Learn-In Table – Emergency Shutdown Switch), the model 17200 will SHUTDOWN all HVAC control with all outputs going to the OFF state when the switch reports an OPEN state. Normal HVAC operation will resume when the switch returns to CLOSED status.

COPYRIGHT 2024

ENOCEAN DEVICES

The model 17200 RCN can be used with an ENERNET model 17400 thermostat or select EnOcean thermostats and room temperature sensors. The following section deals with the learn-in process of specified EnOcean devices using the Thermokon SR06/ENERNET 17400-SR06 HVAC room operating sensor.

NOTE: EnOcean devices have a "Learn" button. Learn buttons are typically accessed through a small hole on the side or back of the device (see Figure 5). Learning EnOcean devices in and out of the model 17200 RCN is accomplished using buttons and LED indicators on the 17200 PCB and then pressing the Learn button on the EnOcean device.

Row 1-4 of the Learn-In table, (called a page) sets up the 17200 to Learn-in or out an EnOcean device. Row/Page 5 enables Layer 1 repeating. Row 6, Restore Factory Default.

EnOcean Devices Learn-In Table Pages

Page 1: Link/Unlink SR06
Page 2: Link/Unlink Motion sensor
Page 3: Link/Unlink Door switch
Page 4: Link/Unlink window/emergency shutdown switch
Page 5: Layer 1 Repeat
Page 6: Reset to factory default

Press and release PB3 (Figure 1) if you wish to exit the configuration setup table without learning in a sensor.

ENOCEAN DEVICE LEARN-IN CONFIGURATION

1. If any device is wired to J1 terminals, pull the terminal block off.
2. Press and hold PB2 until D21 & D22 begin flashing (see Figure 3).
3. D21 flash count indicates the Page number. D22 flash count indicates the option selection in that Page. *(NOTE: D21 and D22 will flash repeatedly to indicate the Page and Option.)* PB1 advances Page number, PB2 advances the Option selection in that Page.
4. Refer to Model *17200 ENOCEAN DEVICES LEARN-IN TABLE*. Move to desired page and select an option in that page.
5. To Link an EnOcean device, select the appropriate page and option. Ensure Page and Option choice is correct by observing D21 & D22 flash counts then press and release the Learn button on the device. Following a successful learn-in or learn-out, D21 & D22 will light for a few seconds and automatically exit the learn-in table.

MODEL 17200 ENOCEAN DEVICES LEARN–IN TABLE

		D21	D22	
PG	**CONFIGURATION OPTION**	**PAGE COUNT**	**OPTION COUNT**	**DESCRIPTION**
1	LINK/UNLINK Room Temp/Set Pt. Sensor	1	1 - 3	1 = Learn-in, 2 = Learn-out, 3 = Null (EEP A5-10-04 compliant sensor*)
2	LINK/UNLINK MOTION/OCCUPANCY SENSOR	2	1 - 3	1 = Learn-in, 2 = Learn-out, 3 = Null (EEP A5-07-01 compliant sensor)
3	LINK/UNLINK DOOR SWITCH WITH OCCUPANCY SENSOR	3	1 - 3	1 = Learn-in, 2 = Learn-out, 3 = Null (EEP D5-00-01 compliant sensor)
4	LINK/UNLINK EMERGENCY SHUTDOWN SWITCH	4	1 - 3	1 = Learn-in, 2 = Learn-out, 3 = Null (EEP D5-00-01 compliant sensor)
5	ENOCEAN LAYER 1 REPEATS	5	1 - 2	1 = None, 2 = 1 Repeat
6	RESTORE TO FACTORY DEFAULT	6	1 - 3	1 = Restore Factory Default, 2 = N/A, 3 = Null (Select 1, press PB3 to Restore)

NOTE:
** The Model 17200 control currently accepts EEP Types A5-02-05, A5-10-03, A5-10-04 and Thermokon SR06 using A5-10-04 with the extension in DB0.0 and DB0.1 RORG-Byte: MSC (0xD1) | OFF, HEAT, COOL, AUTO mode.*

D21 & D22 will flash repeatedly until action is taken. When a device is learned in or out, D21 & D22 will both light for a few seconds followed by automatically leaving the Learn-In table.

At any time during the configuration process PB3 can be pressed to leave the configuration table and return to normal operation. Press and release PB3 do not hold.

Refer to Pub No. 15701-111722 when using the 17200 in Legacy mode with EnOcean devices.

Copyright 2024

GUIDELINES FOR DEVICES WITH SOLAR ENERGY STORAGE

Any SR06 model including the ENERNET 17400-SR06 (thermostat) can work without batteries, self-charging by integrated photovoltaic (PV) cells.

For optimal self-charging, mount the thermostat in a location with good ambient lighting. Minimum illumination of 200 lux (artificial or natural ambient light) is required for at least 8 hours each day to ensure sufficient charge time. As a point of reference, 200 lux is sufficient for day-to-day activity in the home. Office spaces will typically be closer to 400 lux.

The solar cell should be mounted facing towards the window direction if possible. Direct sun light should be avoided to minimize temperature reading errors.

The ENERNET 17400-SR06 is supplied in an operational state. If it has been stored in darkness for long periods of time, internal energy storage could be discharged. If the out-of-the-box initial charge is not sufficient to operate, the thermostat will need time under sufficient illumination to start to operate. Alternatively, a CR1632 battery can be installed to immediately power the thermostat.

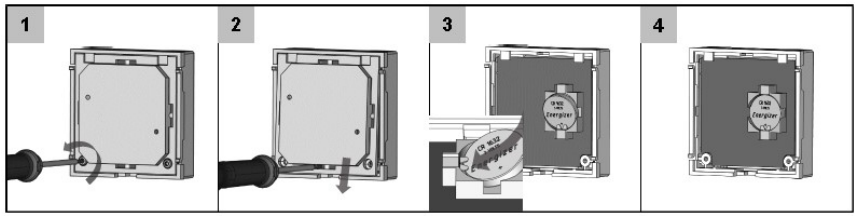

Figure 4

Depending on average ambient light conditions, the battery back-up option may be required. Operating time with battery will vary, however typical operating time should be several years. The thermostat will automatically switch to PV cells whenever enough power can be derived from ambient light conditions, further extending battery life.

LOCATING THERMOSTAT

For best results, the thermostat should be located approximately five feet above the floor on an inside wall in an area with good air circulation. Avoid drafts from air ducts and windows and heat from sun light, lighting fixtures, appliances, fireplaces, etc.

MOUNTING ADVICES

1. Attach base plate with screws or double-sided adhesive tape.
2. Place frame/bezel onto the base plate.
3. Finally, press thermostat into the frame center.

LINKING THERMOSTAT AND 17200

Upon delivery, the thermostat might be in default shipping mode and unresponsive to button presses. In this case, use a paper clip or equivalent to press and release the learn button, which is accessed through the hole marked ‘L’ on back of thermostat.

Refer to Model 17200 EnOcean Devices Learn–In Table on Page 9 for all sensor types supported. To learn-in the 17400B-SR06 or other SR06 model:

1. Press & hold PB2 on 17200 PCB until D21 & D22 begin flashing (see Figure 3).

2. D21 flash count = Page number. D22 flash count = option selection in that Page. PB1 advances Page number. PB2 advances the Option selection in that Page.

3. Set to Page 1, Option 1: D21 = 1 flash
D22 = 1 flash

4. Short button press (<1 sec) of the “learn button” on the back side of the thermostat, see Figure 5. (Short press, don’t hold the learn button.)

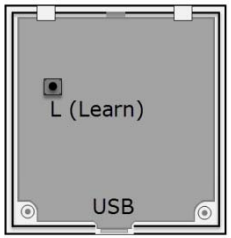

Figure 5

Copyright 2024

SR06 Configuration:

Most users will not need to adjust. Consult ENERNET and Thermokon AirConfig literature.

Options outlined in red should not be changed. Options that can not be changed (grayed out) are not supported by the hardware.

Generic Tab

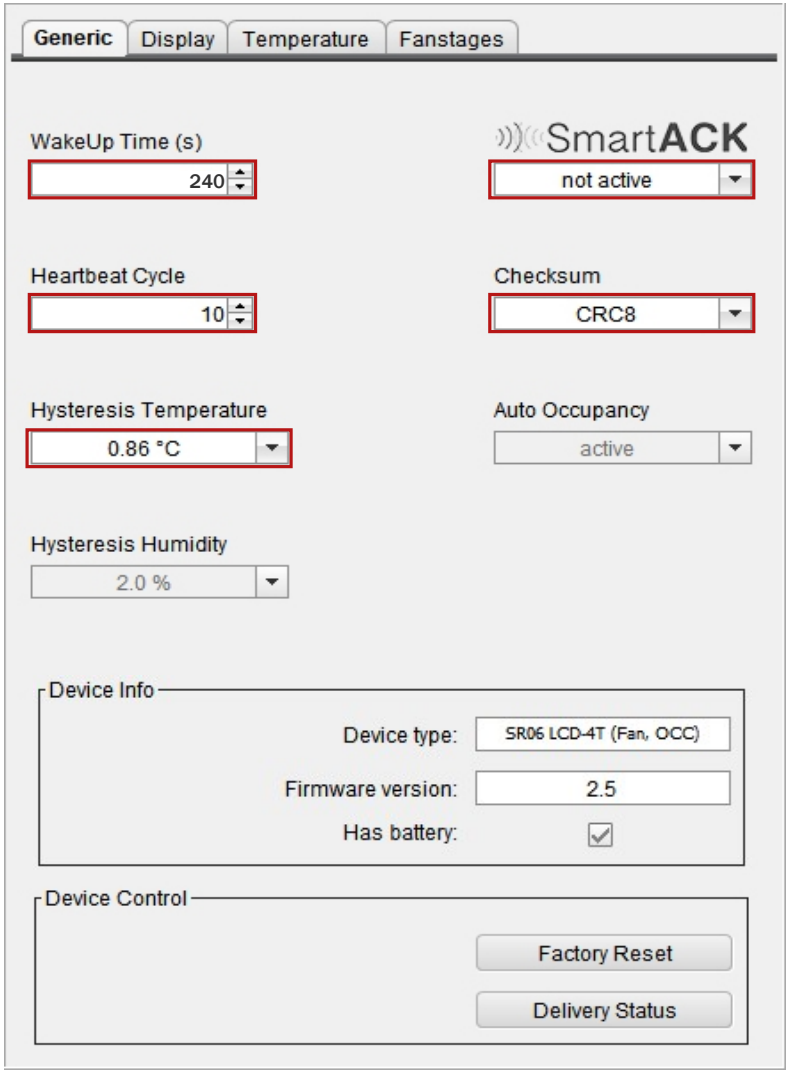

Display Tab

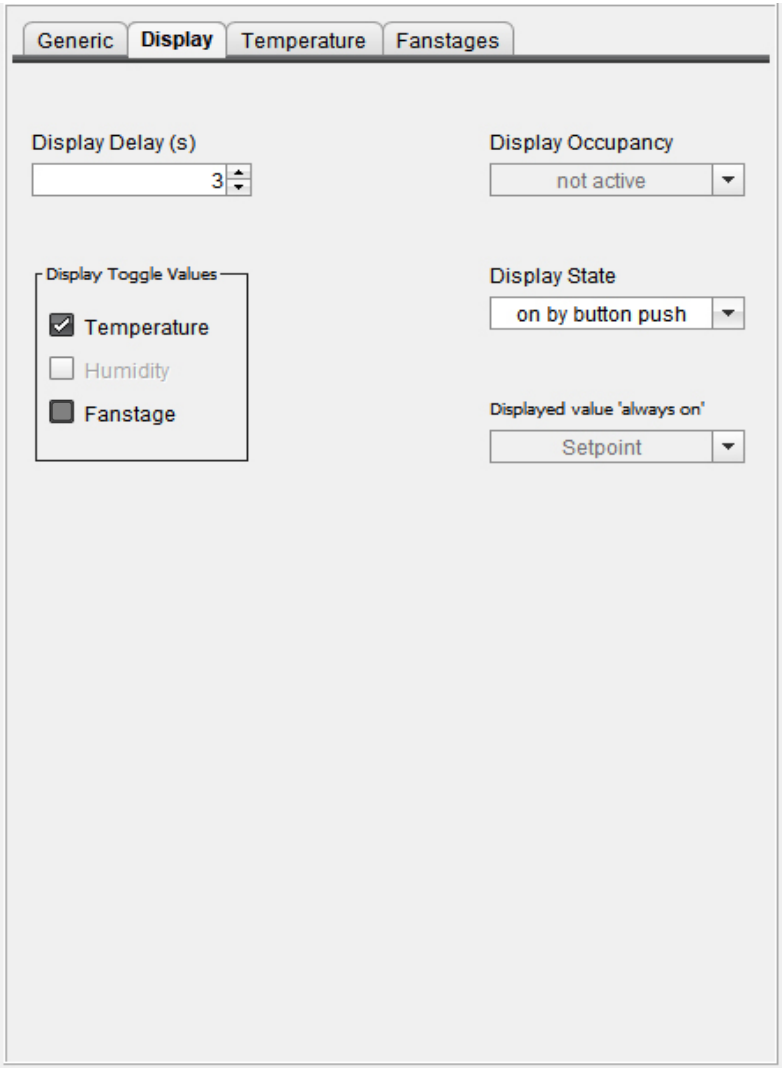

Temperature Tab

Fanstages

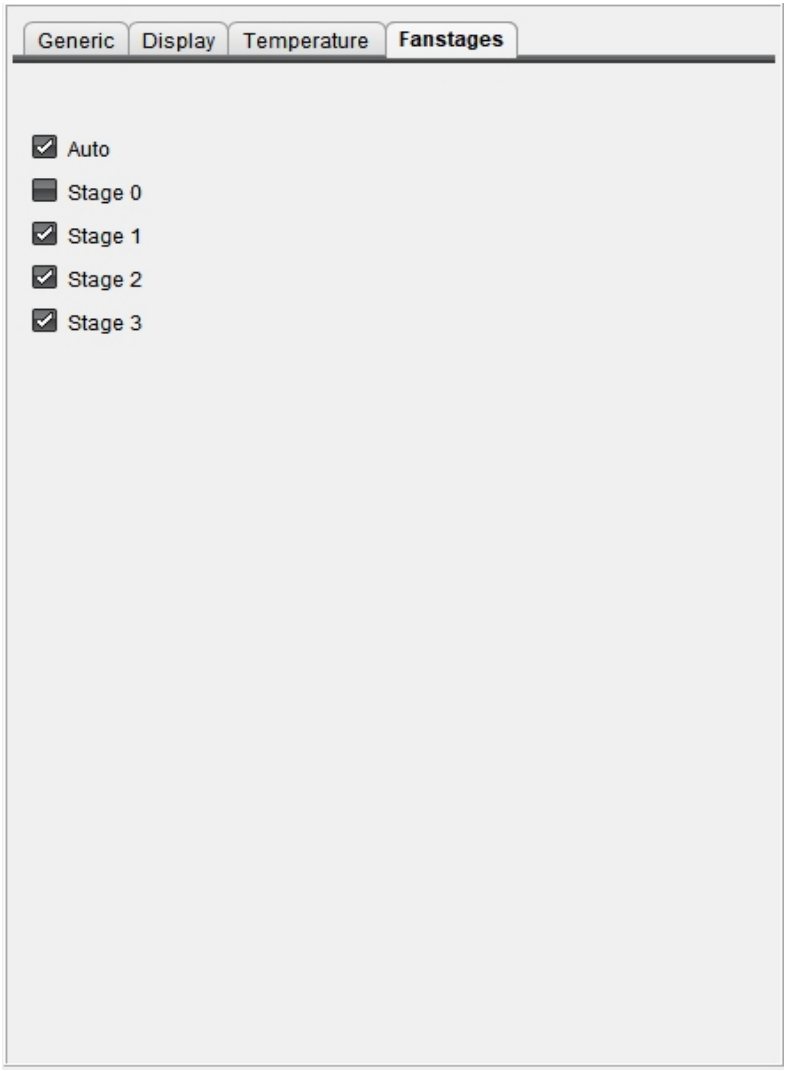

Copyright 2024

ENERNET CORPORATION PROVIDES THIS PUBLICATION "AS IS" WITHOUT WARRANTY OF ANY KIND, EITHER EXPRESS OR IMPLIED, INCLUDING, BUT NOT LIMITED TO, THE IMPLIED WARRANTIES OF MERCHANTABILITY OR FITNESS FOR A PARTICULAR PURPOSE.

THIS MANUAL MAY CONTAIN TECHNICAL INACCURACIES AND/OR TYPOGRAPHICAL ERRORS. CHANGES ARE PERIODICALLY MADE TO THIS MANUAL, WHICH ARE INCORPORATED IN LATER EDITIONS.

ENERNET CORPORATION MAY MAKE CHANGES AND IMPROVEMENTS TO THE PRODUCT(S) AND/OR PROGRAMS DESCRIBED IN THIS PUBLICATION AT ANY TIME WITHOUT NOTICE.

IN NO EVENT WILL ENERNET CORPORATION BE LIABLE FOR DAMAGES, INCLUDING LOST PROFITS, LOST SAVINGS OR OTHER INCIDENTAL OR CONSEQUENTIAL DAMAGES ARISING OUT OF THE USE OF OR INABILITY TO USE SUCH PRODUCT, EVEN IF ENERNET CORPORATION OR AN APPROVED RESELLER HAS BEEN ADVISED OF THE POSSIBILITY OF SUCH DAMAGES, OR FOR ANY CLAIM BY ANY OTHER PARTY.

ENERNET
CORPORATION
272 JUNE APPLE ROAD, TRADE, TENNESSEE 37691
PHONE: (315) 449-0839 FAX: (315) 259-1970