stryker®

32” 4K OLED Surgical Display

REF 0240-031-300

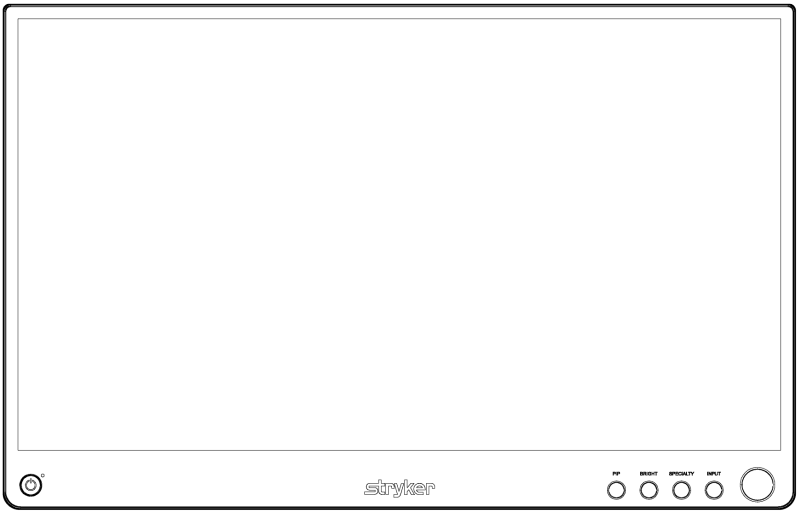

CE Rx ONLY

Table of Contents

Warnings and Cautions EN-3

Warnings EN-3
Cautions EN-4

About Your Device EN-6

Intended Use and Indications for Use EN-6
Intended Conditions for Use EN-6
Contraindications EN-6
Patient and/or User Population EN-6
Package Contents EN-7
Device Features EN-8

Setup EN-12

Connections EN-12
Basic Video Setup EN-16

Operation EN-17

On-Screen Display (OSD) EN-17
OSD Menus EN-19
Troubleshooting EN-21

Cleaning and Maintenance EN-22

General Recommendations EN-22
Cleaning EN-22
Inspection EN-23
Electrical Safety Testing EN-23
Adverse Event Reporting EN-23
Storage EN-23
Service Life EN-23
Disposal EN-23

Technical Specifications EN-25

General Description EN-25
Classification and Approvals EN-26
Compliance EN-26

Electromagnetic Compatibility EN-27

Symbols and Definitions EN-31

Device/Package Labeling EN-31

Warnings and Cautions

Please read this manual and follow its instructions carefully. The words warning, caution, and note carry special meanings and should be carefully reviewed:

- **Warning**: Indicates measures to avoid potential serious injury to the user and the patient.
- **Caution**: Indicates risks to the equipment. Failure to follow cautions may result in product damage.
- **Note**: Provides special information to clarify instructions or present additional useful information.

Warnings

To avoid potential serious injury to the user and the patient, please note the following warnings:

1. Read this manual thoroughly and be familiar with its contents prior to using this device.
2. Federal law (United States of America) restricts this device to sale by, or on the order of, a physician.
3. Carefully unpack the device and check if any damage occurred during shipment.
4. This device is non-sterile and therefore should not be placed in the sterile field.
5. Do not place the device or any other heavy object on the power cord. Damage to the cord can cause fire or electric shock.
6. To avoid electric shock, avoid removing any components of the product housing.
7. This device should not be used adjacent to or stacked with other devices. If adjacent or stacked use is necessary, the device should be observed to verify normal operation in the configuration in which it will be used.
8. Test this device prior to a surgical procedure. This device was fully tested at the factory before shipment.
9. Do not attempt internal repairs or adjustments not specifically detailed in this manual. Ensure that readjustments, modifications, and/or repairs are carried out by persons authorized by Stryker Endoscopy.
10. Do not put any object into the panel. If this occurs, unplug the device and have it checked by qualified personnel before operating it any further.
11. Use appropriate caution to prevent contact with fluids if the device is being used with a power supply in patient environments.
12. The use of cables and/or other accessories with this device, other than those specified, may result in increased emissions or decreased immunity of this device.
13. This device has no means to be incorporated in an IT-network in the clinical environment.
14. The protective screen is made of tested impact resistant materials. Nonetheless there is the possibility that it may crack if subject to strong impacts. Evaluate and prevent the risk of possible breakages of the protective screen by correctly handling and positioning the display in the operating room.
15. To avoid risk of fire, do not use the device in the presence of flammable anesthetics.
16. To avoid risk of electric shock, this equipment must only be connected to a supply mains with protective earth.
17. Unplug the display power cord when it is going to be left unused for an extended period of time.
18. Unplug the display power cord from the AC outlet before any service.

19. If the display does not operate normally, for example, if there are any unusual sounds or smells emmitting from it, unplug it immediately and contact an authorized dealer or service center.

Cautions

1. To achieve grounding reliability, connect the device to an AC adapter that is connected to a hospital-grade power cord, and ensure the power cord is plugged into a grounded power outlet.
2. Do not sterilize the device, as the delicate electronics cannot withstand this procedure.
3. Use only the proprietary power supply for the display. If you use an extension cable, completely secure the connection to the DC power cord of the power supply.
4. Never operate the device immediately after transportation from a cold location to a warm location.
5. To connect to an international power supply, use an attachment plug appropriate for the power outlet, as outlined in the "Technical Specifications" section of this manual.
6. Unplug the device if it is not to be used for an extended period of time. To disconnect the power cord from the display, unscrew the plug first, then pull the cord out by the plug. Never pull the cord itself.
7. Do not expose the device to moisture or apply liquid cleaners directly to the screen. Spray the cleaning solution onto a soft cloth and clean gently. For further detail, refer to the "Cleaning and Maintenance" section of this manual.
8. Allow adequate air circulation to prevent internal heat buildup. Do not place the device on surfaces (rugs, blankets, etc.) or near materials (curtains, draperies). The device is cooled by natural convection and has no fan.
9. Do not touch the patient with signal input or output connectors. Equipment with SIP/SOP connectors should either comply with IEC 60601-1 and/or IEC 60601-1-1 harmonized national standards or the combination should be evaluated for safety.
10. To ensure electromagnetic compatibility, refer to the "Electromagnetic Compatibility" section of this manual. The 32" 4K OLED Surgical Display (0240031300) must be installed and operated according to the EMC information provided in this manual.
11. Pay close attention to the cleaning instructions in this manual. A deviation may cause damage.
12. Do not install the device near sunlight, excessive dust, mechanical vibration, or shock.
13. Do not position the device so that it is difficult to disconnect the power cord from the supply mains.
14. Do not operate with the display screen facing downward.
15. Handle the device with care. Do not strike or scratch the screen.
16. Changes or modifications not expressly approved by the party responsible for compliance could void the user's authority to operate the device.
17. To connect the display over HDMI at lengths over 3 m, P47587 is recommended. Use of cables longer than 3m can lead to image instability.

Note: This device has been tested and found to comply with the limit for a Class B digital device, pursuant to Part 15 of the FCC Rules. These limits are designed to provide reasonable protection against harmful interference in a residential installation. This device generates, uses, and can radiate radio frequency energy and, if not installed and used in accordance with the instructions, may cause harmful interference to radio communications. There is no guarantee that interference will not occur in a particular installation, which can be determined by turning the device off and on. The user is encouraged to try to correct the interference by one or more of the following measures:

- Reorient or relocate the receiving device.
- Increase the separation distance between the device.
- Connect the device to an outlet on a circuit different from that to which the other device(s) are connected.
- Consult the manufacturer or field service technician for help.

Note: Modifications not expressly approved by the party responsible for FCC compliance could void the user's authority to operate the equipment.

The warranty is void if any of these warnings or cautions are disregarded.

This product contains electrical waste or electronic equipment. It must not be disposed of as unsorted municipal waste and must be collected separately.

For more information, see Disposal.

Note: Product fuse has a lower breaking capacity. Do not install at the building power system, prospective short-circuit current exceeding 35A.

About Your Device

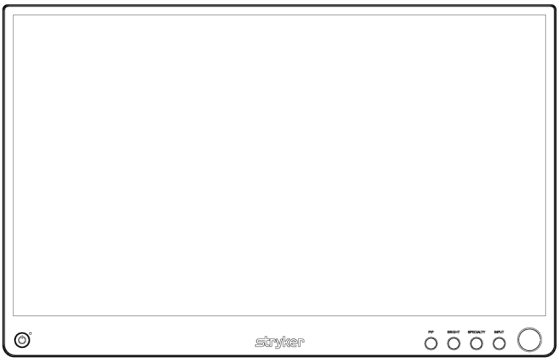

The 32" 4K OLED Surgical Display is a wide screen OLED surgical display that can support a maximum resolution of 4K (4096 x 2160). The display supports the following video inputs: digital RGB (DVI) and HDMI 2.0b video inputs. It supports serial communication via the RS-232 port and SDC4K/HUB port. It also has USB ports that each supply power (5V, 1A) for accessories and peripherals (not used for data transfer).

Intended Use and Indications for Use

The 32" 4K OLED Surgical Display is intended to display and transfer medical device data during general surgical procedures. The display is intended for use by qualified physicians and operating room personnel for general surgical procedures.

Intended Conditions for Use

This display is intended to be used in the near-patient environment.

Contraindications

There are no known contraindications for this device.

Patient and/or User Population

Adult and pediatric patients undergoing general surgical procedures.

Package Contents

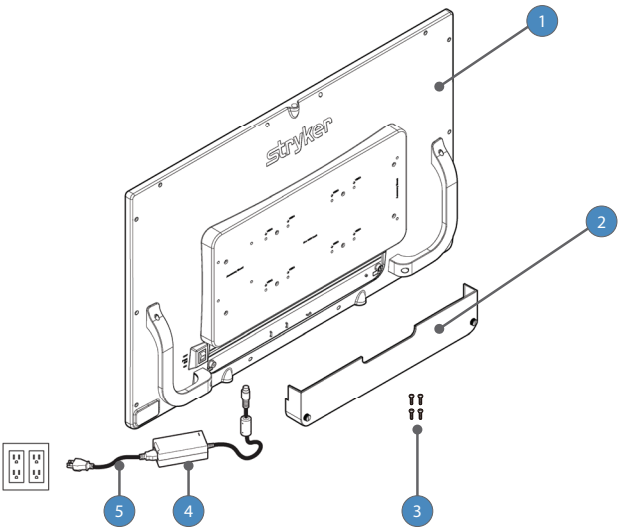

Reference	Part Number	Package Contents
1	0240031300	32″ 4K OLED Surgical Display
2	-	Cable Cover
3	-	(4) M4 x 16 mm VESA screws
4	0240031004	Medical Power Supply Model: BPM150S24F11 (BridgePower)
5	-	Hospital-grade AC power cord

Reference	Optional Accessories
0240031004	Medical Power Supply Model: BPM150S24F11 (BridgePower)
0240030951	15 ft. (4.6 m) (5 pin) DC extension cable Model: 1501047***(BridgePower)***: blank or 001~999
0240030952	75 ft. (22.8 m) (5 pin) DC extension cable Model: 1501047***(BridgePower)***: blank or 001~999
P47587	AOC HDMI High Speed Cable, 10 m LG Model: MFG P47587 (Opticis USA, LLC)

Device Features

Front Panel

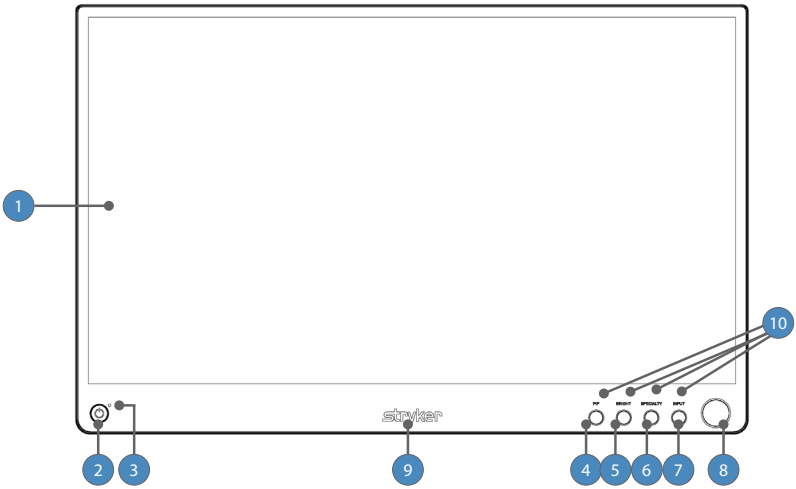

1.	**Display screen**	Shows the video image
2.	**Power switch (soft)**	Powers the display ON and OFF
3.	**Power LED**	**Indicates current status:** Solid Green - Display is powered on or is in screen saver mode Blinking Green - Display is in sleep mode
4.	**PIP**	Accesses the Picture in Picture adjustment menu.
5.	**Bright**	Accesses the Brightness adjustment menu.
6.	**Specialty**	Accesses the Specialty selection menu.
7.	**Input**	Accesses the Input selection menu.
8.	**Rotary control knob**	Accesses the on-screen menus and navigates through its function.
9.	**Logo light**	**Indicates current status:** No illumination - Off Continuous white illumination - On Slowly fading white illumination - Sleep mode (see Sleep Timer settings for detail)
10.	**Quick Keys light**	**Indicates current status:** No illumination - Off Continuous white illumination - On

Rear Panel

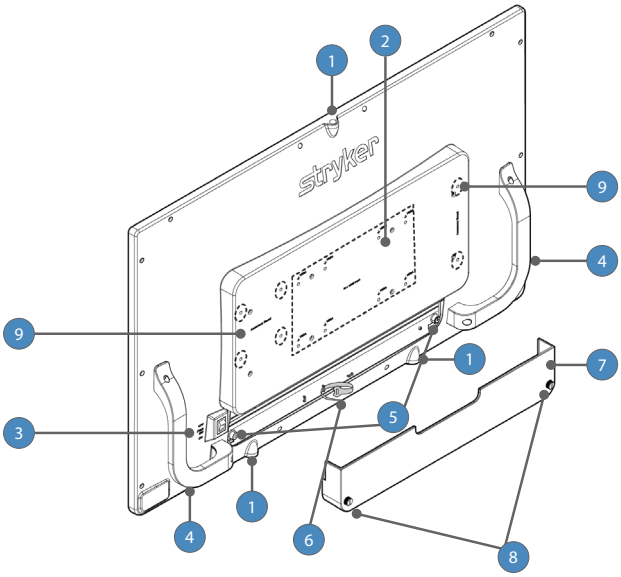

1.	**Accessory mount (3)**	Provide an access point for mounting optional accessories. (accepts 1/4”-20 screws)
2.	**VESA mounting holes**	Provide access points for mounting the display using provided screws. (100x100 mm, 200x100 mm, accepts M4 x 16 mm screws)
3.	**Power switch (hard)**	Turns the input DC power ON and OFF.
4.	**Handles**	Aid in display positioning from the rear. **Caution:** The handles are not intended to bear the entire weight of the display.
5.	**Cable cover mounts**	Attach the bottom of the cable cover to the display.
6.	**Velcro straps**	Straps aid in cable management.
7.	**Cable cover**	Covers and conceals cables.
8.	**Cable cover screws**	Secure the cable cover onto the display.
9.	**Accessory mount holes**	Provide access points for mounting optional video accessories. (accepts M4 x 16 mm screws)

Cable Cover

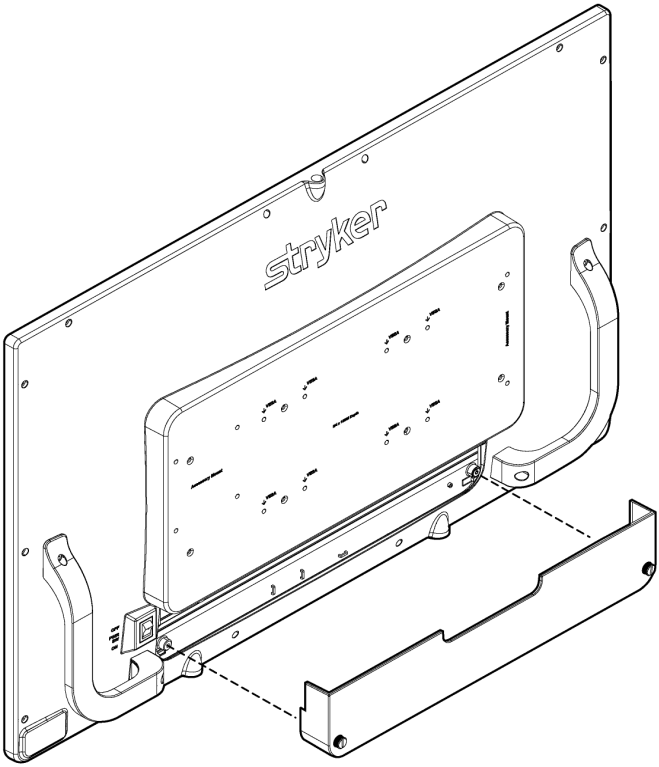

Installing the Cable Cover

1. Align the left and right edges and screw holes of the cable cover onto the bottom rear of the display.
2. Rotate the two thumbscrews clockwise to secure the cable cover onto the display.

Removing the Cable Cover

1. Rotate the two thumbscrews counter-clockwise until they have completely detached from the rear of the display.
2. Pull the cable cover away from the display to detach it from the display.

Display Handles

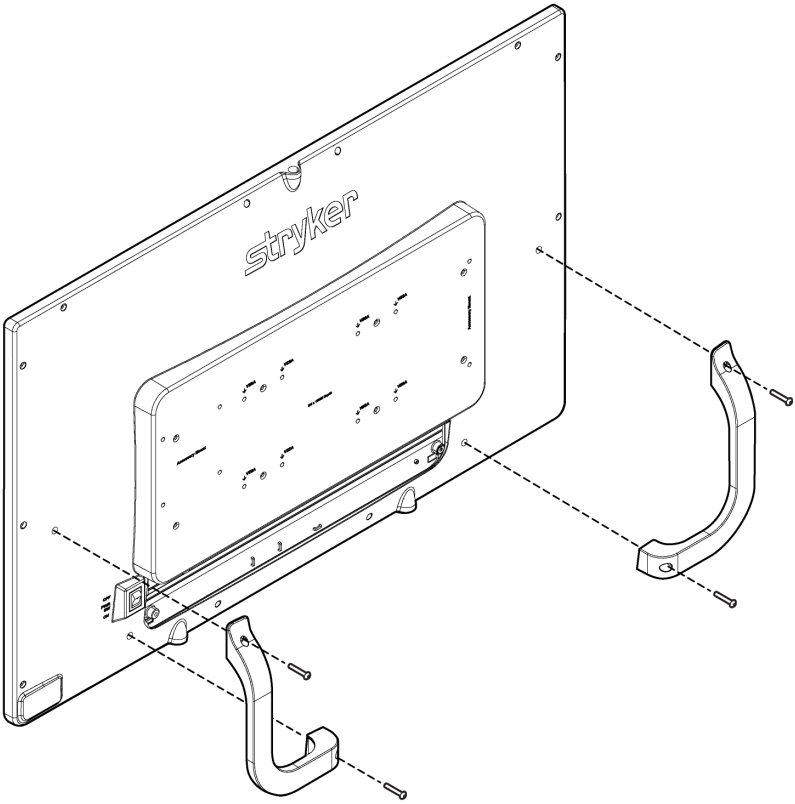

Caution: The handles are intended to aid in positioning the display, not for transporting the display. The handles should not bear the full weight of the display.

Removing the Display Handles

1. Using a Torx T10, loosen the two M3x14mm screws and gently pull the handle away from the display.

Installing the Display Handles

1. Align the handle with the screw holes on the rear of the display.
2. Using a Torx T10, install the two M3x14mm screws to attach the handle.

Setup

Stryker Endoscopy considers instructional training, or inservice, an integral part of this device. Your local Stryker Endoscopy sales representative will perform at least one inservice at your convenience to help set up your device and instruct you and your staff on its operation and maintenance. To schedule an inservice, contact your local Stryker Endoscopy representative after your device has arrived.

Connections

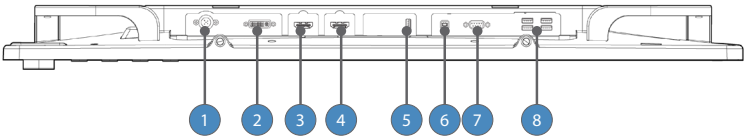

Video input and output signals are connected to the rear of the display, as illustrated above:

1. Power Connector (24V)
2. DVI
3. HDMI 4K (HDMI 2.0b)
4. HDMI 4K (HDMI 2.0b)
5. Service (for future updates)
6. SDC4K/HUB device control port
7. RS-232 communication port
8. Accessory Power (5V/1A)x4

Connector Pin Assignments

DC-Power Input Interface Connector

Pin No.	Assignment
1	Ground
2	Ground
3	+24V (DC)
4	Floating Ground
5	+24V (DC)

DVI Input Interface Connector

Pin No.	Assignment	Pin No.	Assignment
1	T.M.D.S. Data2-	13	No Connection
2	T.M.D.S. Data2+	14	+5V Power
3	T.M.D.S. Data2 Shield	15	Ground
4	No Connection	16	Hot Plug Detect
5	No Connection	17	T.M.D.S. Data0-
6	DDC Clock	18	T.M.D.S. Data0+
7	DDC Data	19	T.M.D.S. Data0 Shield
8	No Connection	20	No Connection
9	T.M.D.S. Data1-	21	No Connection
10	T.M.D.S.Data1+	22	T.M.D.S. Clock Shield
11	T.M.D.S. Data1 Shield	23	T.M.D.S. Clock+
12	No Connection	24	T.M.D.S. Clock-

HDMI Input Interface Connector

Pin No.	Assignment	Pin No.	Assignment
1	T.M.D.S. Data2+	11	T.M.D.S. Clock Shield
2	T.M.D.S. Data2 Shield	12	T.M.D.S. Clock-
3	T.M.D.S. Data2-	13	CEC
4	T.M.D.S. Data1+	14	Reserved
5	T.M.D.S. Data1 Shield	15	SCL
6	T.M.D.S. Data1-	16	SDA
7	T.M.D.S. Data0+	17	Ground
8	T.M.D.S. Data0 Shield	18	+5V
9	T.M.D.S. Data0-	19	HPD
10	T.M.D.S. Clock+		

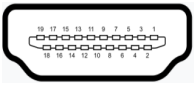

USB-B Type Input Interface Connector

Pin No.	Assignment
1	No Connection
2	TXD (Monitor > SDC4K/HUB)
3	RXD (SDC4K/HUB > Monitor)
4	Ground

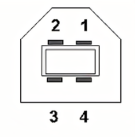

RS-232 Input Interface Connector

Pin No.	Assignment
1	No Connection
2	RXD (PC > Monitor)
3	TXD (Monitor > PC)
4	No Connection
5	Ground
6	No Connection
7	No Connection
8	No Connection
9	No Connection

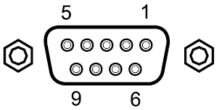

Connecting the Power Supply

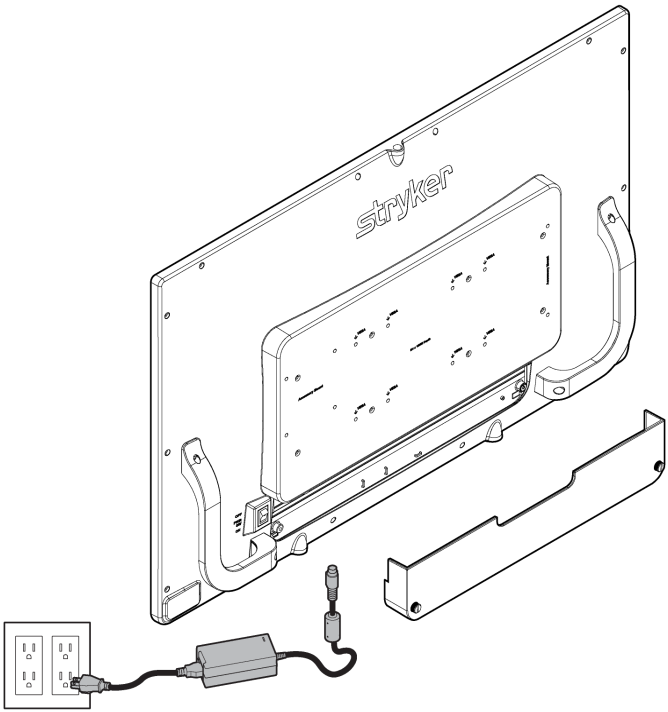

1. Remove the cable cover.
2. Connect the power supply to the 24V input on the display.
3. Connect the AC power cord to the power supply*.
4. Connect the AC power, using the supplied hospital-grade power cord.
5. (Optional, not shown) Connect a DC extension cord (15 ft./4.6 m Part Number 0240030951; 75 ft./22.8 m Part Number 0240030952) between the power supply and display.
6. Install cable cover.

* Power supply information: Model Number: BPM150S24F11, Manufacturer: BridgePower Corp.

Basic Video Setup

The following video setup is intended as an example of how the display may be integrated with additional video components.

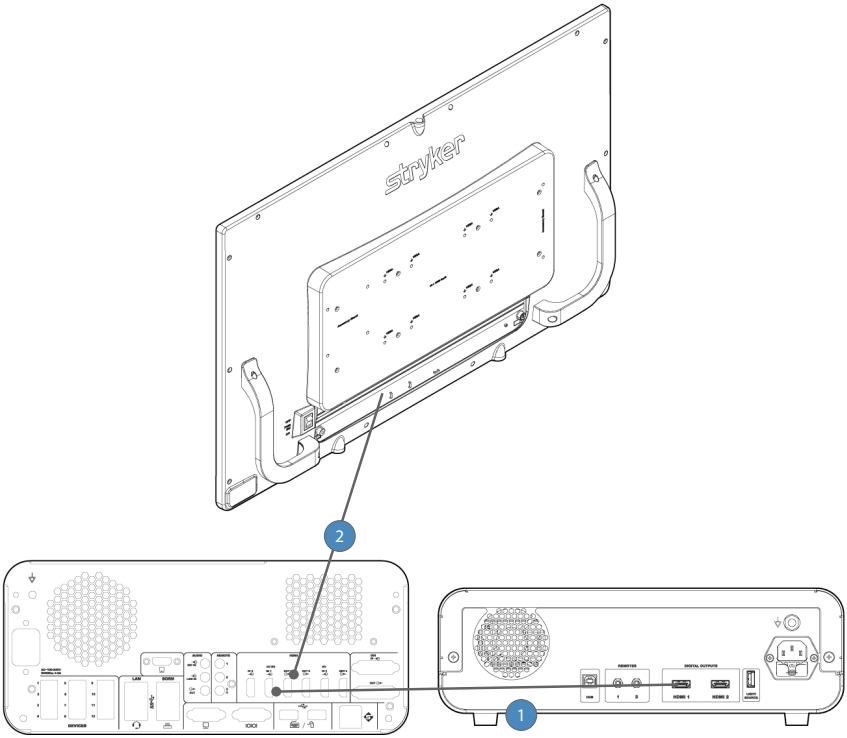

1. Route the video output 1 from the camera to the (optional) Connected OR Hub HDMI input.
2. Route the video output 1 from the (optional) Connected OR HUB HDMI output to the HDMI 4K input on the display.

Note: The HDMI cable can be connected directly from camera to display if the HUB is not present.

Note: Stryker recommends a backup connection directly from the camera to the display.

Operation

Operate the display using the rotary control and the four buttons located on the front panel. A list of the display controls and their functions is provided below.

On-Screen Display (OSD)

Accessing the On-Screen Display

To use the four front-panel buttons:

1. **PIP:** Press to activate Picture Mode (Picture in Picture, Picture by Picture)
2. **Bright**: Press to activate the Brightness adjustment menu.
3. **Specialty**: Press to activate the Specialty selection menu.
4. **Input**: Press to activate the Input selection menu.

Note: Press and hold any of the four front-panel buttons to exit the OSD menu.

5. Use the Rotary Control knob to navigate the on-screen menus once they are activated:
   - **Push** — Accesses/selects on-screen display menu.
   - **Turn Right/Left** — With the on-screen display menu activated, turning increases/decreases the value of the selected parameter.
   - **Push and Hold** — Exits on-screen display menu.

Operating On-Screen Display

The device OSD helps navigate through various device menus.

1. Press the Rotary Control knob to activate the OSD menu.
2. Rotate the Rotary Control knob to move up or down through the menu. The parameter is highlighted when selected.
3. Press the Rotary Control knob to enter the next level OSD.
4. Rotate the Rotary Control knob to increase or decrease the value of the selected parameter, or to make a selection on different options.
5. To exit the OSD menu screen from the second or third level OSD menu, select the back arrow icon. To completely exit the OSD, press and hold the Rotary Control. If no keys are pressed, the OSD will automatically exit after the factory-set predetermined time (the time is customizable).

OSD Menus

Specialty

Menu Item	Description	Range
Color	Choose between color profiles. Color and gamma adjustment are available on each profile except PACS and Norm.	STANDARD, ARTHRO A, ARTHRO B, LAP A, LAP B, ENV, ENT, PACS, NORM or GYN
Red	Red balance	-128 – 127
Green	Green balance	-128 – 127
Blue	Blue balance	-128 – 127
Gamma	Gamma value	1.0 – 2.5, S0 - S8
Saturation	Increase or decrease the color of saturation.	0 – 100
Color Space	Adjustment of color gamut	Native, BT.2020
Enhancement	Color adjustment to enhance sharpness	Off, Low, Med, High

Brightness Settings

Menu Item	Description	Range
Brightness	Increase or decrease the brightness.	0 – 100
Contrast	Increase or decrease the contrast.	0 – 100
Image Sharpness	Set image sharpness.	1 – 10

Image Effect

Menu Item	Description
Scale Mode	Choose scale mode between Fill All, Fill To Aspect, Fill All to Aspect, One To One, V-Fill or H-Fill.
Freeze Frame	Enable or disable the freeze frame.
Mirror	Enable or disable the mirror function.
PIP	Enable PIP (picture in picture) function.
PBP	Enable PBP (picture by picture) function.
Rotate	Set orientation of image. Range: Normal, 90, 180, and 270°
Zoom	Digitally zooms in on image. Range: 0 to 10

Advanced Settings

Menu Item	Description
Key Lock	Key lock on: Disables all key functions (except Specialty and Inputs selection)
Auto Source Select	Scans inputs until an active video source is detected. Auto Source Select is disabled during PIP/PBP mode.
Sleep After	0 min: The display enters sleep mode if no active video source is detected. Never : The display will not enter sleep mode. Timer: Set the time until the display enters sleep mode: 30 or 60 minutes
OSD Control	Controls OSD (On Screen Display) Menu Position, Background, and Timeout
Restore Factory Settings	Sets to factory default
Com Port	Selects which port to use for communications. SDC4K/HUB: Device control Select RS-232: SPI router control
Converter power	ON: Enables power to converter through HDMI port
	OFF: Disables power to converter through HDMI port
Timing Table	Enable: Default signal detection and display output Disable: Recommended for detecting signal in iSuite setups

Information

Menu Item	Description
Display Name Entry	Enter custom name to be displayed in screen saver mode
Serial Number	Display device serial number
Runtime	Display device total run time
Input	Display current input format
Resolution	Display detected input resolution
Color Format	Display current color format (RGB or YCbCr)

Note: Actual on-screen display values may vary with updated version of the firmware and user settings.

Troubleshooting

Before returning your display for service, consult the troubleshooting list below:

Problem	Current Status	Remedy
No picture	Power LED on	Using the OSD Menu, increase the brightness and contrast or reset them to their default settings.
		Check the power supply functionality.
	Power LED off	Ensure the power switch at the rear of the display is set to ON.
		Check if the AC power cord is properly connected to the AC adapter and outlet.
		Check that the power supply is fully connected and functioning properly.
	Power LED blinking	Display is in sleep mode. Connect active sources or press the rotary control knob or any quick key to wake the display.
	Converters not powering on	Check that the converter power setting is ON in the OSD menu.
		Turn the hard power switch off and on again.
Abnormal picture	Oversized, undersized or missing video	Adjust Scale Mode or Zoom settings.
		Wait a few seconds after initial sync of video signals, or turn the hard power switch off and on again.
OSD Error message	Resolution not supported	Set the Timing Table in the OSD menu to Disable.
		Turn the hard power switch off and on again.

Cleaning and Maintenance

Warning	To avoid electric shock and potentially fatal injury, unplug the display and power supply from the electrical outlet before cleaning.

Caution	• Do not spray cleaning liquid directly onto the display or the power supply as product damage may result. Spray on the cloth before wiping the unit. • Do not immerse the display or power supply in any liquid as product damage will result. • Do not use corrosive cleaning solutions to clean the display or power supply as product damage may result. • Do not sterilize the display or power supply as product damage may result.

General Recommendations

- Keep the display clean to prolong its operational lifetime
- OLED panel performance may deteriorate over time. Ensure that the image output is acceptable.
- Periodically check the tightness of the VESA mount screws. If not sufficiently tight, the display may detach from the arm, which may result in injury or equipment damage.

Cleaning

Note: Take extra care when cleaning the display screen. Excess liquid that enters the display housing, connectors, or controls may result in product damage.

Note: User shall decontaminate (e.g. clean, disinfect as appropriate) all potentially contaminated devices prior to returning them Stryker.

To clean the display

1. Clean and disinfect the display using a germicidal disposable wipe (or equivalent combination of germicidal spray and sterile cloth) according to the manufacturer's instructions.[1]
2. Visually inspect the external surface of the display for cleanliness, focusing on hard-to-reach areas. If visible soil remains, repeat cleaning and disinfection until all visible soil is removed.

[1] Cleaning and disinfection were validated using PDI® Super Sani-Cloth® Germicidal Disposable Wipes.

Preventive Maintenance

With the display disconnected from mains perform the following periodical check:

- Check the integrity of the power cord and inspect its routing, so that it is not under the risk of being punched or cut.
- Clean the area around the power plug, dust and liquids may result in fire.
- Clean the ventilation slot of the display, dust can obstruct the air flow and cause temperature increase of the electronics.

Inspection

Inspect the device on a continual basis for unacceptable deterioration such as (but not limited to) corrosion, discoloration, pitting, cracked seals, or abnormal noises. If a problem is observed or suspected, the device should be returned for service.

Electrical Safety Testing

Testing of ground protective earthing from the display is not necessary. Protective earthing is assured by the certified external power supply.

Adverse Event Reporting

Any serious incident that has occurred in relation to this device should be reported to Stryker and, in the European Union, to the competent authority of the Member State in which the affected person resides.

Storage

Never store the device in a non-ventilated, humid environment. This can damage the delicate electronics in the device.

Service Life

The device's service life is largely determined by wear, processing methods, and any damage resulting from use. To extend the time between device servicing, always follow the care and handling instructions in this user manual.

Before each use, test the device functionality and inspect it for any sign of damage per the Inspection section. If the device does not properly function or appears to be damaged, return it to Stryker for evaluation and possible repair or replacement. Repairs through Stryker as the equipment manufacturer bring the device back to manufacturer specifications. Clean and (when applicable) sterilize all potentially contaminated devices before returning them to Stryker.

Disposal

In accordance with European Directive 2012/19/EU on Waste Electrical and Electronic Equipment (WEEE) as amended, product should be collected separately for recycling. Do not dispose of as unsorted municipal waste. Contact local distributor for disposal information. Ensure infected equipment is decontaminated prior to recycling.

Product Recycling Information

32" 4K OLED Surgical Display

REF 0240031300

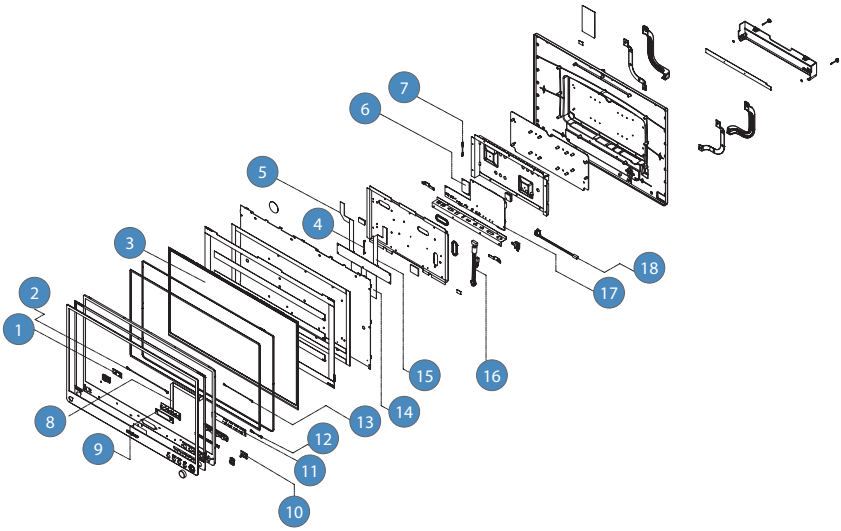

Item	Description	Qty	Type	Item	Description	Qty	Type
1	POWER SWITCH	1	Circuit Board	10	ROTARY SW	1	Circuit Board
2	POWER SW TO LOGO LIGHT HARNESS	1	Circuit Board	11	QUICK KEY	1	Circuit Board
3	PANEL ASSY	1	Circuit Board	12	QUICK KEY TO ROTARY SW HARNESS	1	Circuit Board
4	T-CON TO DMB100 MAIN eDP	1	Circuit Board	13	LOGO LIGHT TO QUICK KEY HARNESS	1	Circuit Board
5	PANEL T-CON FFC 40 P-R	1	Cable	14	PANEL T-CON FFC 100P	1	Cable
6	DCM100	1	Circuit Board	15	PANEL T-CON FFC 40P-L	1	Cable
7	DMB100 TO DCM100 HARNESS	1	Circuit Board	16	SL150M TO GND 7 DMB100 HARNESS	1	Circuit Board
8	DMB TO LOGO LIGHT FFC	1	Circuit Board	17	DMB100 MAIN	1	Circuit Board
9	LOGO LIGHT	1	Circuit Board	18	MAIN TO PANEL LED DRIVER CABLE	1	Circuit Board

Technical Specifications

General Description

Item		Description	
OLED Panel	**Description**	31.5" (800.1 mm) diagonal	
	Native Resolution	3840 (H) dots x 2160 (V) lines	
	Display colors	10-bit	
	Pixel Pitch	0.1818 mm x 0.1818 mm	
	Response time (typical)	0.1 ms Black to White	
	Viewing Angle	Horizontal/Vertical: 178°	
Brightness and Contrast	**Brightness**	540 nits (peak), 250 nits (raster)	
	Contrast	1,000,000:1	
Input/ Output		**Input**	**Output**
		1 x DVI 2 x HDMI 4K (HDMI 2.0b) 1 x RS-232 (SPI router control) 1 x SDC4K/HUB device control interface (USB-B)	4 x USB-A (5 V, 1A power only; not used for data transfer)
Temperature	**Operating**	50° to 104° F (10° to 40° C)	
	Transport and Storage	0° to 140° F (-18° to 60° C)	
Relative Humidity	**Operating**	15 to 75%	
	Transport and Storage	15 to 90%	
Electrical	**Power Adapter**	Input: 100 – 240 VAC; 50 – 60 Hz; 2.5 A Output: 24 V DC; 6.25 A (150 W Max) Model Number: BPM150S24F11	
	Power Consumption	20 – 115.2 Watts Marked Rating: 24V DC; 4.8A	
Altitude		Up to 3000 m	
Impact Resistance		IK06 (Front): Protected against 1 joule of impact. The equivalent to the impact of a 0.5 kg mass dropped from 20 cm above the impacted surface.	
Ingress Protection (Dust and Liquid)		IP55 (Front): Protected against quantity of dust that could interfere with the normal operation of the product but is not fully dust tight. The product is completely protected against solid objects. It is also protected against water jets projected by a nozzle (6.3 mm) from any angle. IP43 (Rear): Protected from tools and small wires greater than 1mm, protection from ingress of spraying water (less than 60° from vertical).	

Item		Description
Current/ Voltage Rating	**110V ± 10V power outlets**	Select a power supply cord that is UL Listed and C.S.A Certified, type SJT or SVT, 3 – conductor, 18 AWG, terminated in a molded on hospital grade plug cap rated 110V ± 10 V, 15A, with a minimum length of six feet.
	220V ± 20V power outlets	Select a power supply cord that is internationally harmonized and marked "<HAR>", 3 – conductor, 0.75 mm^2 minimum wire, rated 220V ± 20V, 10A with a PVC insulated jacket. The cord must have a molded on plug cap rated 220V ± 20V, 10A. The cord and plug cap must be suitable for medical use.
Display Weight with Cable Cover (approximate)		15.6 lbs
Display Weight without Cable Cover (approximate)		15.3 lbs
Power Supply Weight		1.75 lbs
Unit Dimensions (W x H x D)		28.7 x 18.3 x 2.1 in (729.7 x 465 x 53.2 mm)
VESA Mounting Interface Dimensions		VESA 100 x 100 mm
		VESA 100 x 200 mm
Accessory Mounting Interface Dimensions		(x2) M4x16mm (118.4mm vertically spaced) (x4) M4x 16mm (75x75mm VESA pattern) (x1) 1/4"-20 Nut (top) (x2) 1/4"-20 Nut (Bottom)

Classification and Approvals

Class 1 Equipment

Medical equipment with respect to electric shock, fire, and mechanical hazards only in accordance with ANSI/AAMI ES60601-1 and CAN/CSA C22.2 No. 60601.1.

IP43: Protected from tools and small wires greater than 1mm, protection from ingress of spraying water (less than 60° from vertical)

Continuous Operation

Compliance

FCC Regulations: FCC Part 15 Class B

FCC Identifier: THCDTMM3150A

Canadian Notice: CAN ICES-3 (B)/NMB-3(B)

CE medical device class I

Note: Please contact your local Stryker Endoscopy sales representative for information on changes and new products.

Electromagnetic Compatibility

Like other electrical medical equipment, the 32" 4K OLED Surgical Display requires special precautions to ensure electromagnetic compatibility (EMC) with other electrical medical devices. To ensure electromagnetic compatibility, the display must be installed and operated according to the EMC information provided in this manual. The display has been designed and tested to comply with IEC 60601-1-2 requirements for EMC with other devices.

Warning	When this device is connected with other electrical equipment, leakage currents may be additive. To minimize total leakage current per patient, ensure that all systems are installed according to the requirements of IEC 60601-1.

Caution	• Portable and mobile RF communications equipment may affect the normal function of the display. • Do not use cables or accessories other than those provided with the display, as this may result in increased electromagnetic emissions or decreased immunity to such emissions. • If the display is used adjacent to or stacked with other equipment, observe and verify normal operation of the display in the configuration in which it will be used prior to using it in a surgical procedure. Consult the tables below for guidance in placing the display.

Guidance and Manufacturer's Declaration: Electromagnetic Emissions		
The 32" 4K OLED Surgical Display is intended for use in the electromagnetic environment specified below. The customer or the user of the display should ensure it is used in such an environment.		
Emissions test	**Compliance**	**Electromagnetic environment - guidance**
RF emissions CISPR 11	Group 1	The display use RF energy only for their internal function; therefore, their RF emissions are very low and are not likely to cause any interference in nearby electronic equipment.
RF emissions CISPR 11	Class B	The display is suitable for use in all establishments other than domestic establishments and those directly connected to the public low-voltage power supply network that supplies buildings used for domestic purposes, provided the following warning is heeded: Warning: This system is intended for use by health care professionals only. This system may cause radio interference or may disrupt the operation of nearby equipment. It may be necessary to take mitigation measures, such as reorienting or relocating the system or shielding the location.
Harmonic emissions IEC 61000-3-2	Class A	
Voltage Fluctuations/ flicker emissions IEC 61000-3-3	Complies	

Guidance and Manufacturer's Declaration: Electromagnetic Immunity			
The 32" 4K OLED Surgical Display is intended for use in the electromagnetic environment specified below. The customer or the user of the display should ensure that it is used in such an environment.			
Immunity Test	**IEC 60601 Test Level**	**Compliance Level**	**Electromagnetic Environment Guidance**
Electrostatic Discharge (ESD) IEC 61000-4-2	± 8 kV contact ± 15 kV air	± 8 kV contact ± 15 kV air	Floors should be wood, concrete, or ceramic tile. If floors are covered with synthetic material, the relative humidity should be at least 30 %.
Electrical fast transient/burst IEC 61000-4-4	± 2 kV (input a.c. power port) ± 1 kV (signal ports)	± 2 kV (input a.c. power port) ± 1 kV (signal ports)	Mains power quality should be that of a typical commercial or hospital environment.
Surge IEC 61000-4-5	(± 0.5, ± 1, ± 2) kV; line to earth (± 0.5, ± 1) kV; line to line	(± 0.5, ± 1, ± 2) kV; line to earth (± 0.5, ± 1) kV; line to line	Mains power quality should be that of a typical commercial or hospital environment
Voltage dips and interruptions IEC 61000-4-11	0% UT 0.5 cycle 0% UT 1 cycle 70% UT 25 cycles 0% UT 5 Sec Supplementary information: If the Rated voltage range <25% of the lowest rated input voltage, one rated input voltage. Otherwise, minimum and maximum rated voltage. EUT powered at one of the Nominal input frequencies. ME EQUIPMENT and ME SYSTEMS with power input voltage selection by transformer taps shall be tested at only one tap setting.	0% UT 0.5 cycle 0% UT 1 cycle 70% UT 25 cycles 0% UT 5 Sec Supplementary information: If the Rated voltage range <25% of the lowest rated input voltage, one rated input voltage. Otherwise, minimum and maximum rated voltage. EUT powered at one of the Nominal input frequencies. ME EQUIPMENT and ME SYSTEMS with power input voltage selection by transformer taps shall be tested at only one tap setting.	Mains power quality should be that of a typical commercial or hospital environment. If the user of the transmitter requires continued operation during power mains interruptions, it is recommended that the Wireless Transmitter be powered from an uninterruptible power supply or a battery.
Power frequency (50/60 Hz) magnetic field IEC 61000-4-8	30 A/m	30 A/m	Power-frequency magnetic fields should be at levels characteristic of a typical location in a typical commercial or hospital environment.
Note: UT is the AC mains voltage prior to application of the test level.			

Guidance and Manufacturer's Declaration: Electromagnetic Immunity			
The 32" 4K OLED Surgical Display is intended for use in the electromagnetic environment specified below. The customer or the user of the display should ensure that it is used in such an environment.			
Immunity Test	**IEC 60601 Test level**	**Compliance Level**	**Electromagnetic Environment - Guidance**
Conducted RF IEC 61000-4-6 Radiated RF IEC 61000-4-3	3 Vrms 10 V/m 80MHz to 2.7 GHz	3 Vrms 10 V/m 80MHz to 2.7 GHz	Portable and mobile RF communications equipment should be used no closer to any part of the display, including their cables, than the recommended separation distance calculated from the equation applicable to the frequency of the transmitter. Recommended Separation Distance: d = 2vP 80 MHz to 2.7 GHz where P is the maximum output power rating of the transmitter in watts (W) according to the transmitter manufacturer and d is the recommended separation distance in meters (m). Field strengths from fixed RF transmitters, as determined by an electromagnetic site survey (a), should be less than the compliance level in each frequency range(b). Interference may occur in the vicinity of equipment marked with the following symbol:
(a) Field strengths from fixed transmitters, such as base stations for radio (cellular/cordless) telephones and land mobile radios, amateur radio, AM and FM radio broadcast, and TV broadcast, cannot be predicted theoretically with accuracy. To assess the electromagnetic environment due to fixed RF transmitters, an electromagnetic site survey should be considered. If the measured field strength in the location in which the 32" 4K OLED Surgical Display is used exceeds the applicable RF compliance level above, the display and transmitter should be observed to verify normal operation. If abnormal performance is observed, additional measures may be necessary, such as reorienting or relocating the display. (b) Over the frequency range 150 kHz to 80 MHz, field strengths should be less than 3 V/m.			

Guidance and Manufacturer's Declaration: Electromagnetic Immunity					
Test frequency (MHz)	**Band (MHz)**	**Service**	**Modulation**	**Maximum power (W)**	**Immunity test level (V/m)**
385	380-390	TETRA 400	Pulse modulation 18 Hz	1.8	27
450	430-470	GMRS 460, FRS 460	FM ± 5 kHz deviation 1 kHz sine	2	28
710	704 - 787	LTE Band 13, 17	Pulse modulation 217 Hz	0.2	9
745					
780					
810	800-960	GSM 800/900, TETRA 800, iDEN 820, CDMA 850, LTE Band 5	Pulse modulation 18 Hz	2	28
870					
930					
1720	1700-1990	GSM 1800; CDMA 1900; GSM 1900; DECT; LTE Band 1, 3, 4, 25; UMTS	Pulse modulation 217 Hz	2	28
1845					
1970					
2450	2400-2570	Bluetooth, WLAN, 802.11 b/g/n, RFID 2450, LTE Band 7	Pulse modulation 217 Hz	2	28
5240	5100-5800	WLAN 802.11 a/n	Pulse modulation 217 Hz	0.2	9
5500					
5785					
Note: Portable RF Communication equipment should be used no closer than 30cm to 32" 4K OLED Surgical Display. Otherwise, degradation of the performance of this equipment could result.					

Symbols and Definitions

The following symbols appear on the product, its labeling, or the product packaging. Each symbol carries a special definition, as defined below:

Device/Package Labeling

	Consult instructions for use
Rx ONLY	Federal law (USA) restricts this device to use by, or on order of, a physician
	Date of manufacture
	Legal manufacturer
REF	Product catalog number
SN	Product serial number
QTY	Quantity
Made in Korea	Country of Origin
CE	The device meets European Union medical device requirements.
MD	Medical device in the European Union
EC REP	Authorized representative in the European Community
UDI	Unique Device Identification
	Do Not Get Device Wet
3	Maximum Stacking
	Fragile
	This Side Up
	No Serviceable Parts
	Direct Current

DC Power Control Switch

For Indoor Use Only

Efficiency Level

Japan PSE Mark Denan

UI, Functional Safety Recognized Component

China Compulsory Certificate Mark

IP43

Enclosure provides protection against:

- Protected from tools and small wires greater than 1mm
- Spraying water (less than 60° from vertical)

Medical Equipment is in accordance with ANSI/AAMI ES60601-1 (2005) + AMD 1 (2012) and CAN/CSA-C22.2 No. 60601-1 (2014) in regards to electric shock, fire hazards, and mechanical hazards.

Device recycling code (applicable in China)

This product contains electrical waste or electronic equipment. It must not be disposed of as unsorted municipal waste and must be collected separately.

User Manual

Caution (consult instructions for use)

Radiation emitting

Produced for:
Stryker Endoscopy
5900 Optical Court
San Jose, CA 95138 USA
1-800-624-4422
U.S. Patents: www.stryker.com/patents

EC REP
Stryker European Operations Limited
Anngrove, IDA Business & Technology Park
Carrigtwohill, Co Cork
T45 HX08 lreland

Stryker or its divisions or other corporate affiliated entities own, use or have applied for the following trademarks or service marks: the **Stryker logo.** All other trademarks are trademarks of their respective owners or holders.

P51406 A
2022/08