User Manual

Titration Excellence

T5/T7/T9

METTLER TOLEDO

Table of Contents

1 Introduction 3

2 Safety information 4
2.1 Definition of signal words and warning symbols 4
2.2 Product-specific safety notes 4

3 Design and Function 6
3.1 Instrument 6
3.1.1 Overview titrator 6
3.1.2 StatusLight 6
3.1.3 Terminal 7
3.1.4 Titrator rear panel connections 8
3.2 User Interface 10
3.2.1 Home screen 10
3.2.2 Keypads 11
3.2.3 Menu structure 11

4 Installation 12
4.1 Standard equipment 13
4.1.1 Scope of delivery 13
4.1.2 Unpack the titrator 15
4.1.3 Position the titrator 15
4.1.4 Adjust the angle of the terminal 16
4.1.5 Connect and disconnect the terminal 16
4.1.6 Connect the titrator to the power supply 16
4.1.7 Disconnect the titrator from the power supply 17
4.1.8 Set up the titrator for a general titration 18
4.1.8.1 Attach the titration stand to the titrator 19
4.1.8.2 Swivel the titration stand 19
4.1.8.3 Attaching and removing the titration vessel 20
4.1.8.4 Recommended positions for sensors, tubes and stirrers 20
4.1.8.5 Connect the compact stirrer 20
4.1.8.6 Connect the measuring electrode 21
4.1.8.7 Attaching the electrode arm 21
4.1.8.8 Insert and connect a burette 21
4.1.9 Connect a Rondolino TTL sample changer 22

5 Operating the instrument 22
5.1 Start up the titrator and shut down the titrator 22
5.2 Running a general titration 23
5.2.1 Preparation 23
5.2.2 Rinsing and filling the burette 24
5.2.3 Calibrating and testing the sensor 24
5.2.3.1 Calibrate the sensor 24
5.2.3.2 Test the pH-sensor 25
5.2.4 Determining the titer 25
5.2.5 Run an EQP titration 26
5.2.5.1 Prepare the sample 26
5.2.5.2 Configure the method 26
5.2.5.3 Create an indirect shortcut 26
5.2.5.4 Perform the analysis 26
5.3 Stopping Methods 27
5.3.1 Suspending or stopping an ongoing analysis (GT or BI) by the user 27

6 Transporting the titrator 28

7 Care and maintenance 28
7.1 Cleaning 28
7.2 Maintenance 29

8 Disposal 29

9 Technical data 30
9.1 Titrator 30
9.2 Terminal 30

1 Introduction

Thank you for choosing a METTLER TOLEDO Titration Excellence titrator. Titration Excellence titrators are easy-to-operate instruments for titrations.

About this document

This document provides you with the information you need to get started with your METTLER TOLEDO titrator.

For a comprehensive description of the instrument and its functions, refer to the Operating Instructions, supplied as PDF file on the CD.

The instructions in this document refer to titrators running firmware version 5.2.0 or higher.

If you have any additional questions, contact your authorized METTLER TOLEDO dealer or service representative.

▶ www.mt.com/contact

Conventions and symbols

Refers to an external document.

Note for useful information about the product.

Elements of instructions

- Prerequisites

1 Steps

2 …

  ⇨ Intermediate results

⇨ Results

2 Safety information

- Read and understand the information in this User Manual before you use the instrument.
- Keep this User Manual for future reference.
- Include this User Manual if you pass on the instrument to other parties.

If the instrument is not used according to the information in the Operating Instructions or if it is modified, the safety of the instrument may be impaired and Mettler-Toledo GmbH assumes no liability.

For a comprehensive description of the instrument and its functions, refer to the Operating Instructions, supplied as PDF file on the CD.

2.1 Definition of signal words and warning symbols

Safety notes are marked with signal words and warning symbols. These show safety issues and warnings. Ignoring the safety notes may lead to personal injury, damage to the instrument, malfunctions and false results.

Signal words

WARNING	for a hazardous situation with medium risk, possibly resulting in death or severe injury if not avoided.
CAUTION	for a hazardous situation with low risk, resulting in minor or moderate injury if not avoided.
NOTICE	for a hazardous situation with low risk, resulting in damage to the instrument, other material damage, malfunctions and erroneous results, or loss of data.

Warning symbols

Electrical shock

Hot surface

2.2 Product-specific safety notes

Intended use

This instrument is designed to be used in laboratories by trained staff. The instrument is suitable for the processing of reagents and solvents.

Any other type of use and operation beyond the limits of technical specifications without written consent from Mettler-Toledo GmbH is considered as not intended.

This device complies with Industry Canada licence-exempt RSS standard(s) and part 15 of the FCC Rules. Operation is subject to the following two conditions: (1) this device may not cause interference, and (2) this device must accept any interference, including interference that may cause undesired operation of the device. Changes or modifications not expressly approved by the party responsible for compliance could void the user's authority to operate the equipment.

Responsibilities of the instrument owner

The instrument owner is the person that uses the instrument for commercial use or places the instrument at the disposal of the staff. The instrument owner is responsible for product safety and the safety of staff, users and third parties.

METTLER TOLEDO assume that the instrument owner provides the necessary protective gear, appropriate training for the daily work and for dealing with potential hazards in their laboratory.

⚠ WARNING

Danger of death or serious injury due to electric shock!

Contact with parts that contain a live current can lead to injury and death.

1 Only use a METTLER TOLEDO power cable and AC adapter designed for your instrument.
2 Connect the power cable to a grounded power outlet.
3 Keep all electrical cables and connections away from liquids.
4 Replace damaged power cables and AC adapters immediately.

⚠ CAUTION

Danger of burns due to hot surfaces!

Parts of the cover of the coulometer board can reach temperatures that cause injuries if touched.

– Do not touch the place marked with the warning symbol.

NOTICE

Danger of damaging the touch screen with pointed or sharp objects!

Pressing on the touch screen with pointed or sharp objects may damage it.

– Operate the touch screen by applying gentle pressure with the pad of your finger.

NOTICE

Danger of damage to the instrument due to incorrect parts!

Using incorrect parts with the instrument can damage the Instrument or cause the instrument to malfunction.

– Only use parts supplied with the instrument, listed accessories and spare parts from METTLER TOLEDO.

3 Design and Function

3.1 Instrument

3.1.1 Overview titrator

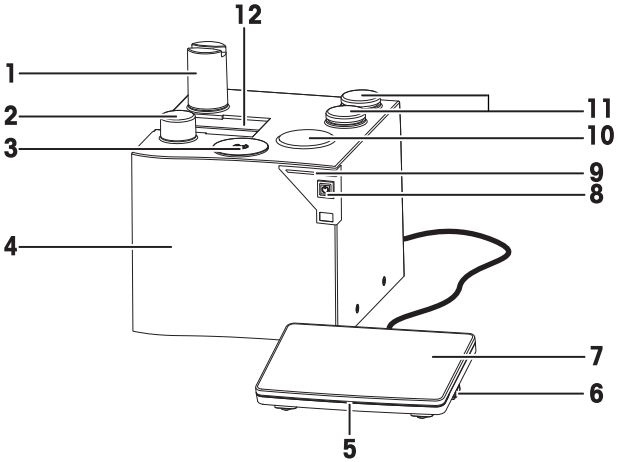

1	Burette drive	**7**	Touchscreen
2	Burette arrestment knob	**8**	Power button
3	SmartSample reader (SmartSample™)	**9**	Instrument status light (StatusLight™)
4	Instrument housing	**10**	Internal magnetic stirrer
5	Terminal status light (StatusLight™)	**11**	Mounting stations for titration stand
6	USB-connection for data transfer	**12**	Mounting rail for burettes

3.1.2 StatusLight

The StatusLight provides information about the status of the titrator.

StatusLight	Titrator status
Steady, green light	The titrator is ready for operation.
Blinking green light	The titrator is performing a task.
Steady, orange light	The titrator waits for the user to perform an action.
Blinking, orange light	The task has been interrupted, for example because a value lies outside of its limits.
Steady,red light	The titrator has an error.

3.1.3 Terminal

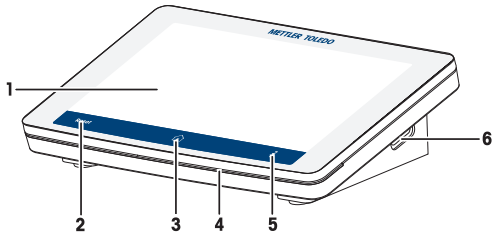

Nr.	Name	Function
1	Touch screen	Displays information and can be used to enter information.
2	**Reset** button	Ends all tasks that are currently running.
3	Home button	Returns you to the home screen from any menu position.
4	StatusLight™	Provides information about the status of the titrator.
5	Info button	Accesses the interactive online help for the content of the current dialog.
6	USB A	USB connection for data transfer

3.1.4 Titrator rear panel connections

The overview includes the connections of the main board and the optional plug-in cards.

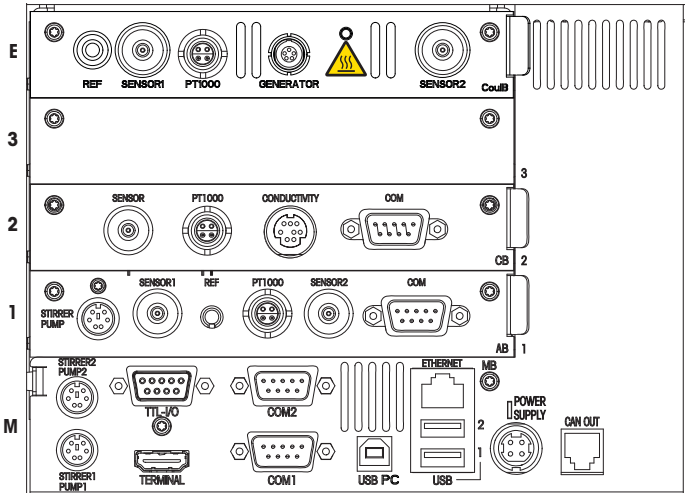

No.	Plug-in card type	Name	Use	Sensor/Device
E	Coulometer board (CoulB)*	**REF**	Reference input to **SENSOR1**	For example: DX200
		SENSOR1	Sensor types: mV, pH, ISE, phototrode	For example: DX223
		PT1000	PT1000 temperature sensor	DT1000
		GENERATOR	Generator electrode	Generator electrode with diaphragma, generator electrode without diaphragma
		Safety label for hot surfaces	Warning that the marked place can be hot enough to cause burns.	–
		SENSOR2	Sensor types: polarized, mV, pH, ISE, phototrode	For example: DM143-SC
3	Free	–	–	–
2	Conductivity board (CB)*	**SENSOR**	Sensor types: mV, pH, ISE, phototrode	For example: DGi111-SC
		PT1000	PT1000 temperature sensor	DT1000
		CONDCUTIVITY	Conductivity sensor, Thermotrode	For example: InLab® 717
		COM	Balance/auxiliary device	For example: XS analytical balance

No.	Plug-in card type	Name	Use	Sensor/Device
1	Analog board (AB) / pH board**	**STIRRER PUMP**	Stirrer/pump	For example: Compact stirrer/DV704 titration stand/SP280 pump/ OE06 output expander/ Y-cable
		SENSOR1	Sensor types: mV, pH, ISE, phototrode	For example: DX223
		REF	Reference input to **SENSOR1**	For example: DX200
		PT1000	PT1000 temperature sensor	DT1000
		SENSOR2	Sensor types: polarized, mV, pH, ISE, phototrode	For example: DM143-SC
		COM	Balance/auxiliary device	For example: XS analytical balance
M	Main board (MB)	**STIRRER1 PUMP1**	Stirrer1/Pump1	For example: Compact stirrer/DV704 titration stand/SP280 pump/ OE06 output expander/ Y-cable
		STIRRER2 PUMP2	Stirrer2/Pump2	For example: Compact stirrer/DV704 titration stand/SP280 pump/ OE06 output expander/ Y-cable
		TTL-I/O	TTL input/output/ auxiliary device	For example: T-Box/ Rondolino TTL/Stromboli
		COM1	Balance/auxiliary device	For example: Analytical Balance/TV6
		COM2	Balance/sample changer/auxiliary device	For example: Analytical Balance/TV6
		USB PC	PC	For example: LabX
		USB 1	Printer/barcode reader/ memory stick/USB hub/ autosampler	For example: InMotion Autosampler/ InMotion KF/USB-P25
		USB 2	Printer/barcode reader/ memory stick/USB hub/ autosampler	For example: InMotion Autosampler/ InMotion KF/USB-P25
		ETHERNET	Network	For example: LabX
		POWER SUPPLY	AC adapter	AC adapter
		CAN OUT	CAN connection	Dosing unit
		TERMINAL	Terminal	Terminal

* Not part of the scope of delivery

** Not part of the scope of delivery for T5C

3.2 User Interface

3.2.1 Home screen

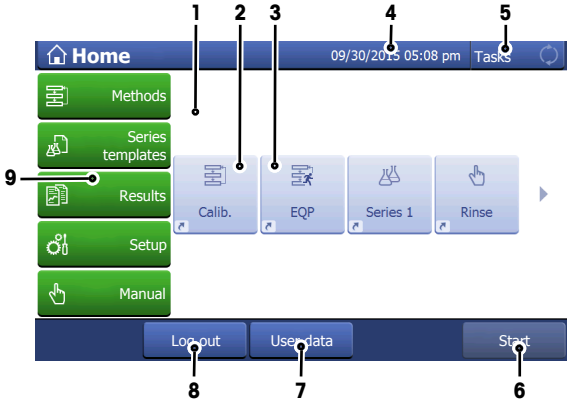

	Name	Explanation
1	**Shortcut area**	Shows indirect and direct shortcuts for frequently used methods. Shortcuts are saved in the user profile and can be defined, changed and deleted by the user.
2	**Indirect shortcut**	An indirect shortcut opens the window **Start analysis** of the method.
3	**Direct shortcut**	A direct shortcut starts the method without opening the window **Start analysis**.
4	**Status bar**	The status bar contains the current menu item, user name as well as date and time.
5	**Instrument status**	Shows the current working status of the instrument. **Blue** No measurement running **Green** Measurement running
6	**Start**	Switch to direct measurement (quick start for the defined standard measurement of this instrument).
7	**User data**	Opens a window with information about the currently logged in user.
8	**Log out**	Directly log out the current user. The window **Login** opens after logging out.
9	**Menus**	**Methods** Create and handle methods for every measurement type.
		Series templates Open the menu for series templates for every method available on the instrument.
		Results Display all measurement results, print out or export them. Visit detail information about every single result.
		Setup Define all system settings in this menu, e.g,, hardware settings, user management or user preferences. These settings are usually made during installation of the instrument.
		Manual Display the manual operations available on the instrument.

3.2.2 Keypads

Alphabetic keypad

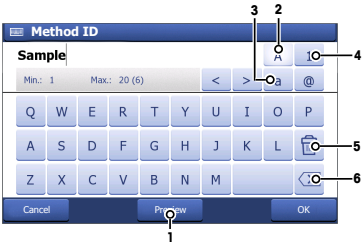

- Tap (1) to see how your input looks like.
- Tap (2) for capital letters.
- Tap (3) for lowercase letters.
- Tap (4) to switch to a numeric keypad and (2) to turn back to alphanumeric.
- Tap (5) to delete all entered letters or numbers.
- Tap (6) to delete the last entered letter or number.

Numeric keypad

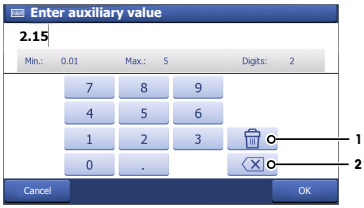

- Tap (1) to delete all entered numbers.
- Tap (2) to delete the last entered number.

3.2.3 Menu structure

Methods

The menu **Methods** has no submenus.

Series templates

The menu **Series templates** has no submenus.

Results

The menu **Results** has the following submenus.

- **All results**
- **Statistics**
- **Samples**
- **Add result**
- **Recalculate**
- **Reevaluate**
- **Buffer**
- **Undo all**

Setup

The menu **Setup** has the following submenus.

Menu level 2	Menu level 3
Chemicals	**Titrants**
	Auxiliary reagents
	Calibration standards
	Concentration and titer standards
	Substances

Menu level 2	Menu level 3
User settings	**Language**
	StatusLight
	Screen
	Audio signal
	Shortcuts
	Keyboard
Values	**Blanks**
	Auxiliary values
Hardware	**Sensors**
	Pumps
	Peripherals
	Titration Stands
	Auxiliary Instruments
	Homogenizer (only T7 and T9)
	Liquid Handler (only T7 and T9)
Global settings	**System**
	User management
	Analysis and resources behavior
	Solvent Control
Mainten. & Service	**MT-Service**
	Import / Export
	Reset to factory settings
	Titrator firmware history
	Board firmware
	Terminal
	Board data
	Drives
	Burettes
	Upgrade (only T7)
	Update
	Delete Mettler method template

Manual

The menu **Manual** has the following submenus.

- **Stirrer**
- **Sensor**
- **Burette**
- **Pump**
- **Auxiliary instrument**
- **Sample changer**
- **SmartSample**

4 Installation

Standard equipment for the titrator types varies. For this reason, installation steps may vary.

4.1 Standard equipment

4.1.1 Scope of delivery

Titrators

Part		Order number	T5	T5C	T7	T9
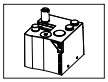	Titrator	–	•	•	•	•
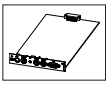	Analog board	51109818	•	–	•	•
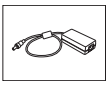	AC adapter	30298362	•	•	•	•
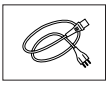	Power cable (country specific)	–	•	•	•	•
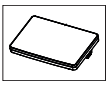	Terminal WVGA 7 inch AnaChem	–	•	•	•	•
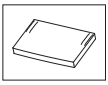	Terminal protection Cover	–	•	•	•	•
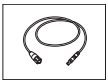	Triaxial SC LEMO cable 70 cm	89601	•	–	•	•
	USB cable A-B 180 cm	51191926	•	–	•	•
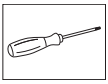	Torx screwdriver 10	51191659	•	•	•	•
	Burette DV1010 10 mL	51107501	•	–	–	–
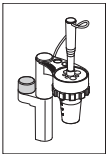	Manual titration kit • Manual titration stand, complete • Compact stirrer • Propeller stirrer • Magnetic stirrer bar • Adapter for dispensing tube • Electrode sleeve • NS 7.5 stopper (3 pcs.) • NS 14.5 stopper (4 pcs.) • Titration vessel 100 mL made from polypropylene (2 pcs.)	51109220	•	–	–	–

Part		Order number	T5	T5C	T7	T9
	CD Titration User Documentation	30297239	•	•	•	•
	User Manual	–	•	•	•	•
	Memo Card	–	•	•	•	•
	Test report	–	•	•	•	•
	EC declaration of conformity	–	•	•	•	•

Titrator bundles

Part		Order number	T5 InMotion Flex	T5 Rondolino
	Titrator	–	•	•
	Analog board	51109818	•	•
	AC adapter	30298362	•	•
	Power cable (country specific)	–	•	•
	Terminal WVGA 7 inch AnaChem	–	•	•
	Triaxial SC LEMO cable 70 cm	89601	•	•
	USB cable A-B 180 cm	51191926	•	•
	Torx screwdriver 10	51191659	•	•

Part		Order number	T5 InMotion Flex	T5 Rondolino
	Burette DV1010 10 mL	51107501	•	•
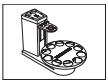	Sample changer Rondolino TTL	51108500	–	•
	Sample Changer InMotion Flex Kit 100mL	30370014	•	–
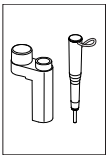	Auto titration kit • Electrode holder assembly • Compact stirrer • Propeller stirrer	51109221	•	•
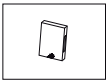	CD Titration User Documentation	30297239	•	•
	User Manual	–	•	•
	Memo Card	–	•	•
	Test report	–	•	•
	EC declaration of conformity	–	•	•

4.1.2 Unpack the titrator

1 Remove the titrator (and accessories) from the protective packing material.
2 Store the packing material for later transport over long distances.
3 Check if you received all parts listed in the scope of delivery.
4 Inspect the parts visually for flaws or damage.
5 If parts are missing or damaged, report it immediately and file a freight claim if needed.

4.1.3 Position the titrator

The instrument has been developed for indoor operation in a well-ventilated area. The following site requirements apply:

- The ambient conditions are within the limits specified in the technical data.
- No powerful vibrations
- No direct sunlight
- No corrosive gas atmosphere
- No explosive atmosphere

- No powerful electric or magnetic fields

4.1.4 Adjust the angle of the terminal

The angle of the terminal has two positions.

– To increase the angle of the terminal, fold out the two feet (1) at the underside of the terminal.

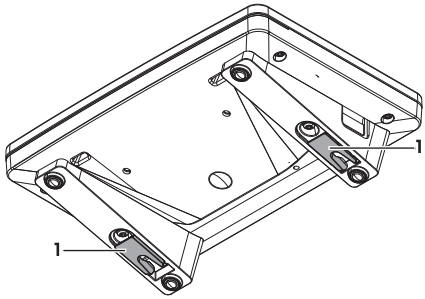

4.1.5 Connect and disconnect the terminal

Connect the terminal

- The titrator has shut down.

1 Plug the supplied terminal cable into the socket in the back of the terminal.

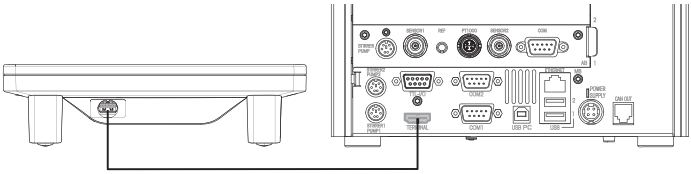

2 Plug the terminal cable into the **TERMINAL** socket on the rear panel of the titrator.

3 Start up the titrator.

⇨ The titrator automatically detects the terminal and activates it.

Disconnect the terminal

- The titrator has shut down.

1 Remove the terminal cable from the socket in the back of the terminal.

2 Remove the terminal cable from the **TERMINAL** socket on the rear panel of the titrator.

4.1.6 Connect the titrator to the power supply

⚠ WARNING

Danger of death or serious injury due to electric shock!

Contact with parts that contain a live current can lead to injury and death.

1 Only use a METTLER TOLEDO power cable and AC adapter designed for your instrument.

2 Connect the power cable to a grounded power outlet.

3 Keep all electrical cables and connections away from liquids.

4 Replace damaged power cables and AC adapters immediately.

NOTICE

Danger of damage to the AC adapter due to overheating!

If the AC adapter is covered or in a container, it is not sufficiently cooled and overheats.

1 Do not cover the AC adapter.

2 Do not put the AC adapter in a container.

The titrator is operated using an AC adapter. The AC adapter is suitable for all supply line voltages ranging from 100...240 V AC ±10 % and 50-60 Hz.

1 Install the cables in such a way that they cannot be damaged or interfere with operation.

2 Insert the plug of the power cable in the socket of the AC adapter.

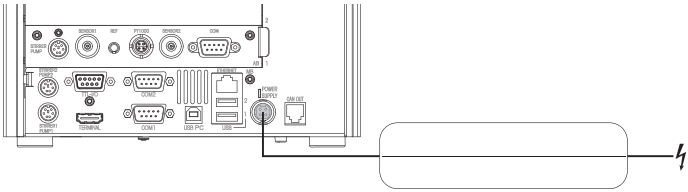

3 Insert the plug of the AC adapter in the **POWER SUPPLY** socket at the back of the titrator.

4 Insert the plug of the power cable in a grounded power outlet that is easily accessible.

4.1.7 Disconnect the titrator from the power supply

- The titrator has shut down.

1 Pull the plug of the power cable out of the power outlet.

2 Pull the plug of the AC adapter out of the **POWER SUPPLY** socket at the back of the titrator.

4.1.8 Set up the titrator for a general titration

The illustration shows the setup of an Excellence Titrator for a general titration. For this setup you need a titrator, and the accessories "Manual titration kit" and "Interchangeable burette set."

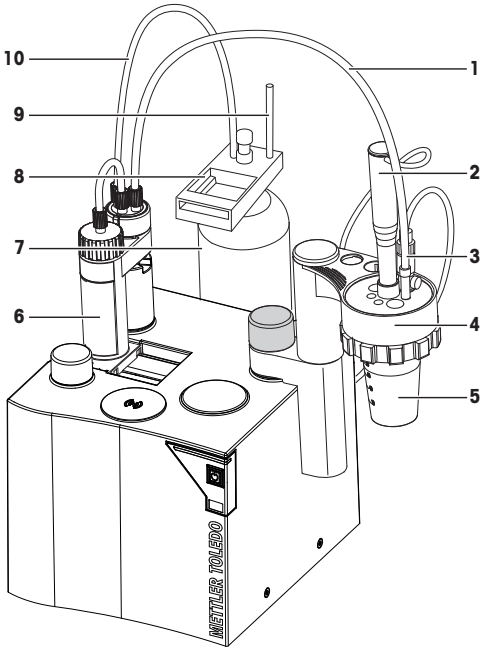

1	Dispensing tube	**6**	Burette
2	Compact stirrer	**7**	Titrant bottle
3	Electrode	**8**	Burette holder
4	Titration stand	**9**	Holder for dispensing tube
5	Titration vessel	**10**	Suction tube

4.1.8.1 Attach the titration stand to the titrator

- The spacing ring, clamping ring and threaded ring are mounted on the titration stand.

1 Remove the cover from one of the mounting holes.
2 Position the titration stand over the uncovered mounting hole.
3 Place the screw in the hole of the titration stand and screw it in the mounting hole.
4 Tighten the screw.

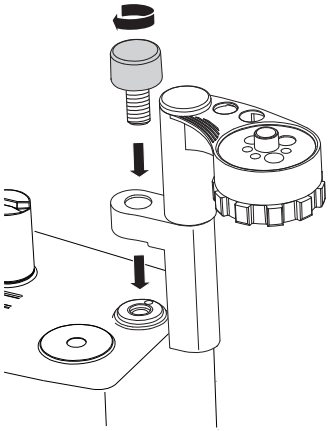

4.1.8.2 Swivel the titration stand

The titration stand can be swivelled among three predefined positions. If you use a compact stirrer, use the titration stand in the swivelled out position.

1 Pull the titration stand upward out of the holder until you feel resistance.
2 Swivel the titration stand to the desired position.
3 Slide the titration stand down until it rests on the holder.

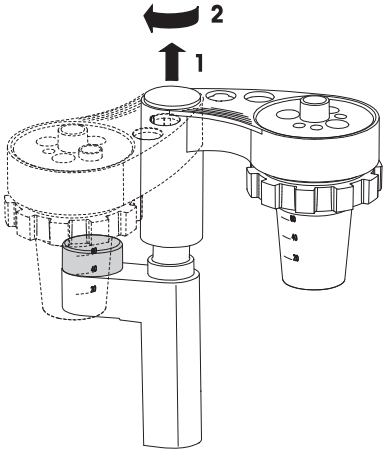

4.1.8.3 Attaching and removing the titration vessel

Attaching the titration vessel

- The titration stand is swivelled out.

1 Turn the threaded ring a quarter to a half turn clockwise.
2 Guide the titration vessel upward (1) into the titration stand and hold the titration vessel in place.
3 Tighten the threaded ring (2).
4 Check that the titration vessel is firmly attached before you let it go.

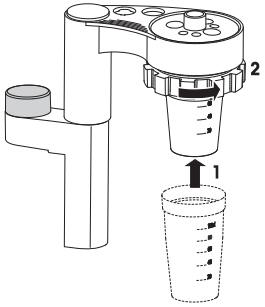

Removing the titration vessel

- The titration stand is swivelled out.

1 Hold the titration vessel with one hand.
2 Turn the threaded ring a quarter to a half turn clockwise (1).
3 Pull the titration vessel downward (2) out of the titration stand.

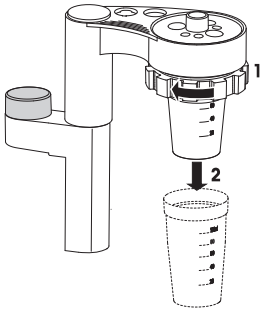

4.1.8.4 Recommended positions for sensors, tubes and stirrers

1 Dispensing tube
2 Sensor
3 Sensor or rinsing unit
4 Sensor
5 Compact stirrer
6 Dispensing tube
7 Sensor
8 Dispensing tube

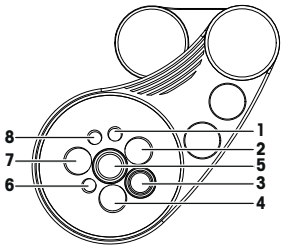

4.1.8.5 Connect the compact stirrer

Depending on the configuration of the titrator, three or more compact stirrers can be connected. Compact stirrers attached directly to the titrator can be used in the manual titration stand or in connection with sample changers. The titrator controls turning on and off and stirrer speed.

1 Shut down the titrator.

2 Plug the compact stirrer into one of the **STIRRER PUMP** sockets on the rear of the titrator.

3 Start up the titrator.

⇨ The titrator detects the connected compact stirrer.

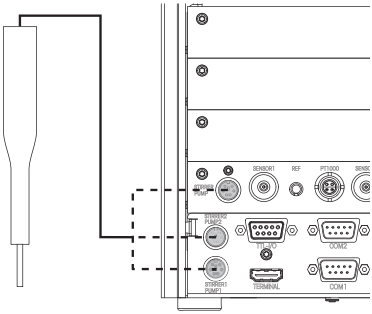

4.1.8.6 Connect the measuring electrode

- No task is running on the titrator

1 Insert the measuring electrode into an opening in the titration stand.

2 Connect the triaxial cable to the **SENSOR1** socket or **SENSOR2** socket of the analog board on the rear of the titrator.

⇨ The titrator detects the measuring electrode.

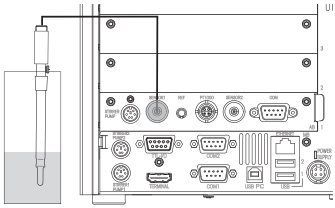

4.1.8.7 Attaching the electrode arm

The electrode holder is used to receive an electrode in an electrode sleeve.

1 Remove the cover from one of the mounting holes.

2 Position the electrode holder over the uncovered mounting hole.

3 Place the screw in the hole of the electrode holder and screw it in.

4 Tighten the screw.

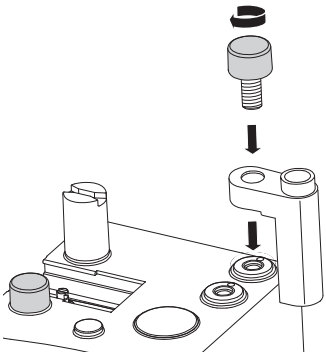

4.1.8.8 Insert and connect a burette

Current generation burettes are equipped with an Smart Tag on the holder (visible by the small, black cover plate). The Smart Tag is used for reading and writing properties such as titrate name, concentration or usable life.

For a description of the burette, refer to the operating instructions supplied with burettes.

- The burette is assembled.
- The burette holder is mounted on the titrant bottle.
- The piston rod (5) is in the home position.

1 Turn the arrestment knob (6) in the opposite direction of the arrow.
2 Orient the burette so that the recesses on the driver arm (3) are parallel to the groove (7) on the base of the burette housing.
3 Slide the burette (8) on to the titrator either from the left (as illustrated) or from the right (4).
4 Turn the arrestment knob (6) in the direction of the arrow to secure the burette.
5 Place the suction tube from the titrant botttle into the left hole (1) of the burette.
6 Place the dispensing tube into the right hole (2) of the burette.
7 To prevents spills, place the free end of the dispensing tube into the titration vessel, the waste bottle or another suitable container.

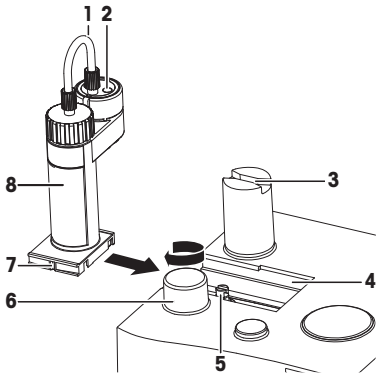

4.1.9 Connect a Rondolino TTL sample changer

The Rondolino sample changer is controlled by TTL signals from the titrator.

The installation of the sample changer is described in the separate Rondolino operating instructions.

- The sample changer is installed and switched off.

1 Shut down the titrator.
2 Plug the cable supplied with the sample changer into the **TTL-I/O** socket on the sample changer.
3 Plug the cable into the **TTL-I/O**socket on the rear panel of the titrator.
4 Start up the titrator.
5 Switch on the sample changer.
⇨ The titrator automatically detects the sample changer.

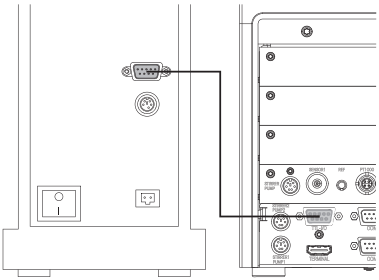

5 Operating the instrument

5.1 Start up the titrator and shut down the titrator

Start up the titrator

– Press the power button (2).
  ⇨ The StatusLight (1) turns green and turns off after a few seconds.
  ⇨ The titrator starts up and detects connected devices.
  ⇨ The titrator is ready for use when the StatusLight (1) is steady and green.

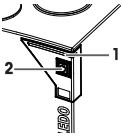

Shut down the titrator from the touch screen

– Tap **Home** > **Log out** > **Shut down**.
  ⇨ The titrator stops running tasks and shuts down.

⇨ The AC adapter and the control circuit for the power button are energized. The rest of the titrator is no longer energized.

Shut down the instrument using the power button

– Press the power button for less than 1 s.
  ⇨ The titrator stops running tasks and shuts down.

⇨ The AC adapter and the control circuit for the power button are energized. The rest of the titrator is no longer energized.

Shut down of the instrument in emergency situations

– Pull the plug of the power cable out of the power outlet.

5.2 Running a general titration

To explain the procedure for a titration method, a simple acid-base titration with a manual titration stand is described. 5 ml of HCl solution (0.1 mol/L) is titrated with NaOH (0.1 mol/L).

Material

Sensor: DGi115-SC

Chemicals

For this titration you need the chemicals listed below.

- Approx. 5 ml of a HCl solution (0.1 mol/L)
- A titrant bottle containing a carbonate free NaOH solution (0.1 mol/L)
- 3 buffer solutions: pH 4.01, 7.00 and 9.21 from METTLER TOLEDO
- Approximately 50 mg potassium hydrogen phthalate

5.2.1 Preparation

- The titrator is assembled, connected, and installed (see Installation).
- A compact stirrer is placed in the appropriate opening on the titration stand and connected to the **STIRRER PUMP** output of the titrator.
- A USB printer is connected to port **USB 1** or **USB 2** of the titrator.

1 Tap **Setup** > **Hardware** > **Titration Stands** > **Manual stand** > **Save**.
2 Prepare the 10 ml burette for the sodium hydroxide.
3 To protect the NaOH solution against CO_2, install a drying tube on the burette holder of the NaOH bottle.
4 Insert the burette.
  ⇨ An **Info** dialog appears, which allows you to initialize the burette. Burettes only have to be initialized the first time they are used on the titrator.
5 If you use the burette for the first time on the titrator, tap **Initialize**.
  ⇨ The titrator initializes the burette.
6 When the burette is initialized, remove the burette from the titrator and place the burette back on the titrator.
  ⇨ The titrator recognizes the initialized burette.
7 To create a new titrant for the burette, tap **Create**.
8 To assign a titrant to the burette, tap **Assign** .
  ⇨ The system updates the burette data and the assigned titrant appears with the suffix **PnP** in the setup.
9 Attach a titration vessel to the titration stand and connect the dispensing tube for the titrant to the titration head.

5.2.2 Rinsing and filling the burette

To fill the burette and tubes with titrant and remove any air bubbles from the system, rinse the burette three times with titrant with the manual operation **Rinse**.

- The titrator is prepared as described in [Preparation ▸ Page 23].

1 To ensure that the system has no leaks, check all tubes and closing points for firm seating.
2 Make sure that the free end of the dispensing tube for the titrant is placed in the titration vessel or another container.
3 Tap **Manual** > **Burette** > **Rinse**.
   ⇨ The dialog **Rinse** opens.
4 Set **Titrant** to **NaOH 0.1 mol/L**.
5 Set **Cycles** to "3".
6 To start the rinse procedure, tap **Start**.
   ⇨ The rinse procedure starts and an animation shows the progress.
7 When the rinse procedure is complete, tap **OK**.
   ⇨ The dialog **Rinse** opens.

⇨ The burette is filled and the tubes are free of air bubbles.

5.2.3 Calibrating and testing the sensor

The following describes how to calibrate a pH sensor or carry out a sensor test.

Preparation

1 Make sure no analysis is running on the titrator.
2 Connect the plug of the sensor (DGi115-SC) to the port "SENSOR" of the titrator.
3 Insert the sensor into the titration head.
4 Prepare three titration vessels containing buffer solutions (pH 4.01, 7.00 and 9.21).

5.2.3.1 Calibrate the sensor

1 Tap **Methods** > **New** > **Standard method templates** > **Calibration**.
   ⇨ A list of method functions appears.
2 Tap **Sample (Calib)**.
   ⇨ The dialog **Sample (Calibration)** opens.
3 Make sure **Sensor** is set to DGi115-SC.
4 Make sure the settings for the buffer are as listed below.
   Buffer 1: 4.01
   Buffer 2: 7.00
   Buffer 3: 9.21
5 Tap **OK** > **Save**
   ⇨ The new method is saved in the method list, with the next free ID and with the title **Calibration**.
6 Tap **Start**.
   ⇨ The dialog **Start analysis** opens.
7 To ensure that the system has no leaks, check all tubes and closing points for firm seating.
8 Tap **Start**.
   ⇨ The system asks you to attach the titration vessel with sample 1 to the titration arm.
9 Attach the titration vessel with the buffer solution with pH 4.01 to the titration arm and tap **OK**.
   ⇨ The measurement starts after the stirring time.
   ⇨ During the measurement the online screen displays the time, the measured value in [mV] and a curve.
   ⇨ During the calibration, the system will output a record on the printer.
   ⇨ When the measurement is completed, the system asks you to attach the titration vessel with the next sample to the titration arm.

10 Remove the titration vessel from the titration arm.
11 Rinse the electrode with deionized water.
12 Repeat the last 3 steps for the buffer solution with pH 7.00 and the buffer solution with pH 9.21.
   ⇨ When the calibration is completed, the calibration data is automatically copied to the setup.

5.2.3.2 Test the pH-sensor

1 Tap **Methods** > **New** > **Standard method templates** > **Sensor test**.
   ⇨ A list of method functions appears.
2 Tap **Sample (Calib)**.
   ⇨ The dialog **Sample (Calibration)** opens.
3 Make sure **Sensor** is set to DGi115-SC.
4 Make sure the settings for the buffer are as listed below.
   Buffer 1: 4.01
   Buffer 2: 7.00
   Buffer 3: 9.21
5 Tap **OK** > **Save**
   ⇨ The new method is saved in the method list with the next free ID and with the title **Sensor test**.
6 Tap **Start**.
   ⇨ The dialog **Start analysis** opens.
7 To ensure that the system has no leaks, check all tubes and closing points for firm seating.
8 Tap **Start**.
   ⇨ The system asks you to attach the titration vessel with sample 1 to the titration arm.
9 Attach the tiration vessel with the buffer solution with pH 4.01 to the titration arm and tap **OK**.
   ⇨ The measurement starts after the stirring time.
   ⇨ During the measurement the online screen displays the time, measurement in [mV] and the curve.
   ⇨ During the pH-sensor test, the system will output a record on the printer.
   ⇨ When the measurement is completed, the system asks you to attach the titration vessel with the next sample to the titration arm.
10 Remove the titration vessel from the titration arm.
11 Rinse the electrode with deionized water.
12 Repeat the last 3 steps for the buffer solution with pH 7.00 and the buffer solution with pH 9.21.
   ⇨ When the pH-sensor test is completed, the data is automatically copied to the setup.

5.2.4 Determining the titer

1 Weigh about 50 mg of potassium hydrogen phthalate and dissolve it in a titration vessel containing deionized water.
2 Tap **Methods** > **New** > **Standard method template** > **Titer with EQP**.
   ⇨ A list of method functions appears.
3 Tap **Sample (Titer)**.
4 Set the parameter **Entry** to **Before** and tap **OK**.
5 Tap **Titration (EQP)** > **Termination**.
6 Activate **After number of recognized EQPs**, set **Number of EQPs** to 1 and tap **OK**.
7 To exit the method function, tap **OK**
8 To save the new method, tap **Save**.
9 To ensure that the system has no leaks, check all tubes and closing points for firm seating.
10 Tap **Start**.
   ⇨ The **Start analysis** dialog opens.
11 Enter the sample size.

12 Tap **Start**.
   ⇨ The titer determination begins.
   ⇨ The titrator asks you to add sample 1/1.
13 Attach the titration vessel with potassium hydrogen phthalate solution to the titration head and tap **OK**.
   ⇨ The titration starts after the stirring time.
   ⇨ During the titer determination, the online screen displays the measured pH values over the titrated volume in [mL].
   ⇨ After the titer determination is completed, the titer is copied to the setup.
14 After the titer determination is completed, rinse the sensor with deionized water.

5.2.5 Run an EQP titration

5.2.5.1 Prepare the sample

1 Fill 5 ml HCl (0.1 mol/L) into a titration vessel and dilute it with approx. 50 mL deionized water.
2 Attach the titration vessel to the titration arm.

5.2.5.2 Configure the method

1 Tap **Methods** > **New** > **Standard method template** > **EQP**.
2 Tap **Title**.
3 Enter a title for the new method in the field **Title** and tap **OK**.
4 Tap **Sample**.
5 In the parameter **ID 1** enter your choice of ID for the sample to be analyzed.
6 Set **Entry type** to **Volume**.
7 Set **Lower limit** to 6.0 mL.
8 Set **Upper limit** to 50.0 mL.
9 Set **Entry** to **Before** and tap **OK**.
10 Tap **Titration (EQP)** > **Termination**.
11 Activate the parameter **After number of recognized EQPs**, set **Number of EQPs** to 1 and tap **OK**.
12 To exit the method function, tap **OK**.
13 Tap **Calculation R1**.
14 Tap **Result proposals**.
15 Select the result **Content** with the unit **mol/L**.
   ⇨ The main parameters in the method function **Calculation R1** are filled in automatically.
16 Set **M [g/mol]** to **Hydrochloric acid** and tap **OK**.
17 Tap **Calculation R2**.
18 Tap **Delete**.
19 Tap **Save**.

5.2.5.3 Create an indirect shortcut

1 Tap **Start**.
   ⇨ The **Start analysis** window opens.
2 Tap **AddToHome**.
   ⇨ The **Shortcut parameters** window opens.
3 Enter a name for the shortcut in **Description**.
4 Make sure **Immediate start** is deactivated.
5 Tap **Save**.
⇨ The home screen with the new shortcut opens.

5.2.5.4 Perform the analysis

1 To ensure that the system has no leaks, check all tubes and closing points for firm seating.

2 Select the shortcut on the home screen.
   ⇨ The dialog **Start analysis** opens.
3 In the parameter **Enter sample size** enter the sample size.
4 Tap **Start**.
   ⇨ You are prompted to add the sample.
5 If the titration vessel is not attached to the titration arm, attach the titration vessel containing the HCl solution to the titration arm and tap **OK**.
   ⇨ The titration starts after the pre-stirring period.
   ⇨ During the titration, the screen displays the measured pH values over the titrated volume in [mL].
   ⇨ After the titration, a record is printed.
   ⇨ All results are saved.
6 After the titration, rinse the sensor with deionized water.
7 To view the saved result, tap **Home** > **Results**.

5.3 Stopping Methods

Analyses or series of analyses that are in progress can be interrupted or terminated by the user in order to intervene in the analysis process or by the titrator itself.

The options available in the event of an interruption of the analysis procedure are listed below.

5.3.1 Suspending or stopping an ongoing analysis (GT or BI) by the user

If you wish to make changes when an analysis or series is in progress, you can suspend the relevant method as follows:

1 Tap **Suspend** (1) to suspend the current analysis.
   ⇨ The dialog **Suspending options** opens.

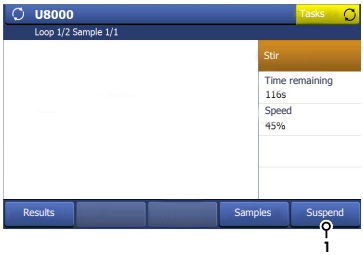

2 Tap **Save series data** (1) to save the current sample series. Only the completed samples will be saved.

⇨ If the maximum permitted number of series has been reached, the series is not saved.

⇨ Sample data from a method that is waiting in a queue can be saved by selecting **Suspend** > **Save series data**.

3 Tap **Skip sample** (2) to skip the current sample and continue with the next sample of the series.

⇨ The current sample is marked in **Results** as **Excl.**.

4 Tap **Skip loop** (3) to skip the loop and continue with the next loop of the series.

⇨ The loop is marked in **Results** as **Excl.**.

5 Tap **Continue** (4) to continue with the current sample.

6 Tap **Stop definitely** (5) to stop the current method.

Note

- If a **Calib.** loop is skipped, the analysis continues in accordance with the corresponding method function **Calibration**.
- If required, it is possible to include a skipped sample (**Excl.**) into a statistic manually in the dialog **Results**.

6 Transporting the titrator

If you transport the titrator over long distances, use the original packaging.

1 Empty all tubes.
2 Empty the titration vessel.
3 Shut down the titrator.
4 Unplug the titrator.
5 Remove all cable connections.
6 Remove the titration vessel from the titration stand.
7 Remove all tubes.
8 Remove all burettes.
9 Move the titrator to the new location.

7 Care and maintenance

7.1 Cleaning

Housing of the titrator

Clean the housing of the titrator using a cloth moistened with alcohol.

Titration stand

1 Loosen the threaded ring (4) and remove it from the titration stand (1).
2 Remove the clamping ring (3) and the spacing ring (2) from the titration stand (1).
3 Clean the parts of the titration stand.
4 Place the clamping ring (3) and the spacing ring (2) in the threaded ring (4).
5 Screw the threaded ring (4) into the titration stand.

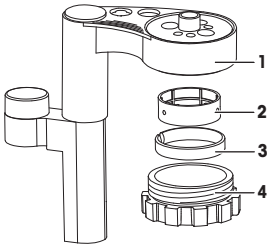

7.2 Maintenance

Mettler Toledo recommends that a preventive maintenance and calibration certification is done at least once a year through your local Mettler Toledo Service Organization.

NOTICE

Danger of damage to the titrator through leaking burettes!

Substances leaking out of burettes can enter the housing and damage parts of the installed boards.

– Check the burettes for leaks and replace leaking burettes.

Daily

- Remove the burettes from the titrator.
- If you work with corrosive substances, rinse the burettes.
- If you work with corrosive substances, check the burettes for leaks and replace leaking burettes.

Weekly

- If you use the burettes daily, check the burettes for leaks and replace leaking burettes.

Before periods of inactivity

1 Rinse the burettes.
2 Empty all tubes.
3 Empty the titration vessel.
4 Shut down the titrator.
5 Unplug the titrator.
6 Remove the titration vessel from the titration stand.
7 Remove all tubes.
8 Remove all burettes.

8 Disposal

In conformance with the European Directive 2012/19/EU on Waste Electrical and Electronic Equipment (WEEE) this device may not be disposed of in domestic waste. This also applies to countries outside the EU, per their specific requirements.

Please dispose of this product in accordance with local regulations at the collecting point specified for electrical and electronic equipment. If you have any questions, please contact the responsible authority or the distributor from which you purchased this device. Should this device be passed on to other parties (for private or professional use), the content of this regulation must also be related.

Thank you for your contribution to environmental protection.

9 Technical data

9.1 Titrator

Power rating external power supply	Input values	100...240 V AC, 1.8 A ±10%
	Input frequency	50 - 60 Hz
	Output values	24 V DC, 5 A
Power rating instrument	Input values	24 V DC, 3.2 A
	Connector type	4-pin, power Mini-DIN female
Dimensions	Width	210 mm
	Depth	246 mm
	Height	250 mm
	Weight	4.3 kg (without plug-in cards)
Materials	Titrator housing	Crastin® PBT
	Titration arm	Crastin® PBT
	Spacing ring	Crastin® PBT
	Clamping ring	Crastin® PBT
	Threaded ring	Crastin® PBT
	Chassis	Stainless steel
Ambient conditions	Ambient temperature	+5 °C…+40 °C
	Relative humidity	Max. 80 % (non-condensing) at 31 °C, linear fall to 50 % at 40 °C
	Altitude	2000 m above sea level
	Use	In interior spaces
	Overvoltage category	II
	Pollution degree	2

Contains runtime modules from decNumber, © Copyright IBM Corporation 2001, 2004. All Rights Reserved.

Power Management

The devices have a power management system which prevents the titrator from switching off unexpectedly in the event of a power overload. Tasks which would cause a power overload, because a number of pumps, stirrers and burette drives are already in use, cannot be started at all. A notification brings the start attempt to the attention of the user. It is advisable, if possible, to connect pumps and stirrers directly to sample changers or other devices which have their own power supply, such as a TBox, instead of to the titrator itself.

9.2 Terminal

Dimensions	Width	194 mm
	Depth	129.5 mm
	Height	56.7 mm
	Weight	638.4 g
Materials	Top housing	EN ZL-ZnAl4Cu1 (EN ZI-0410)
	Lower housing	Crastin SO653
	Cover glas	Gorilla glas

To protect your product's future:
METTLER TOLEDO Service assures the quality, measuring accuracy and preservation of value of this product for years to come.

Please request full details about our attractive terms of service.

www.mt.com/titration

For more information

Mettler-Toledo GmbH
Im Langacher 44
8606 Greifensee, Switzerland
www.mt.com/contact

Subject to technical changes.
© Mettler-Toledo GmbH 06/2017
30297063C

30297063