Shooting Partner Inc.

Wireless Firearm Target Control System
On-line Operating Manual

Index

Subject	Page
Federal Communications Commission Instructions.	2
Safety.	3
Installation.	5
Operation.	8
Appendix One. Maintenance.	17
Appendix Two. Target frames.	20
Appendix Three. Troubleshooting.	23

Parts of this manual are paraphrased on our website and that information may be out of date. Older Operating Manuals may be in circulation. This on-line manual provides the most current and correct information.

Federal Communications Commission Instructions to the User

This equipment has been tested and found to comply with the limits for a class B digital device, pursuant to part 15 of the FCC Rules. These limits are designed to provide reasonable protection against harmful interference in a residential installation. This equipment generates, uses and can radiate radio frequency energy and if not used in accordance with the instructions, may cause harmful interference to radio communications. However, there is no guarantee that interference will not occur in a particular installation. If this equipment does cause harmful interference to radio or television reception, which can be determined by turning the equipment off and on, the user is encouraged to try to correct the interference by one or more of the following measures:

* Reorient or relocate the receiving antenna.

* Increase the separation between the equipment and receiver.

∗Consult the dealer or an experienced radio/TV technician for help.

This equipment has been certified to comply with the limits for a class B computing device, pursuant to FCC Rules. Operation with non-approved equipment is likely to result in interference to radio and TV reception. The user is cautioned that changes and modifications made to the equipment without the approval of manufacturer could void the user's authority to operate this equipment.

Safety

Here are a few specific safety instructions:

If you are not using your ShootingPartner on a specially constructed firearms range always position it with an adequate backstop such as a high sandy or soft soil bank. Do not forget that a high power pistol round will pierce steel plates or thick wooden boards. Avoid rocky areas or backstops that could cause ricochets. Choose a location where no persons or animals can wander unnoticed between your target and the backstop.

Build a barrier in front of the metal part of the target system frame using earth or sandbags to prevent ricochets and protect the target frame from damage. Your target system has been designed with a low profile to reduce the possibility of accidental hits on this part of the target. However, anyone can be unlucky and produce a misplaced shot.

Keep all target equipment such as batteries, air tanks and control units away from the target area. Naturally, you do not want to shoot holes in your equipment. More importantly, a pierced air tank could explode violently injuring yourself or bystanders.

Do not put the control unit in a position that could cause users to cross the field of fire to operate it.

Do not operate the control unit while anyone is attaching a paper target to the frame. Unexpected rotation of the target could cause injury. Ensure all persons are standing clear of your ShootingPartner target when you first apply power to the electronic control unit.

Learn to walk before you try to run. The ShootingPartner target system is designed to allow progressive improvements in shooting skills. Do not try advanced training, such as very short presentation times or “Random” operation, until you have mastered the easier tasks. To do so risks mistakes and accidents. Use the target as it is designed to be used to progressively improve your skills. In this way you will learn more steadily and will retain the skills you learn more effectively. Pushing too far ahead too fast will cause poor skill retention and erratic performance.

The ability to draw a pistol quickly and safely from a holster is a necessary skill of practical pistol usage. It is also a particularly risk laden part of pistol training. Do not fool around during this phase of training. Keep the number of people around the range to a minimum and keep them far back behind the firing line. Drawing a pistol quickly is like developing a golf swing. Just as you would use the services of a professional instructor to get your golf swing correct I suggest you visit a professional firearms instructor to perfect your fast draw technique. It

will be a safer and more effective course of training in the long run. If you teach yourself a bad fast draw technique initially you will have to unlearn that technique later on, before you learn to draw the proper way, so why waste time?

Read the operating instructions supplied with your ShootingPartner carefully. Call us or e-mail us if you have any questions. We are pleased to help you get the best results from your ShootingPartner.

Installation

Installation of the ShootingPartner wireless turning target system is very simple. In this section of the Manual we will provide you with basic information on how the target system is set up. We will provide details about choice of location, operating adjustments, safety considerations and troubleshooting problems. However, before installation is attempted a few basic safety procedures need to be covered.

Use caution while you are installing the ShootingPartner target system, especially if two or more people are working together. Accidental operation of the target during installation could cause serious injury. Do not allow anyone to operate or play with a transmitter while the equipment is being installed.

Do not turn on the air to the target system until all other installation actions have been completed. Then, when all personnel are away from the targets, turn on the air supply. The targets will move rapidly to the "edge-on" position as the air is supplied.
If you are using your ShootingPartner on an established firearms range follow approved range procedures. If you are using the system in an informal setting ensure that there is a safe area behind the target. This should be a high, wide, rock free embankment. Make sure no person or animal can enter the backstop area un-noticed.

To install the wireless turning target system, first ensure the transmitters are in a safe place where they cannot be used during target installation. Then :-

Position the targets in their required locations and assemble if necessary. If possible, install the target base behind a dirt bank or use sandbags in front of the ShootingPartner metal base to avoid ricochets and protect the unit from accidental damage (as shown in Diagram A). You will see that even if the officer made a very low shot he would hit the sandbags before he hit the metal part of the target frame.

Diagram A

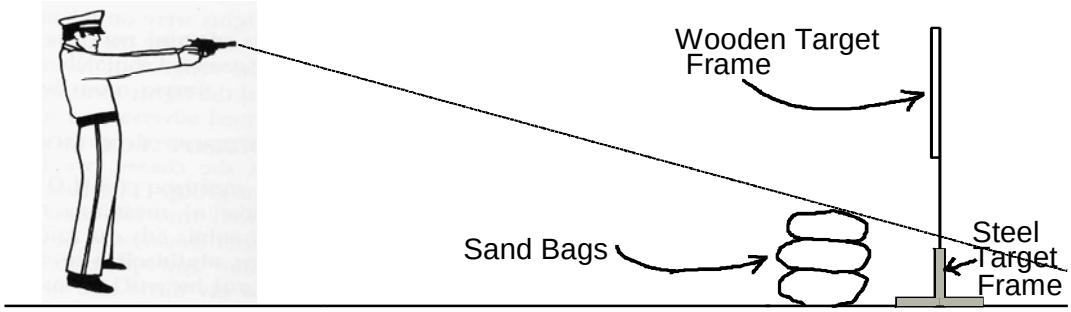

Ensure you position the target frame so that a leg of the base without the pneumatic cylinder points at the firing position (as shown in Diagram B). The air connection can point to the left or the right of the target base as is convenient. The wooden target frame is then inserted so that the target faces the shooter when the pneumatic cylinder is extended. (You may need to use stakes through the holes in the feet of the target base to prevent the frame from moving during use).

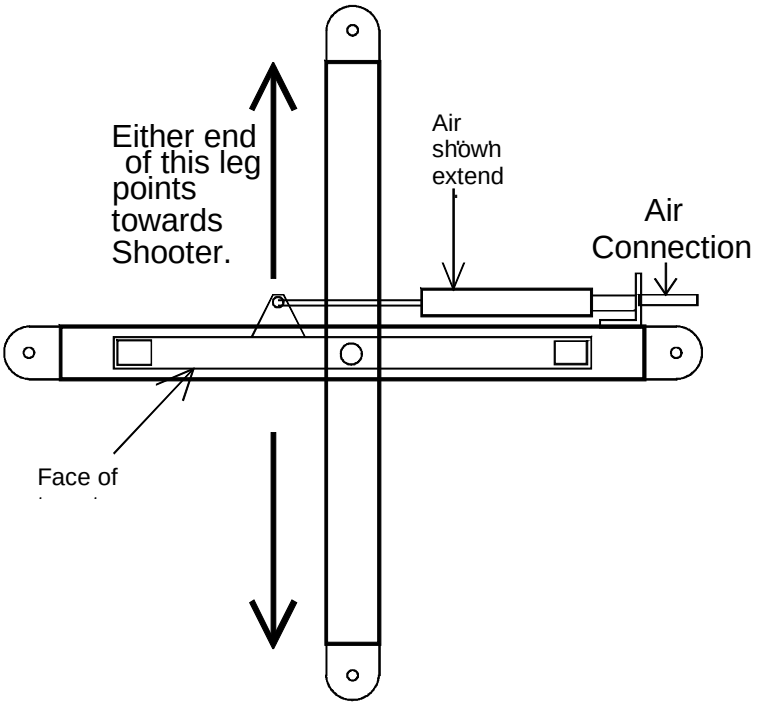

Position the receiver in a location where it will not be hit by misplaced shots. If you are using a "remote antenna mount" the receiver can be protected behind sandbags or in a dip in the ground. Using appropriate length cables connect the receiver to the targets. The connectors on the receiver are designed so that they can only be assembled in one position. Be careful not to force the connectors into position incorrectly. First gently push the connector into position. You may need to turn the connector until you feel the connector slide into place. Then rotate the locking collar to lock the connector in place. Rotating the locking collar also forms the weatherproof seal on the connector. The connector for the power supply is larger than the connectors for the targets and it cannot be accidentally misconnected to a target position.

Connect the battery connectors to the battery terminals (only required if using a battery power supply). Ensure the polarity is correct. Do not connect the power connector to the receiver yet.

Position the air-tank well out of the path or any possible misplaced shots. Usually a position at least twenty-five feet from the nearest target and at a forty-five degree angle towards the shooters works. See diagram C.

Locate the air tank. Ensure the air tank is well away from ANY POSSIBLE bullet impact area and that it is, preferably, behind some form of protection. We recommend a minimum of twenty-five feet of air hose but this depends also on the range layout.

Position the tank well off to one side of the target position and towards the firing position (as shown in Diagram C).

Diagram C.

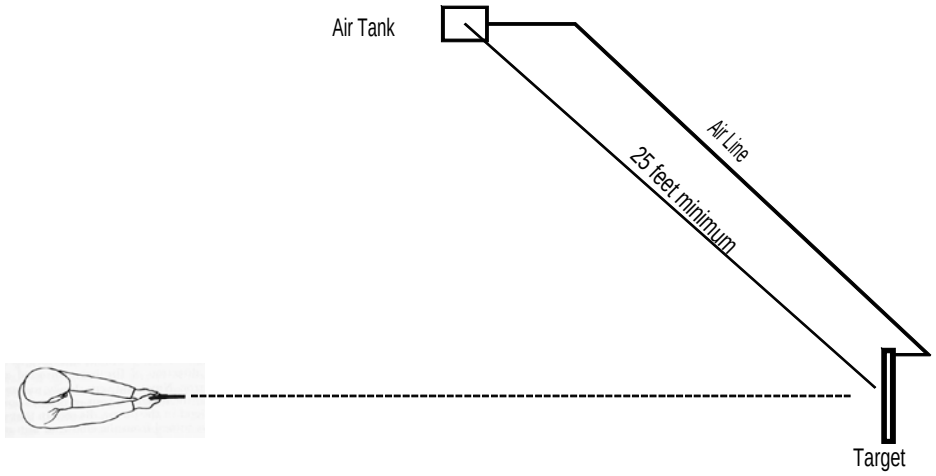

Connect the air-hoses to the targets. This may require various hoses and connectors depending on the range layout.
Put the required targets onto the target frames.
Clear personnel from the target area.
Connect the power connector to the receiver. This is done in the same way the target connectors are connected. The red power light on the receiver will turn on if the power supply is properly connected and electrical power is available.
Connect the air-hose to the air-tank and turn on the air supply. The targets will move rapidly to the "edge-on" position.
Carry out a final safety inspection of the range area.
Installation is now complete.

Operation.

This “Operation” section of the Operating Manual is divided into two sub-sections,

The first sub-section, “THE CONTROL PANEL” introduces the LCD display screen and the control buttons. The “On/Off” and “Start” buttons are dealt with in detail.

The second sub-section, “HOW TO USE THE “Select” BUTTONS”, shows how to change the values shown on the display with the “Select” buttons. This section does not give information on the USE of the control unit. That subject is covered in the next section of the Manual.

Actually, the easiest way to find out how the ShootingPartner wireless control unit works is simply to play with it. It is far, far easier to use than a television remote control! If you have your new control unit available then turn it on and follow through with this explanation.

THE CONTROL PANEL

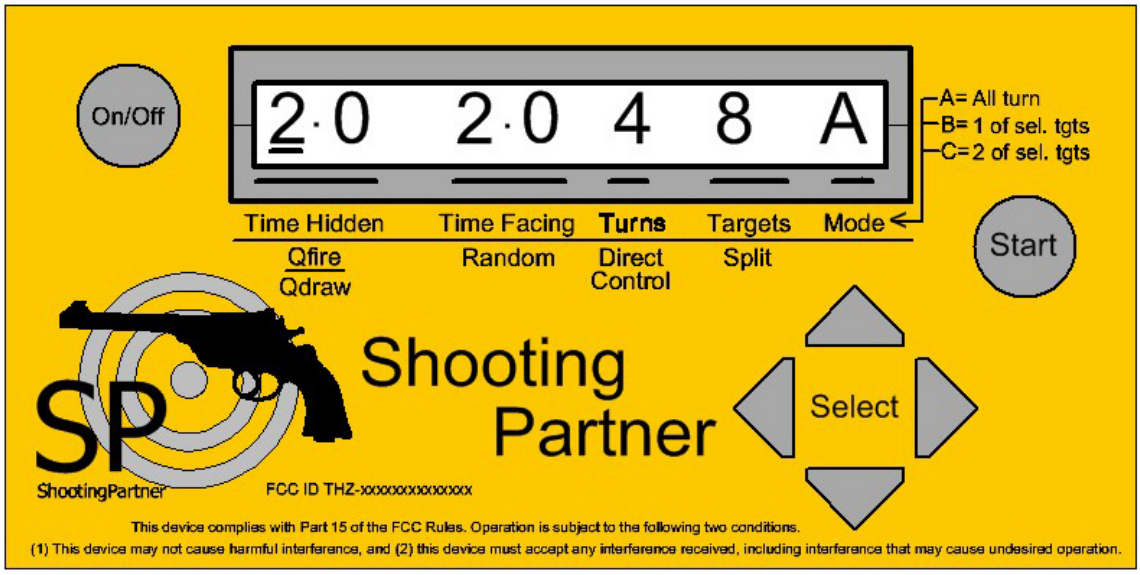

The illustration above shows the control panel of the ShootingPartner wireless control unit as it appears when the unit is first turned on.

There is one “large character” LCD display on the unit that displays ALL of the user selections at one time. During this explanation the LCD display will be referred to as the “display”. The values that appear in the display on start-up are default values that are stored in the unit. The small “bar” shown under the left hand number two is called the cursor.

The information on the display is divided into five groups according to its function. There is a text block below each group of characters that briefly describes the items that will be found in that group. The first name that appears in the text block is used as the name of the group. For example, in this explanation, we refer to the “Time Hidden” group.

There are six gray colored operating buttons on the ShootingPartner control panel. The first two, the “On/Off” button and the “Start” button, have their names printed on them.
The four remaining buttons on the control unit are the “Select” buttons. Individually they are “arrow-head” shaped but they are grouped together into a diamond pattern. The word “Select” is printed in the center of the group of buttons. The individual buttons are not labeled but for explanation purposes the buttons will be named after the direction in which they point. Therefore we will have the “left” button, “right” button, “up” button and the “down” button.

The “On/Off” Button.

The operation of the “On/Off” button is simple. Press the button once to turn the unit “On” and press it again to turn the unit “Off”. The status of the unit is shown by the display. If the unit is turned “On” the display should be operating. If the display does not turn “On” when the “On/Off” button is pressed this indicates that the unit’s batteries should be replaced.

The “Start” Button.

Except in the “Direct Control” mode pressing the “Start” button does not cause the targets to move immediately. The ShootingPartner system is far in advance of the simple wireless control units that merely substitute a remote control switch for the old-style switch and cable. In the ShootingPartner system the “Start” button initiates the programmed sequence of events that the user has selected in the display window, this sequence includes a random duration start delay.
If immediate push-button control of the targets from the “Start” button is required it is made possible by selecting the “Direct Control” mode. This selection will be covered in a later part of the document.

HOW TO USE THE “Select” BUTTONS

The “Select” Buttons.

If this group of buttons looks suspiciously like the pattern of buttons that you see on a TV remote control then it is no accident. They operate in exactly the same way.
By pressing the “left” or “right” buttons the cursor can be moved across the display. It will jump from its present position to the next group, left or right of its present position, depending upon which button was pressed. The cursor will even loop around the display. If the cursor is in the position shown in the “Control Panel” illustration and you press the “left” button the cursor will jump around the display and position itself under the letter “A” at the other end of the display. Therefore, since you can move it in either direction, a

maximum of TWO button presses is all that is required to move the cursor between any two groups on the display.

Positioning the cursor under a group on the display allows the values displayed for that group to be changed using the “up” and “down” buttons. You change values in the ShootingPartner control unit display in exactly the same way that you change channels with a TV remote control. Pressing either the “up” button or the “down” button cycles through the values that can be selected in the group, either increasing or decreasing the displayed value, depending on which button was pressed. The buttons work the same way as the “left” and “right” buttons, including the loop around feature. You can only change the values of the group that has the cursor positioned below it.

The following diagram shows the values that can be selected for each group in the display window. The start up display is used as a starting point for the illustration.

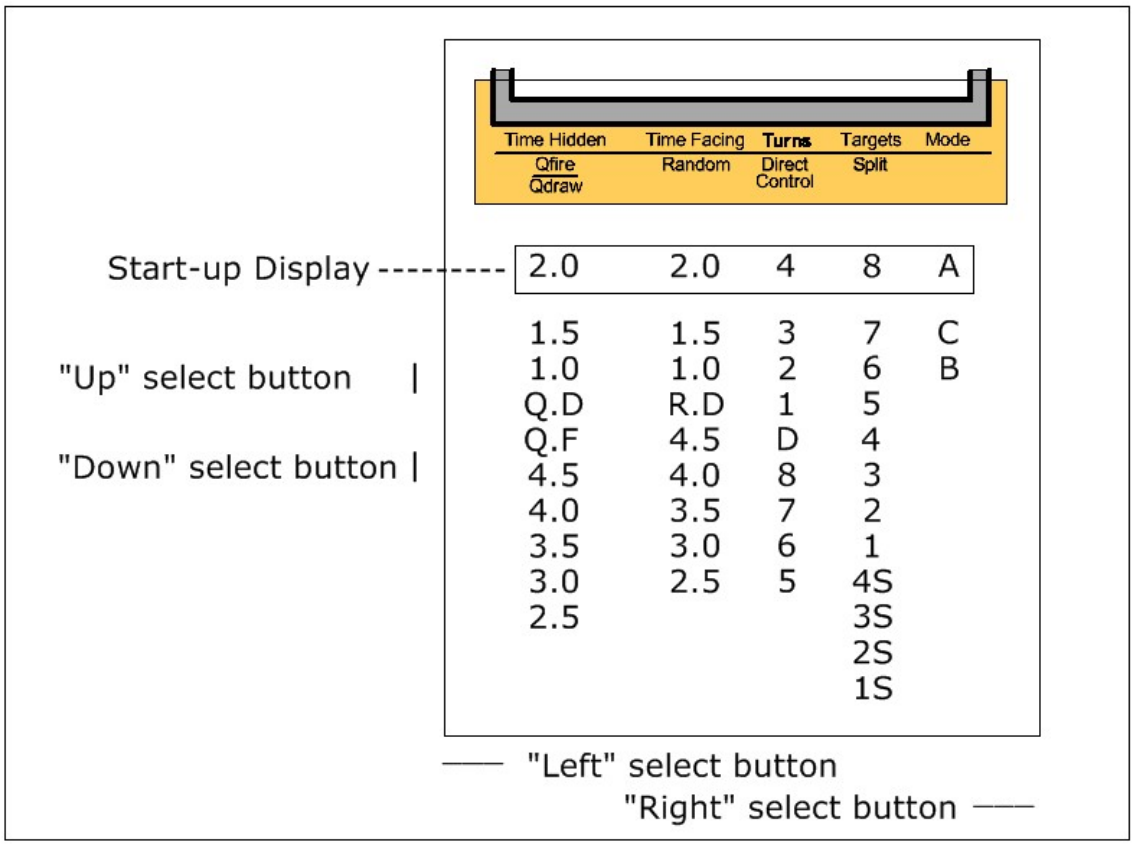

That is all that you need to know to program the ShootingPartner control unit. Move the cursor under the group you wish to change with the “left” and “right” buttons then change the displayed values with the “up” and “down” buttons. You can monitor all selections you make at one time on the LCD display. Operation of the control unit really is easier than setting the menu on a VCR!

Using the ShootingPartner Wireless Turning Target System.

In the “Operation” section of this Operating Manual instructions were given on how to make selections on the control panel of the transmitter/control unit. In this document we assume you have learned how to make those selections and we concentrate on how to use the system.

This “Use” section of the Operating Manual is divided into two sub-sections,

The first sub-section, “ShootingPartner Basic Operation” provides some general useful information on how the system works and then it expands on the “Operation” section and explains what the various selections made in the display achieve.

The second sub-section, “ShootingPartner Advanced Operation” provides some practical advice and tricks about how to use the system on the firing range.

ShootingPartner Basic Operation.

Introduction - What You Need to Know.

The ShootingPartner transmitter/control unit requires at least one associated receiver to allow target operation. This receiver will control eight targets. By the addition of extra receivers, extra targets can be added in groups of up to eight targets. Each target in each additional group of targets will operate in exactly the same way as the corresponding target in the original group of targets. The number of receivers, and hence targets, that can be added is limited only by the space available on the firing range and the 1000 foot operating range of the transmitter. At a quick guess I would think that would allow about 10,000 targets, great if you are practicing riot control!

With the ShootingPartner target system each target in a group of eight is operated independently by the transmitter/control unit. This allows many, many interesting options. Some of these options are pre-programmed into the control unit. The others depend on how the equipment is used on the range.

The diagram below shows how the targets are normally connected to the receiver. This looks fairly obvious but when we get to “Advanced Operation” we will be using only selected target connectors and also deliberately misconnecting the targets to the wrong target connector on the receiver to achieve special effects.

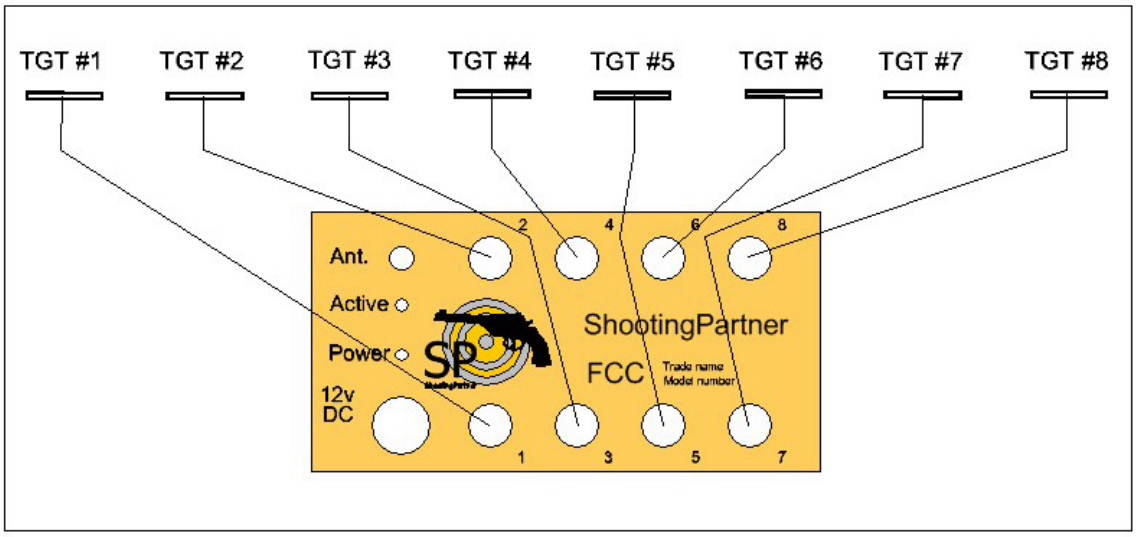

Display Group Functions

Please refer to the illustration of part of the "Control Panel" below.

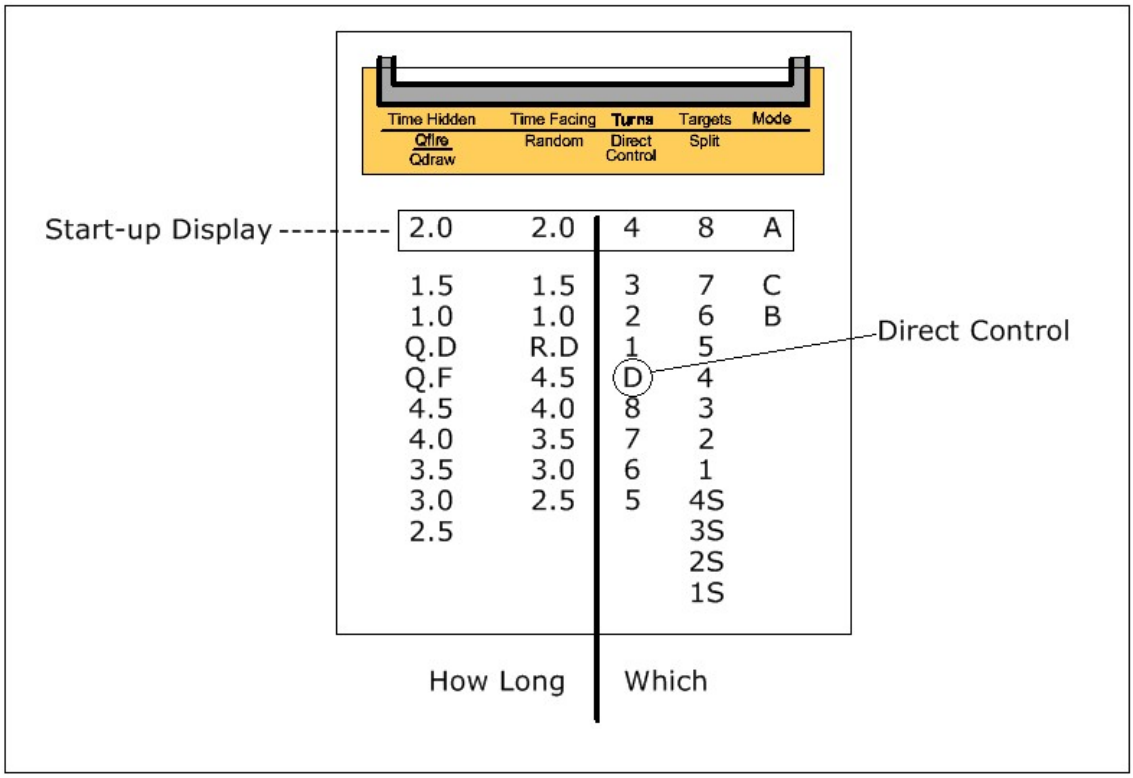

Note the following information.

1. The two left hand groups, “Time Hidden” and “Time Facing”, are time delay selections. These time delay selections will be applied to any other selections made on the control unit except during “Direct Control” mode. The names are rather clumsy but we needed generic names that would apply to all types of targets that the ShootingPartner control unit can operate. For example, “Time Hidden” covers both a turning target system, where the target is “edge on” during the “hidden” period and a “pop up” system, where the target is “laying flat” during the “hidden” period.
    a. “Time Hidden” refers to the period of time the target is not usable. With a turning target system this is the time the target is positioned edge-on to the shooter.
    b. “Time Facing” refers to the period of time the target is in a firing position.
2. The three right hand groups, “Turns”, “Targets” and “Mode”, are target selection functions. These groups decide which targets will move and what sequence they will move in.
    a. “Turns” refers to the number of times the targets will turn to face the shooter during a firing sequence.
    b. “Targets” refers to the number of targets in use during a firing sequence.
    c. “Mode” refers to special selections that over-ride the normal target operation to make it more challenging or to provide special capabilities.

In summary, the basic difference to remember between the two left hand groups and the three right hand groups on the display is that the left hand groups decide HOW LONG the targets will move for in a sequence. The right hand groups decide WHICH targets will move in the sequence. We show this on the illustration above. Although the different groups interact during a firing sequence for explanation purposes they can be considered separately and that is what we will now do. You will see that “Direct Control” is specifically marked on the illustration. This is because “Direct Control” over-rides some of both the HOW LONG and the WHICH selections. It is the only selection with this effect.

<u>Time Selection Groups – HOW LONG</u>

<u>“Time Hidden”</u>

This group provides 8 fixed time delays lasting between 1 second and 4.5 seconds in half-second increments. It also provides two random time delay selections, “Qdraw” and “Qfire”.
“Qdraw” (Quick Draw) is a special “Time Hidden” delay mode built into the control unit designed to be used during “drawing” practice. This mode permits adequate time for a shooter to re-holster his/her firearm between turns of the targets. Since re-holstering safely takes time “Qdraw” is a LONG time delay. It is a random time delay a minimum of 6.5 seconds in length.
“Qfire” (Quick Fire) is the other special “Time Hidden” delay mode built into the control unit designed to permit practice against rapidly moving targets. This mode permits

repeated target shots from the ready position. Since there is no need to re-holster the firearm and speed of response is the aim of the exercise “Qfire” is a SHORT delay. It is a random time delay between one second and four seconds.

“Time Facing”

This group provides 8 fixed time delays lasting between 1 second and 4.5 seconds in half-second increments. It also provides a random time delay selection, “R.D”.
“R.D” (Random) is a special “Time Facing” delay mode built into the control unit. This mode allows the time the target is facing the shooter to be decided by the control unit. It is a random time value between one and four seconds.

“Direct Control”

Although “Direct Control” is selected in the “Turns” group it actually controls target presentation times. Therefore, we will consider it in the HOW LONG section.
There will be occasions when the user will wish to have direct control of target operation. “Direct Control” overrides all other timing modes. This mode allows operation of the targets in co-ordination with a stopwatch to produce the longer target exposure times required in some competitions. In “Direct Control” simply press the “Start” button and the selected targets immediately appear, release the “Start” button and the targets immediately disappear.

Target Selection Groups – WHICH

“Turns”

This group allows the instructor to select how many times the targets will turn in a firing sequence. The values selected can be from one turn to eight turns. Only one press of the “Start” button is required to start this sequence. This group also permits selection of “Direct Control” mode, “D”. See explanation above.

“Targets”

This group allows the instructor to reduce the number of targets in use. The targets are taken out of operation from target 8 down to target 1 as per the following diagram. This allows the instructor to match the number of targets in use to the number of shooters. This extends the use of the stored air supply if portable air tanks are being used and removes the distraction of unwanted target movements for the remaining shooters. This group also allows the selection of “Split” mode which is designated by a number from 1 to 4 followed by the letter “S”.
The “Split” mode causes the group of eight targets to split itself into two groups of 4, 3, 2 or 1 targets as selected by the instructor. The characters displayed in the “Targets” group are “4S”, “3S”, “2S” and “1S”. This mode allows the shooter the opportunity to practice engaging multiple targets. For example, instead of eight shooters working with one target

each, two shooters could work with four targets each. The two groups of targets act in exactly the same manner providing fair competition between two shooters.

The following diagram shows how target operation changes in response to selections made in the “Targets” group.

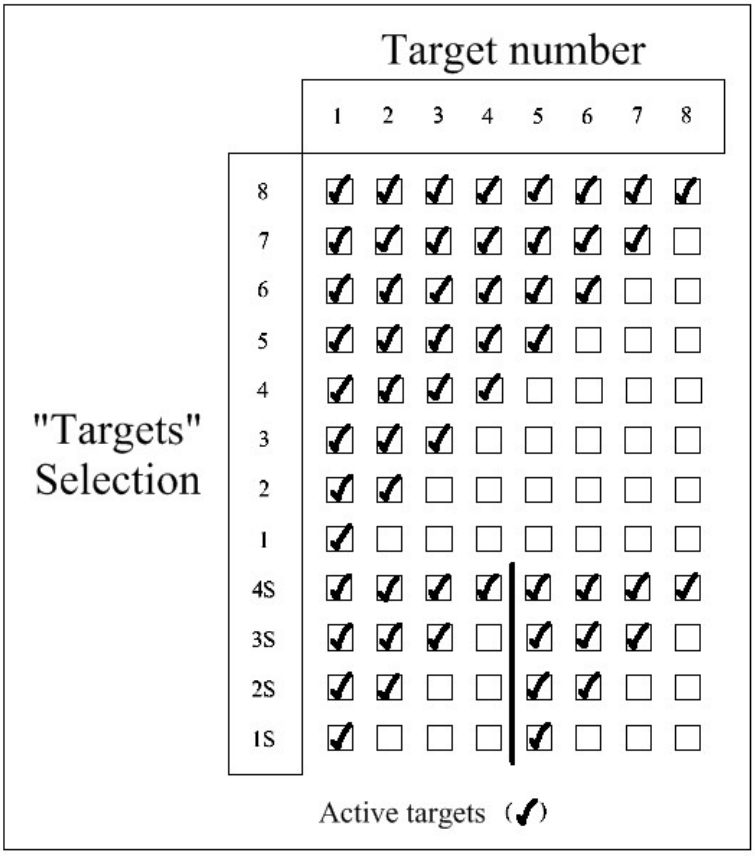

It would appear that “4S” would produce that same target movements as “8” but the “Modes” that can be selected alter this situation.

Modes A, B and C

The Modes, A, B, and C modify the actions of the targets chosen by the three modes above.
In Mode A all of the targets selected will be operated exactly as selected on the control panel. This is the standard mode of operation. All selected targets turn together.
In Mode B, ONE of the targets out of the group selected on the control panel will turn for each turn programmed on the control panel. The target that moves will be chosen at random. For example, if eight targets are selected to turn eight times with no split then what will actually happen is that with each turn instruction from the control unit only

ONE target will turn. On the next turn instruction another ONE target will turn but at each turn instruction the target to turn will be chosen at random.
Mode C is the same as Mode B except that TWO randomly chosen targets will turn at each turn instruction.

The changes caused by Modes B and C to the target movement selected on the control panel apply to both the “Targets” mode and the “Split” modes. Therefore, if a split of “4S” is chosen and Mode B is selected then TWO targets will turn, one in each split group. The process will repeat randomly. Similarly, if Mode C is chosen with a split of “Four” then FOUR targets will turn, TWO in each split group. They will be the same target in both groups.

By now you will probably be appreciating the tremendous training flexibility built into the ShootingPartner Wireless Firearm Training System. The good news is that it is very easy to select these various modes with the transmitter/control unit.
All built in modes of operation of the ShootingPartner wireless target control system have now been presented. Since these modes are all independently selectable and can be “mixed and matched” you will appreciate that there are hundreds of different training scenarios available from the control unit. By using “Advanced Options” the number of available scenarios can be increased even further.

ShootingPartner Advanced Operation.

To be continued !!!!!!!!!!!!!!

Appendix One

MAINTENANCE.

The ShootingPartner target system requires no routine maintenance. However, that does not mean you should abuse the equipment. For example, even if you purchased an underwater movie camera you would not deliberately leave it out in the rain. Your ShootingPartner target system should be kept under cover when it is not in use. This will reduce the chance of future problems.

You should pay particular attention to three items during the operation of your target. This attention will help to extend the trouble free life of your target system.

First, on the Heavy Duty target only, you will note that the vertical pivot shaft on the metal target frame has a black plastic cap at the top. This plastic cap prevents water from gaining access to the bearings of the unit and to the inside of the tubular frame assembly. Ensure this cap is in good condition and that it is kept in place at all times otherwise water may be trapped inside the rotating parts of the base leading to the eventual formation of rust inside the vertical pivot tube. We supply replacement caps if needed

Second, if you leave the target base out of doors with the air hose disconnected then put some form of cover over the air hose quick disconnect fitting to prevent bugs entering the pressure regulator.

Third, monitor the condition of the various pneumatic connections. Leaking air connections will cause loss of stored air from your portable air tank and reduce the number of target operations that you will get from a tank full of air.

After long use, or a misplaced bullet, you may need spare parts for your target system. We hold a full range of spare items and we supply fitting instructions for any spare parts you may need to install.

Air System.

Air Hose Quick Disconnect Fittings

Most of you will be familiar with air hose quick disconnect fittings. For those of you who are not so blessed, and who wish to make their own air hoses, here is a quick primer.
The center and right hand items shown in the photograph are “male” air hose fittings. The item shown on the left is a “female” air hose fitting. You will see that there are two common types of male fittings. We supply the type on the left of the two male fittings with the wider band at the tip. Similarly, there are two matching types of female fittings

but because of their construction you cannot see this from the outside. The type of fitting we use is generally referred to as the “automotive” pattern. You must use matching types of fittings in your target system or you will not be able to connect the air hoses.

The female quick disconnect fitting contains a valve assembly that prevents loss of air from the system when the fittings are disconnected. The female fitting must be used on the side of the air hose or air tank that is SUPPLYING the air. Therefore, on a simple system, there will be a female fitting on the air tank. There will then be a male fitting on one end of the air hose that connects with the female fitting on the air tank. The other end of the air hose has a female fitting that connects to a male fitting on the target frame. The air hose can therefore be conveniently removed from the target system without the use of wrenches and without loss of stored air.

You will note a knurled (rough) pattern on the female air fitting. To attach the male air fitting the knurled cylindrical body of the female fitting is pulled back against a spring (downwards in the photo) and the male air fitting is inserted. The cylindrical body of the female fitting is then released and the male fitting is locked in place. Similarly, the body of the female fitting must be pulled back to allow the male fitting to be removed after use.

Air Tank

On the stored air tanks we supply there is a fitting on the tank that allows filling of the tank, an air pressure gauge to monitor the contents, a regulator and a quick disconnect air supply fitting. There is also a small valve assembly to turn the air “on” and “off”. The use of the gauge and the on/off valve are self-evident. The regulator on the air tank is preset before shipping and it should not be adjusted. The quick disconnect air supply fitting should prevent loss of air from the tank even if the on/off valve is left “on”, that is part of its job. However, it is good practice to turn “off” the valve on the air tank if the target system will not be used for a period of time. Quick disconnect fittings tend to leak very

slightly and over a long period of time the pressure in your tank will be lost. The tank filler connection usually accepts a normal automobile tire inflation connector. This allows your tank to be filled at any automobile gas station or from your home compressor. Do not fill the air tank in excess of its rated pressure or over 125 pounds per square inch.

Air Hose Connections

If you use a stored air tank for your shooting session you must ensure that all of the air connections in the system are sealed correctly. Otherwise the air will escape from the tank and the number of operations of the target system will be much reduced. If you make your own air hoses use a sealant on the connector threads to reduce air loss. Check the air supply connections on the target for leaks. This can be done in two ways. The first way is by listening for escaping air (if you can hear air escaping there is a major leak). The second way is by applying soapy liquid to the fittings, soap bubbles appearing and bursting indicate a leak (a very slow leak is acceptable). If leaks occur it is usually at the ends of the flexible black nylon tubing. This tubing tends to loose its flexibility over time and allow air leakage. These leaks can be cured by replacing the tubing. We supply the tubing plus simple fitting instructions.

Air Regulator Adjustment (Heavy Duty Target Only).

There is an adjustable air regulator mounted on the target frame of your ShootingPartner system. This regulator adjusts the air pressure applied to the pneumatic cylinder and it determines how fast, and hard, the target moves during rotation. The output of the pressure regulator is set to 17 pounds per square inch before we ship the target. This is usually the optimum setting. We then mark the control knob and the body of the regulator with two “dots” to allow the regulator to be easily reset to 17 pounds per square inch should it be adjusted for any reason. THERE WILL BE NO NEED TO TURN THE REGULATOR KNOB MORE THAN ¼ TURN FROM THE MARKED POSITION IN EITHER DIRECTION. The regulator may need to be adjusted slightly to compensate for different target types, such as two targets mounted on one frame. If this is so, adjust the regulator for the minimum pressure required to provide satisfactory turning rate of the target. Unnecessarily high pressure causes extra wear and tear on the target frame, causes paper targets to tear off the frame, loosens the joints in the wooden frame and increases air consumption so that you get less target operations per tank full of air. To adjust the regulator pull “out” the black plastic knob then turn the knob clockwise to increase air pressure or anti-clockwise to reduce air pressure. When the correct pressure is set push the black knob back into position. You will feel it “click” into place.

Appendix Two.

Wooden Target Frame (Heavy Duty Target Only).

Keep the wooden packing pieces attached to the bottom of your target frame during delivery. These pieces can be used as spare frame rails when needed.

The wooden target frame can be cut and assembled to fit the type of target you use. We will provide dimensions of some target types we have used successfully. You will soon get ideas for your own needs. The frames are made from 1½-inch cedar for the uprights (which really is 1½ inches across) and 1x4 pine for the rails (which is actually ¾ inch by 3½ inches as per lumber industry standard). Dimensions are not critical.

To assemble the "standard" target frame the easiest method is as follows. Place the two uprights into the metal target frame. Hold the upper 1x4 rail in position so that its top is level with the top of the uprights and the outer faces of the uprights are lined up with the outer ends of the 1x4. Screw the rail in place (you may need a helper, or a clamp, to hold the rail in position while you put in the screws). Attach the two vertical 1x4s. Attach the lower 1x4 rail. Target frame assembly is now complete.

Standard Paper Target Frame (as supplied)

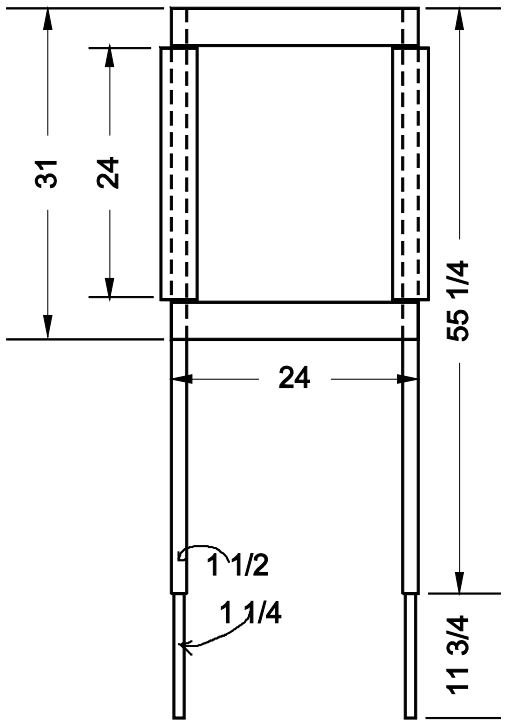

This frame consists of two uprights that are reduced in size at the bottom so that they fit quite tightly into the metal target frame. Four 24 inch long 1x4s are fastened to the uprights to provide an area to staple the paper target into position. This is a very sturdy frame and it can be modified to carry more than one target (see later). Fits most rectangular paper silhouette targets.

IPSC Cardboard Target Frame

This frame consists of four 1½ inch uprights. The bottom uprights, which fit into the metal frame, are the same as those of the standard wooden frame except that they are cut to 23½ inches length. (When you have shot the top of your standard frame to pieces you can cut down the uprights and make an IPSC frame!) The frame uses two 1x4 rails, one at the front of the frame and one at the back to ensure rigidity. These rails are attached by screws so that they are level with the top of the short uprights. These 1x4s could be salvaged from a used standard frame also. If you are making this frame from the new materials supplied with the target package then cut the supplied uprights into two with the lower section being 23½ inches long. The longer sections of the uprights are then fastened into the box section created by the 1x4s as shown. They are set 18 inches apart so that a cardboard IPSC target can be stapled into position.

Multiple Target Frames.

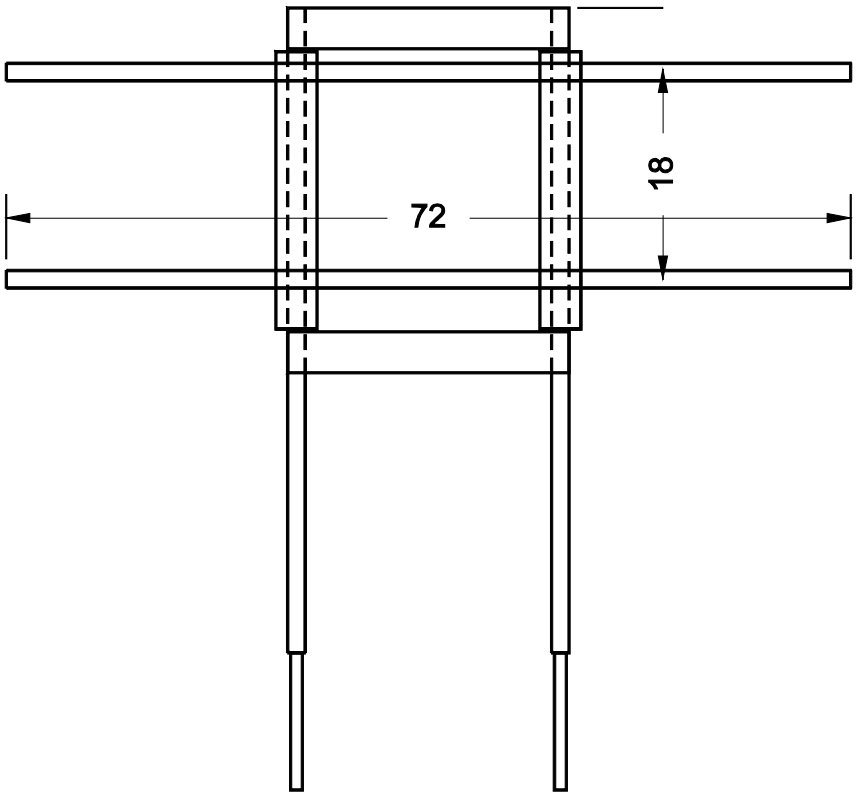

Horizontal arms of 1x2 wood up to 72 inches long can be attached to the standard target. These arms can be “one sided” or “double sided” (see our Website Photo Gallery for examples). We recommend you use the one-piece uprights from the standard frame for this target because they are stronger than the two-piece IPSC uprights. If you use paper targets on this style of frame you will need to back the paper targets with cardboard to prevent them from tearing loose under the high turning forces involved.

Appendix Three.

Trouble Shooting (that's a pun, get it?)

No Targets Turn

If the **NONE** of the targets move when the transmitter is operated follow these procedures. If a problem is found during a procedure correct the problem immediately, then repeat the tests until correct target operation is resumed.

1. Check the air pressure in the supply tank (it should be 20 psi minimum). Confirm the air supply is turned "On" at the tank. Check the air hose connections between the air tank and the targets.
2. Check that the red "Power" light on the receiver is illuminated.
   a. If the red "Power" light on the receiver is not illuminated, continue with the "Electrical problems" section below.
   b. If the red "Power" light is illuminated, continue by checking all of the electrical connections between the receiver and the targets. Then continue with the next action below.
3. If the red "Power" light on the receiver is illuminated and the air supply appears to be satisfactory do the following.
   a. On a convenient target locate the electrical air valve. This is the small black and silver rectangular unit that has three thin black plastic air-lines connected to it. On this air valve locate the manual test button. This is a small chrome button a little less than ¼ inch in diameter located on the face of the air valve that is furthest away from the target frame (nearest to you as you look at the target). It is towards the left end of the valve near to the black plastic end where the electrical connections enter the valve. Take great care to keep away from the movement area of the target frame because the target is likely to move when the button is pressed. Press in the manual test button. If the target moves the problem is in the "electrical" part of the target system. If the target does not move the problem is in the "air" part of the target system.

Continue following the appropriate procedures below.

"Air" problems

1. Recheck the tank air pressure and that the air supply is turned on. Then, remove the "quick disconnect" air hose connection at the air tank. There should be a short but positive sound of escaping air as the fitting is removed. If you are not sure air escaped from the air hose you can repeat this test several times. If there is no sound of escaping air then there is a fault with the tank air valve or the tank pressure gauge. Try using another tank if one is available or recharge the present

tank to be sure it contains air then try the test again. If this does not solve the problem the tank air valve will need to be replaced, a most uncommon problem.

2. If there is a sound of escaping air at the tank when you remove the "quick disconnect" try the same test at a target. If there is the sound of escaping air at the tank "quick disconnect" but not at the target "quick disconnect" then the air pressure regulator has failed, probably due to contamination of the small air passages it contains. If you can be sure no one has caused a problem by tampering with the regulator the regulator will need to be replaced. See the note under "Maintenance" about protecting the air system connections when the target system is not in use.

"Electrical" problems

1. Check the red "Power" light on the receiver. If it is not illuminated check that the electrical supply to the receiver is connected correctly (particularly that the battery clips are connected to the correct terminals on the battery) and that the battery, if you are using a battery, is sufficiently charged. Try replacing the electrical supply causing the problem, whether it is a battery or mains power supply, with an alternative such as another battery. If this is not possible test the receiver by disconnecting the receiver from the targets, taking it to a nearby car, and connecting it to a car battery using the supplied battery connector cables. If these tests do not cause the red "Power" light to illuminate there is a serious internal fault in the unit. Since the receiver unit contains several protective devices a complete failure of the receiver unit is most unlikely.
    a. It should be noted that the ShootingPartner receiver will actually run on any DC power supply from 12 to 24 volts. If you are stuck in the middle of a range training session with a low battery then any car or motorcycle battery can be pressed into temporary use.
2. If the red "Power" light is illuminated stand close to the receiver with the transmitter in hand. Turn on the transmitter and select the "Direct Control" mode. Press the "Start" button. If the red "Power" light goes out or flickers during this test it indicates that the battery in use has a very low state of charge. The battery charge is sufficient to power the receiver, which needs very little electricity, but it is not charged enough to operate the electrical air valves since they require much more power.

    If the red "Power" light remains steadily illuminated during this test the yellow/green "Active" light should illuminate while the "Start" button is pressed. If this light illuminates the transmitter and the receiver are working correctly and they are "talking" to each other.
    a. Check that the "receiver to target" cables are connected properly at both ends. Remove and replace both connections.
    b. Remove the air hose "quick disconnect" at a convenient target to prevent the target turning. Lightly place a finger on the electrical air valve at the target. The transmitter should still be in "Direct Control" mode. When the transmitter "Start" button is pressed you should feel a very faint motion and perhaps hear a faint "click" from the air valve. Because the motion is very faint the test does not prove 100% that there is a fault if the motion is

not felt. However, if the motion is felt it is an almost certain indication that the problem is in the air supply part of the air valve. Once again the problem is probably due to contamination of the small air passages in the valve.