DATE	REVISION NUMBER	INITIALS	DESCRIPTION
11/8/04	245-01316-020	AD	Initial Design Based on TB138-020
11/9/04	245-01316-021	AD	Corrected reference designators C5, C10, C364 to L7, L8, C64 to match 020 PCB
11/23/04	245-01316-030	AD	Moved bottom layer traces to third layer and added shield symbol Changed to NEC LNA
12/7/04	245-01316-040	AD	Changed C51 and C59 to 100pF and move them closer to switch Changed 2GHz Rx tuning L18 to 1.8pF and C16 to 0.5pF
12/10/04	245-01316-050	AD	ANTA, ANTB decoupling caps C51, C59 to 1pF and comb-filter caps to 2.7pF Added 2 decoupling caps on ANTA and ANTB lines: C118 and C119
12/15/04	245-01316-051	AD	Corrected Q4 part number typo Changed the comb-line filter caps from 2.7pF to 3.0pF (x6)
1/24/04	245-01316-052	AD	Changed MPCI mode R14 from R to 10k Changed C38 and C39 from 1pF to 0.75pF to improve stability of 5GHz xPA

MB62 - AR5006X 802.11a/b/g Mini PCI Reference Design. BGA Version.

ATHEROS CONFIDENTIAL

PRELIMINARY

ATHEROS CONFIDENTIAL
PRELIMINARY

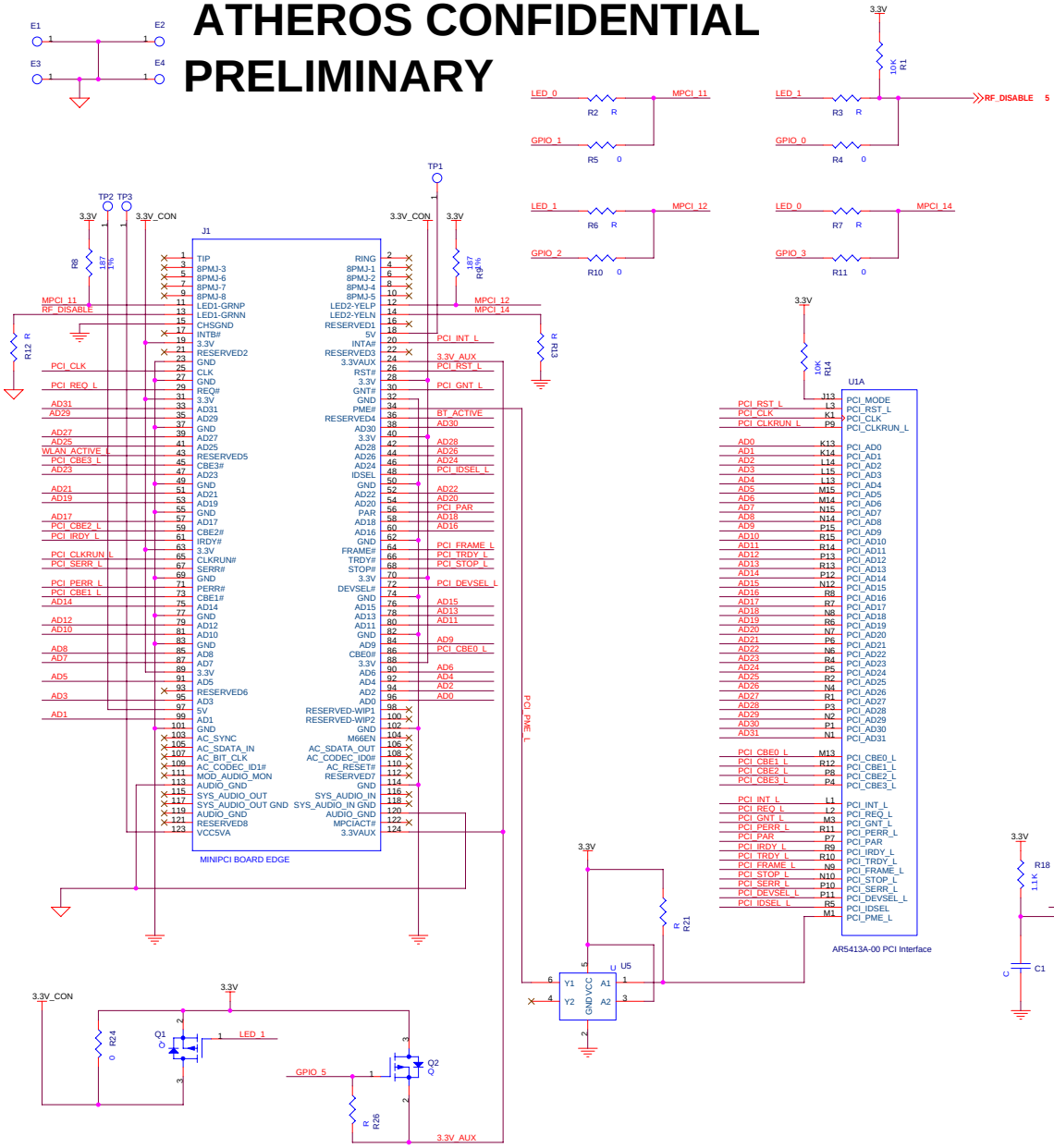

To Enable WAKE ON WLAN

Stuff Q1 and Q2 with IRLML6401
Stuff R26 and R21 with 10k
Stuff R19 with 0ohm
Stuff U5 with NC7WZ07
Remove R24

Atheros Communications, Inc. 529 Almanor Avenue Sunnyvale, CA 94085			Title	Mini PCI - AR5413	
Date Tuesday, January 25, 2005	Size C	Rev 001	Sheet 3 of 7		DWG NO 245-01316-052

ATHEROS CONFIDENTIAL
PRELIMINARY

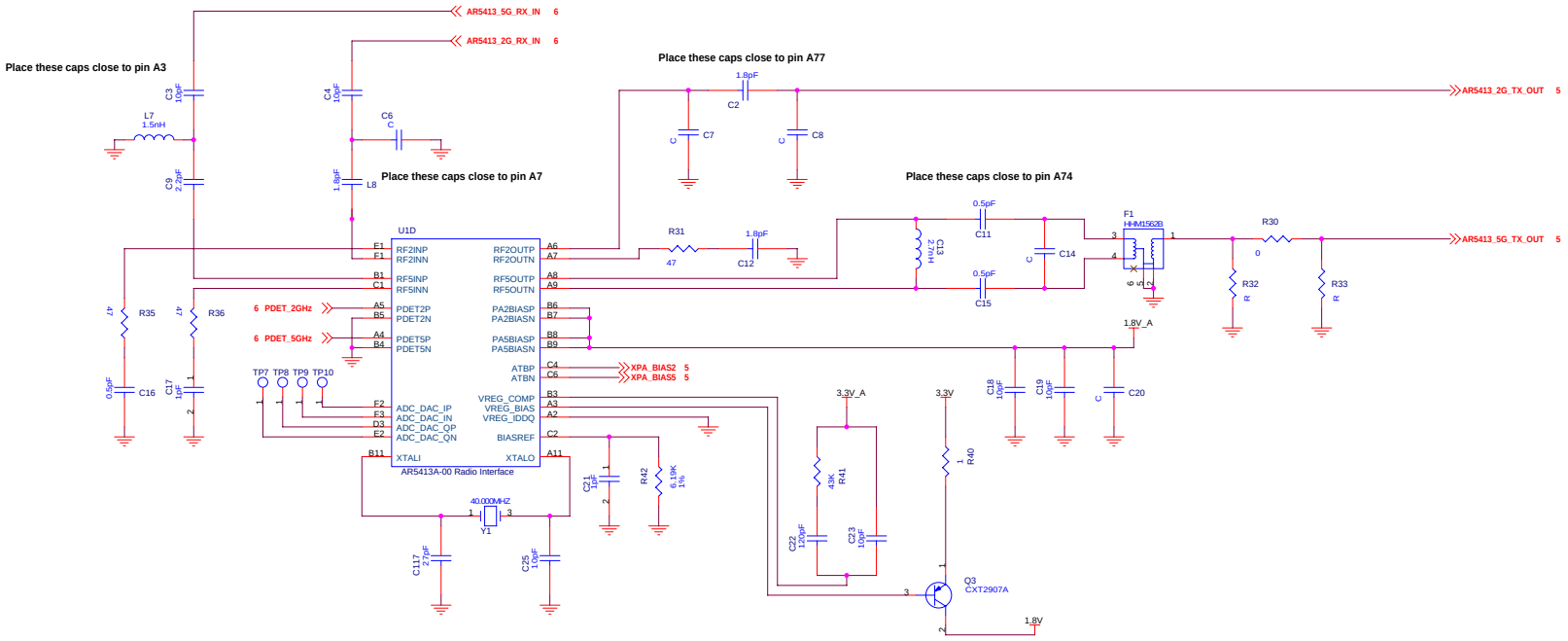

Atheros Communications, Inc. 529 Almanor Avenue Sunnyvale, CA 94085				Title MiniPCI - AR5413	
Date Tuesday, January 25, 2005	Size C	Rev 000	Sheet 4 of 7		DWG NO 245-01316-052

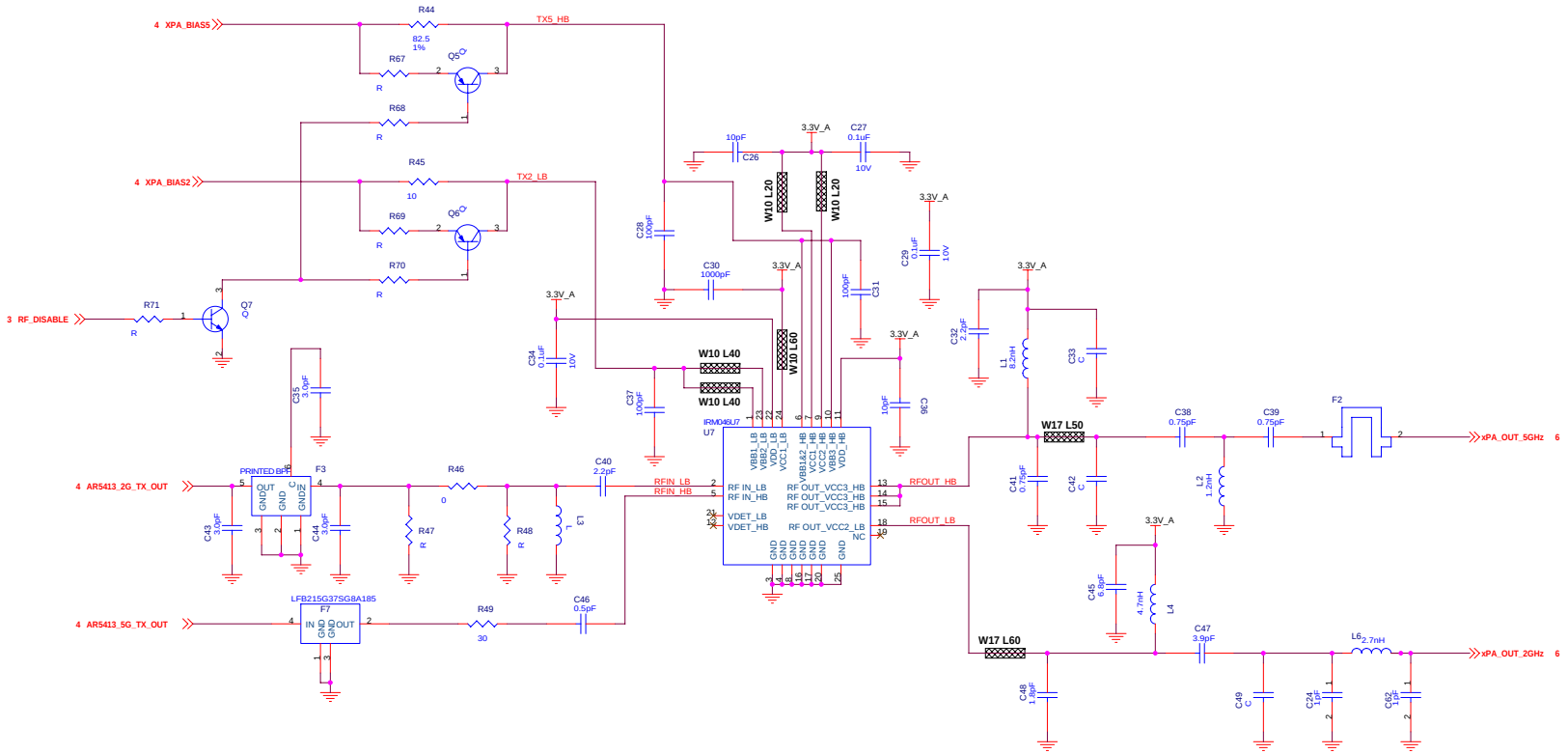

ATHEROS CONFIDENTIAL
PRELIMINARY

Atheros Communications, Inc. 529 Almanor Avenue Sunnyvale, CA 94085				Title	Mini PCI - Radio Front End	
Date Tuesday, January 25, 2005	Size C	Rev 000	Sheet 5 of 7		DWG NO 245-01316-052	

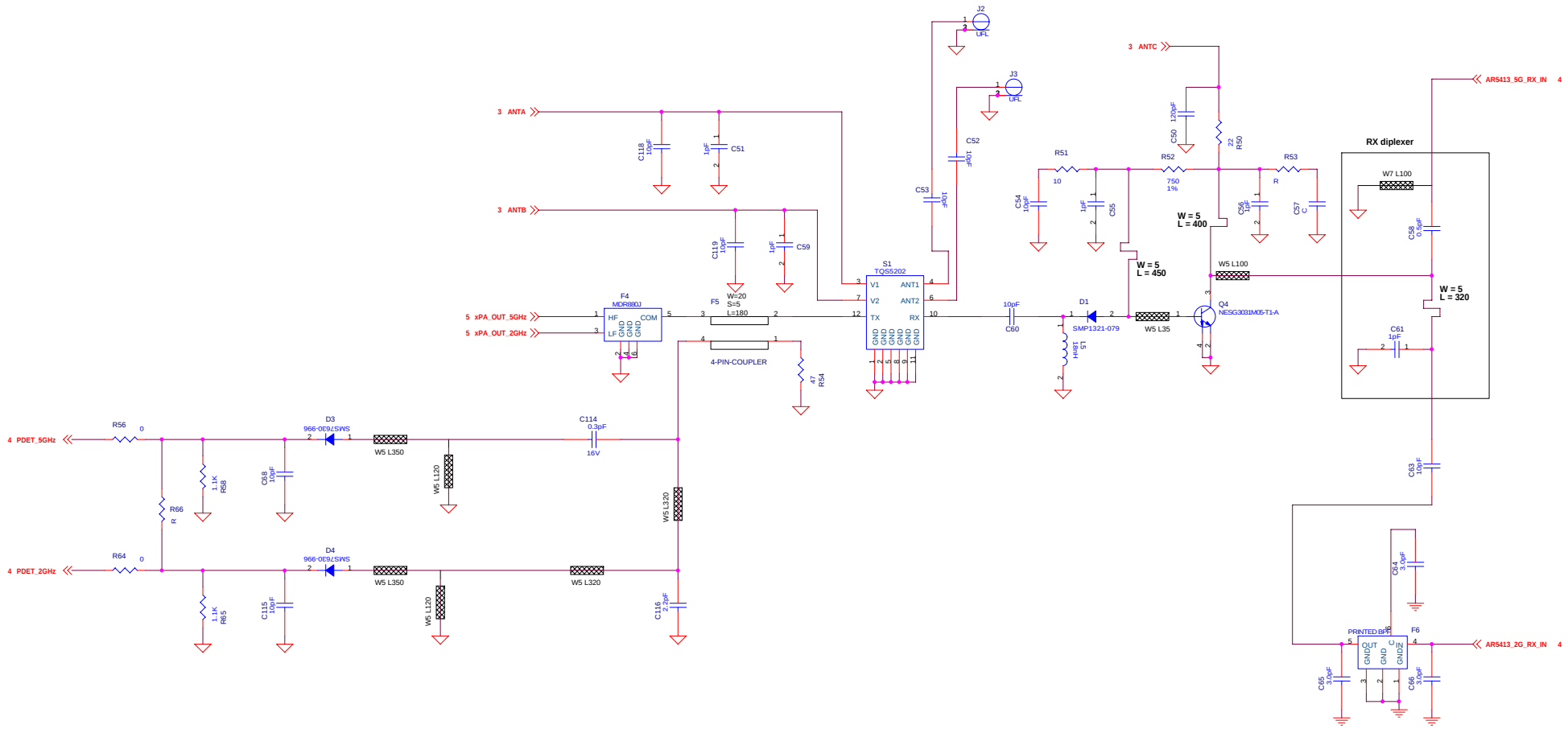

ATHEROS CONFIDENTIAL
PRELIMINARY

Atheros Communications, Inc. 529 Almanor Avenue Sunnyvale, CA 94085			Title	Mini PCI - Radio Front End	
Date Tuesday, January 25, 2005	Size C	Rev 000	Sheet 6 of 7		DWG NO 245-01316-052

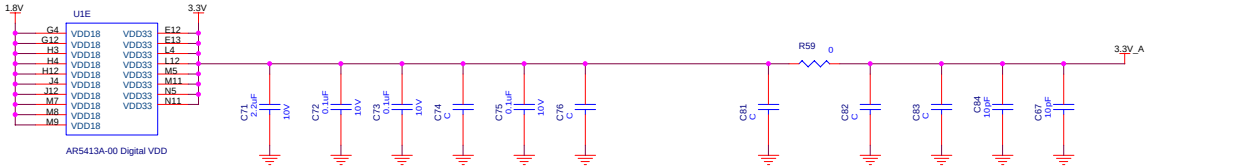

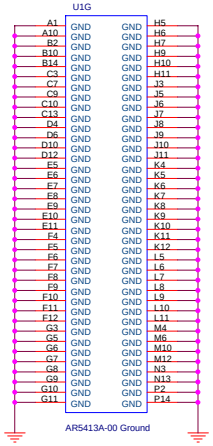

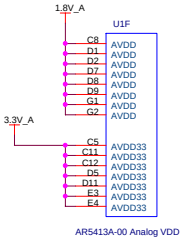

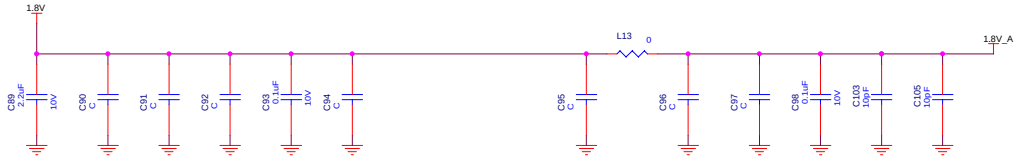

ATHEROS CONFIDENTIAL
PRELIMINARY

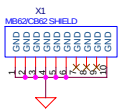

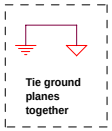

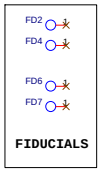

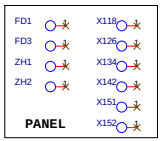

Atheros Communications, Inc. 529 Almanor Avenue Sunnyvale, CA 94085				Title	Mini PCI - Power and Miscellaneous	
Date Tuesday, January 25, 2005	Size C	Rev 001	Sheet 7 of 7		DWG NO 245-01316-052	