Measurement Report

Part 15 Subpart B & C (15.247)
Part 15 Subpart E (15.407)
ANSI C63.4-2003

Product ..... ***: Wireless-AG Network Mini PCI Adapter***
Applicant ..... ***: Compex Systems Pte Ltd.***
FCC ID ..... ***: TK4-05-WLM54AG***
Trade Name ..... ***: Compex***
Model No. ..... ***: IWAVEPORT WLM54AG***
Report No. ..... ***: MLT0508P15001***
Issue Date ..... ***: September 30,2005***

Test By

Max Light Technology Co.,Ltd.

Room 5, 8F, No.125, Section 3 Roosevelt Road,

Taipei, Taiwan., R.O.C.

Tel: 886-2-2363-2447 Fax: 886-2-2363-2597

The test report consists of 143 pages in total. It may be duplicated completely for legal use with the allowance of the applicant. It shall not be reproduced except in full, without the written approval of our laboratory.

Table of Contents :

I. General ---------- 4.

II. Conducted Emissions Requirements ---------- 10.

III. Radiated Emissions Requirements ---------- 20.

IV. For 802.11b/g 2400MHz – 2483.5MHz ---------- 42
1. Maximum Conducted Output Power Requirements ---------- 42
2. Minimum 6dB RF Bandwidth Requirements ---------- 50.
3. Maximum Power Density Requirements ---------- 58.
4. Out of Band Conducted Emissions Requirements ---------- 66.
5. Band Edges Requirements ---------- 98.

V. For 802.11a 5150MHz – 5350MHz ---------- 101
1. Emission bandwidth Requirements ---------- 101
2. Peak Transmit Power Requirements ---------- 106.
3. Peak Power Spectral Density Requirements ---------- 112.
4. Peak Excursion Requirements ---------- 117.
5. Band Edges Requirements ---------- 122.
6. Frequency Stability Requirements ---------- 126.

VI. For 802.11a 5725MHz – 5850MHz ---------- 128
1. Peak Transmit Power Requirements ---------- 128
2. Minimum 6dB RF Bandwidth Requirements ---------- 130.
3. Maximum Power Density Requirements ---------- 134.
4. Band Edges Requirements ---------- 138.

VII. Antenna Requirements ---------- 141.

Appendix I (EUT Test Setup) ---------- 142.

CERTIFICATION

We here by verify that :

The test data, data evaluation, test procedures and equipment configurations shown in this report were made in accordance with the procedures given in ANSI C63.4: 2003. All test were conducted by *MLT (Max Light Technology Co., Ltd) Room 5, 8F, No.125, Section 3 Roosevelt Road, Taipei, Taiwan, R.O.C* Also, we attest to the accuracy of each.

We further submit that the energy emitted by the sample EUT tested as described in the report is in compliance with Class B radiated and conducted emission limit of FCC Rules Part 15 Subpart B & C (15.247) and Part 15 SubpartE (15.407).

EUT	: Wireless-AG Network Mini PCI Adapter
Applicant	: Compex Systems Pte Ltd. 135, Joo Seng Road, #08-01 PM Industrial Building Singapore 368363
Manufacturer	: Compex Systems Pte Ltd. 135, Joo Seng Road, #08-01 PM Industrial Building Singapore 368363
Model No	: IWAVEPORT WLM54AG
FCC ID	: TK4-05-WLM54AG

Prepared by : Jesse Tien *Approved by :* Roger Chen

Jesse Tien Roger Chen

I. GENERAL

1.1 Introduction

The following measurement report is submitted on behalf of Compex Systems Pte Ltd. In support of a Class B Digital Device certification in accordance with Part2 Subpart J and Part 15 Subpart A And B&C&E of the Commission's and Regulations.

1.2 Description of EUT

EUT	: Wireless-AG Network Mini PCI Adapter
Applicant	: Compex Systems Pte Ltd. 135, Joo Seng Road, #08-01 PM Industrial Building Singapore 368363
Manufacturer	: Compex Systems Pte Ltd. 135, Joo Seng Road, #08-01 PM Industrial Building Singapore 368363
Model No	: IWAVEPORT WLM54AG
FCC ID	: TK4-05-WLM54AG
Power Type	: Powered by PC(Via +3.3Vdc)
Frequency of Channel	: See Next page
Type of Modulation	: Direct Sequence Spread Spectrum
Type of Antenna	: 1/4 λDIOPLE Antenna

During testing the EUT was operated at Tx or Rx mode for each emission measured. This was done in order to ensure that maximum emission levels were attained.

Frequency of Each Channel / 802.11b (Working Frequency)

Channel No.	Frequency (MHz)
01	2412
02	2417
03	2422
04	2427
05	2432
06	2437
07	2442
08	2447
09	2452
10	2457
11	2462

Frequency of Each Channel / 802.11g (Working Frequency)

Channel No.	Frequency (MHz)
01	2412
02	2417
03	2422
04	2427
05	2432
06	2437
07	2442
08	2447
09	2452
10	2457
11	2462

Frequency of 5150MHz ～5250MHz ,
5250MHz ～5350MHz (Working Frequency)

Channel No.	Frequency (MHz)
01	5180
02	5200
03	5220
04	5240
05	5260
06	5280
07	5300
08	5320

Frequency of 5725MHz ~ 5850MHz (Working Frequency)

Channel No.	Frequency (MHz)
09	5740
10	5760
11	5780
12	5800
13	5820
14	5840

1.3 Summary Of Tests

For frequency 2.4GHz

47 CFR Part 15 Subpart C			
Reference	Test	Results	Note
15.207	AC Power Conducted Emission	PASS	
15.247(c)	Transmitter Radiated Emissions	PASS	(1)
15.247(b)	Max. Output Power	PASS	
15.247(a)(2)	6dB RF Bandwidth	PASS	
15.247(d)	Max. Power Density	PASS	
15.247(c)	Out of Band Conducted Spurious Emission	PASS	
15.247(c)	Band Edge Measurement	PASS	
15.203	Antenna Requirement	PASS	

Note: (1) The IWAVEPORT WLM54G 802.11b (CH01/CH06/CH11) & 802.11g (CH01/CH06/CH11) have been pre-tested, the testing report only record the worst cases which were 802.11b (CH06) and 802.11g (CH01).

For frequency 5150MHz – 5350MHz

47 CFR Part 15 Subpart E			
Reference	Test	Results	Note
15.407(b)(5)	AC Power Conducted Emission	PASS	
15.407(b/1/2/3)(b)(5)	Electronic Filed Strength Spurious, 30MHz ~ 40GHz	PASS	
15.407(a/1/2/3)	Peak Transmit Power	PASS	
15.407(a)(6)	Peak Power Excursion	PASS	
15.407(a/1/2/3)	Peak Power Spectral Density	PASS	
15.407(g)	Frequency Stability	PASS	

For frequency 5725MHz – 5850MHz

47 CFR Part 15 Subpart C			
Reference	Test	Results	Note
15.207	AC Power Conducted Emission	PASS	
15.247(c)	Transmitter Radiated Emissions	PASS	
15.247(b)	Max. Output Power	PASS	
15.247(a)(2)	6dB RF Bandwidth	PASS	
15.247(d)	Max. Power Density	PASS	
15.247(c)	Band Edge Measuremen	PASS	

1.4 Description of Support Equipment

In order to construct the minimum system which required by the ANSI C63.4-2003, following equipments were used as the support units.

Computer : IBM
Model No. : 16W
Serial No. : BNL345M
FCC ID : FCC DOC

Monitor : IBM
Model No. : 10L6145 030
Serial No. : 23-092079
FCC ID : FCC DOC

Keyboard : IBM
Model No. : KB-9930
Serial No. : 09N5395
FCC ID : FCC DOC

Mouse : IBM
Model No. : 0180-05N
Serial No. : 23-96142
FCC ID : EMJMUSJJ

Modem : ASKEY
Model No. : WS1414SV
Serial No. : N/A
FCC ID : FCC DOC

Printer : PANASONIC
Model No. : KX-P1080I
Serial No. : TCKAKE93933
FCC ID : FCC ID: ACJ5Z6KX-P1080I

1.5 Configuration of System Under Test

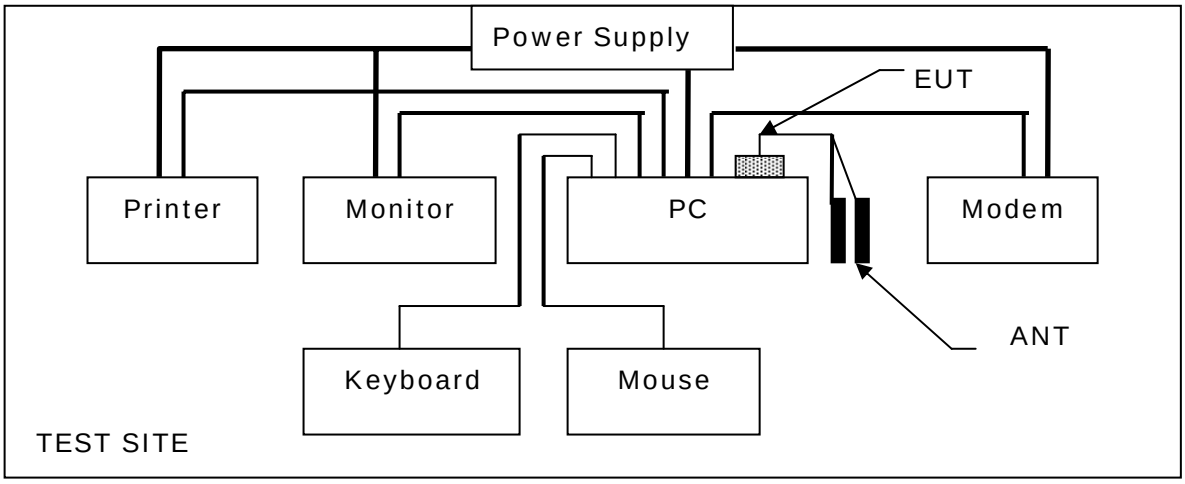

During testing the EUT (Wireless Adapter) 's Mini PCI interface via a PCMCIA to mini-PCI extender connected to the Desktop PC, and the monitor/modem/keyboard/mouse/printer connected to desktop's PC I/O port.

1.6 Test Procedure

All measurements contained in this report were performed according to the techniques described in Measurement procedure ANSI C63.4-2003 "Measurement of un-Intentional Radiators.

1.7 General Test Condition

The conditions under which the EUT operates were varied to determine their effect on the equipment's emission characteristics. The final configuration of the test system and the mode of operation used during these tests were chosen as that which produced the highest emission levels. However, only those conditions which the EUT was considered likely to encounter in normal use were investigated. The system's radiated and conducted emissions were investigated while the computer alternately transferred data to the EUT as well as to the monitor and printer. Using a test program which sent a continuous data and transferred data to and from the EUT was proven to worst case emissions. The system's physical layout and cabling was randomly arranged to ensure that maximum emission levels were attained.

II. Conducted Emissions Requirements

2.1 General & Setup :

The power line conducted emission measurements were performed in a shielded enclosure. The EUT was assembled on a wooden table which is 80 centimeters high, was placed 40 centimeters from the back wall and at least 1 meter from the sidewall.

Power was fed to the EUT from the public utility power grid through a line filter and EMCO Model 3825/2 Line Impedance Stabilization Networks (LISN). The LISN housing, measuring instrumentation case, ground plane, etc., were electrically bonded together at the same RF potential. The Spectrum analyzer was connected to the AC line through an isolation transformer. The 50-ohm output of the LISN was connected to the spectrum analyzer directly. Conducted emission levels were in the CISPER quasi-peak detection mode. The analyzer's 6 dB bandwidth was set to 9 KHz. No post-detector video filter was used.

The spectrum was scanned from 150 KHz to 30 MHz. The physical arrangement of the test system and associated cabling was varied (within the scope of arrangements likely to be encountered in actual use) to determine the effect on the unit's emanations in amplitude and frequency. All spurious emission frequencies were observed. The highest emission amplitudes relative to the appropriate limit were measured and have been recorded in paragraph 2.6.

2.2 Test Equipment List:

A. EMCO 3825/2 LISN (S/N:2654)
B. EMCO 3825/2 LISN (S/N:2658)
C. HP 8591EM 9KHZ-1.8GHz Spectrum Analyzer (S/N:73412A00110)
D. R&S ESH3 Test Receiver (S/N:892108/025)
E. Shielded Room (MLT-SR1)

2.3 Test Configuration:

Front View of The Test Configuration

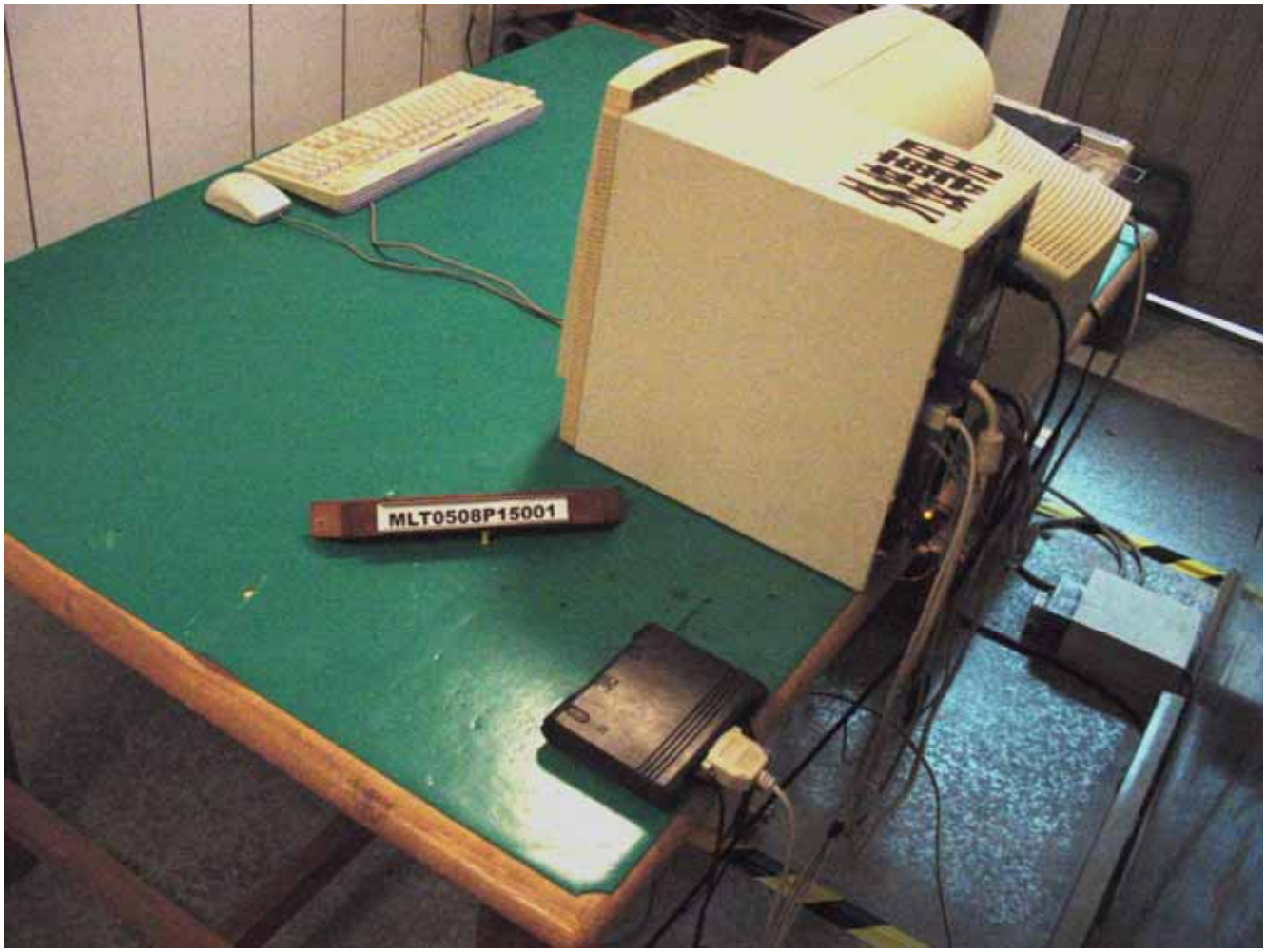

Rear View of The Test Configuration

2.4 Test condition:

EUT tested in accordance with the specifications given by the manufacturer , and exercised in the most unfavorable manner.

2.5 Conducted Emissions Limits:

Frequency range (MHz)	Limits (dBuV)	
	Quasi-peak	Average
0.15 to 0.50	66 to 56	56 to 46
0.50 to 5.0	56	46
5.0 to 30	60	50

2.6 Measurement Data Of Conducted Emissions:

2.6.1 Conducted Emissions (Subpart B & C)

The following table show a summary of the highest emissions of power line conducted emissions to the HOT and NATURAL conductor of the EUT power.

Applicant : *Compex Systems Pte Ltd.*
Model No : *IWAVEPORT WLM54AG*
EUT : *Wireless-AG Network Mini PCI Adapter*
Test Mode : *802.11b (CH01)*
Test Date : *09/22/2005*

Power Line Conducted Emissions (Class B)					
Conductor	Frequency (MHz)	Quasi-Peak (dBuV)	Limits	Average (dBuV)	Limits
L1	0.21	52.55	63.01	42.58	53.01
	1.40	51.26	56	41.25	46
	3.26	46.88	56	37.68	46
	4.82	48.82	56	39.98	46
	8.28	50.51	60	--	50
	16.23	47.75	60	--	50
	21.04	48.72	60	--	50
L2	0.21	57.11	63.18	48.96	53.18
	0.31	51.22	59.75	41.53	49.75
	0.63	42.62	56	--	46
	1.40	50.19	56	41.77	46
	3.16	46.15	56	39.69	46
	4.75	47.90	56	40.24	46
	8.41	49.43	60	41.73	50

Notes :
1. L1: One end & Ground L2: The other end & Ground
2. Height of table on which the EUT was placed : 0.8 m.
3. The Quasi-Peak Value have already met the Average Value Limit showed on above limits.
4. The above test results are obtained under the normal condition.

2.6.2 Conducted Emissions (Subpart B & C)

The following table show a summary of the highest emissions of power line conducted emissions to the HOT and NATURAL conductor of the EUT power.

Applicant : *Compex Systems Pte Ltd.*
Model No : *IWAVEPORT WLM54AG*
EUT : *Wireless-AG Network Mini PCI Adapter*
Test Mode : *802.11b (CH06)*
Test Date : *09/22/2005*

Power Line Conducted Emissions (Class B)					
Conductor	Frequency (MHz)	Quasi-Peak (dBuV)	Limits	Average (dBuV)	Limits
L1	0.21	52.80	63.18	41.57	53.18
	0.31	47.42	59.75	--	49.75
	0.52	43.24	56	--	46
	1.40	50.82	56	40.73	46
	3.28	46.68	56	37.43	46
	4.75	50.71	56	41.77	46
	8.37	49.88	60	40.76	50
L2	0.21	56.97	63.18	49.53	53.18
	0.31	51.28	59.75	45.86	49.75
	0.63	42.62	56	--	46
	1.40	48.11	56	40.84	46
	3.16	45.88	56	38.75	46
	4.77	49.39	56	41.78	46
	8.37	49.38	60	42.43	50

Notes :
1. L1: One end & Ground L2: The other end & Ground
2. Height of table on which the EUT was placed : 0.8 m.
3. The Quasi-Peak Value have already met the Average Value Limit showed on above limits.
4. The above test results are obtained under the normal condition.

2.6.3 Conducted Emissions (Subpart B & C)

The following table show a summary of the highest emissions of power line conducted emissions to the HOT and NATURAL conductor of the EUT power.

Applicant : *Compex Systems Pte Ltd.*
Model No : *IWAVEPORT WLM54AG*
EUT : *Wireless-AG Network Mini PCI Adapter*
Test Mode : *802.11b (CH11)*
Test Date : *09/22/2005*

Power Line Conducted Emissions (Class B)					
Conductor	Frequency (MHz)	Quasi-Peak (dBuV)	Limits	Average (dBuV)	Limits
L1	0.21	52.94	63.18	42.75	53.18
	0.31	46.84	59.75	--	49.75
	1.40	50.95	56	41.87	46
	3.12	46.03	56	39.77	46
	4.72	50.29	56	41.84	46
	8.37	49.71	60	40.53	50
	21.04	47.90	60	--	50
L2	0.21	56.94	63.18	47.86	53.18
	0.31	51.17	59.93	42.77	49.93
	1.41	47.89	56	40.53	46
	3.16	46.43	56	38.78	46
	4.82	53.12	56	41.66	46
	8.28	49.34	60	40.30	50
	21.04	48.44	60	--	50

Notes :
1. L1: One end & Ground L2: The other end & Ground
2. Height of table on which the EUT was placed : 0.8 m.
3. The Quasi-Peak Value have already met the Average Value Limit showed on above limits.
4. The above test results are obtained under the normal condition.

2.6.4 Conducted Emissions (Subpart B & C)

The following table show a summary of the highest emissions of power line conducted emissions to the HOT and NATURAL conductor of the EUT power.

Applicant : *Compex Systems Pte Ltd.*
Model No : *IWAVEPORT WLM54AG*
EUT : *Wireless-AG Network Mini PCI Adapter*
Test Mode : *802.11g (CH01)*
Test Date : *09/22/2005*

Power Line Conducted Emissions (Class B)					
Conductor	Frequency (MHz)	Quasi-Peak (dBuV)	Limits	Average (dBuV)	Limits
L1	0.20	53.71	63.27	43.69	53.27
	0.31	46.67	59.75	--	49.75
	0.52	42.60	56	--	46
	1.40	49.51	56	40.77	46
	3.07	46.04	56	38.36	46
	4.75	51.07	56	42.06	46
	8.28	49.87	60	40.35	50
L2	0.20	57.16	63.27	45.41	53.27
	0.31	51.06	59.75	42.74	49.75
	0.63	42.56	56	--	46
	1.40	48.61	56	39.65	46
	3.06	45.05	56	37.48	46
	4.95	51.48	56	42.01	46
	8.28	49.23	60	42.05	50

Notes :
1. L1: One end & Ground L2: The other end & Ground
2. Height of table on which the EUT was placed : 0.8 m.
3. The Quasi-Peak Value have already met the Average Value Limit showed on above limits.
4. The above test results are obtained under the normal condition.

2.6.5 Conducted Emissions (Subpart B & C)

The following table show a summary of the highest emissions of power line conducted emissions to the HOT and NATURAL conductor of the EUT power.

Applicant : *Compex Systems Pte Ltd.*
Model No : *IWAVEPORT WLM54AG*
EUT : *Wireless-AG Network Mini PCI Adapter*
Test Mode : *802.11g (CH06)*
Test Date : *09/22/2005*

Power Line Conducted Emissions (Class B)					
Conductor	Frequency (MHz)	Quasi-Peak (dBuV)	Limits	Average (dBuV)	Limits
L1	0.20	53.21	63.27	43.66	53.27
	0.52	43.10	56	--	46
	1.40	49.04	56	40.87	46
	3.14	46.44	56	39.97	46
	4.82	52.26	56	41.41	46
	8.28	49.76	60	40.23	50
	21.04	50.68	60	40.11	50
L2	0.21	57.30	63.18	46.84	53.18
	0.31	51.28	59.75	41.27	49.75
	1.41	48.28	56	39.98	46
	3.16	44.65	56	--	46
	4.75	49.42	56	41.18	46
	8.92	51.40	60	42.19	50
	21.04	49.02	60	40.06	50

Notes :
1. L1: One end & Ground L2: The other end & Ground
2. Height of table on which the EUT was placed : 0.8 m.
3. The Quasi-Peak Value have already met the Average Value Limit showed on above limits.
4. The above test results are obtained under the normal condition.

2.6.6 Conducted Emissions (Subpart B & C)

The following table show a summary of the highest emissions of power line conducted emissions to the HOT and NATURAL conductor of the EUT power.

Applicant : *Compex Systems Pte Ltd.*
Model No : *IWAVEPORT WLM54AG*
EUT : *Wireless-AG Network Mini PCI Adapter*
Test Mode : *802.11g (CH11)*
Test Date : *09/22/2005*

Power Line Conducted Emissions (Class B)					
Conductor	Frequency (MHz)	Quasi-Peak (dBuV)	Limits	Average (dBuV)	Limits
L1	0.21	53.05	63.18	40.73	53.18
	0.63	42.89	56	--	46
	1.41	49.54	56	38.83	46
	3.16	45.47	56	37.74	46
	4.70	50.90	56	41.77	46
	8.28	49.76	60	37.41	50
	21.04	47.18	60	--	50
L2	0.21	53.08	63.18	43.88	53.18
	0.31	46.64	59.93	--	49.93
	0.52	42.95	56	--	46
	1.40	49.53	56	39.94	46
	3.07	45.02	56	38.73	46
	4.77	50.84	56	41.72	46
	8.37	49.35	60	40.02	50

Notes :
1. L1: One end & Ground L2: The other end & Ground
2. Height of table on which the EUT was placed : 0.8 m.
3. The Quasi-Peak Value have already met the Average Value Limit showed on above limits.
4. The above test results are obtained under the normal condition.

III. Radiated Emissions Requirements

3.1 General Configuration:

Prior to open-field testing, the EUT was placed in a shielded enclosure and scanned at a close distance to determine its emission characteristics. The physical arrangement of the EUT was varied (within the scope of arrangements likely to be encountered in actual use) to determine the effect on the unit's emanations in amplitude, directivity, and frequency. The exact system configuration which produced the highest emissions was noted so it could be reproduced later during the open-field tests. This was done to ensure that the final measurements would demonstrate the worst-case interference potential of the EUT.

3.2 General Configuration:

Final radiation measurements were made on a three-meter, open-field test site. The EUT system was placed on a nonconductive turntable which is 0.8 meters height, top surface 1.0 x 1.5 meter. The spectrum was examined from 250 MHz to 2.5 GHz in order to cover the whole spectrum below 10th harmonic which could generate from the EUT. During the test, EUT was set to transmit continuously & Measurements spectrum range from 30 MHz to 40 GHz is investigated.

For measurements below 1 GHz the resolution bandwidth is set to 100 kHz for peak detection measurements or 120 kHz for quasi-peak detection measurements. Peak detection is used unless otherwise noted as quasi-peak.

For measurements above 1 GHz the resolution bandwidth is set to 1 MHz, then the video bandwidth is set to 1 MHz for peak measurements and 10 Hz for average measurements.

A nonconductive material surrounded the EUT to supporting the EUT for standing on tree orthogonal planes. At each condition, the EUT was rotated 360 degrees, and the antenna was raised and lowered from one to four meters to find the maximum emission levels. Measurements were taken using both horizontal and vertical antenna polarization.

The field strength below 1 GHz was measured by EMCO Biconilog Antenna (mode 3142) at 3 Meter and the SCHWARZBECK Double Ridged Guide Antenna (model BBHA9120D&9170) was used in frequencies 1 – 40 GHz at a distance of 1 meter. All test results were extrapolated to equivalent signal at 3 meters utilizing an inverse linear distance extrapolation Factor (20dB/decade).

For testing above 1GHz, the emission level of the EUT in peak mode was 20dB lower than average limit (that means the emission level in peak mode also complies with the limit in average mode), then testing will be stopped and peak values of EUT will be reported, otherwise, the emissions will be measured in average mode again and reported.

Appropriate preamplifiers were used for improving sensitivity and precautions were taken to avoid overloading or desensitizing the spectrum analyzer. No post – detector video filters were used in the test.

The spectrum analyzer's 6 dB bandwidth was set to 1 MHz, and the analyzer was operated in the peak detection mode, for frequencies both below and up 1 GHz. The average levels were obtained by subtracting the duty cycle correction factor from the peak readings.

The following procedures were used to convert the emission levels measured in decibels referenced to 1 microvlt (dBuV) into field intensity in microvolts pre meter(uV/m).

The actual field intensity in decibels referenced to 1 microvolt in to field intensity in microcolts per meter (dBuV/m).

The actual field is intensity in referenced to 1 microvolt per meter (dBuV/m) is determined by algebraically adding the measured reading in dBuV, the antenna factor (dB), and cable loss (dB) and Subtracting the gain of preamplifier (dB) is auto calculate in spectrum analyzer.

(1) Amplitude (dBuV/m)= FI(dBuV)+AF(dBuV)+CL(dBuV)-Gain(dB)

FI= Reading of the field intensity.
AF= Antenna factor.
CL= Cable loss.

P.S Amplitude is auto calculate in spectrum analyzer.

(2) Actual Amplitude (dBuV/m)= Amplitude (dBuV)-Dis(dB)

The FCC specified emission limits were calculated according the EUT operating frequency and by following linear interpolation equations:

(1) For fundamental frequency :
Transmitter Output < +30dBm

(2) For spurious frequency :
Spurious emission limits = fundamental emission limit /10

3.2 Test Equipment List:

A. HP 8591EM 9KHz-1.8GHz Spectrum Analyzer (S/N:73412A00230)
B. HP 8447D Pre Amplifier (S/N:2944A08954)
C. EMCO 3142 26MHz~2000MHz Biconilog Antenna (S/N:1184)
D. R&S ESVP 20MHz~1300MHz Test Receiver (S/N:881121/01)
E. Agilent E4407B 9KHz-26.5GHz Spectrum Analyzer (S/N:A872JS02291)
F. HP 8449B 1GHZ~26.5GHZ PRE Amplifier (S/N:1982901A91)
G. SCHWARZBECK BBHA 9120D 1GHz~18GHz Horn Antenna (S/N:141S3)
H. SCHWARZBECK BBHA 9170 15GHz~40GHz Horn Antenna (S/N:192S5)
I. Agilent E4446A 3Hz-44GHz Spectrum Analyzer (S/N:US44300422)
J. Herotek A402-417 26GHZ~40GHZ PRE Amplifier (S/N:306090)

3.3 Test Configuration:

Front View of The Test Configuration

Rear View of The Test Configuration

3.4 Test condition:

EUT tested in accordance with the specifications given by the manufacturer , and exercised in the most unfavorable manner.

3.5 Radiated Emissions Limits:

Frequency range (MHz)	Peak(dBuV)
30 to 88	40
88 to 216	43.5
216 to 960	46
Above 960	54

3.6 Measurement Data Of Radiated Emissions:

3.6.1 Open Field Radiated Emissions (Subpart B & C)

The highest peak values of radiated emissions from the EUT at various antenna heights, antenna polarization, EUT orientation , etc. are recorded on the following

Applicant : *Compex Systems Pte Ltd.*
Model No : *IWAVEPORT WLM54AG*
EUT : *Wireless-AG Network Mini PCI Adapter*
Test Mode : *802.11b (CH06)*
Test Date : *09/21/2005*

Radiated Emissions (HORIZONTAL)					
Frequency (MHz)	Amplitude (dBuV/m)	Ant. (m)	Table (Degree)	Limits(Class B) (dBuV/m)	Margin (dB)
99.88	33.72	2	270	43.5	-9.78
109.30	33.85	2.1	300	43.5	-9.65
166.54	36.98	1.5	240	43.5	-6.52
199.82	35.04	1.2	100	43.5	-8.46
213.87	34.77	2	290	43.5	-8.73
233.19	40.83	1.2	350	46	-5.17
499.30	40.84	1	240	46	-5.16
643.00	39.47	1	250	46	-6.53
699.61	41.60	1.3	200	46	-4.40
720.01	39.89	1	160	46	-6.11
815.11	39.92	1	240	46	-6.08

*Notes : 1.*Margin= Amplitude - Limits
*2.*Distance of Measurement : 3 Meter (30-1000MHz)
*3.*Height of table for EUT placed: 0.8 Meter.
*4.*ANT= Antenna height.
*5.*Amplitude= Reading Amplitude –Amplifier gain+ Cable loss +Antenna factor
(Auto calculate in spectrum analyzer)

3.6.2 Open Field Radiated Emissions (Subpart B & C)

The highest peak values of radiated emissions from the EUT at various antenna heights, antenna polarization, EUT orientation , etc. are recorded on the following.

Applicant : *Compex Systems Pte Ltd.*
Model No : *IWAVEPORT WLM54AG*
EUT : *Wireless-AG Network Mini PCI Adapter*
Test Mode : *802.11b (CH06)*
Test Date : *09/21/2005*

Radiated Emissions (VERTICAL)					
Frequency (MHz)	Amplitude (dBuV/m)	Ant. (m)	Table (Degree)	Limits(Class B) (dBuV/m)	Margin (dB)
99.88	36.11	1	300	43.5	-7.39
109.81	35.76	1	280	43.5	-7.74
165.95	37.97	1.2	340	43.5	-5.53
199.84	36.91	1	290	43.5	-6.59
233.19	39.32	1	270	46	-6.68
493.25	39.06	1.5	300	46	-6.94
625.73	41.79	1.8	220	46	-4.21
645.27	40.53	1	280	46	-5.47
701.75	39.80	2	160	46	-6.20
755.78	38.30	2.2	120	46	-7.70
779.95	38.09	1.8	300	46	-7.91

*Notes : 1.*Margin= Amplitude - Limits
*2.*Distance of Measurement : 3 Meter (30-1000MHz)
*3.*Height of table for EUT placed: 0.8 Meter.
*4.*ANT= Antenna height.
*5.*Amplitude= Reading Amplitude –Amplifier gain+ Cable loss +Antenna factor
(Auto calculate in spectrum analyzer)

3.6.3 Open Field Radiated Emissions (Subpart B & C)

The highest peak values of radiated emissions from the EUT at various antenna heights, antenna polarization, EUT orientation , etc. are recorded on the following

Applicant : *Compex Systems Pte Ltd.*
Model No : *IWAVEPORT WLM54AG*
EUT : *Wireless-AG Network Mini PCI Adapter*
Test Mode : *802.11g (CH01)*
Test Date : *09/21/2005*

Radiated Emissions (HORIZONTAL)					
Frequency (MHz)	Amplitude (dBuV/m)	Ant. (m)	Table (Degree)	Limits(Class B) (dBuV/m)	Margin (dB)
99.84	30.98	2.2	300	43.5	-12.52
108.97	32.87	1.8	120	43.5	-10.63
166.47	35.08	2	180	43.5	-8.42
199.80	34.74	2	240	43.5	-8.76
213.79	35.06	1.6	260	43.5	-8.44
233.20	38.83	1.2	300	46	-7.17
349.58	37.74	1	270	46	-8.26
643.02	38.87	1	250	46	-7.13
699.60	40.24	1	260	46	-5.76
720.05	39.79	1.3	320	46	-6.21
814.99	40.73	1	280	46	-5.27

*Notes : 1.*Margin= Amplitude - Limits
*2.*Distance of Measurement : 3 Meter (30-1000MHz)
*3.*Height of table for EUT placed: 0.8 Meter.
*4.*ANT= Antenna height.
*5.*Amplitude= Reading Amplitude –Amplifier gain+ Cable loss +Antenna factor
(Auto calculate in spectrum analyzer)

3.6.4 Open Field Radiated Emissions (Subpart B & C)

The highest peak values of radiated emissions from the EUT at various antenna heights, antenna polarization, EUT orientation , etc. are recorded on the following.

Applicant : *Compex Systems Pte Ltd.*
Model No : *IWAVEPORT WLM54AG*
EUT : *Wireless-AG Network Mini PCI Adapter*
Test Mode : *802.11g (CH01)*
Test Date : *09/21/2005*

Radiated Emissions (VERTICAL)					
Frequency (MHz)	Amplitude (dBuV/m)	Ant. (m)	Table (Degree)	Limits(Class B) (dBuV/m)	Margin (dB)
85.51	32.06	1.2	300	40	-7.94
99.85	34.11	1	320	43.5	-9.39
109.83	35.77	1	270	43.5	-7.73
165.90	36.95	1.3	100	43.5	-6.55
233.21	38.93	1.5	250	46	-7.07
493.25	39.06	1	140	46	-6.94
625.71	40.02	1	210	46	-5.98
645.22	39.98	2	260	46	-6.02
701.73	40.15	1.8	200	46	-5.85
755.76	39.42	1.5	150	46	-6.58
779.91	38.76	1.4	130	46	-7.24

*Notes : 1.*Margin= Amplitude - Limits
*2.*Distance of Measurement : 3 Meter (30-1000MHz)
*3.*Height of table for EUT placed: 0.8 Meter.
*4.*ANT= Antenna height.
*5.*Amplitude= Reading Amplitude –Amplifier gain+ Cable loss +Antenna factor
(Auto calculate in spectrum analyzer)

3.6.5 Open Field Radiated Emissions (Subpart C)

The highest peak values of radiated emissions from the EUT at various antenna heights, antenna polarization, EUT orientation , etc. are recorded on the following

Applicant : *Compex Systems Pte Ltd.*
Model No : *IWAVEPORT WLM54AG*
EUT : *Wireless-AG Network Mini PCI Adapter*
Test Mode : *802.11b(CH01)*
Test Date : *09/20/2005*

Radiated Emissions (HORIZONTAL)								
Frequency (MHz)	Amplitude (dBuV/m)	Ant. (m)	Table (Degree)	Duty (dB)	Dist (dB)	Actual Amp (dBuV/m)	Limit (dBuV/m)	Margin (dB)
1347.5	48.99 PK	1.2	200	0	9.54	39.45	74.00	-34.55
1877.5	46.45 PK	1	300	0	9.54	36.91	74.00	-37.09
4825.0	40.21 PK	1	280	0	9.54	30.67	74.00	-43.33
7235.5	41.25 PK	1	140	0	9.54	31.71	74.00	-42.29
9649.0	40.55 PK	1	250	0	9.54	31.01	74.00	-42.99
12057.5	41.64 PK	1.1	170	0	9.54	32.10	74.00	-41.90
14473.5	46.28 PK	1	90	0	9.54	36.74	74.00	-37.26

*Notes : 1.*Margin= Amplitude - Limits
*2.*Distance of Measurement : 1 Meter (1G-26.5GHz)
*3.*Height of table for EUT placed: 0.8 Meter.
*4.*ANT= Antenna height.
*5.*Duty= Duty cycle correction factor.
*6.*Dis= Distance extrapolation factor.
*7.*Amplitude= Reading Amplitude – Amplifier gain+ Cable loss +Antenna factor
(Auto calculate in spectrum analyzer)
*8.*Actual Amp= Amplitude – Duty – Dis.
*9.*The other emission levels were very low against the limit.

3.6.6 Open Field Radiated Emissions (Subpart C)

The highest peak values of radiated emissions from the EUT at various antenna heights, antenna polarization, EUT orientation , etc. are recorded on the following.

Applicant : *Compex Systems Pte Ltd.*
Model No : *IWAVEPORT WLM54AG*
EUT : *Wireless-AG Network Mini PCI Adapter*
Test Mode : *802.11b(CH01)*
Test Date : *09/20/2005*

Radiated Emissions (VERTICAL)								
Frequency (MHz)	Amplitude (dBuV/m)	Ant. (m)	Table (Degree)	Duty (dB)	Dist (dB)	Actual Amp (dBuV/m)	Limit (dBuV/m)	Margin (dB)
1347.5	49.65 PK	1	250	0	9.54	40.11	74.00	-33.89
1877.5	47.84 PK	1	180	0	9.54	38.30	74.00	-35.70
3765.8	42.53 PK	1	290	0	9.54	32.99	74.00	-41.01
7235.0	44.73 PK	1	230	0	9.54	35.19	74.00	-38.81
9650.0	43.02 PK	1.1	250	0	9.54	33.48	74.00	-40.52
12057.5	42.88 PK	1	170	0	9.54	33.34	74.00	-40.66
14473.0	45.26 PK	1	120	0	9.54	35.72	74.00	-38.28

*Notes : 1.*Margin= Amplitude - Limits
*2.*Distance of Measurement : 1 Meter (1G-26.5GHz)
*3.*Height of table for EUT placed: 0.8 Meter.
*4.*ANT= Antenna height.
*5.*Duty= Duty cycle correction factor.
*6.*Dis= Distance extrapolation factor.
*7.*Amplitude= Reading Amplitude – Amplifier gain+ Cable loss +Antenna factor
(Auto calculate in spectrum analyzer)
*8.*Actual Amp= Amplitude – Duty – Dis.
*9.*The other emission levels were very low against the limit.

3.6.7 Open Field Radiated Emissions (Subpart C)

The highest peak values of radiated emissions from the EUT at various antenna heights, antenna polarization, EUT orientation , etc. are recorded on the following

Applicant : *Compex Systems Pte Ltd.*
Model No : *IWAVEPORT WLM54AG*
EUT : *Wireless-AG Network Mini PCI Adapter*
Test Mode : *802.11b (CH06)*
Test Date : *09/20/2005*

Radiated Emissions (HORIZONTAL)								
Frequency (MHz)	Amplitude (dBuV/m)	Ant. (m)	Table (Degree)	Duty (dB)	Dist (dB)	Actual Amp (dBuV/m)	Limit (dBuV/m)	Margin (dB)
1345.0	46.83 PK	1	270	0	9.54	37.29	74.00	-36.71
1870.5	47.98 PK	1	240	0	9.54	38.44	74.00	-35.56
4873.5	39.66 PK	1.1	300	0	9.54	30.12	74.00	-43.88
7312.5	44.25 PK	1	340	0	9.54	34.71	74.00	-39.29
9747.5	42.79 PK	1	290	0	9.54	33.25	74.00	-40.75
12185.5	43.56 PK	1	260	0	9.54	34.02	74.00	-39.98
14623.0	44.73 PK	1	100	0	9.54	35.19	74.00	-38.81

*Notes : 1.*Margin= Amplitude - Limits
*2.*Distance of Measurement : 1 Meter (1G-26.5GHz)
*3.*Height of table for EUT placed: 0.8 Meter.
*4.*ANT= Antenna height.
*5.*Duty= Duty cycle correction factor.
*6.*Dis= Distance extrapolation factor.
*7.*Amplitude= Reading Amplitude – Amplifier gain+ Cable loss +Antenna factor
(Auto calculate in spectrum analyzer)
*8.*Actual Amp= Amplitude – Duty – Dis.
*9.*The other emission levels were very low against the limit.

3.6.8 Open Field Radiated Emissions (Subpart C)

The highest peak values of radiated emissions from the EUT at various antenna heights, antenna polarization, EUT orientation , etc. are recorded on the following.

Applicant : *Compex Systems Pte Ltd.*
Model No : *IWAVEPORT WLM54AG*
EUT : *Wireless-AG Network Mini PCI Adapter*
Test Mode : *802.11b (CH06)*
Test Date : *09/20/2005*

Radiated Emissions (VERTICAL)								
Frequency (MHz)	Amplitude (dBuV/m)	Ant. (m)	Table (Degree)	Duty (dB)	Dist (dB)	Actual Amp (dBuV/m)	Limit (dBuV/m)	Margin (dB)
1345.0	48.96 PK	1.1	360	0	9.54	39.42	74.00	-34.58
1870.5	49.88 PK	1	170	0	9.54	40.34	74.00	-33.66
3795.5	39.22 PK	1	240	0	9.54	29.68	74.00	-44.32
7311.5	40.21 PK	1	260	0	9.54	30.67	74.00	-43.33
9747.0	43.62 PK	1	210	0	9.54	34.08	74.00	-39.92
12184.0	44.24 PK	1	200	0	9.54	34.70	74.00	-39.30
14622.5	43.73 PK	1	250	0	9.54	34.19	74.00	-39.81

*Notes : 1.*Margin= Amplitude - Limits
*2.*Distance of Measurement : 1 Meter (1G-26.5GHz)
*3.*Height of table for EUT placed: 0.8 Meter.
*4.*ANT= Antenna height.
*5.*Duty= Duty cycle correction factor.
*6.*Dis= Distance extrapolation factor.
*7.*Amplitude= Reading Amplitude – Amplifier gain+ Cable loss +Antenna factor
(Auto calculate in spectrum analyzer)
*8.*Actual Amp= Amplitude – Duty – Dis.
*9.*The other emission levels were very low against the limit.

3.6.9 Open Field Radiated Emissions (Subpart C)

The highest peak values of radiated emissions from the EUT at various antenna heights, antenna polarization, EUT orientation , etc. are recorded on the following

Applicant : *Compex Systems Pte Ltd.*
Model No : *IWAVEPORT WLM54AG*
EUT : *Wireless-AG Network Mini PCI Adapter*
Test Mode : *802.11b (CH11)*
Test Date : *09/20/2005*

Radiated Emissions (HORIZONTAL)								
Frequency (MHz)	Amplitude (dBuV/m)	Ant. (m)	Table (Degree)	Duty (dB)	Dist (dB)	Actual Amp (dBuV/m)	Limit (dBuV/m)	Margin (dB)
1355.5	48.92 PK	1	180	0	9.54	39.38	74.00	-34.62
1884.0	44.76 PK	1.2	250	0	9.54	35.22	74.00	-38.78
4926.0	40.22 PK	1	300	0	9.54	30.68	74.00	-43.32
7387.5	44.35 PK	1	320	0	9.54	34.81	74.00	-39.19
9847.5	44.69 PK	1	320	0	9.54	35.15	74.00	-38.85
12312.5	43.88 PK	1	270	0	9.54	34.34	74.00	-39.66
14771.0	45.02 PK	1	250	0	9.54	35.48	74.00	-38.52

*Notes : 1.*Margin= Amplitude - Limits
*2.*Distance of Measurement : 1 Meter (1G-26.5GHz)
*3.*Height of table for EUT placed: 0.8 Meter.
*4.*ANT= Antenna height.
*5.*Duty= Duty cycle correction factor.
*6.*Dis= Distance extrapolation factor.
*7.*Amplitude= Reading Amplitude – Amplifier gain+ Cable loss +Antenna factor
(Auto calculate in spectrum analyzer)
*8.*Actual Amp= Amplitude – Duty – Dis.
*9.*The other emission levels were very low against the limit.

3.6.10 Open Field Radiated Emissions (Subpart C)

The highest peak values of radiated emissions from the EUT at various antenna heights, antenna polarization, EUT orientation , etc. are recorded on the following.

Applicant : *Compex Systems Pte Ltd.*
Model No : *IWAVEPORT WLM54AG*
EUT : *Wireless-AG Network Mini PCI Adapter*
Test Mode : *802.11b (CH11)*
Test Date : *09/20/2005*

Radiated Emissions (VERTICAL)								
Frequency (MHz)	Amplitude (dBuV/m)	Ant. (m)	Table (Degree)	Duty (dB)	Dist (dB)	Actual Amp (dBuV/m)	Limit (dBuV/m)	Margin (dB)
1355.0	49.33 PK	1	280	0	9.54	39.79	74.00	-34.21
1884.5	46.37 PK	1	200	0	9.54	36.83	74.00	-37.17
4025.5	39.92 PK	1	250	0	9.54	30.38	74.00	-43.62
7386.0	41.20 PK	1	270	0	9.54	31.66	74.00	-42.34
9848.0	42.05 PK	1.2	160	0	9.54	32.51	74.00	-41.49
12312.5	41.97 PK	1	300	0	9.54	32.43	74.00	-41.57
14771.0	44.38 PK	1	320	0	9.54	34.84	74.00	-39.16

*Notes : 1.*Margin= Amplitude - Limits
*2.*Distance of Measurement : 1 Meter (1G-26.5GHz)
*3.*Height of table for EUT placed: 0.8 Meter.
*4.*ANT= Antenna height.
*5.*Duty= Duty cycle correction factor.
*6.*Dis= Distance extrapolation factor.
*7.*Amplitude= Reading Amplitude – Amplifier gain+ Cable loss +Antenna factor
(Auto calculate in spectrum analyzer)
*8.*Actual Amp= Amplitude – Duty – Dis.
*9.*The other emission levels were very low against the limit.

3.6.11 Open Field Radiated Emissions (Subpart C)

The highest peak values of radiated emissions from the EUT at various antenna heights, antenna polarization, EUT orientation , etc. are recorded on the following

Applicant : *Compex Systems Pte Ltd.*
Model No : *IWAVEPORT WLM54AG*
EUT : *Wireless-AG Network Mini PCI Adapter*
Test Mode : *802.11g (CH01)*
Test Date : *09/20/2005*

Radiated Emissions (HORIZONTAL)								
Frequency (MHz)	Amplitude (dBuV/m)	Ant. (m)	Table (Degree)	Duty (dB)	Dist (dB)	Actual Amp (dBuV/m)	Limit (dBuV/m)	Margin (dB)
1346.0	49.45 PK	1	300	0	9.54	39.91	74.00	-34.09
1878.0	46.72 PK	1	260	0	9.54	37.18	74.00	-36.82
4821.0	38.22 PK	1	280	0	9.54	28.68	74.00	-45.32
7235.5	40.17 PK	1.2	290	0	9.54	30.63	74.00	-43.37
9648.5	42.53 PK	1	320	0	9.54	32.99	74.00	-41.01
12056.5	43.01 PK	1	240	0	9.54	33.47	74.00	-40.53
14474.0	44.77 PK	1	180	0	9.54	35.23	74.00	-38.77

*Notes : 1.*Margin= Amplitude - Limits
*2.*Distance of Measurement : 1 Meter (1G-26.5GHz)
*3.*Height of table for EUT placed: 0.8 Meter.
*4.*ANT= Antenna height.
*5.*Duty= Duty cycle correction factor.
*6.*Dis= Distance extrapolation factor.
*7.*Amplitude= Reading Amplitude – Amplifier gain+ Cable loss +Antenna factor
(Auto calculate in spectrum analyzer)
*8.*Actual Amp= Amplitude – Duty – Dis.
*9.*The other emission levels were very low against the limit.

3.6.12 Open Field Radiated Emissions (Subpart C)

The highest peak values of radiated emissions from the EUT at various antenna heights, antenna polarization, EUT orientation , etc. are recorded on the following.

Applicant : *Compex Systems Pte Ltd.*
Model No : *IWAVEPORT WLM54AG*
EUT : *Wireless-AG Network Mini PCI Adapter*
Test Mode : *802.11g (CH01)*
Test Date : *09/20/2005*

Radiated Emissions (VERTICAL)								
Frequency (MHz)	Amplitude (dBuV/m)	Ant. (m)	Table (Degree)	Duty (dB)	Dist (dB)	Actual Amp (dBuV/m)	Limit (dBuV/m)	Margin (dB)
1346.0	48.36 PK	1	100	0	9.54	38.82	74.00	-35.18
1878.0	47.43 PK	1	240	0	9.54	37.89	74.00	-36.11
3764.0	40.11 PK	1.2	130	0	9.54	30.57	74.00	-43.43
7235.5	42.53 PK	1	80	0	9.54	32.99	74.00	-41.01
9648.0	44.63 PK	1	350	0	9.54	35.09	74.00	-38.91
12056.5	43.87 PK	1.2	220	0	9.54	34.33	74.00	-39.67
14474.0	45.72 PK	1	200	0	9.54	36.18	74.00	-37.82

*Notes : 1.*Margin= Amplitude - Limits
*2.*Distance of Measurement : 1 Meter (1G-26.5GHz)
*3.*Height of table for EUT placed: 0.8 Meter.
*4.*ANT= Antenna height.
*5.*Duty= Duty cycle correction factor.
*6.*Dis= Distance extrapolation factor.
*7.*Amplitude= Reading Amplitude – Amplifier gain+ Cable loss +Antenna factor
(Auto calculate in spectrum analyzer)
*8.*Actual Amp= Amplitude – Duty – Dis.
*9.*The other emission levels were very low against the limit.

3.6.13 Open Field Radiated Emissions (Subpart C)

The highest peak values of radiated emissions from the EUT at various antenna heights, antenna polarization, EUT orientation , etc. are recorded on the following

Applicant : *Compex Systems Pte Ltd.*
Model No : *IWAVEPORT WLM54AG*
EUT : *Wireless-AG Network Mini PCI Adapter*
Test Mode : *802.11g (CH06)*
Test Date : *09/20/2005*

Radiated Emissions (HORIZONTAL)								
Frequency (MHz)	Amplitude (dBuV/m)	Ant. (m)	Table (Degree)	Duty (dB)	Dist (dB)	Actual Amp (dBuV/m)	Limit (dBuV/m)	Margin (dB)
1346.0	47.33 PK	1	240	0	9.54	37.79	74.00	-36.21
1878.0	48.25 PK	1	210	0	9.54	38.71	74.00	-35.29
4875.0	37.69 PK	1	80	0	9.54	28.15	74.00	-45.85
7313.5	42.55 PK	1	270	0	9.54	33.01	74.00	-40.99
9749.0	43.63 PK	1	140	0	9.54	34.09	74.00	-39.91
12185.5	42.73 PK	1	200	0	9.54	33.19	74.00	-40.81
14622.5	44.99 PK	1	300	0	9.54	35.45	74.00	-38.55

*Notes : 1.*Margin= Amplitude - Limits
*2.*Distance of Measurement : 1 Meter (1G-26.5GHz)
*3.*Height of table for EUT placed: 0.8 Meter.
*4.*ANT= Antenna height.
*5.*Duty= Duty cycle correction factor.
*6.*Dis= Distance extrapolation factor.
*7.*Amplitude= Reading Amplitude – Amplifier gain+ Cable loss +Antenna factor
(Auto calculate in spectrum analyzer)
*8.*Actual Amp= Amplitude – Duty – Dis.
*9.*The other emission levels were very low against the limit.

3.6.14 Open Field Radiated Emissions (Subpart C)

The highest peak values of radiated emissions from the EUT at various antenna heights, antenna polarization, EUT orientation , etc. are recorded on the following.

Applicant : *Compex Systems Pte Ltd.*
Model No : *IWAVEPORT WLM54AG*
EUT : *Wireless-AG Network Mini PCI Adapter*
Test Mode : *802.11g (CH06)*
Test Date : *09/20/2005*

Radiated Emissions (VERTICAL)								
Frequency (MHz)	Amplitude (dBuV/m)	Ant. (m)	Table (Degree)	Duty (dB)	Dist (dB)	Actual Amp (dBuV/m)	Limit (dBuV/m)	Margin (dB)
1346.5	49.53 PK	1	220	0	9.54	39.99	74.00	-34.01
1878.0	47.44 PK	1	360	0	9.54	37.90	74.00	-36.10
3796.0	39.86 PK	1.2	280	0	9.54	30.32	74.00	-43.68
7313.5	40.15 PK	1	100	0	9.54	30.61	74.00	-43.39
9749.5	42.74 PK	1	110	0	9.54	33.20	74.00	-40.80
12186.0	43.63 PK	1	160	0	9.54	34.09	74.00	-39.91
14622.5	45.82 PK	1.1	300	0	9.54	36.28	74.00	-37.72

*Notes : 1.*Margin= Amplitude - Limits
*2.*Distance of Measurement : 1 Meter (1G-26.5GHz)
*3.*Height of table for EUT placed: 0.8 Meter.
*4.*ANT= Antenna height.
*5.*Duty= Duty cycle correction factor.
*6.*Dis= Distance extrapolation factor.
*7.*Amplitude= Reading Amplitude – Amplifier gain+ Cable loss +Antenna factor
(Auto calculate in spectrum analyzer)
*8.*Actual Amp= Amplitude – Duty – Dis.
*9.*The other emission levels were very low against the limit.

3.6.15 Open Field Radiated Emissions (Subpart C)

The highest peak values of radiated emissions from the EUT at various antenna heights, antenna polarization, EUT orientation , etc. are recorded on the following

Applicant : *Compex Systems Pte Ltd.*
Model No : *IWAVEPORT WLM54AG*
EUT : *Wireless-AG Network Mini PCI Adapter*
Test Mode : *802.11g (CH11)*
Test Date : *09/20/2005*

Radiated Emissions (HORIZONTAL)								
Frequency (MHz)	Amplitude (dBuV/m)	Ant. (m)	Table (Degree)	Duty (dB)	Dist (dB)	Actual Amp (dBuV/m)	Limit (dBuV/m)	Margin (dB)
1356.5	49.42 PK	1.2	340	0	9.54	39.88	74.00	-34.12
1882.5	48.54 PK	1	270	0	9.54	39.00	74.00	-35.00
4926.5	39.88 PK	1	200	0	9.54	30.34	74.00	-43.66
7387.5	40.75 PK	1	280	0	9.54	31.21	74.00	-42.79
9850.0	43.62 PK	1	300	0	9.54	34.08	74.00	-39.92
12312.5	44.77 PK	1	320	0	9.54	35.23	74.00	-38.77
14774.0	44.85 PK	1	260	0	9.54	35.31	74.00	-38.69

*Notes : 1.*Margin= Amplitude - Limits
*2.*Distance of Measurement : 1 Meter (1G-26.5GHz)
*3.*Height of table for EUT placed: 0.8 Meter.
*4.*ANT= Antenna height.
*5.*Duty= Duty cycle correction factor.
*6.*Dis= Distance extrapolation factor.
*7.*Amplitude= Reading Amplitude – Amplifier gain+ Cable loss +Antenna factor
(Auto calculate in spectrum analyzer)
*8.*Actual Amp= Amplitude – Duty – Dis.
*9.*The other emission levels were very low against the limit.

3.6.16 Open Field Radiated Emissions (Subpart C)

The highest peak values of radiated emissions from the EUT at various antenna heights, antenna polarization, EUT orientation , etc. are recorded on the following.

Applicant : *Compex Systems Pte Ltd.*
Model No : *IWAVEPORT WLM54AG*
EUT : *Wireless-AG Network Mini PCI Adapter*
Test Mode : *802.11g (CH11)*
Test Date : *09/20/2005*

Radiated Emissions (VERTICAL)								
Frequency (MHz)	Amplitude (dBuV/m)	Ant. (m)	Table (Degree)	Duty (dB)	Dist (dB)	Actual Amp (dBuV/m)	Limit (dBuV/m)	Margin (dB)
1356.0	48.02 PK	1	100	0	9.54	38.48	74.00	-35.52
1882.5	48.42 PK	1	70	0	9.54	38.88	74.00	-35.12
4024.0	39.97 PK	1	210	0	9.54	30.43	74.00	-43.57
7387.5	40.11 PK	1.2	80	0	9.54	30.57	74.00	-43.43
9850.5	42.12 PK	1	120	0	9.54	32.58	74.00	-41.42
12312.0	43.63 PK	1.1	200	0	9.54	34.09	74.00	-39.91
14774.0	44.78 PK	1	280	0	9.54	35.24	74.00	-38.76

*Notes : 1.*Margin= Amplitude - Limits
*2.*Distance of Measurement : 1 Meter (1G-26.5GHz)
*3.*Height of table for EUT placed: 0.8 Meter.
*4.*ANT= Antenna height.
*5.*Duty= Duty cycle correction factor.
*6.*Dis= Distance extrapolation factor.
*7.*Amplitude= Reading Amplitude – Amplifier gain+ Cable loss +Antenna factor
(Auto calculate in spectrum analyzer)
*8.*Actual Amp= Amplitude – Duty – Dis.
*9.*The other emission levels were very low against the limit.

IV. 802.11b/g 2400MHZ – 2483.5MHz

1. Maximum Conducted Output Power Requirements

1.1 Test Condition & Setup :

The tests below are run with the EUT's transmitter set at high power in TDD mode. A RJ-45 port from a computer to the EUT is needed to force selection of output power level and channel number. While testing, EUT was set to transmit continuously. Remove the Subjective device's antenna and connect the RF output port to spectrum analyzer. The maximum peak output power shall not exceed 1 watt.

Use a direct connection between the antenna port of transmitter and the spectrum Analyzer, for prevent the spectrum analyzer input attenuation 40-50 dB. Set the RBW Bandwidth of the emission or use a channel power meter mode .

For antennas with gains of 6 dBi or less , maximum allowed transmitter output is 1 watt (+30 dBm). For antennas with gains greater than 6 dBi, transmitter output level must be decreased by an amount equal to (GAIN - 6)/3 dBm.

The antenna port of the EUT was connected to the input of a power meter. Power was read directly and cable loss correction was added to the reading to obtain power at the EUT antenna terminals.

1.2 Test Instruments Configuration:

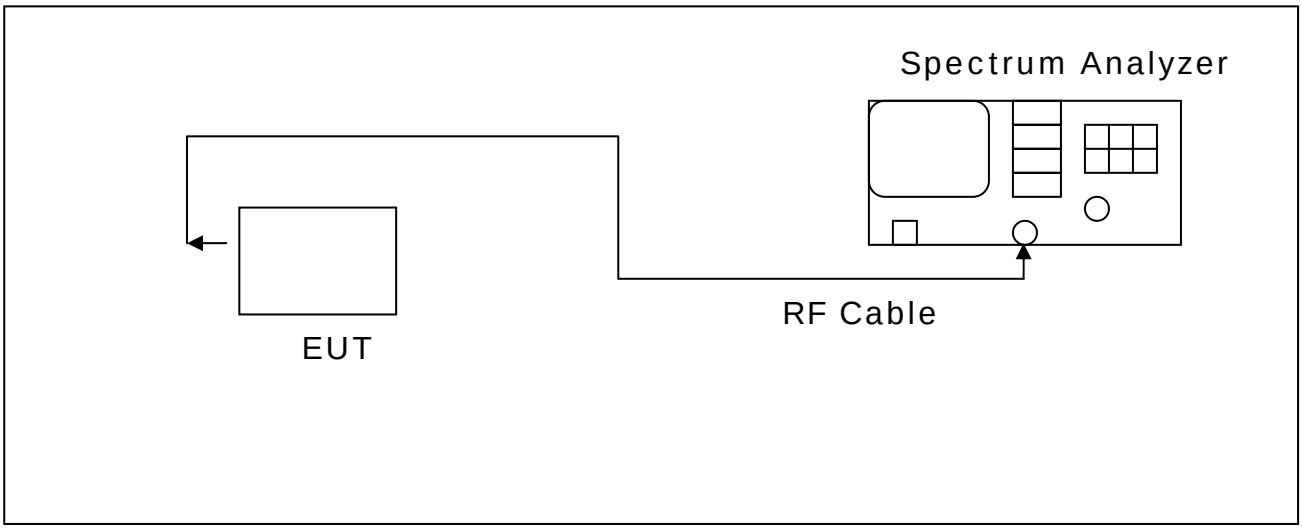

1.3 Test Equipment List:

A. Agilent E4407B 9KHz-26.5GHz Spectrum Analyzer (S/N:A872JS02291)
B. HP 8449B 1GHZ~26.5GHZ PRE Amplifier (S/N:1982901A91)
C. Shielded Room (MLT-SR1)

1.4 Test Result:

802.11b

Frequency (MHz)	Output (dBm)	Required Limit
2412	15.77	<30dBm
2437	15.54	<30dBm
2462	15.53	<30dBm

802.11g

Frequency (MHz)	Output (dBm)	Required Limit
2412	11.06	<30dBm
2437	11.16	<30dBm
2462	11.05	<30dBm

Note :Test Graphs See next page.

802.11b (2412MHz)

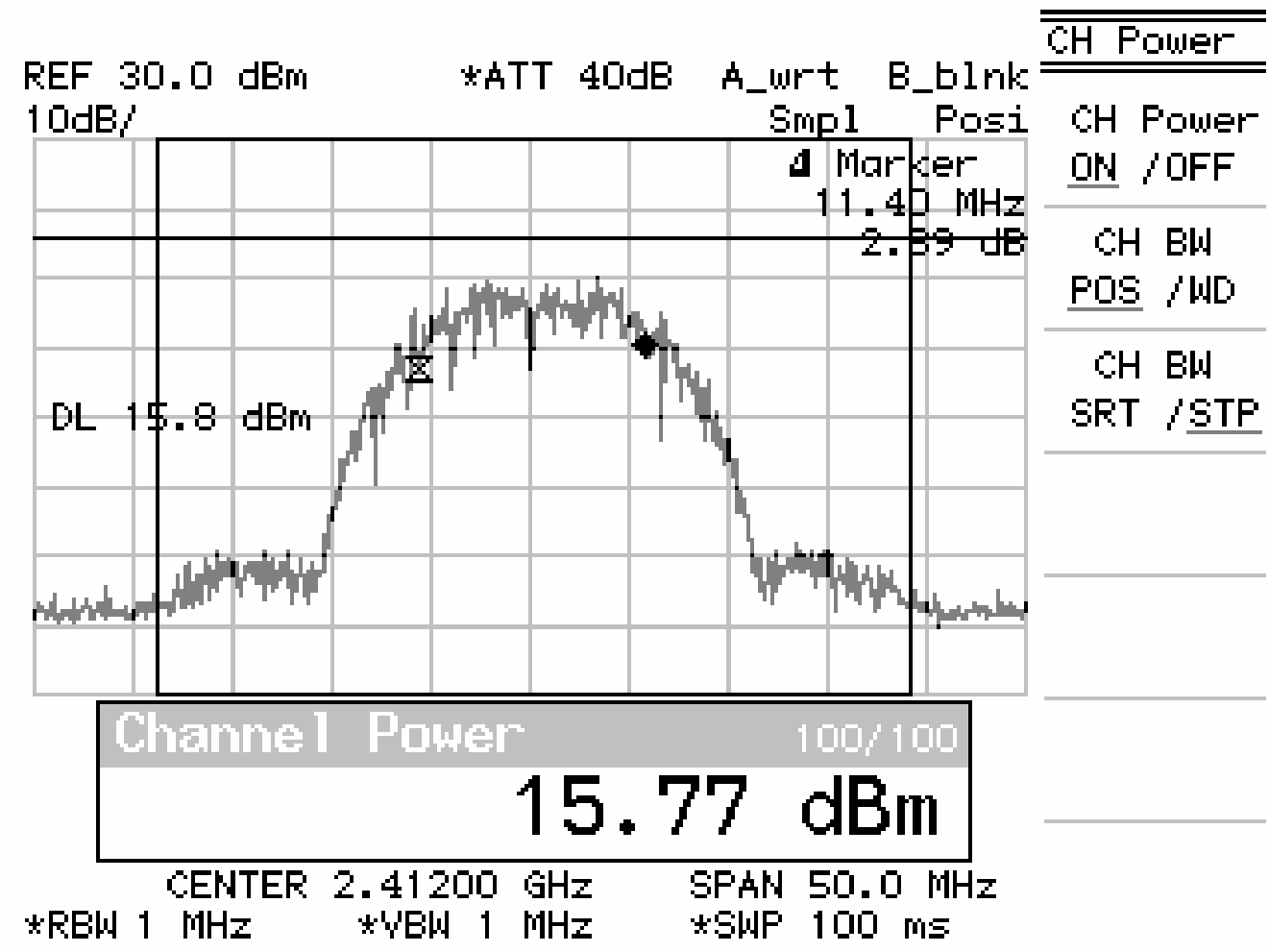

802.11b (2437MHz)

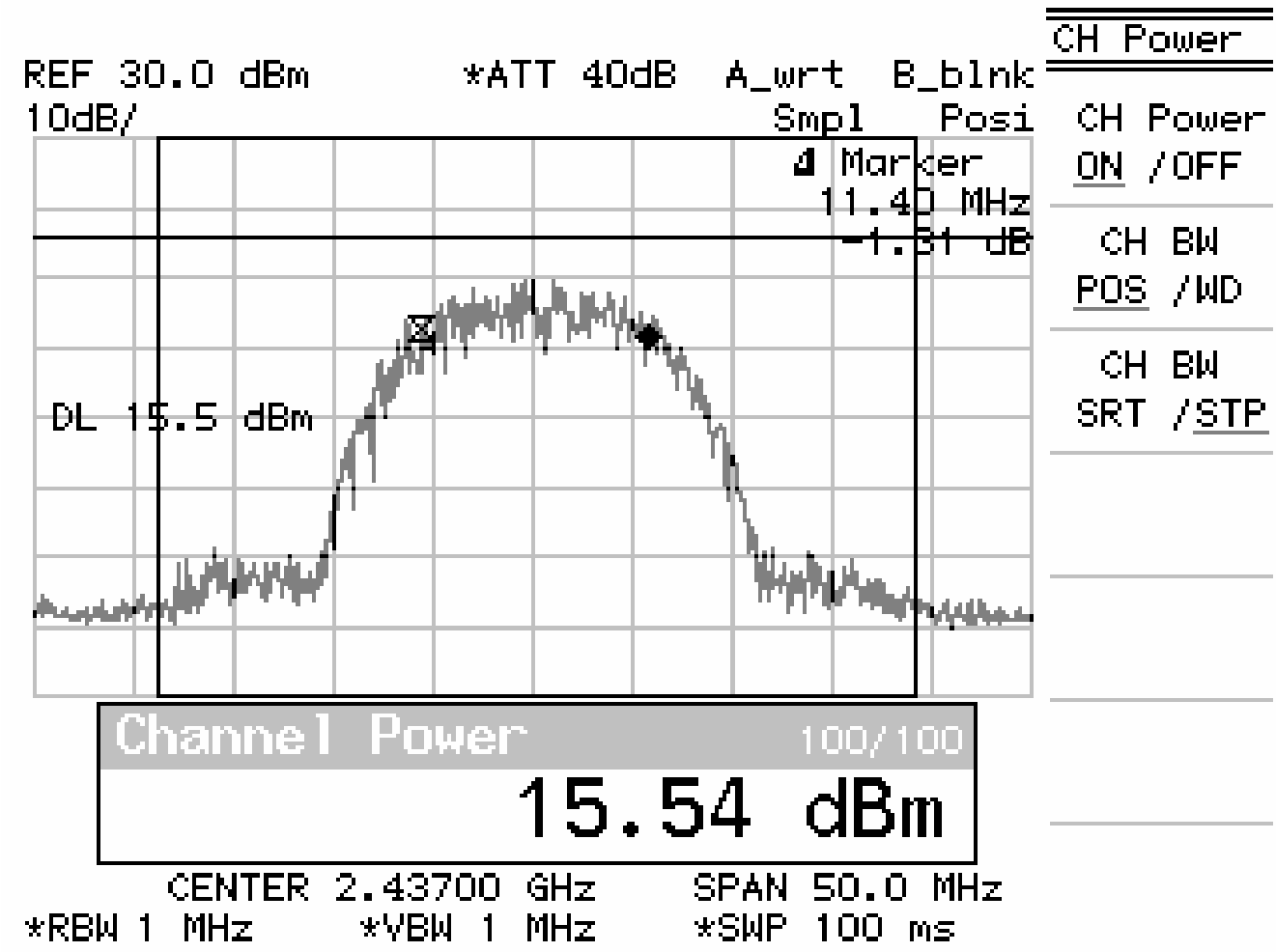

802.11b (2462MHz)

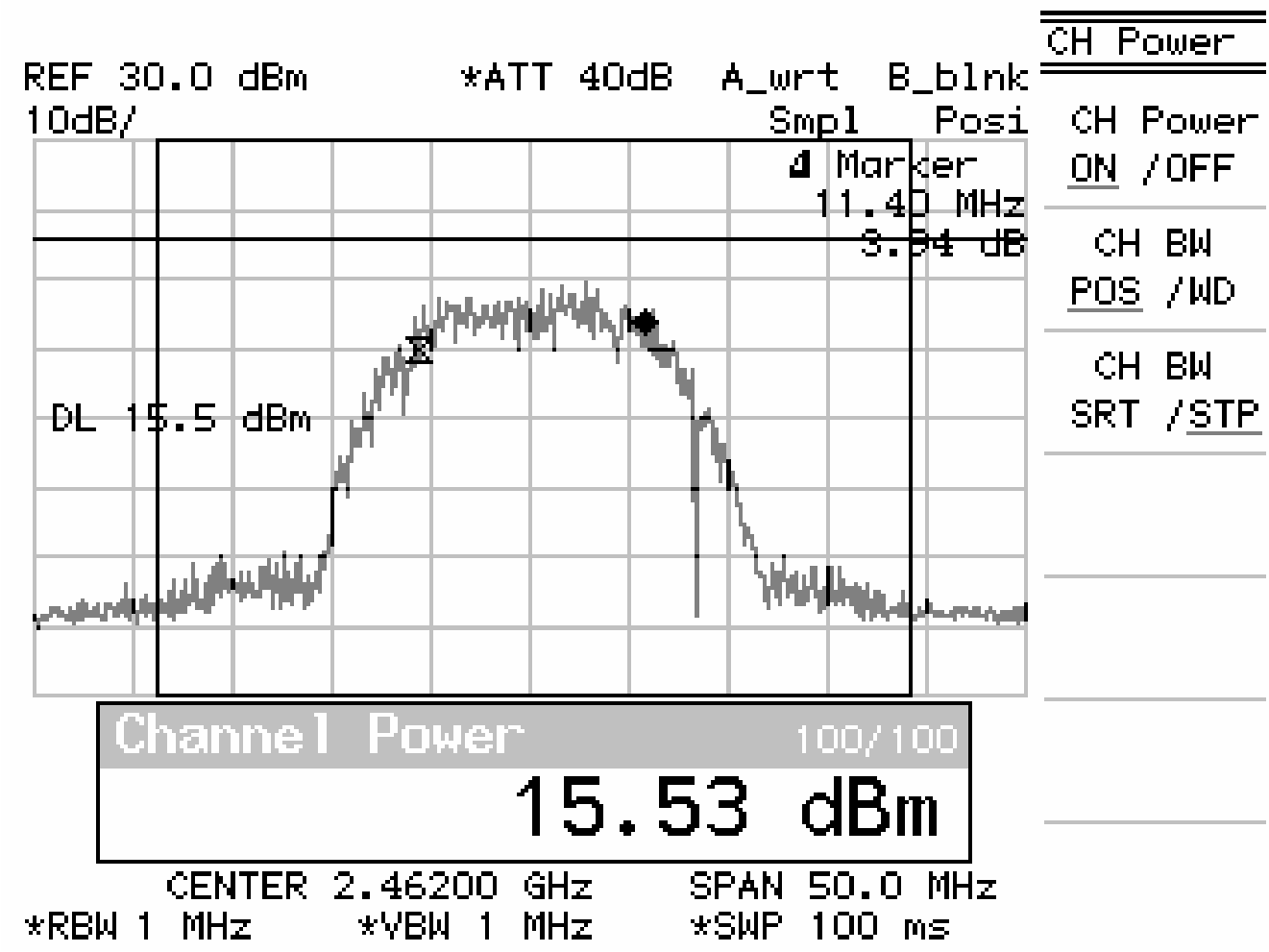

802.11g (2412MHz)

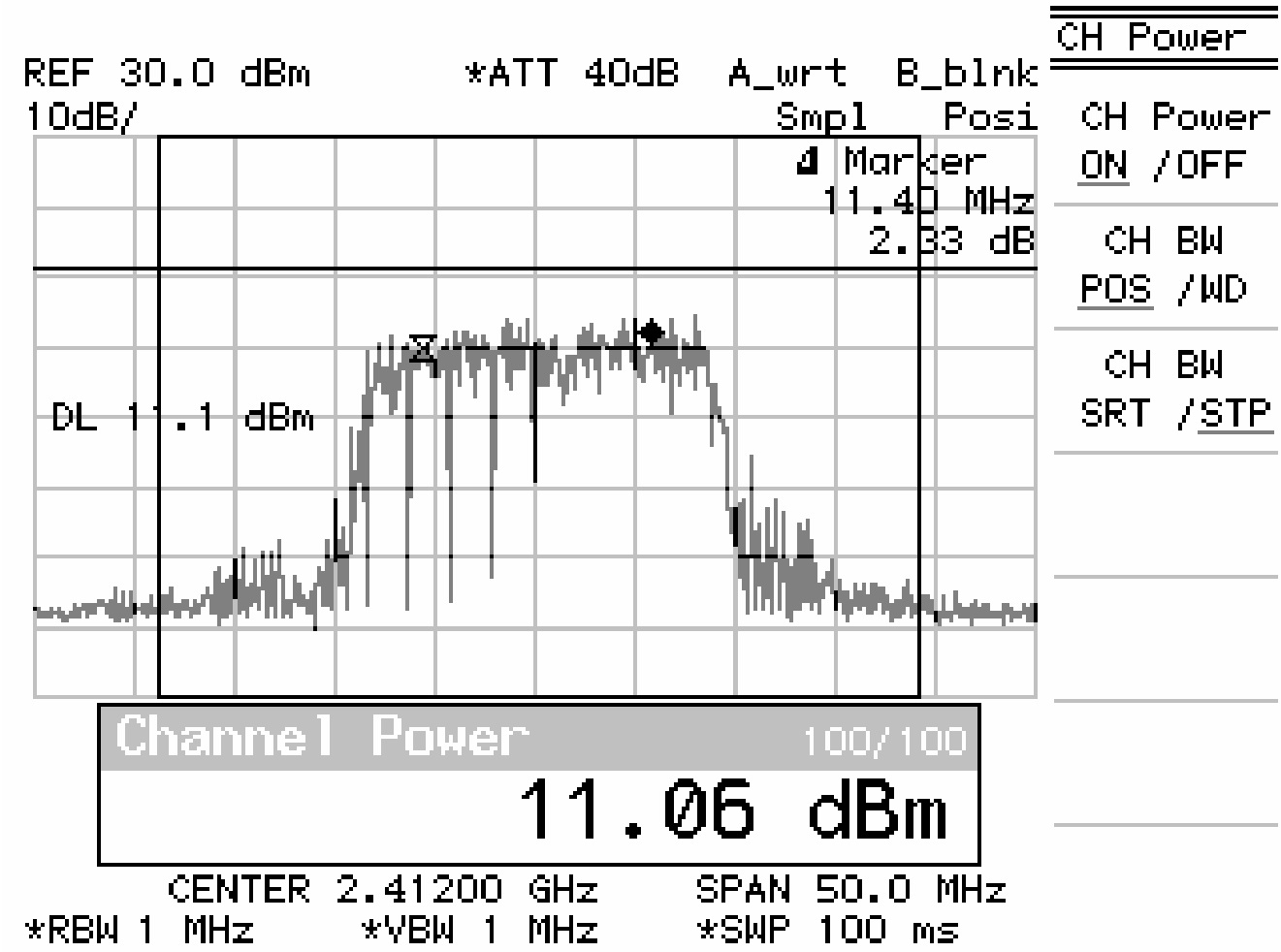

802.11g (2437MHz)

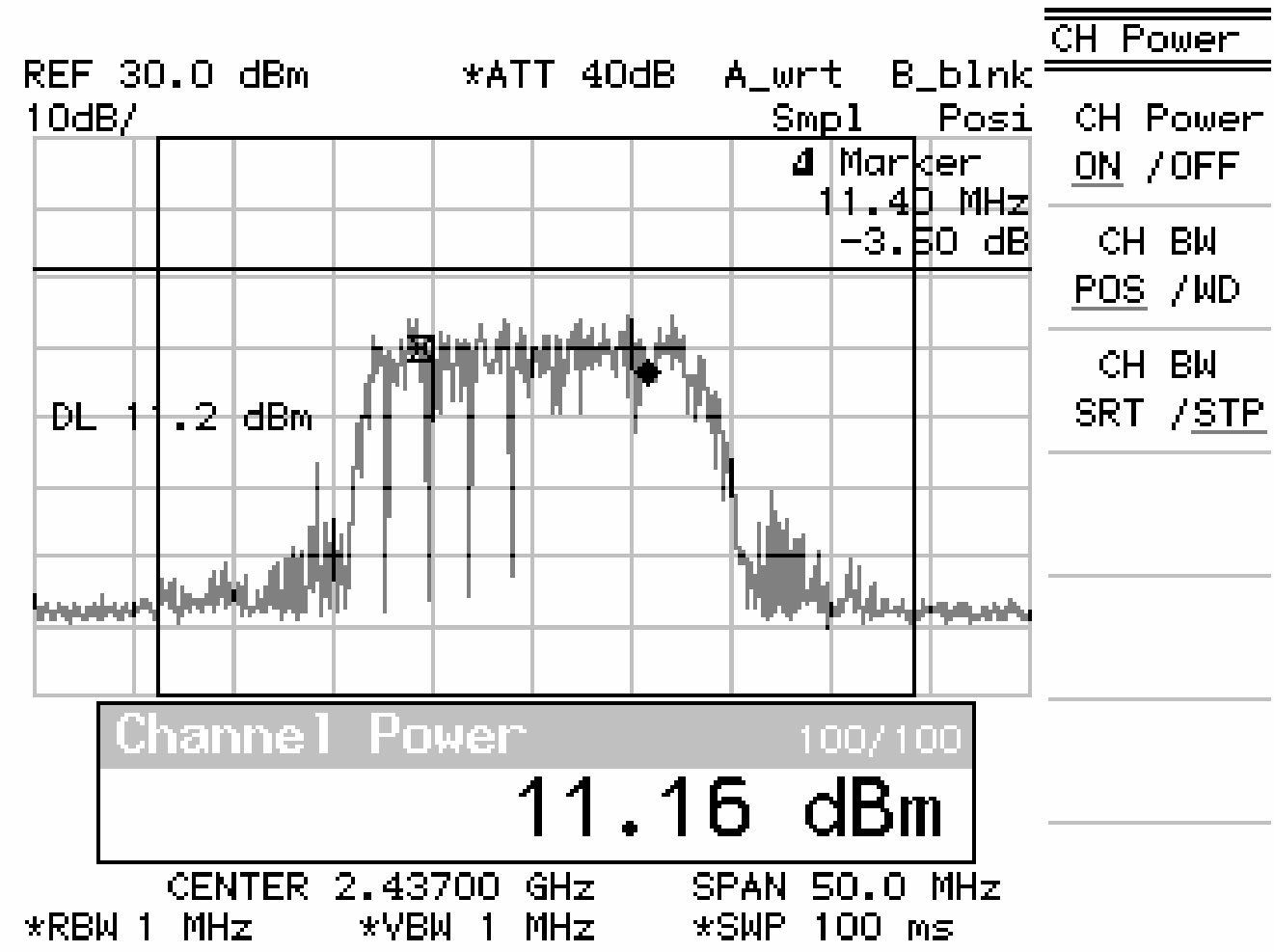

802.11g (2462MHz)

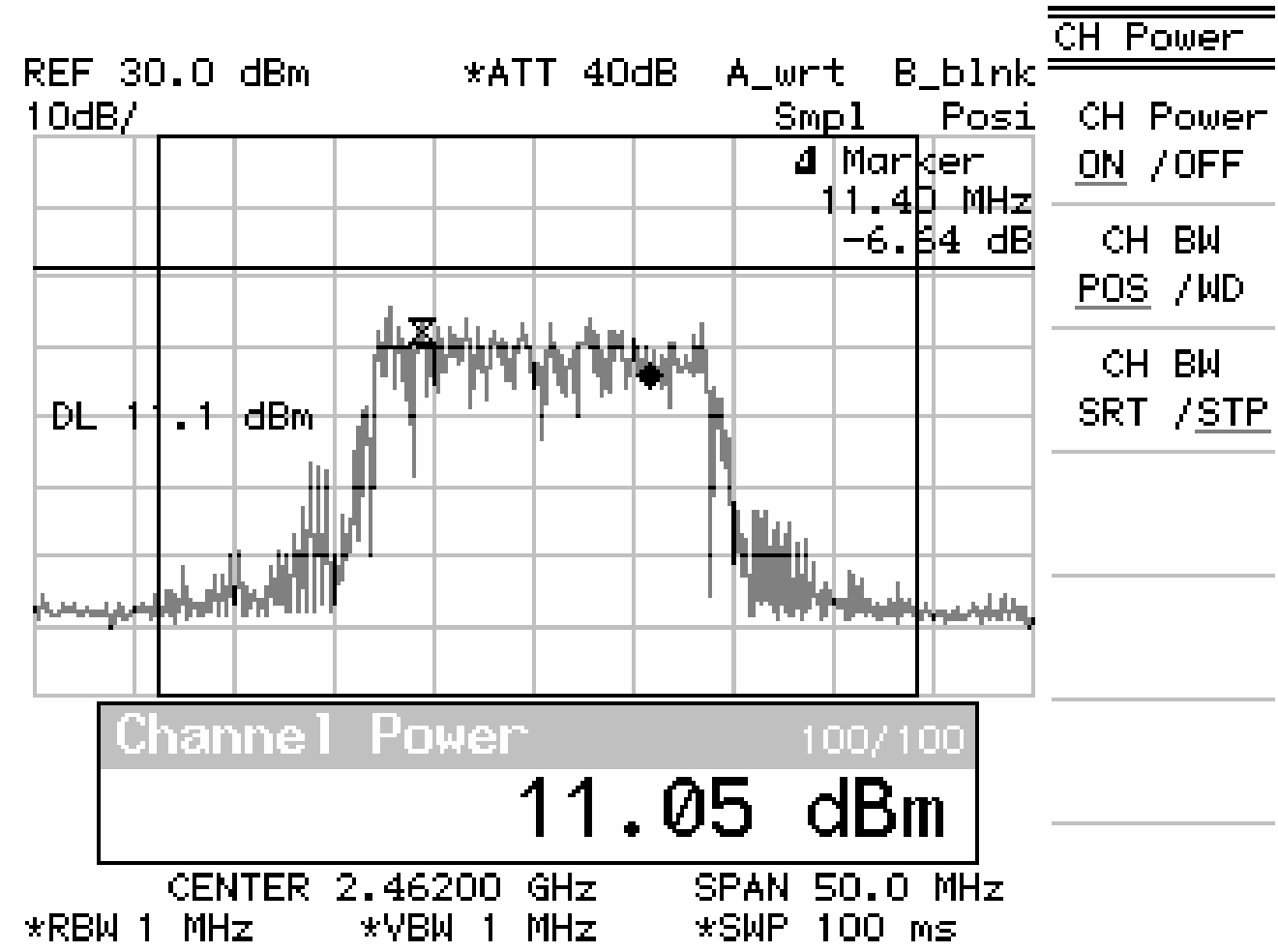

2. Minimum 6dB RF Bandwidth Requirements

2.1 Test Condition & Setup :

The antenna port of the EUT was connected to the input of a spectrum analyzer. Analyzer RES BW was set to 100 kHz. For each RF output channel investigated, the spectrum analyzer center frequency was set to the channel carrier. A PEAK output reading was taken, a DISPLAY line was drawn 6 dB lower than PEAK level. The 6 dB bandwidth was determined from where the channel output spectrum intersected the display line.
The test was performed at 3 channels (Channel 1, 6,11)

2.2 Test Instruments Configuration:

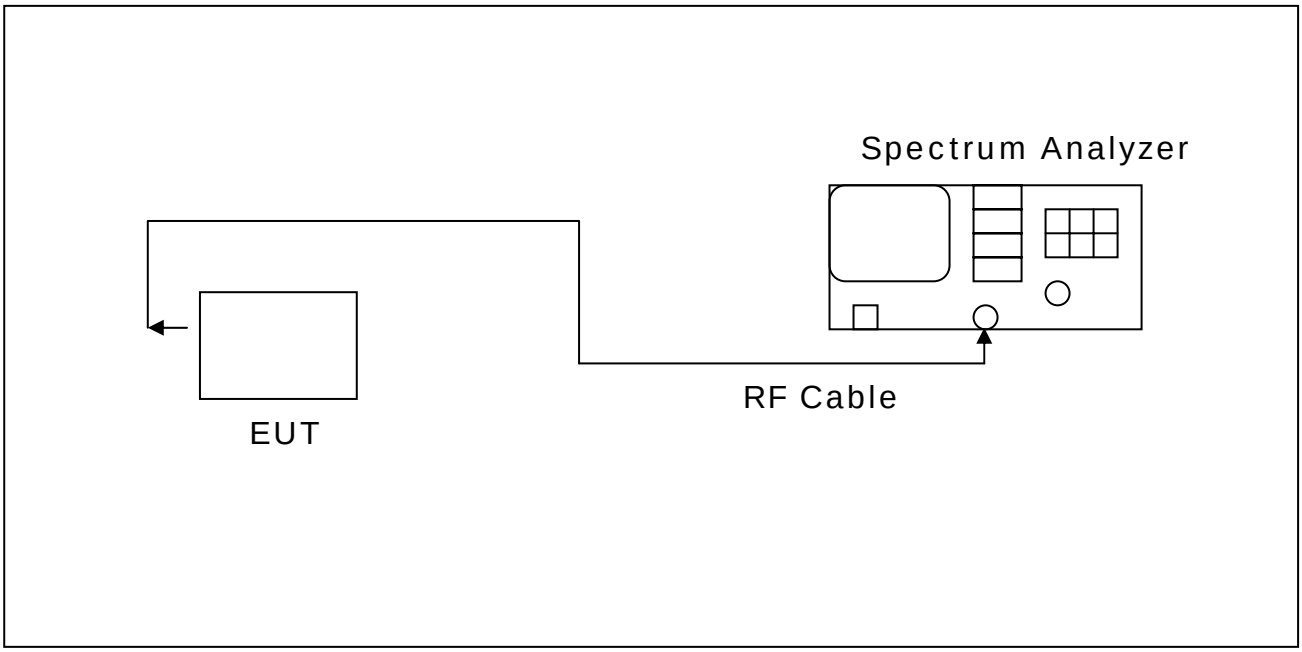

2.3 Test Equipment List:

A. Agilent E4407B 9KHz-26.5GHz Spectrum Analyzer (S/N:A872JS02291)
B. HP 8449B 1GHz-26.5GHz Pre Amplifier (S/N:1982901A91)
C. Shielded Room (MLT-SR1)

2.4 Test Result:

802.11b

Frequency (MHz)	Min. 6dB Bandwidth (MHz)	Required Limit
2412	11.4	>500KHz
2437	11.1	>500KHz
2462	11.4	>500KHz

802.11g

Frequency (MHz)	Min. 6dB Bandwidth (MHz)	Required Limit
2412	16.7	>500KHz
2437	16.8	>500KHz
2462	16.7	>500KHz

Note :Test Graphs See next page.

802.11b (2412MHz)

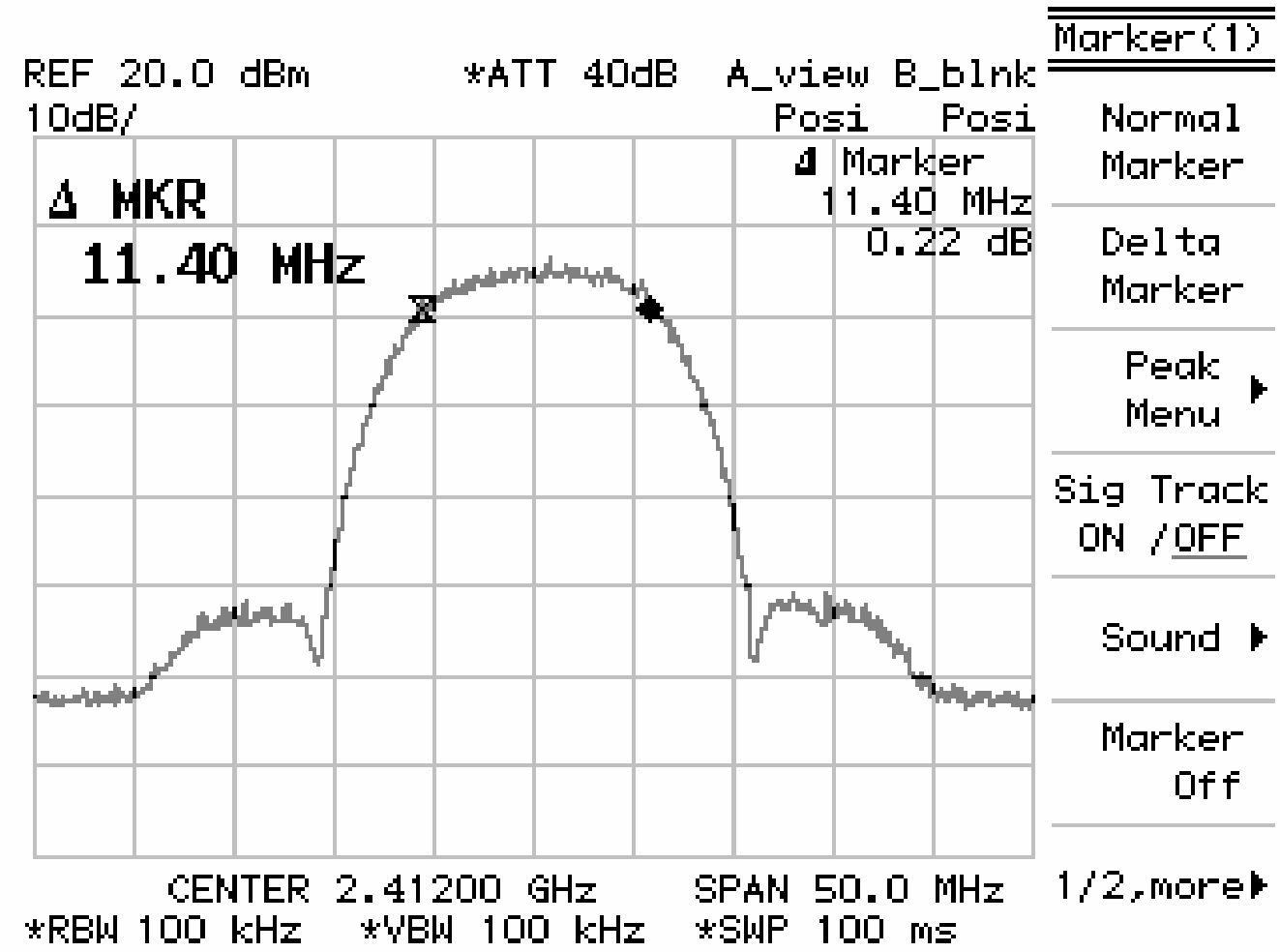

802.11b (2437MHz)

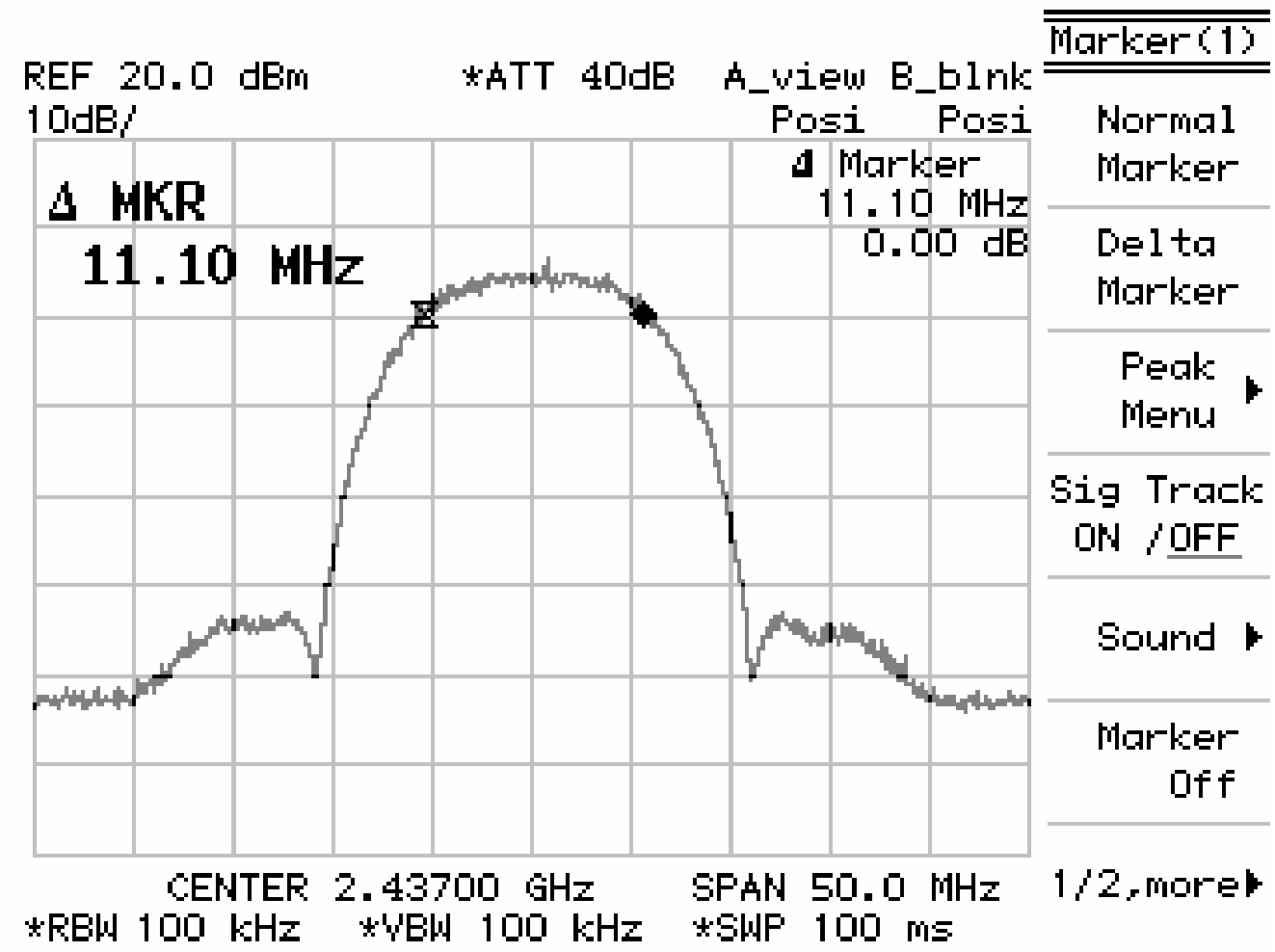

802.11b (2462MHz)

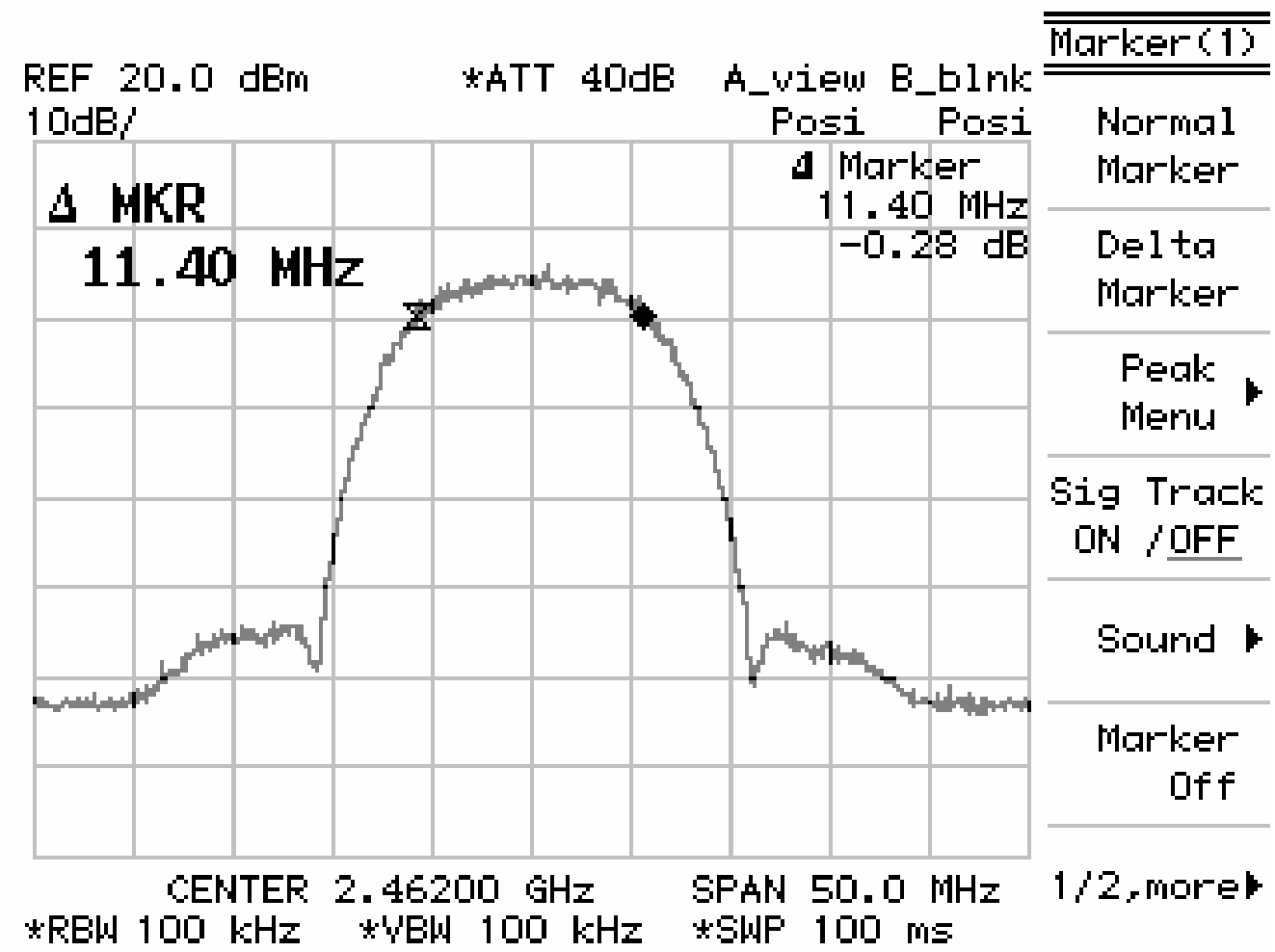

802.11g (2412MHz)

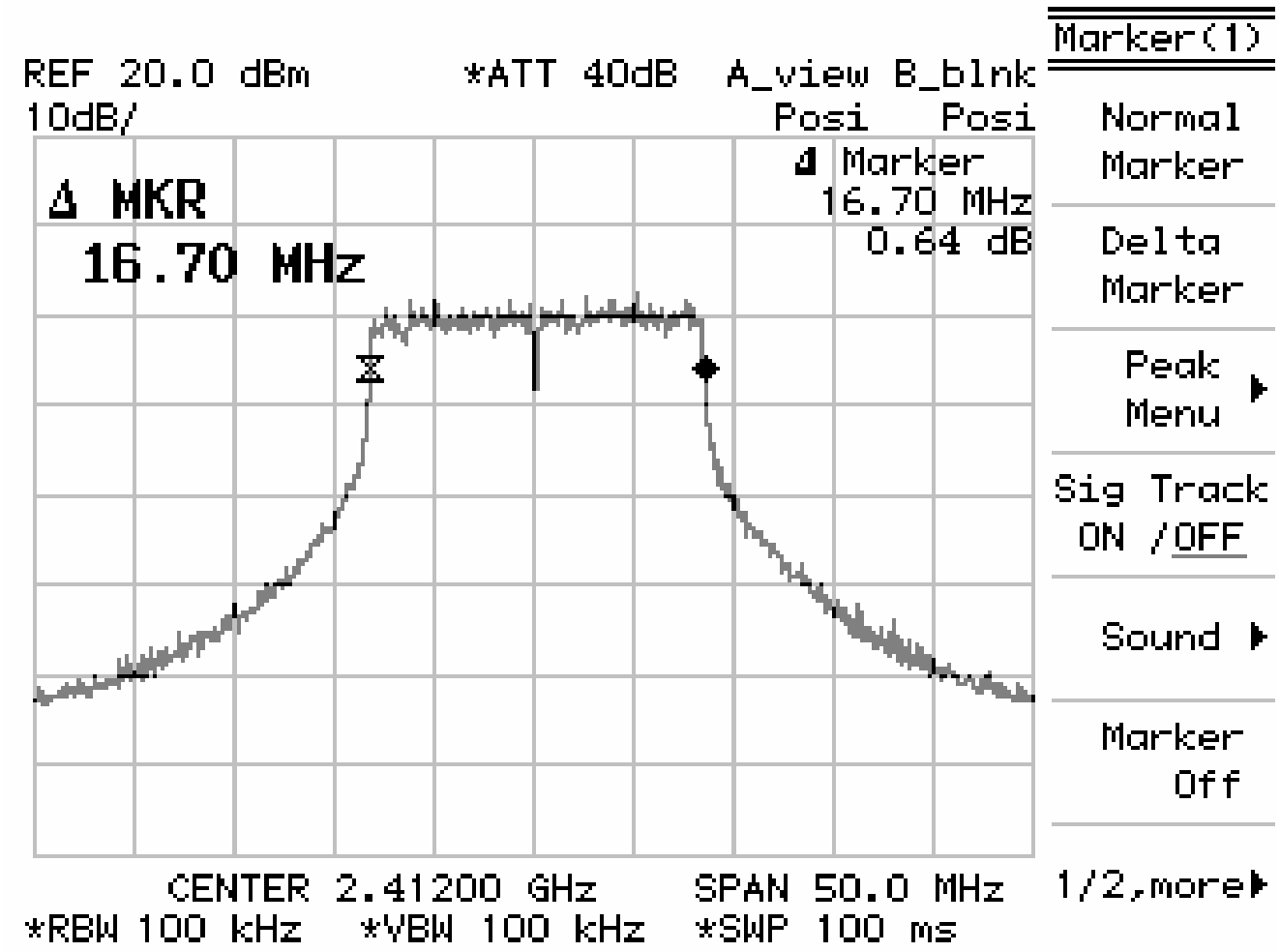

802.11g (2437MHz)

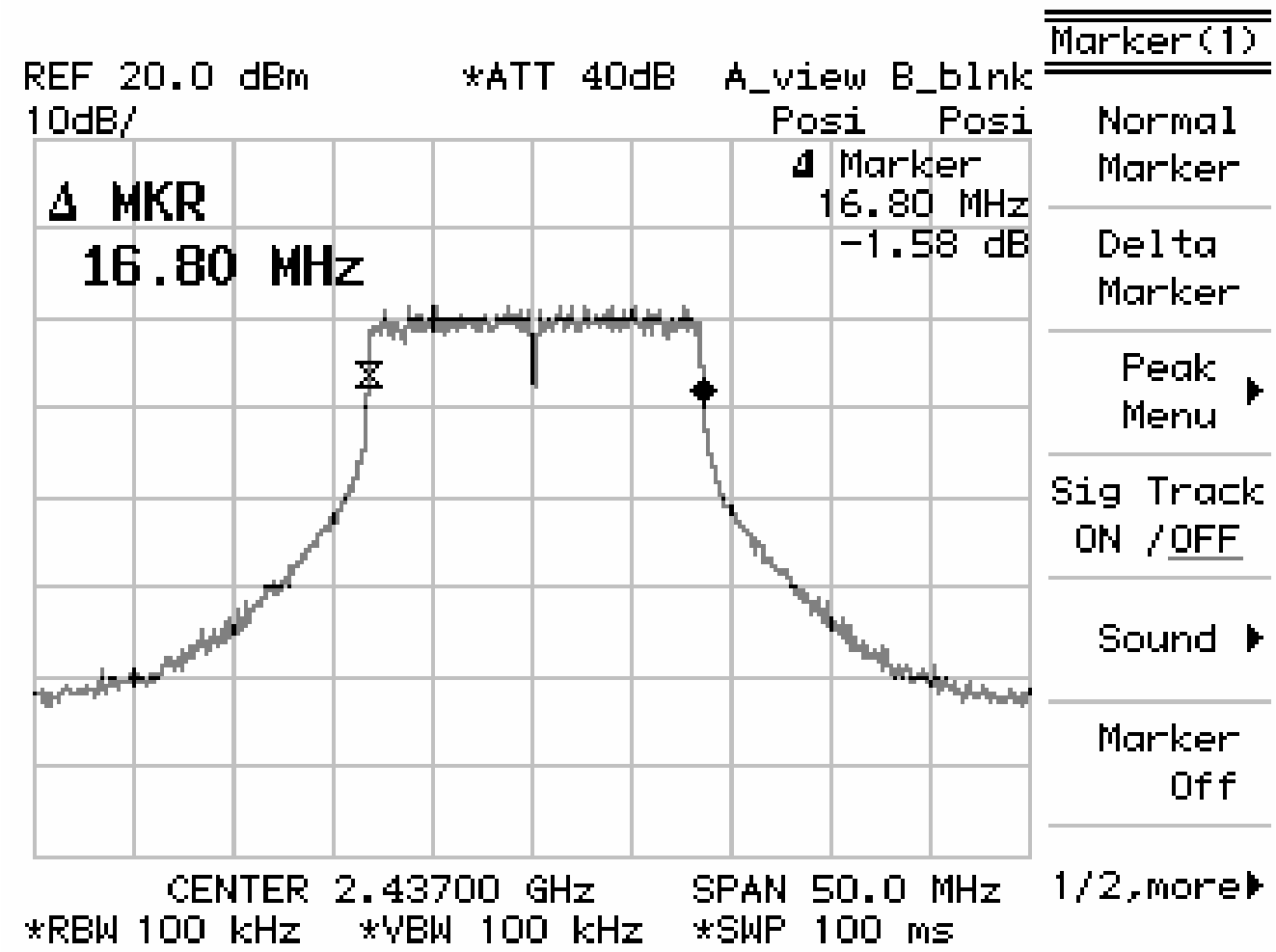

802.11g (2462MHz)

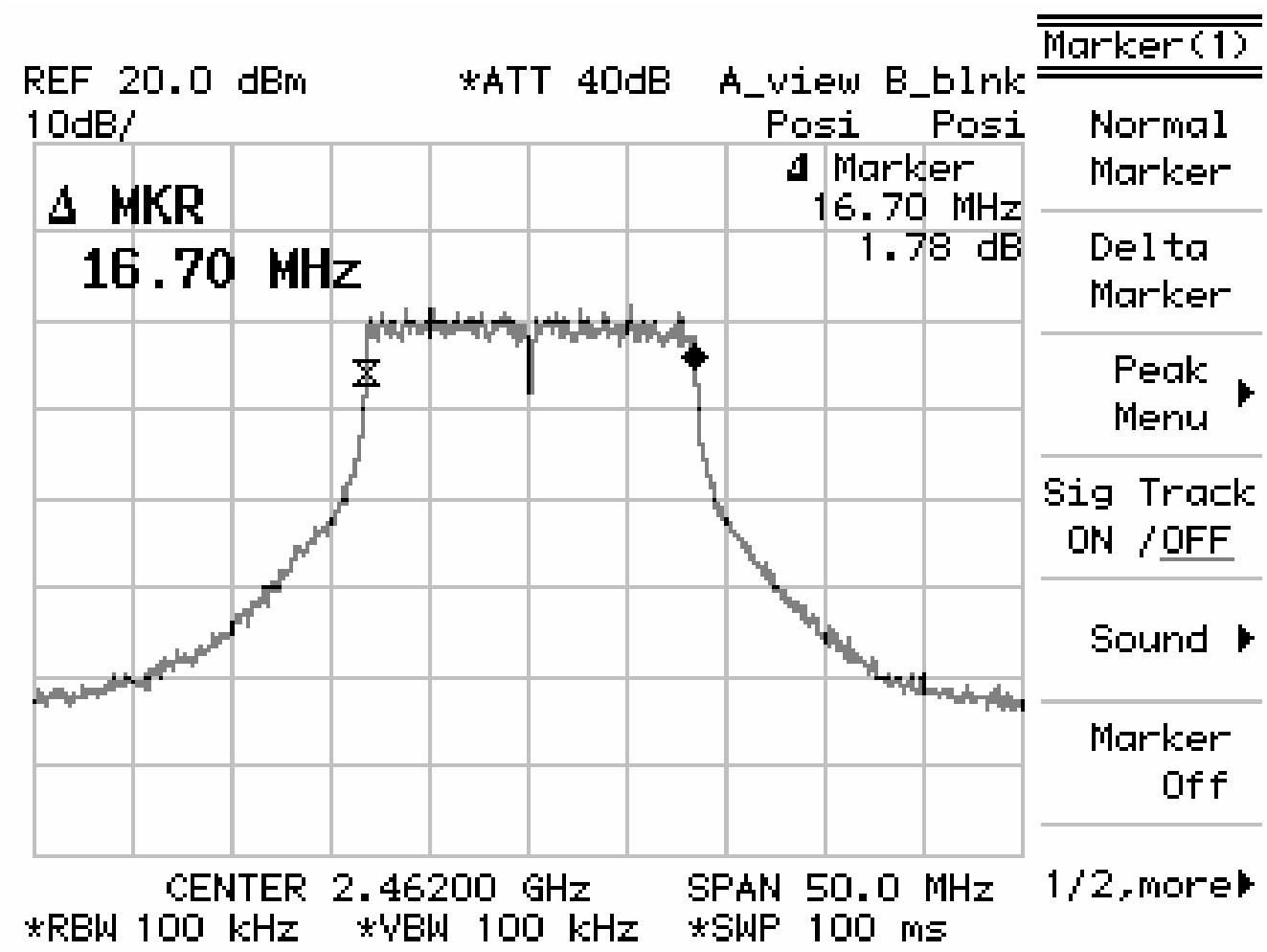

3. Maximum Power Density Requirements

3.1 Test Condition & Setup :

The spectrum analyzer RES BW was set to 3 kHz. The START and STOP frequencies were set to the band edges of the maximum output passband. If there is no clear maximum amplitude in any given portion of the band, it may be necessary to make measurements at a number of bands defined by several START and STOP frequency pairs. The specification calls for a 1 second interval at each 3 kHz bandwidth; total SWEEP TIME is calculated as follows:

SWEEP TIME (SEC) = (Fstop, kHz - Fstart, kHz)/3 kHz

Antenna output of the EUT was coupled directly to spectrum analyzer; if an external attenuator and/or cable was used, these losses are compensated for with the analyzer OFFSET function.

3.2 Test Instruments Configuration:

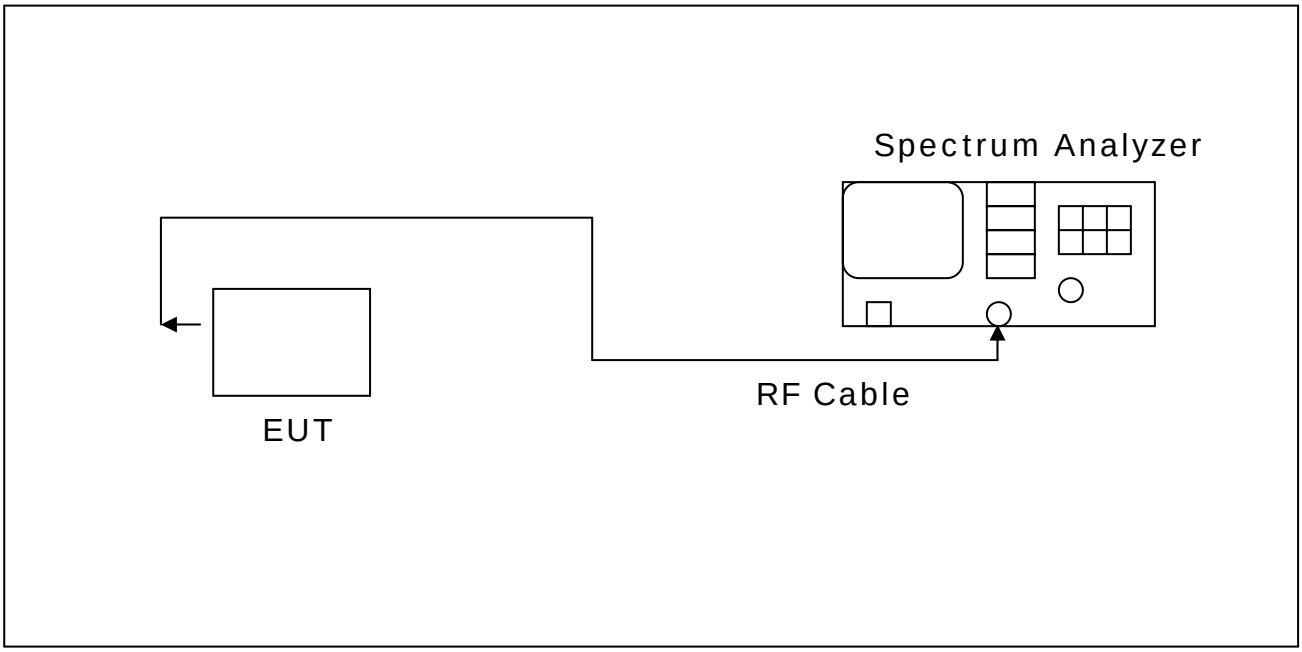

3.3 Test Equipment List:

A. Agilent E4407B 9KHz-26.5GHz Spectrum Analyzer (S/N:A872JS02291)
B. HP 8449B 1GHz-26.5GHz Pre Amplifier (S/N:1982901A91)
E. Shielded Room (MLT-SR1)

3.4 Test Result:

802.11b

Frequency (MHz)	Power Density (dBm)	Required Limit
2412	-9.08	<8dBm
2437	-10.25	<8dBm
2462	-10.39	<8dBm

802.11g

Frequency (MHz)	Power Density (dBm)	Required Limit
2412	-16.58	<8dBm
2437	-16.86	<8dBm
2462	-16.25	<8dBm

Note : Test Graphs See next page.

802.11b (2412MHz)

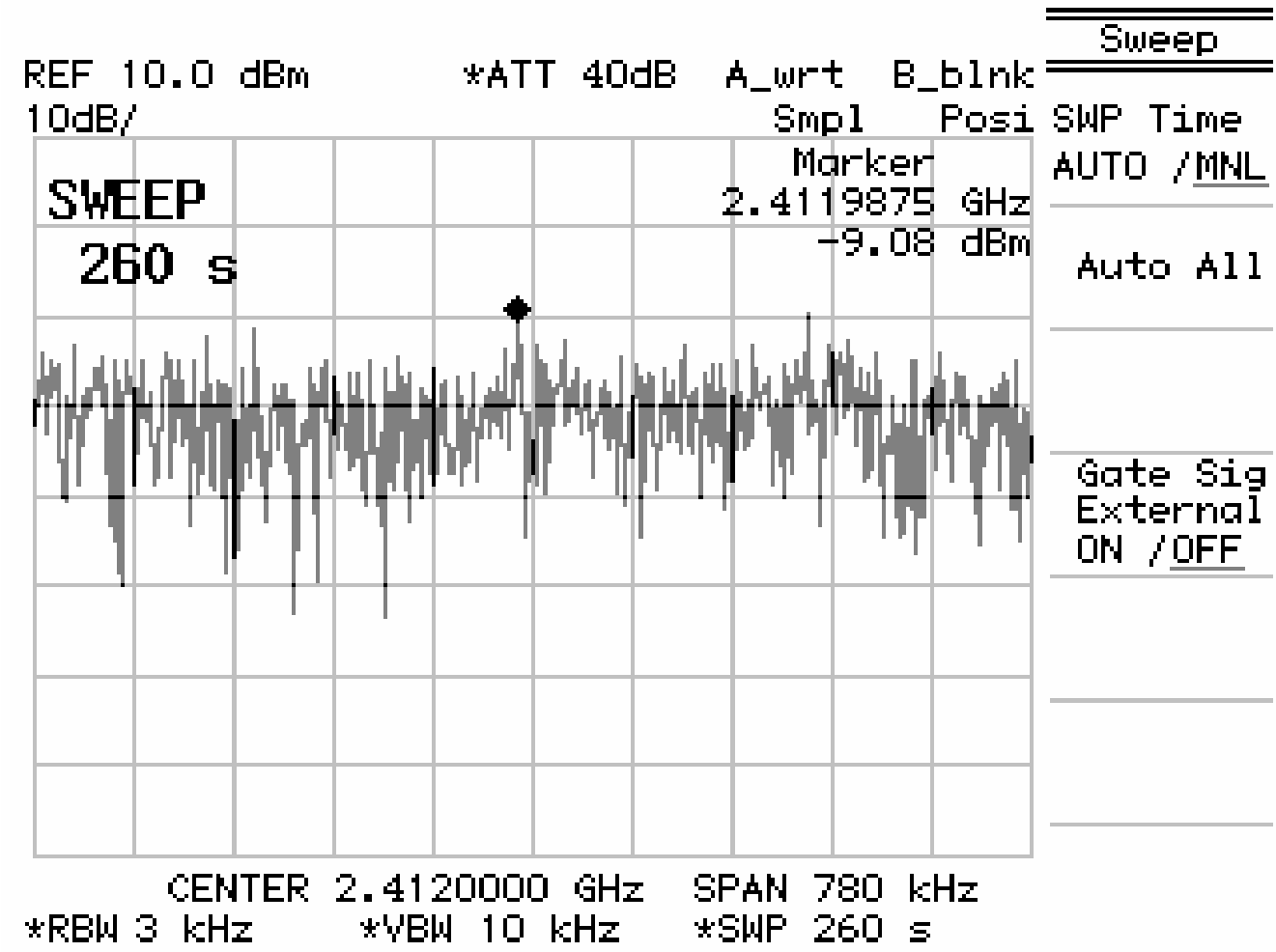

802.11b (2437MHz)

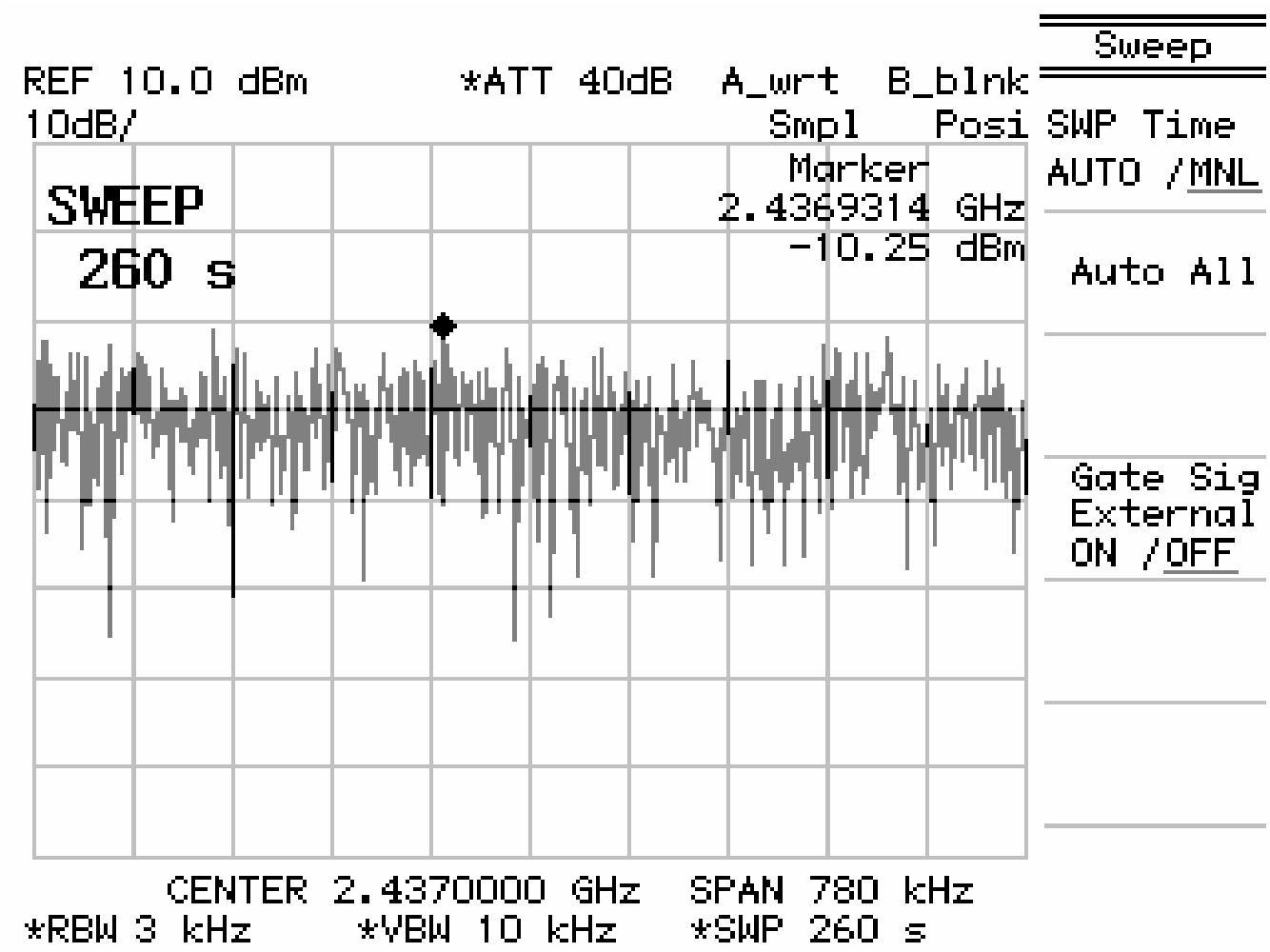

802.11b (2462MHz)

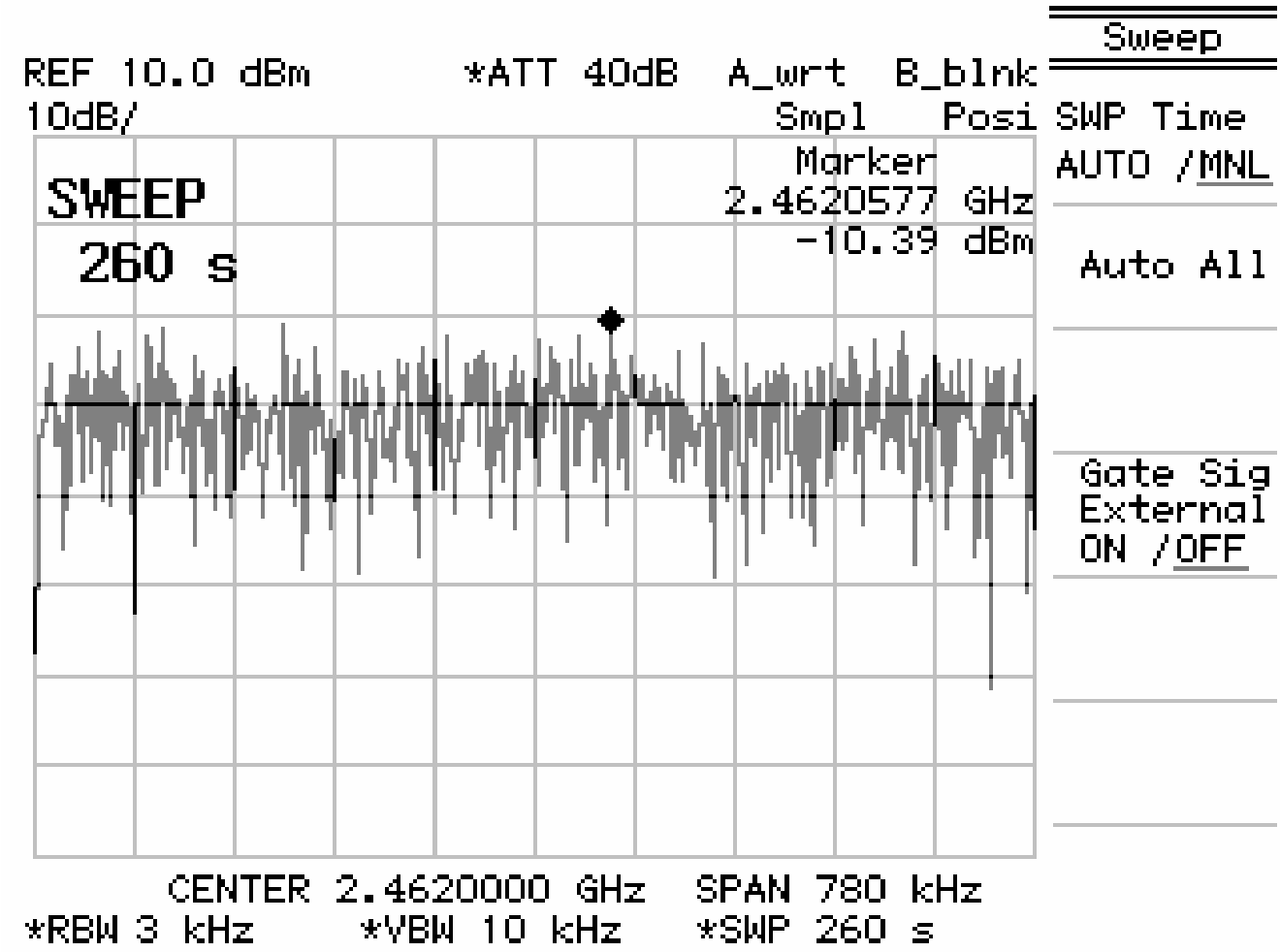

802.11g (2412MHz)

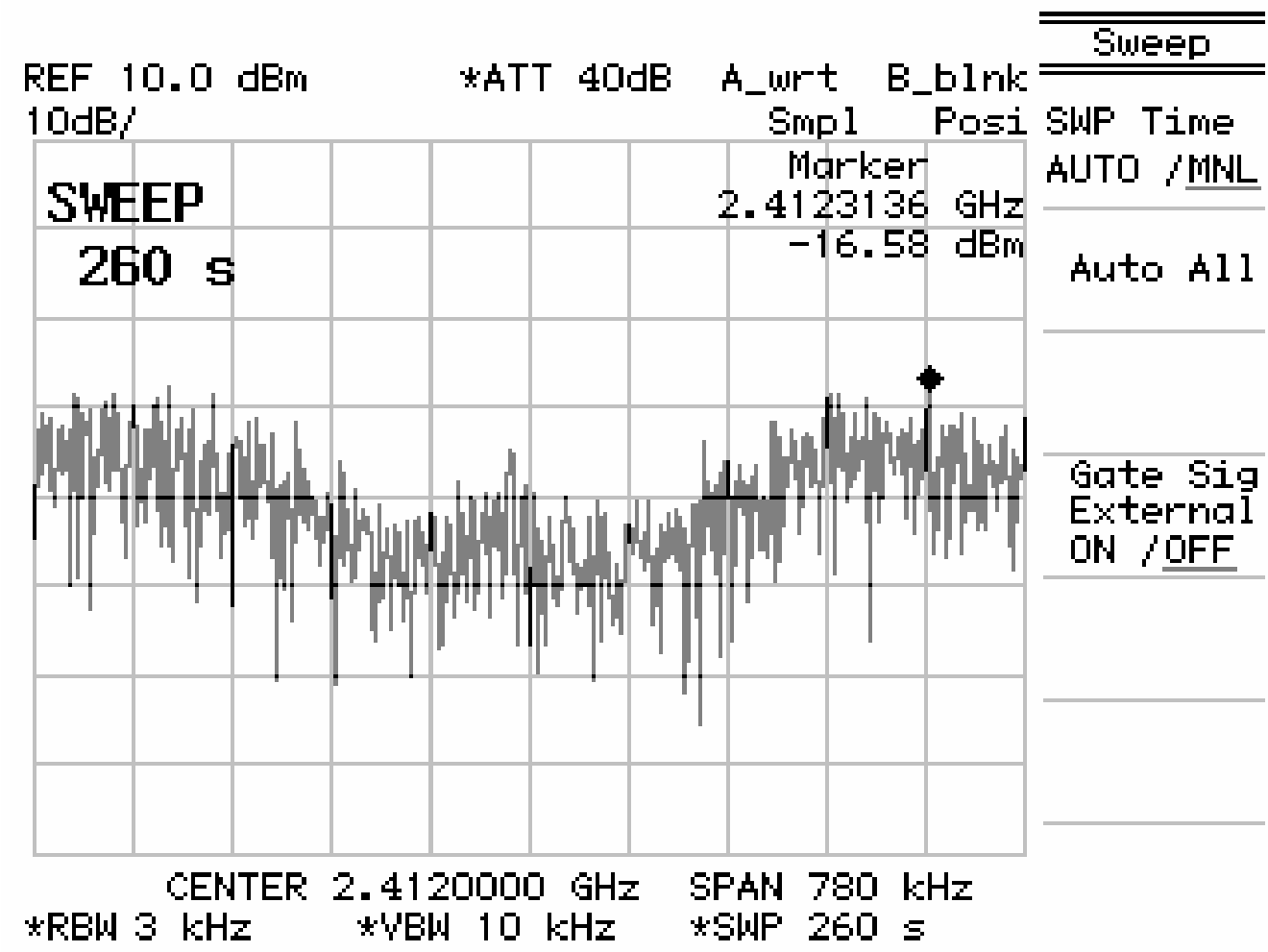

802.11g (2437MHz)

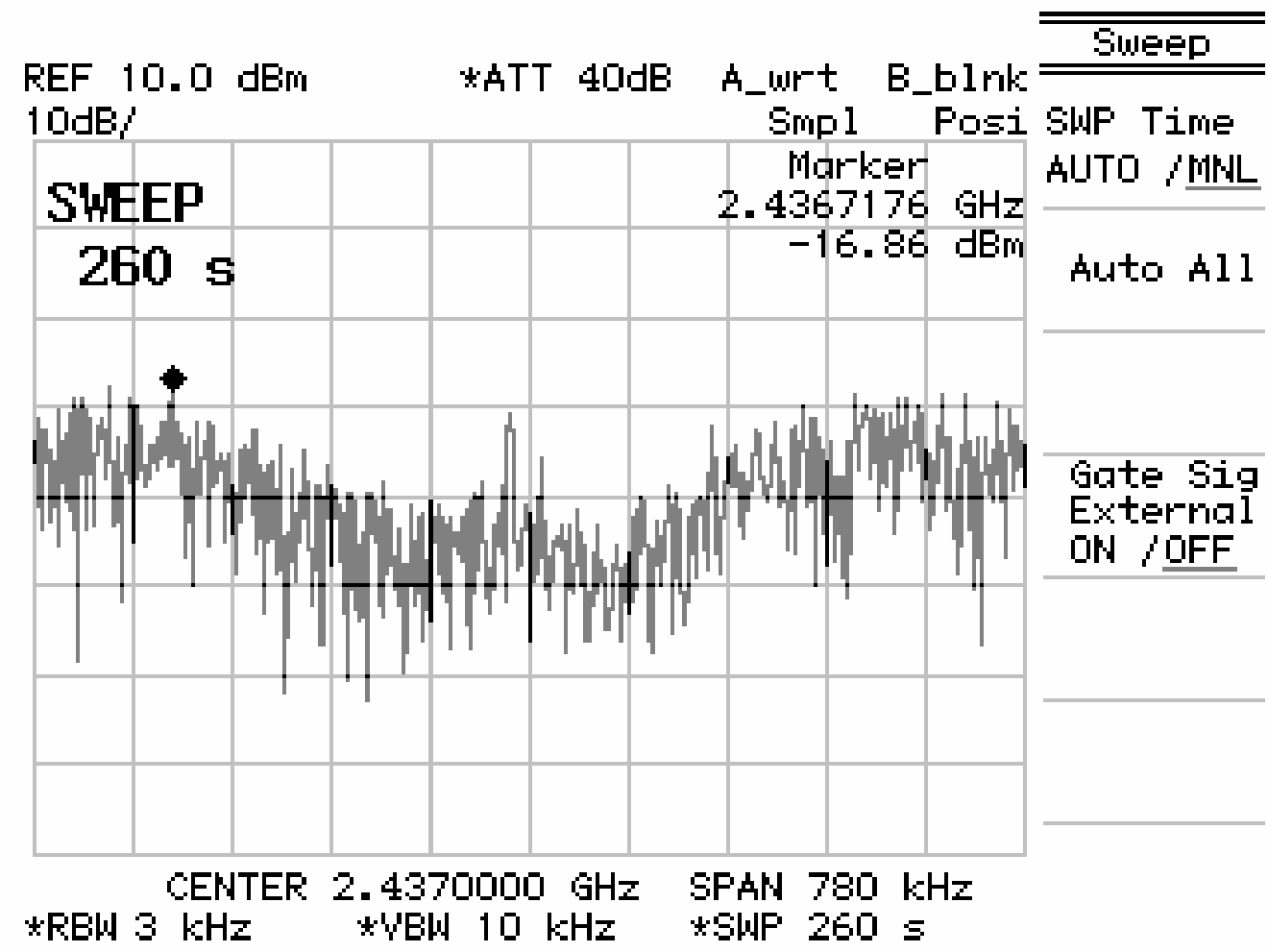

802.11g (2462MHz)

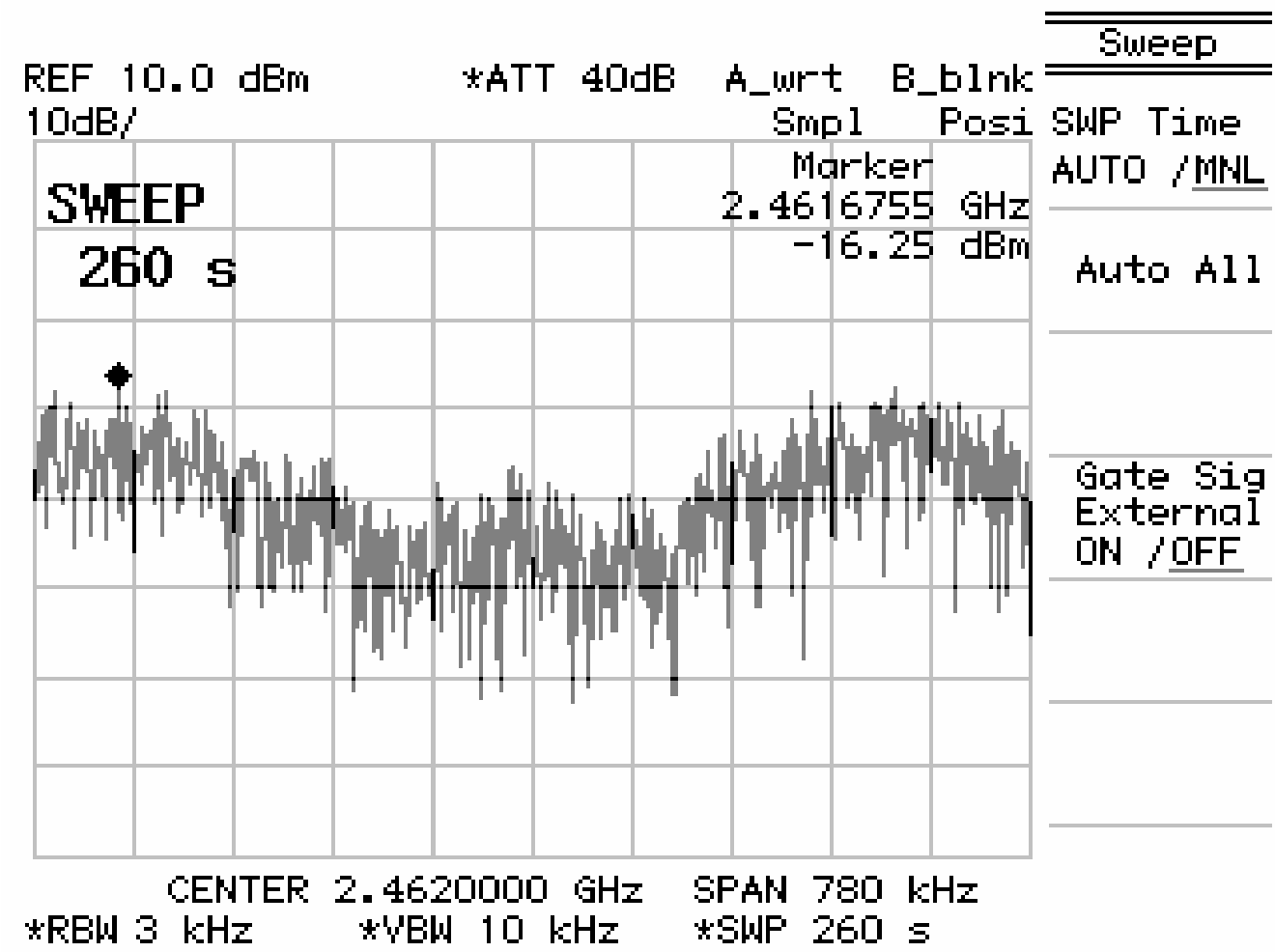

4. Out of Band Conducted Emissions Requirements

4.1 Test Condition & Setup :

In any 100 kHz bandwidth outside the EUT pass-band, the RF power produced by the modulation products of the spreading sequence, the information sequence, and the carrier frequency shall be at least 20 dB below that of the maximum in-band 100 kHz emission, antenna output of the EUT was coupled directly to spectrum analyzer; if an external attenuator and/or cable was used, these losses are compensated for with the analyzer OFFSET function.

All other types of emissions from the EUT shall meet the general limits for radiated frequencies outside the pass-band. the test was performed at 3 channels (Channel 1, 6,11)

4.2 Test Instruments Configuration:

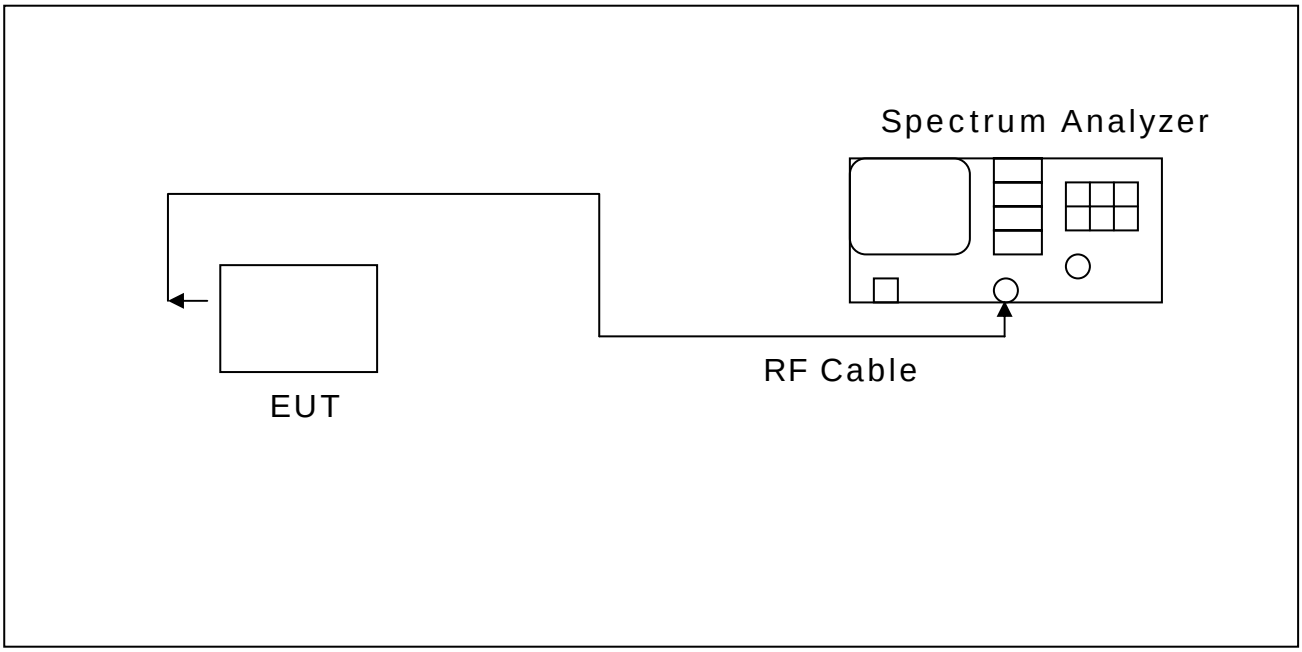

4.3 Test Equipment List:

A. Agilent E4407B 9KHz-26.5GHz Spectrum Analyzer (S/N:A872JS02291)
B. Shielded Room (MLT-SR1)

4.4 Test Result:

Refer to attached data sheets. Data shows out of band emissions are suppressed well below the -20 dBc minimum required by the Rules.

Note : Test Graphs See next page.

802.11b Channel 01 (1 of 5)

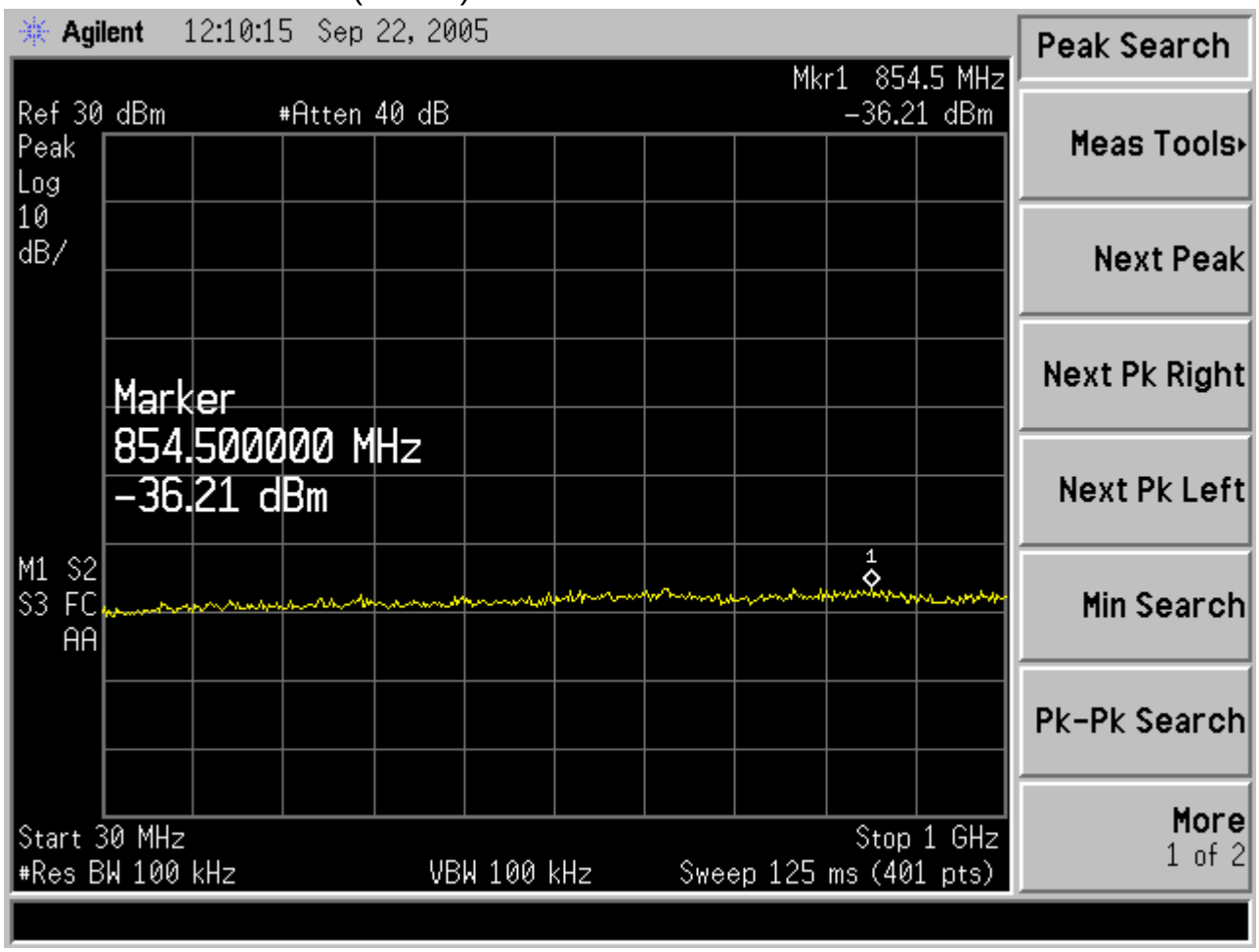

802.11b Channel 01 (2 of 5)

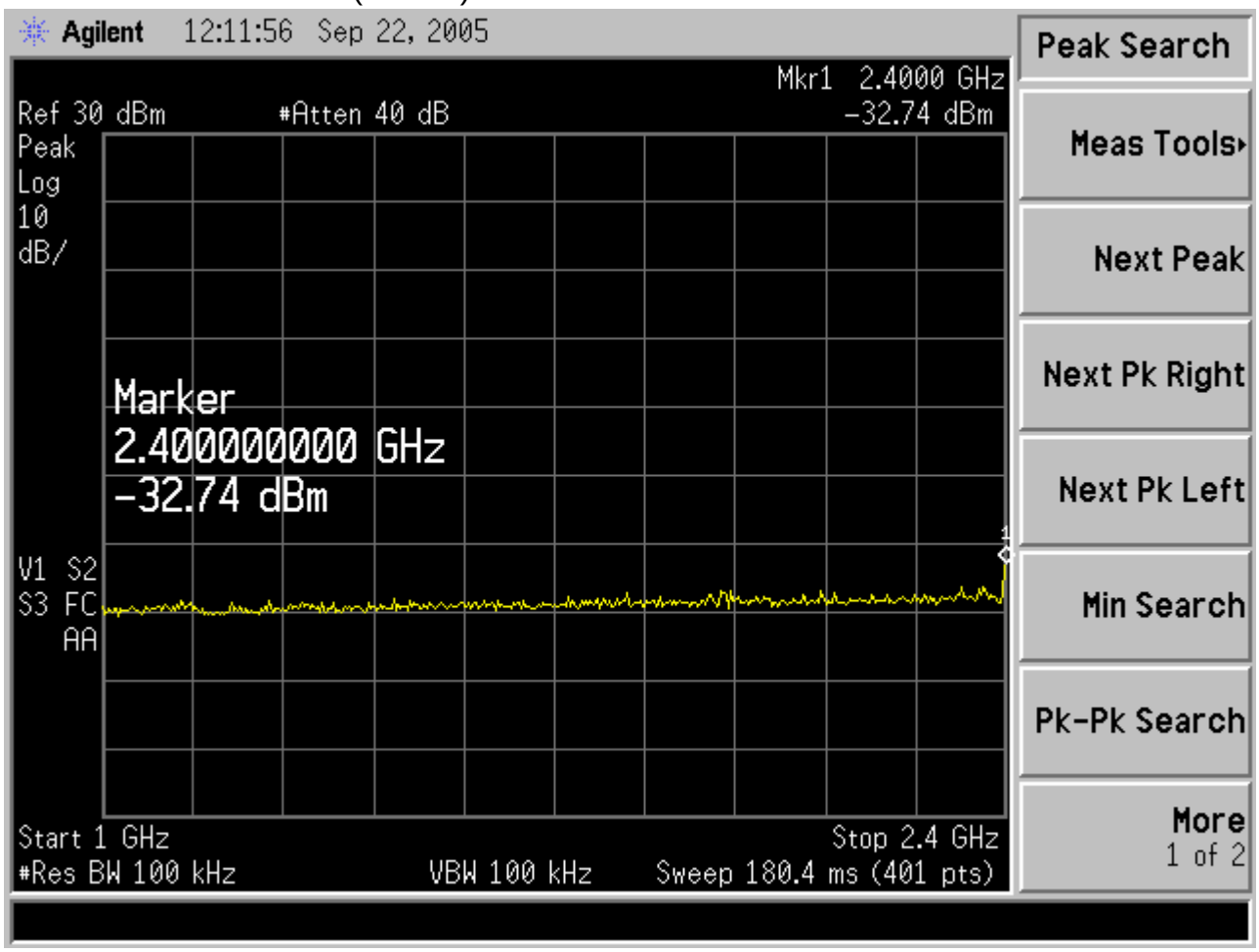

802.11b Channel 01 (3 of 5)

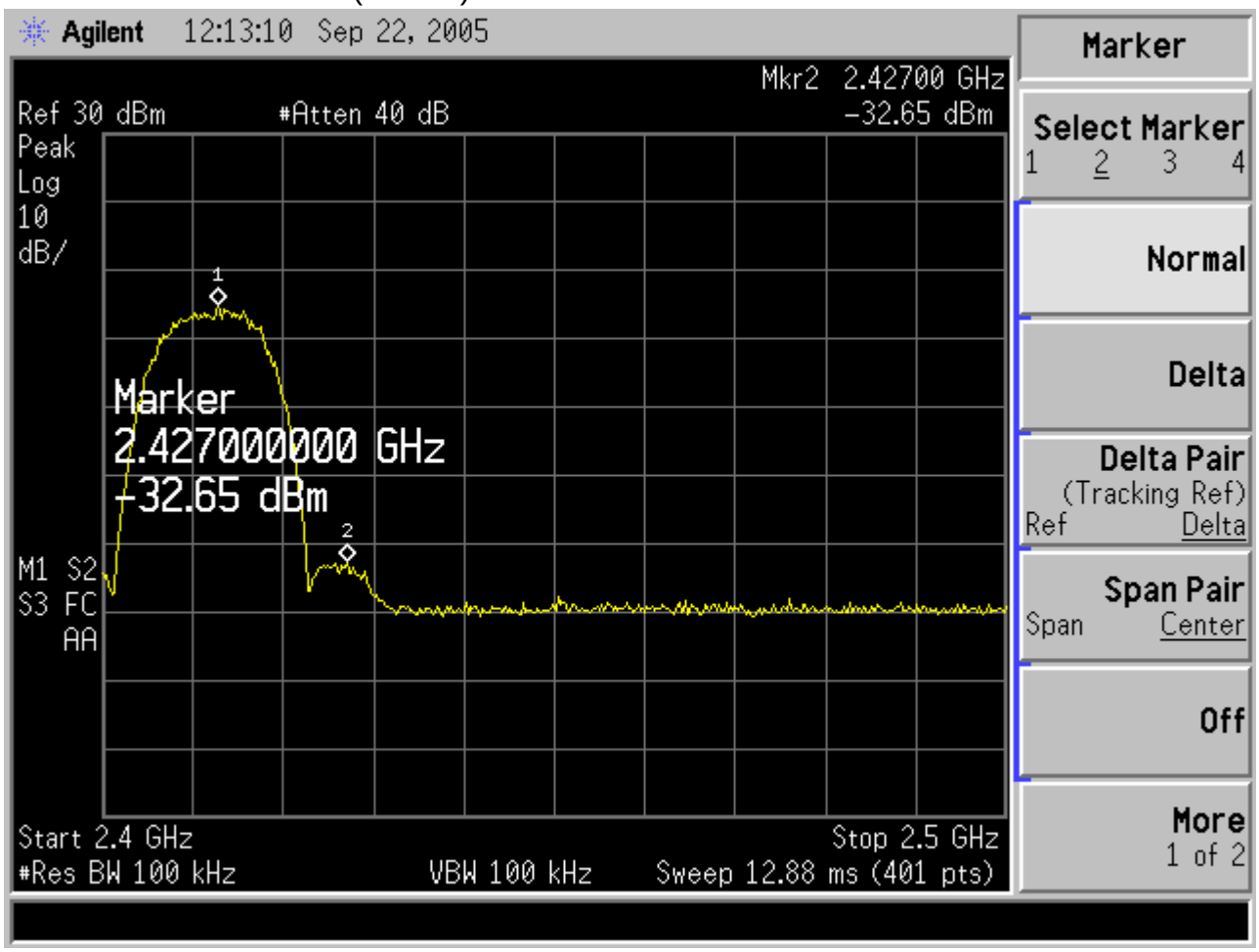

802.11b Channel 01 (4 of 5)

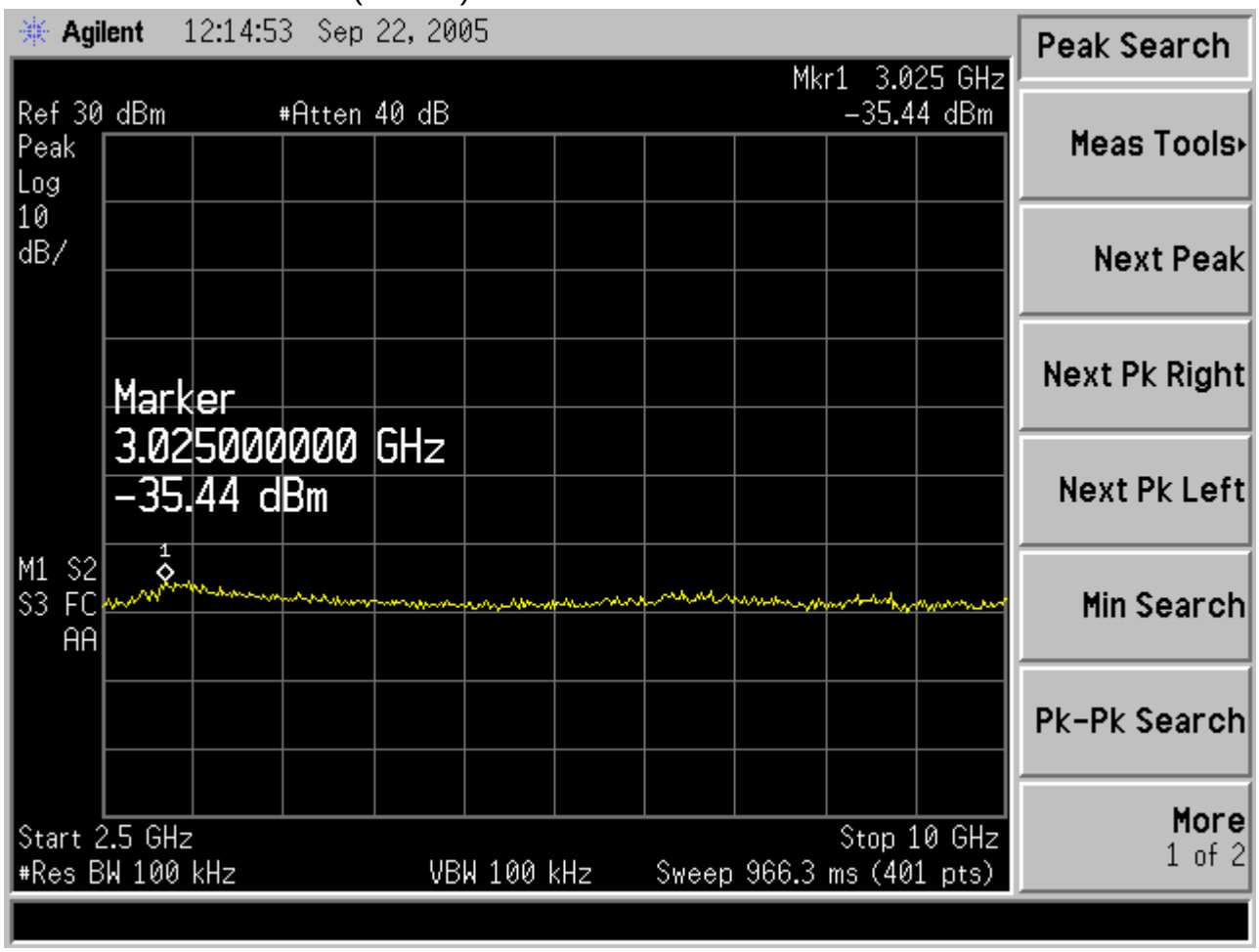

802.11b Channel 01 (5 of 5)

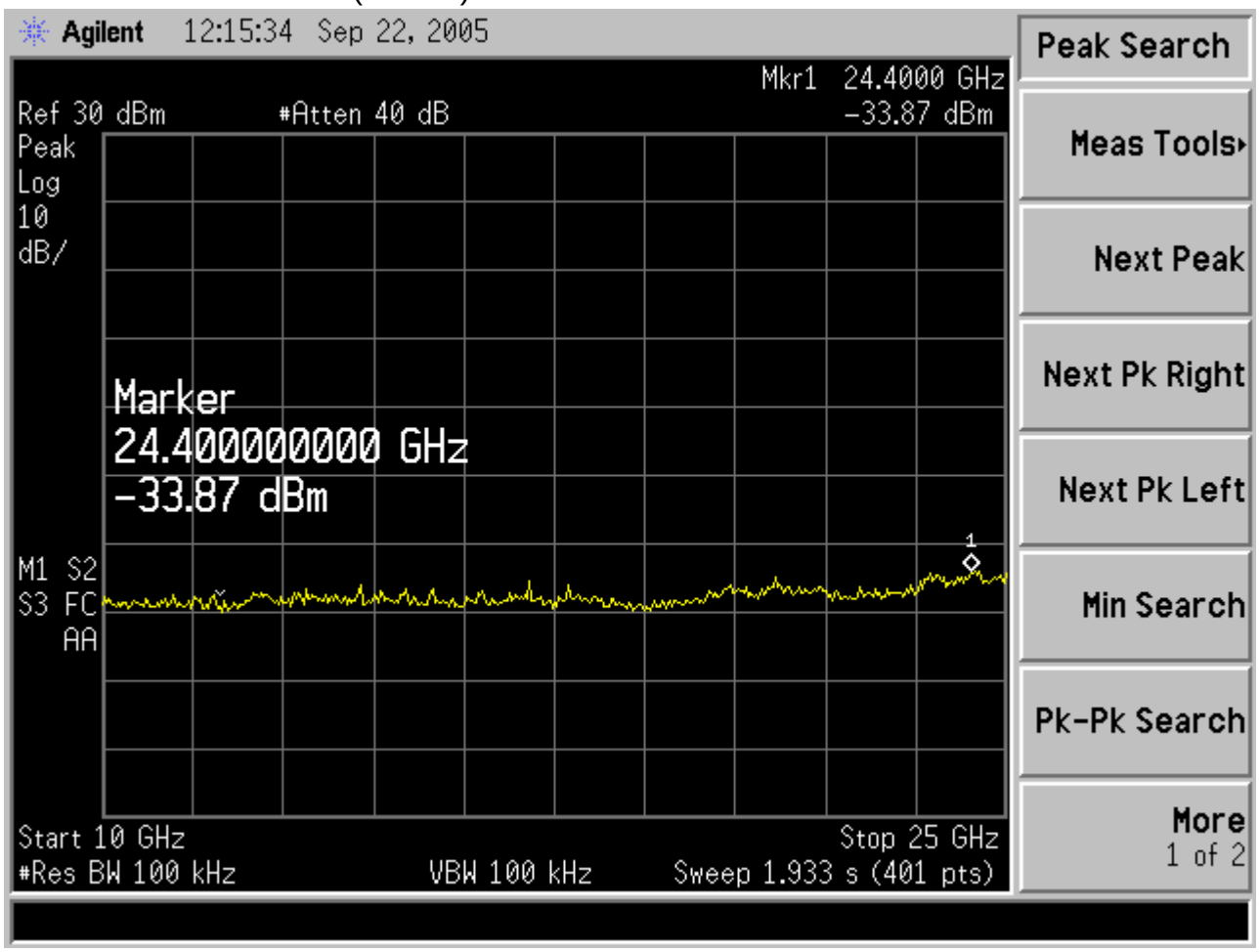

802.11b Channel 06 (1 of 5)

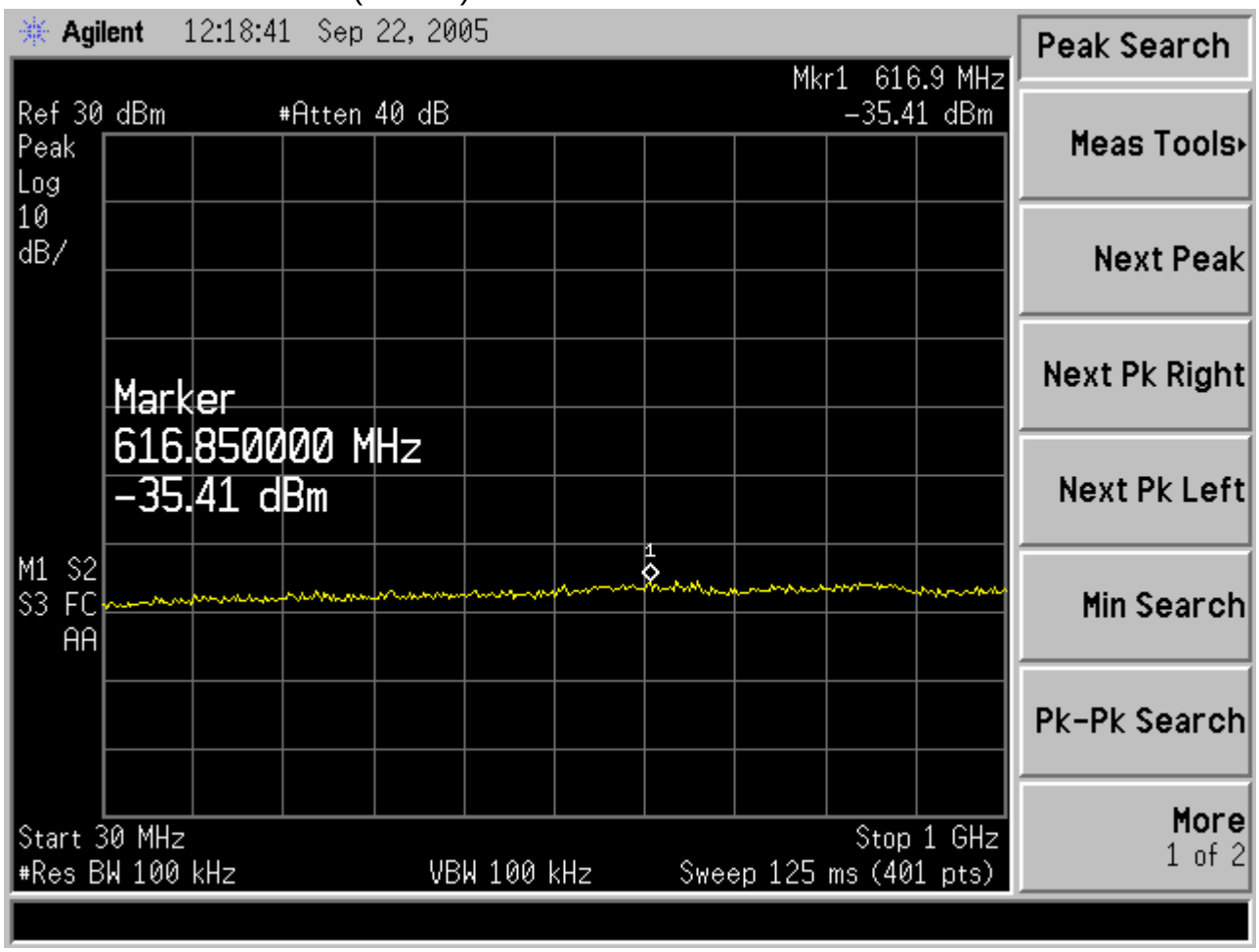

802.11b Channel 06 (2 of 5)

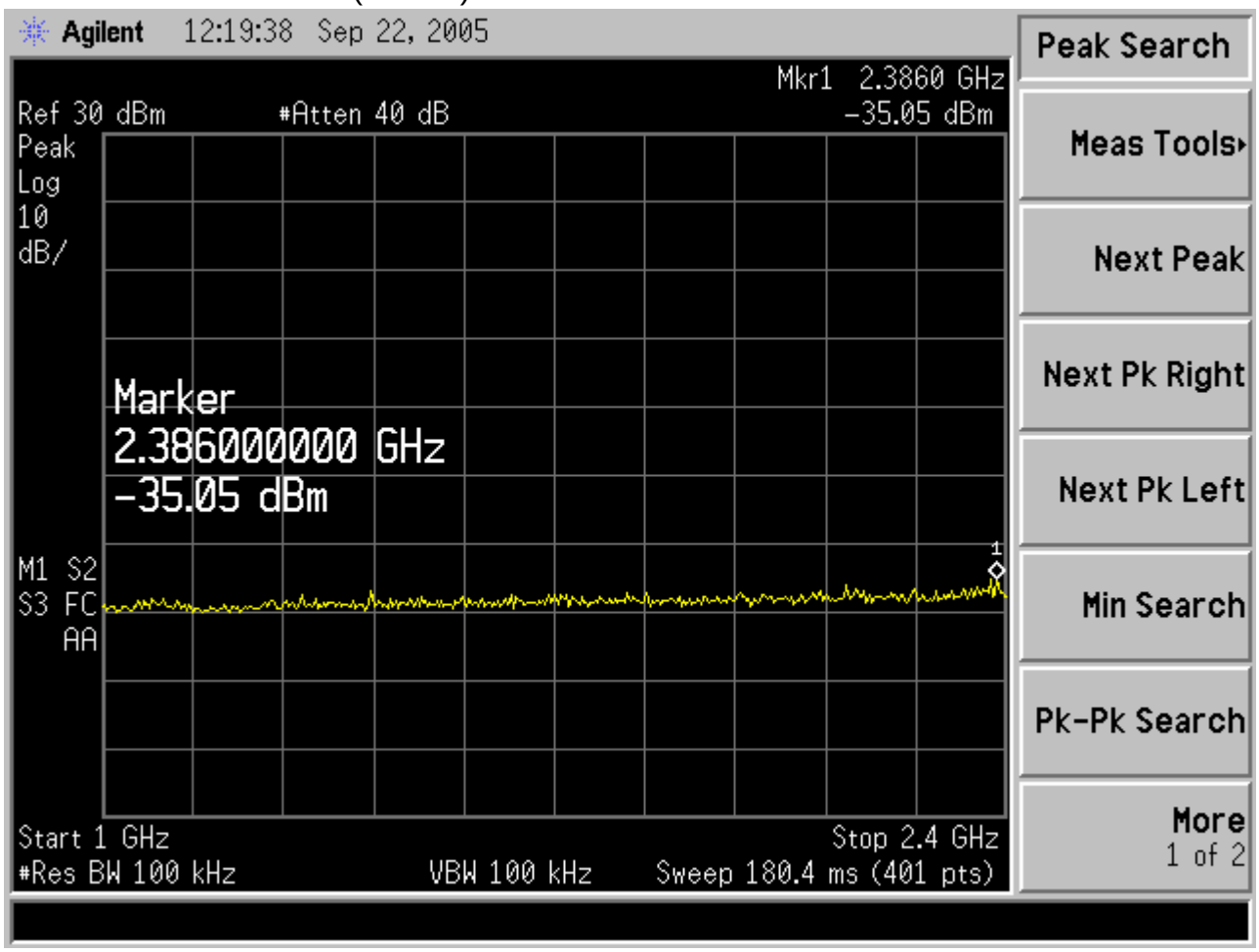

802.11b Channel 06 (3 of 5)

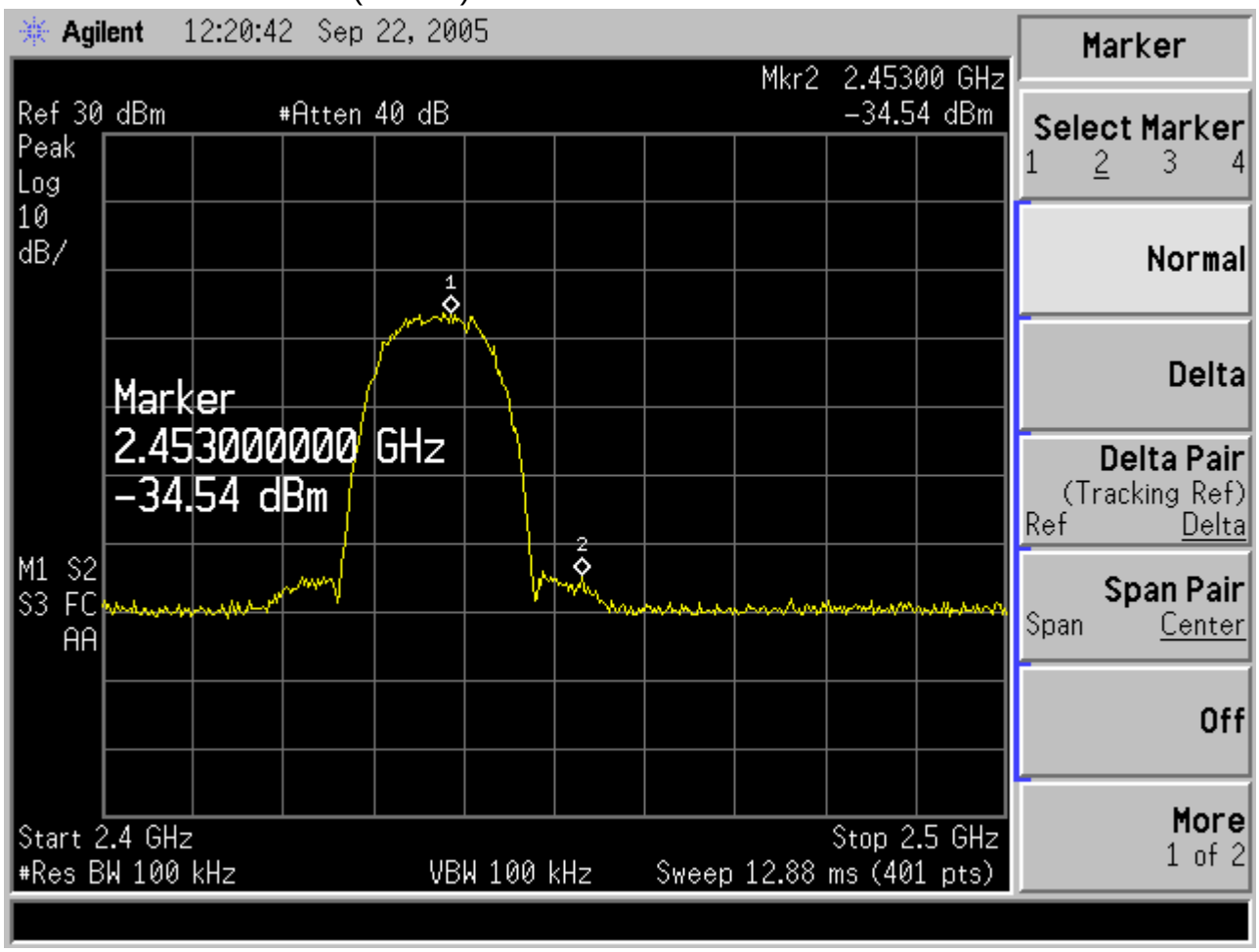

802.11b Channel 06 (4 of 5)

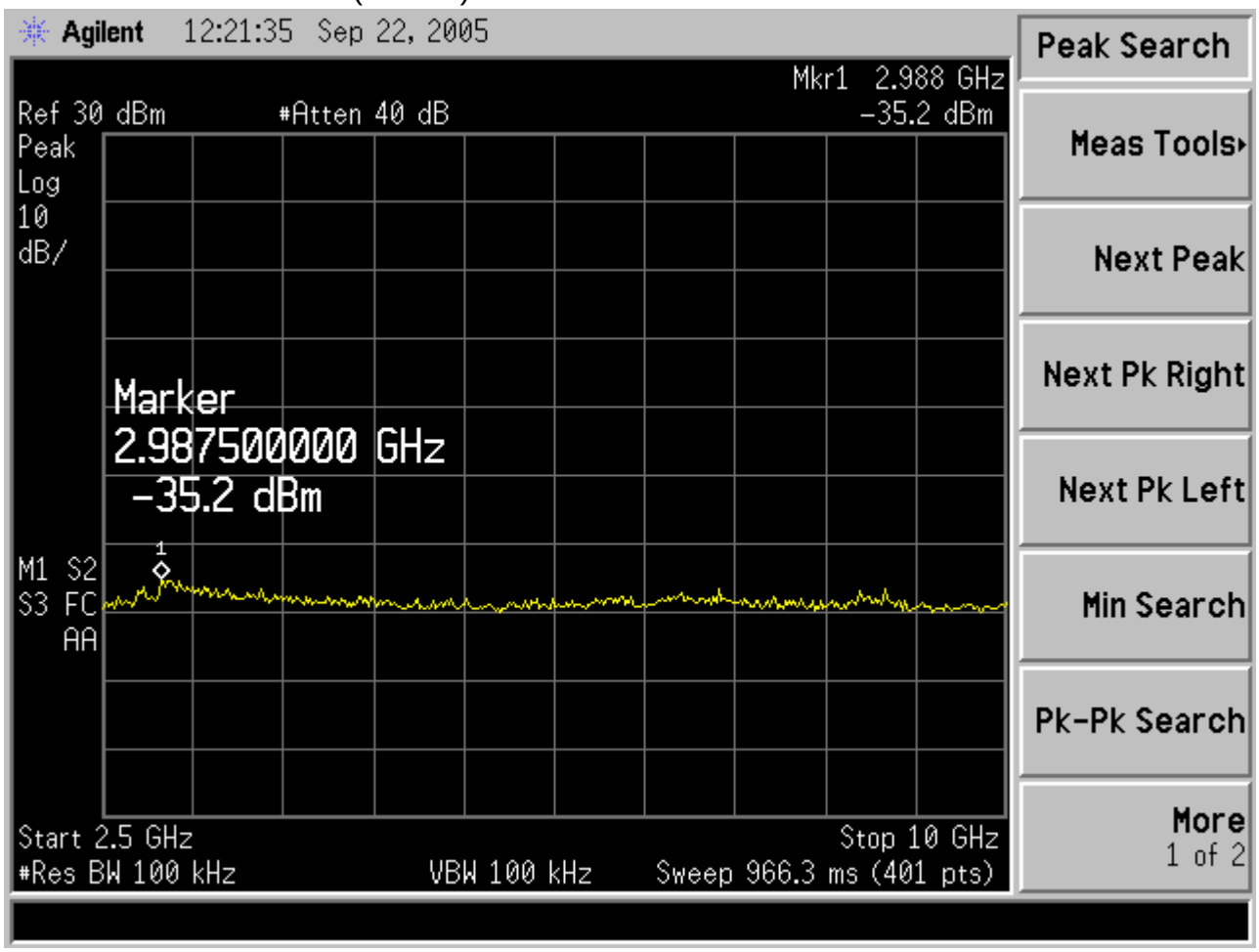

802.11b Channel 06 (5 of 5)

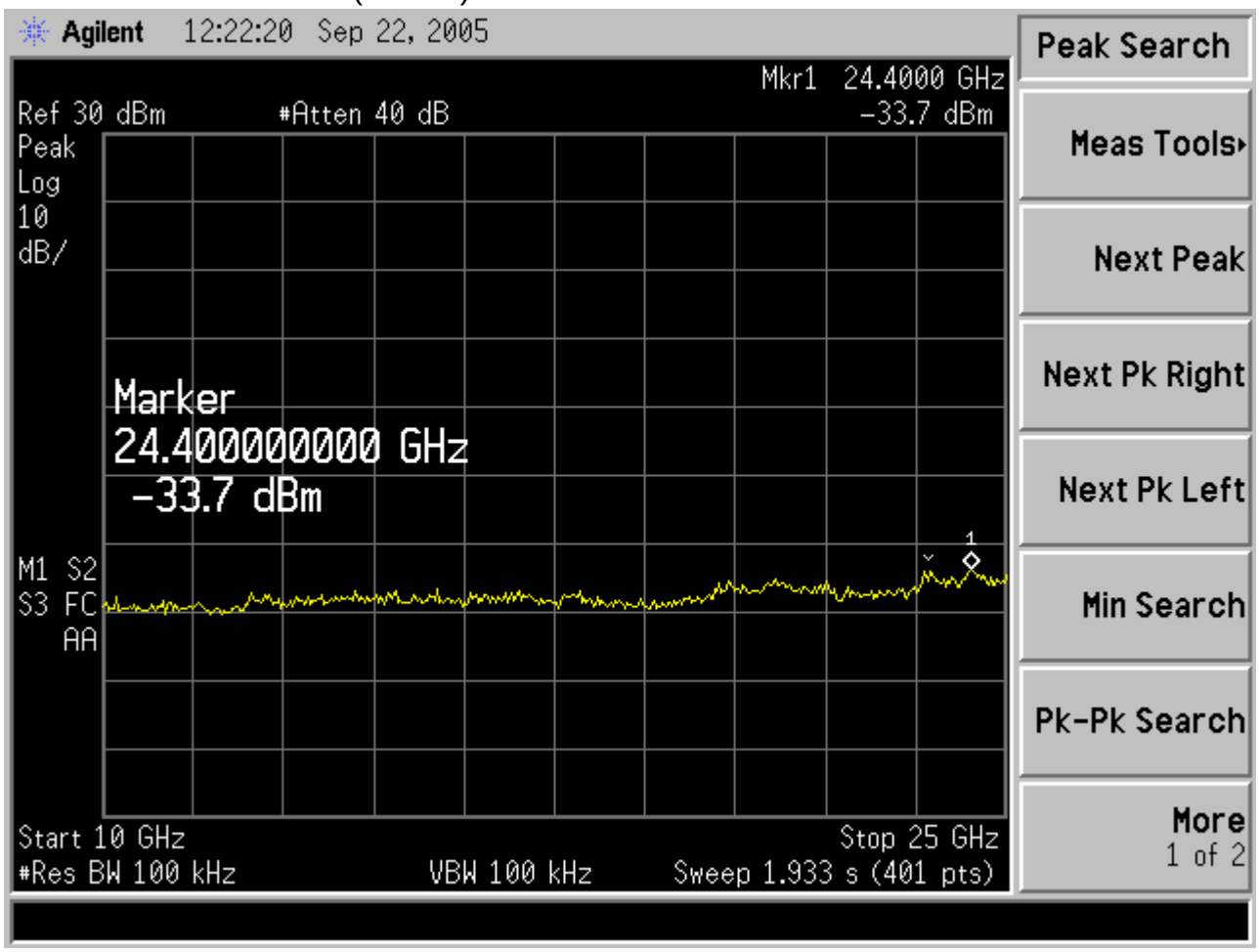

802.11b Channel 11 (1 of 5)

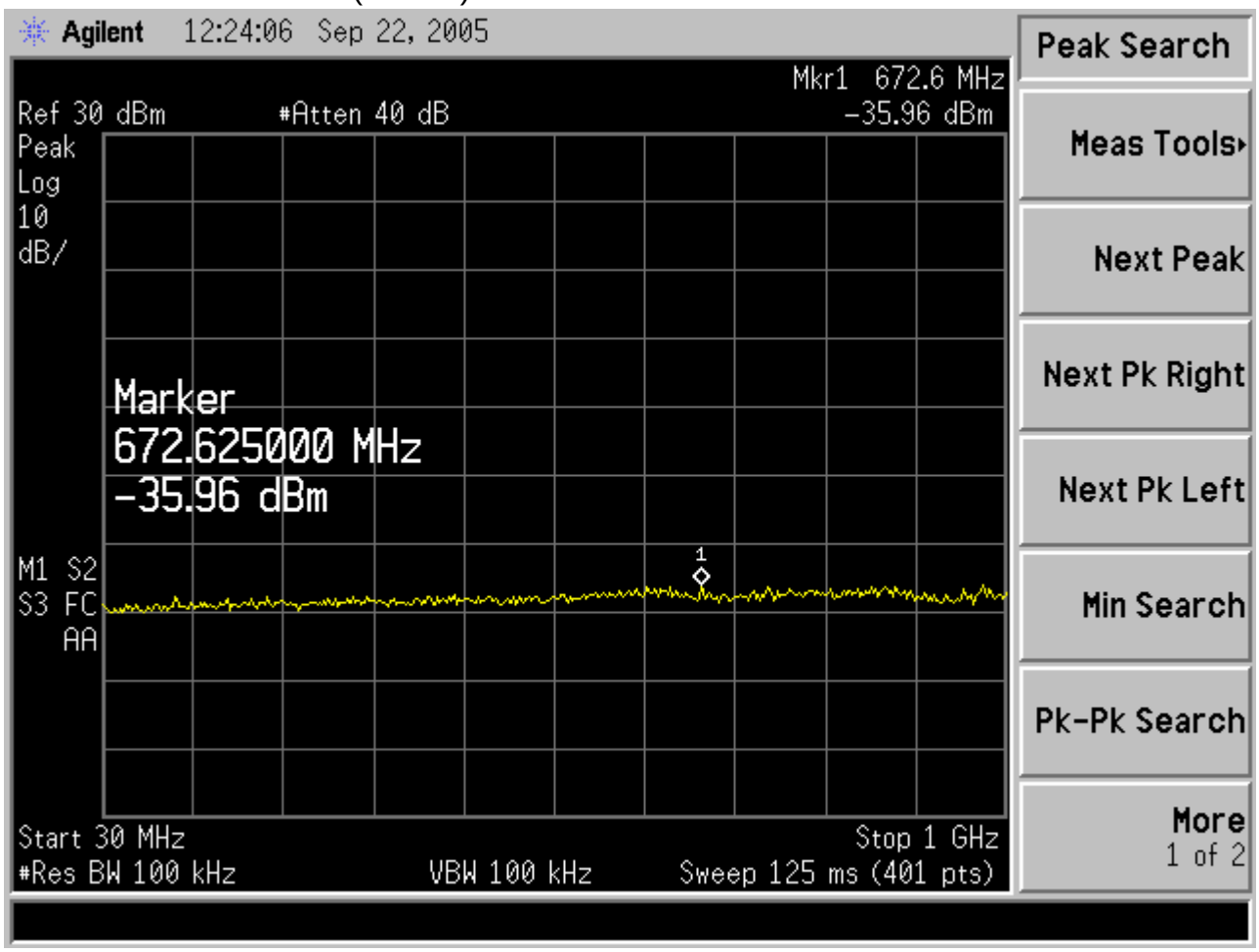

802.11b Channel 11 (2 of 5)

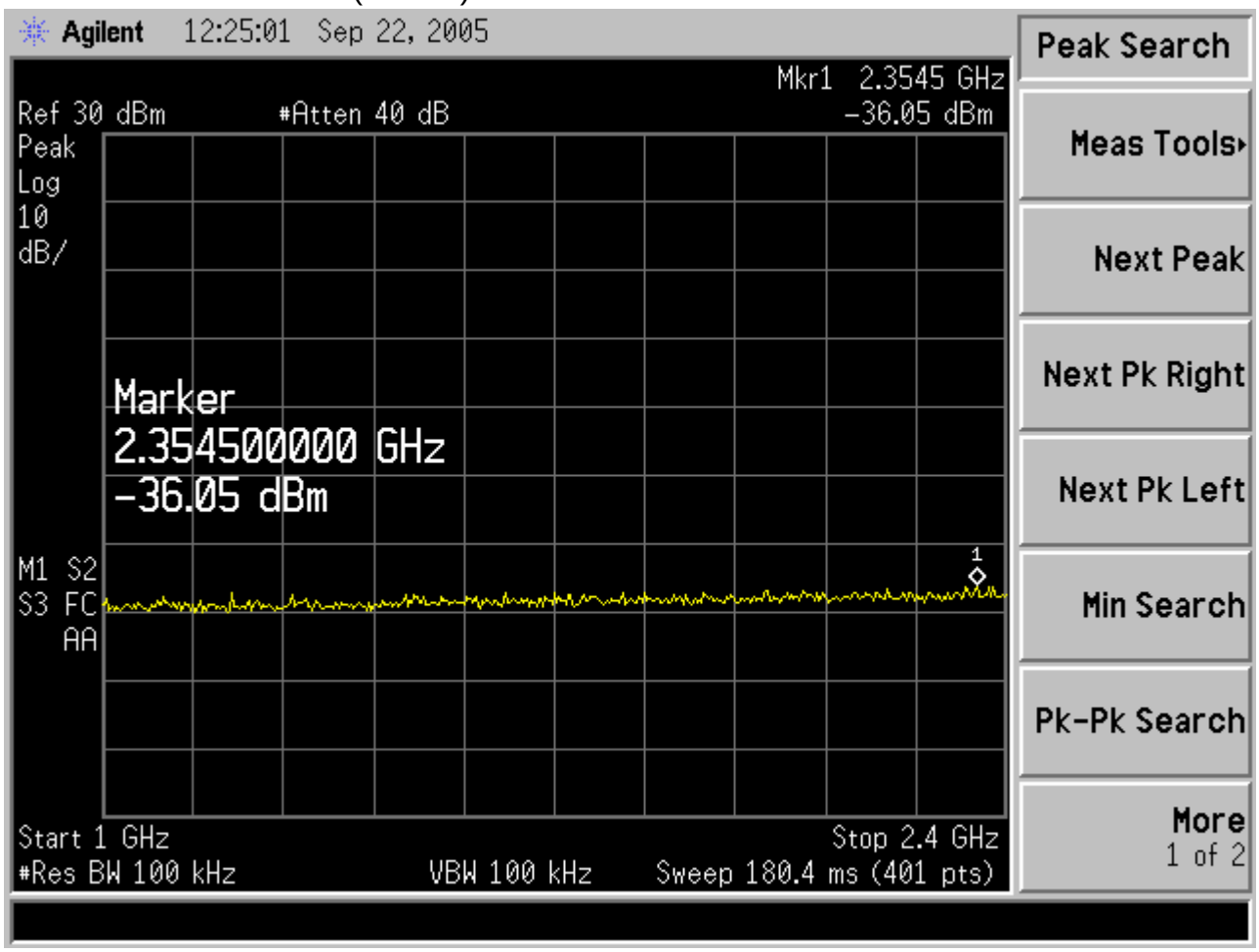

802.11b Channel 11 (3 of 5)

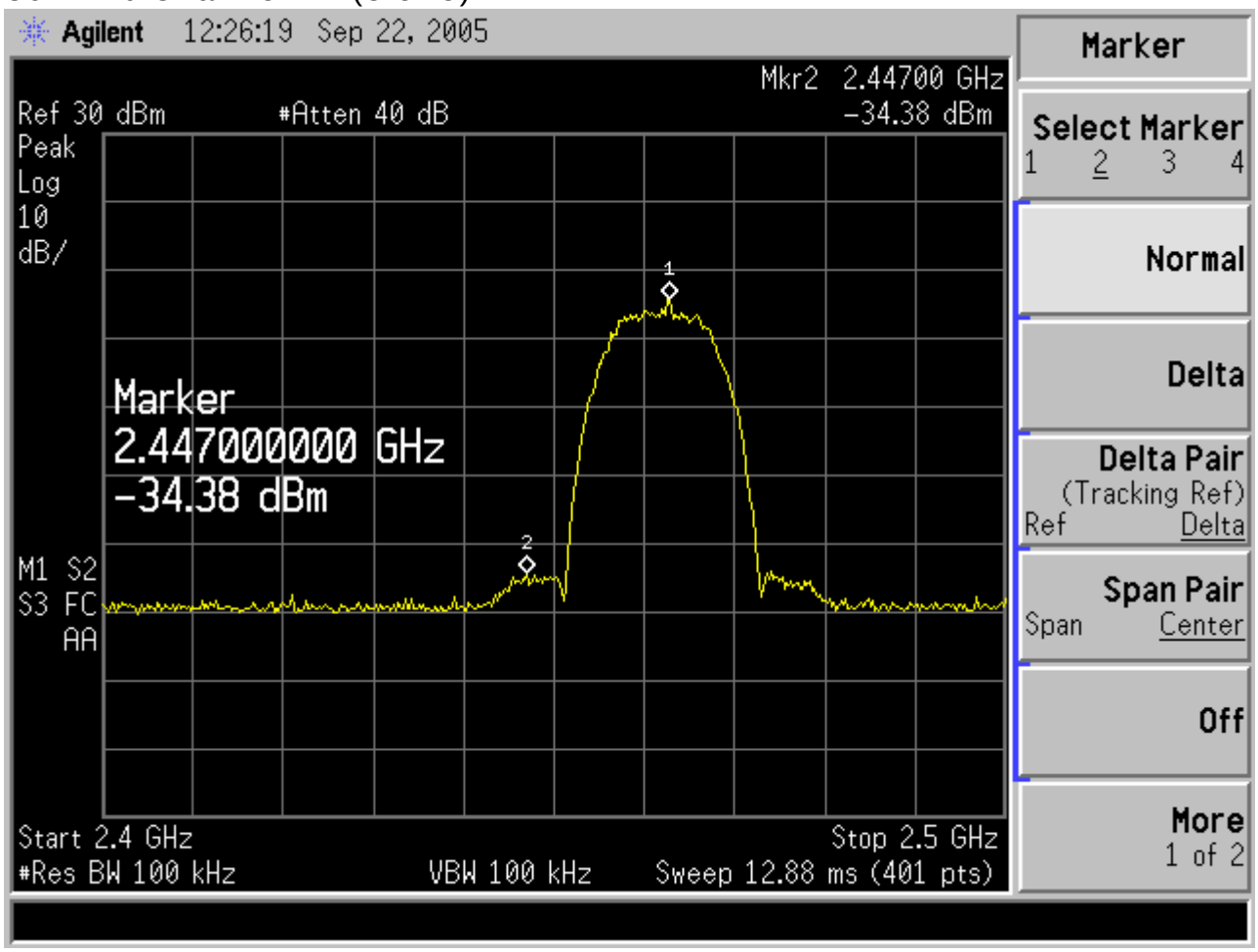

802.11b Channel 11 (4 of 5)

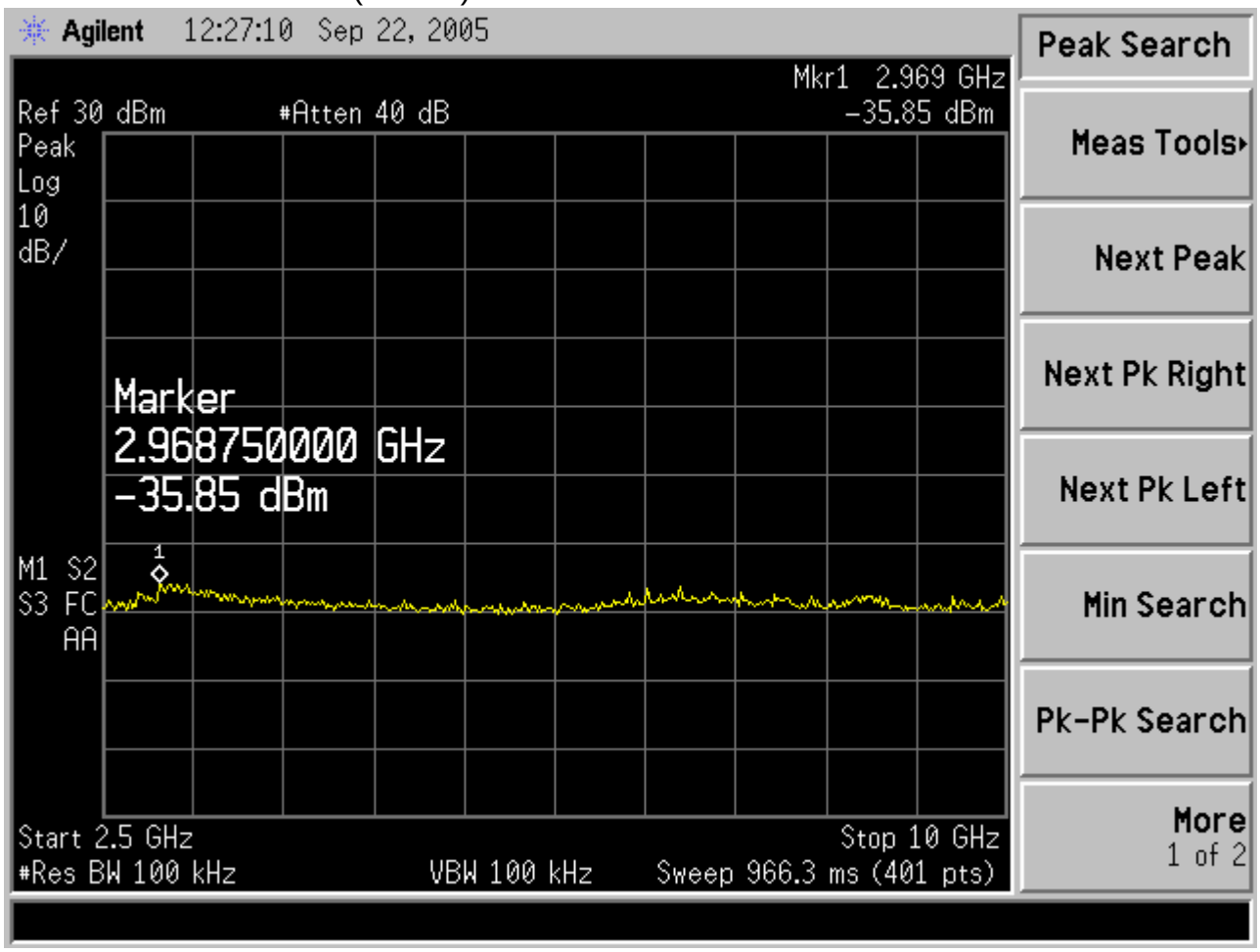

802.11b Channel 11 (5 of 5)

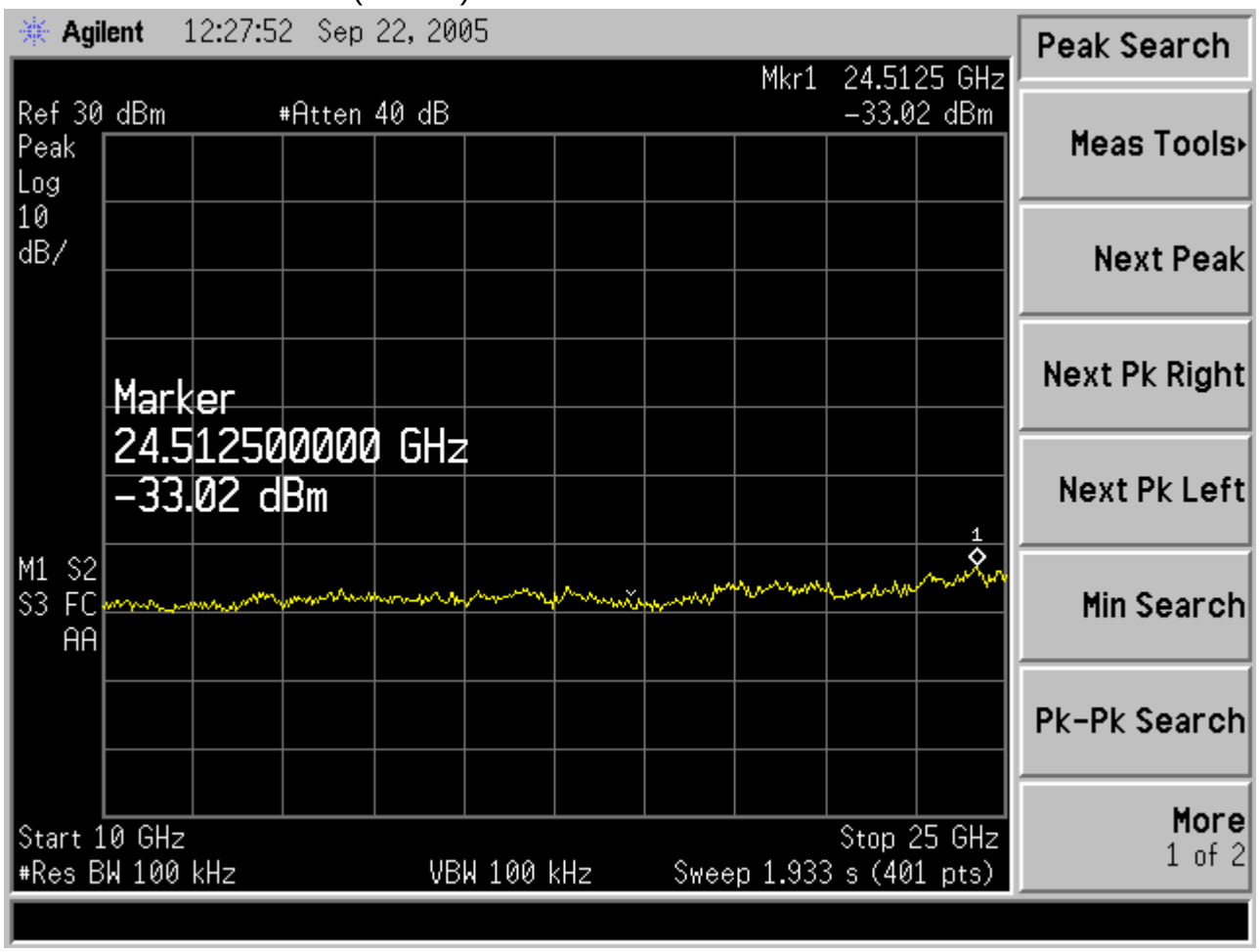

802.11g Channel 01 (1 of 5)

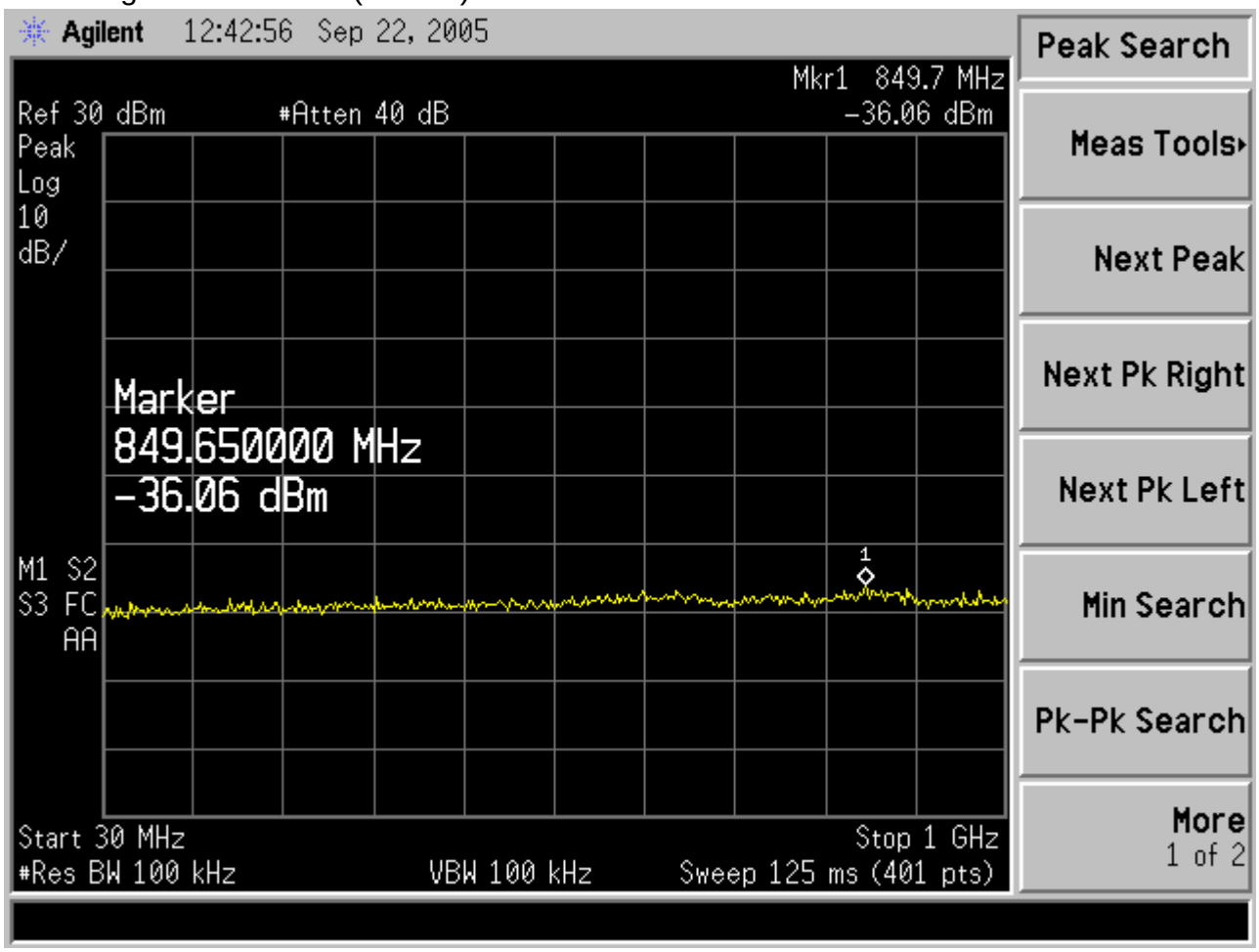

802.11g Channel 01 (2 of 5)

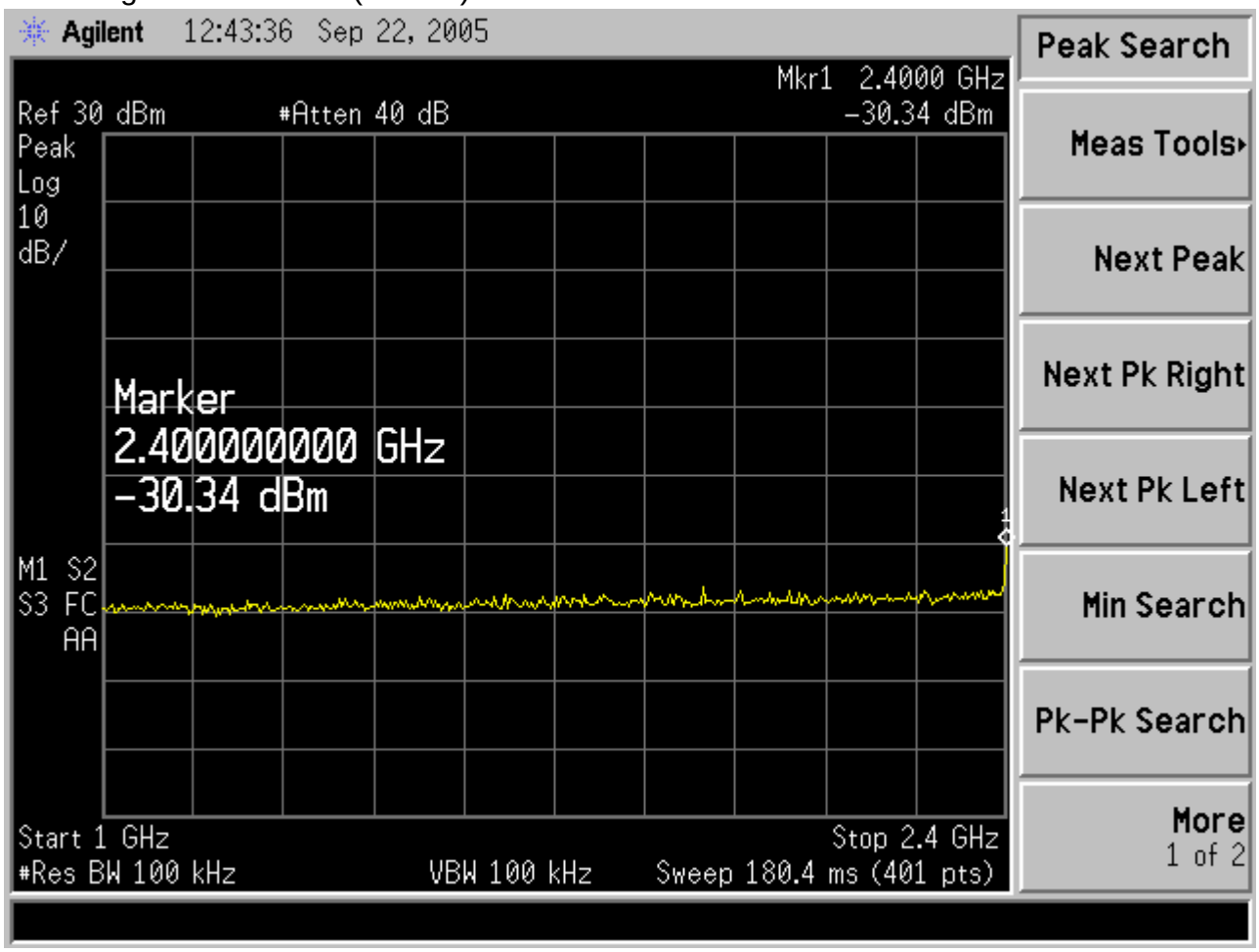

802.11g Channel 01 (3 of 5)

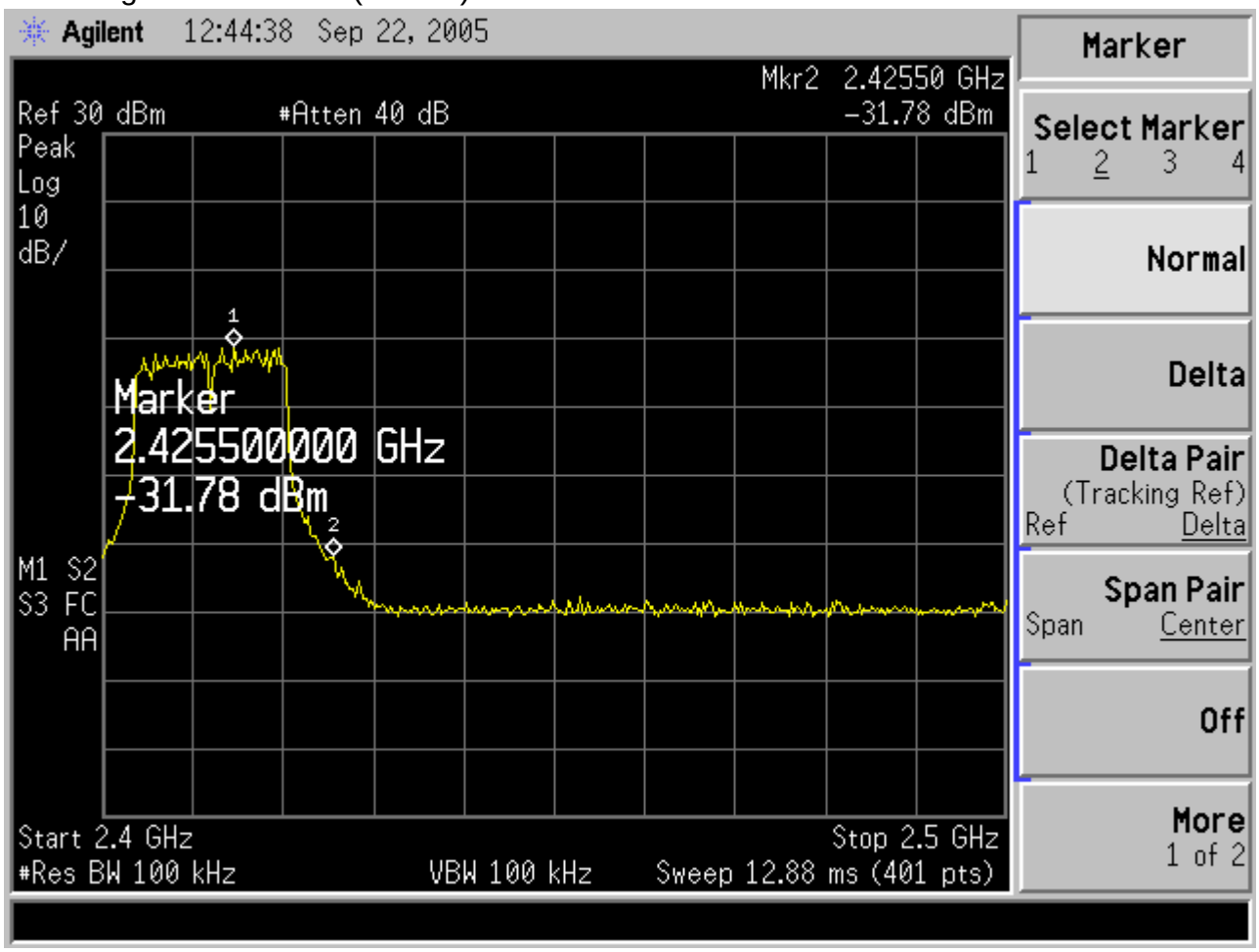

802.11g Channel 01 (4 of 5)

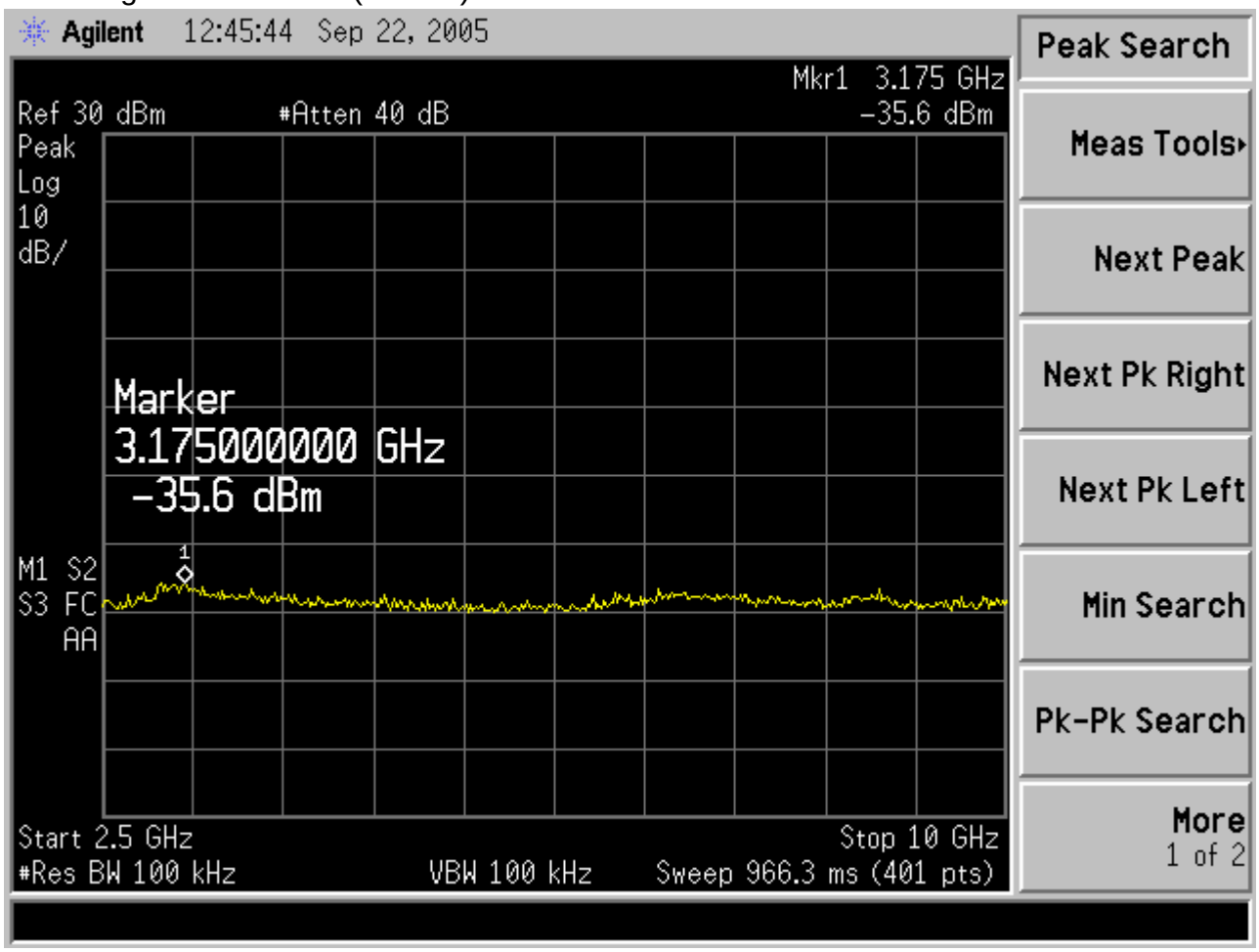

802.11g Channel 01 (5 of 5)

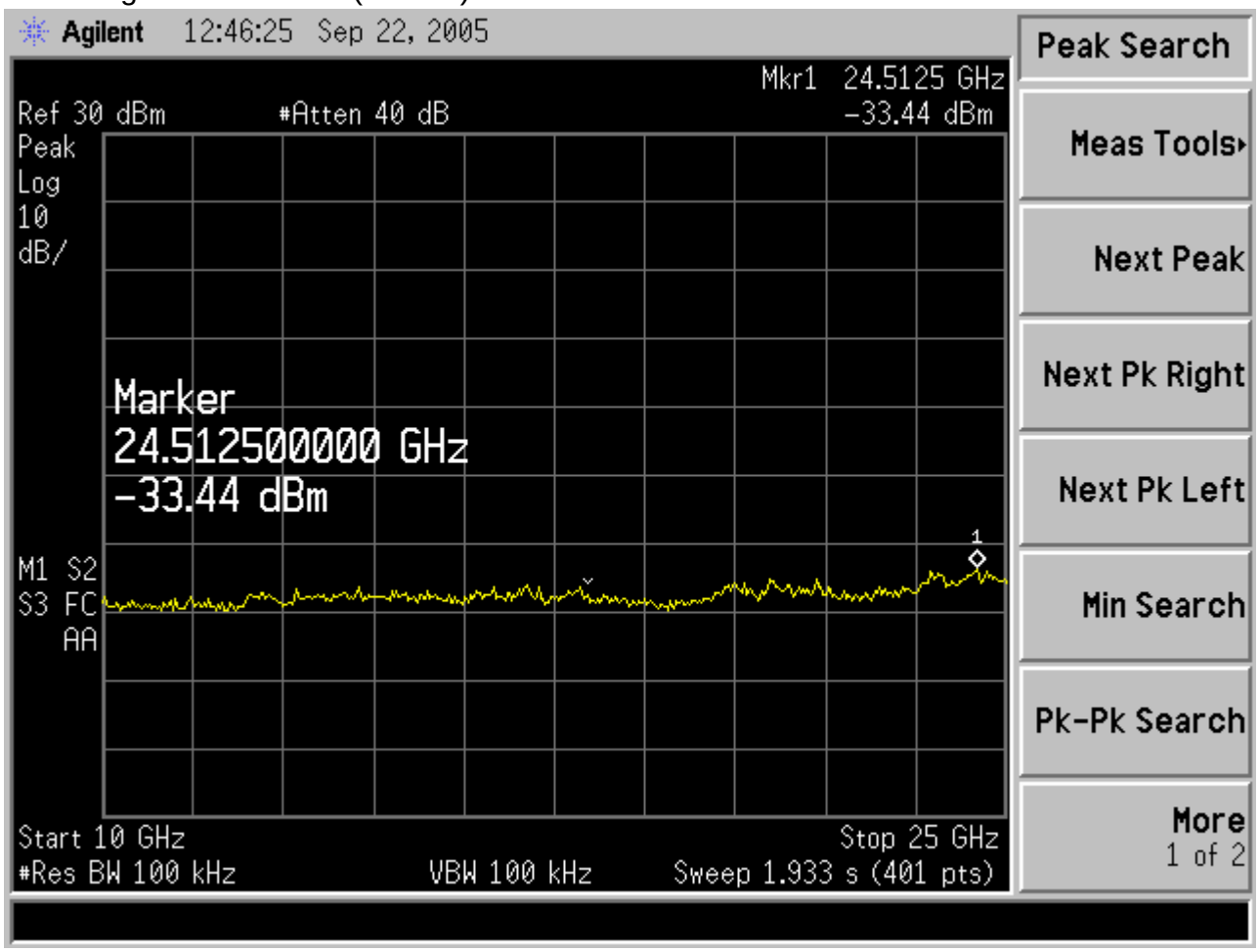

802.11g Channel 06 (1 of 5)

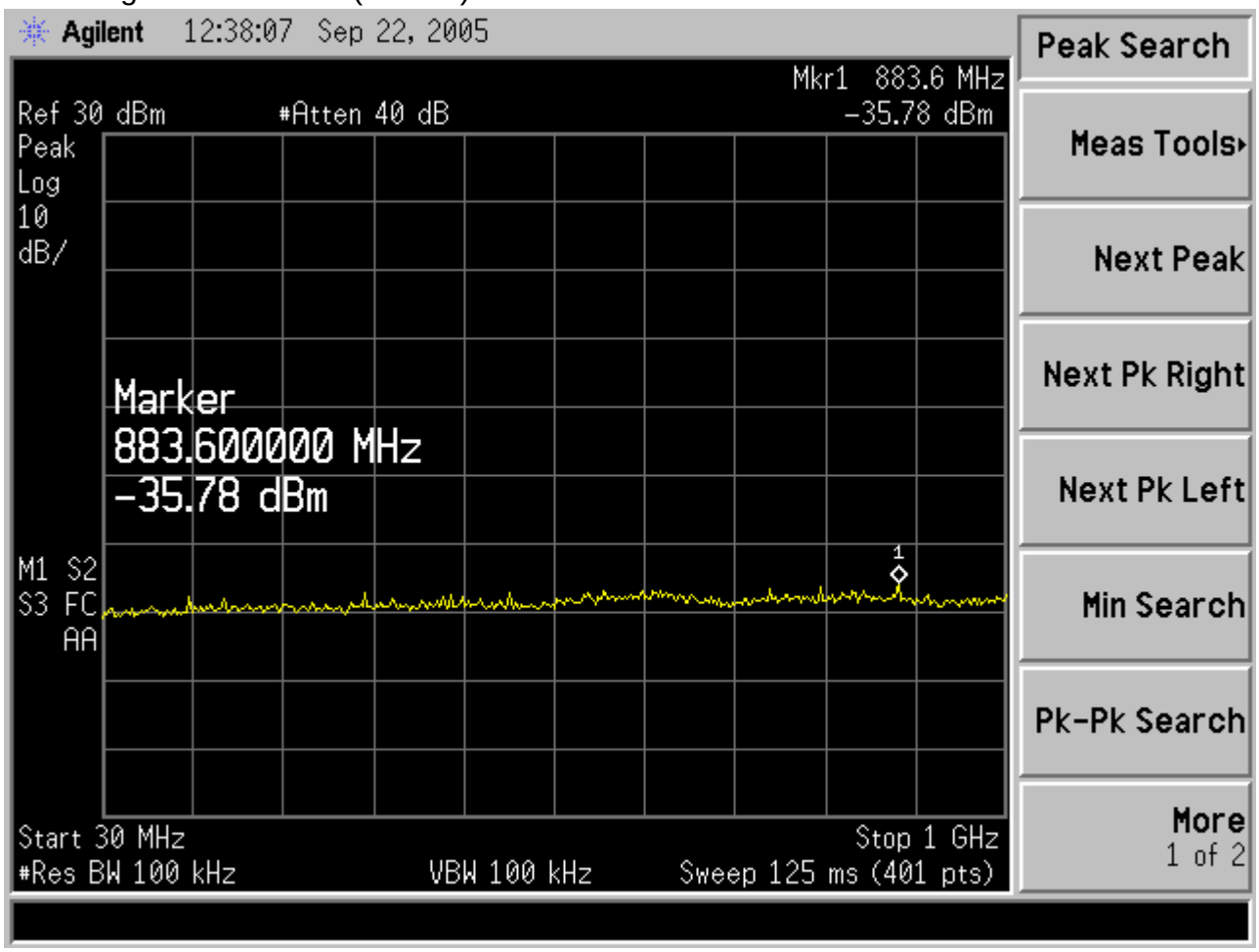

802.11g Channel 06 (2 of 5)

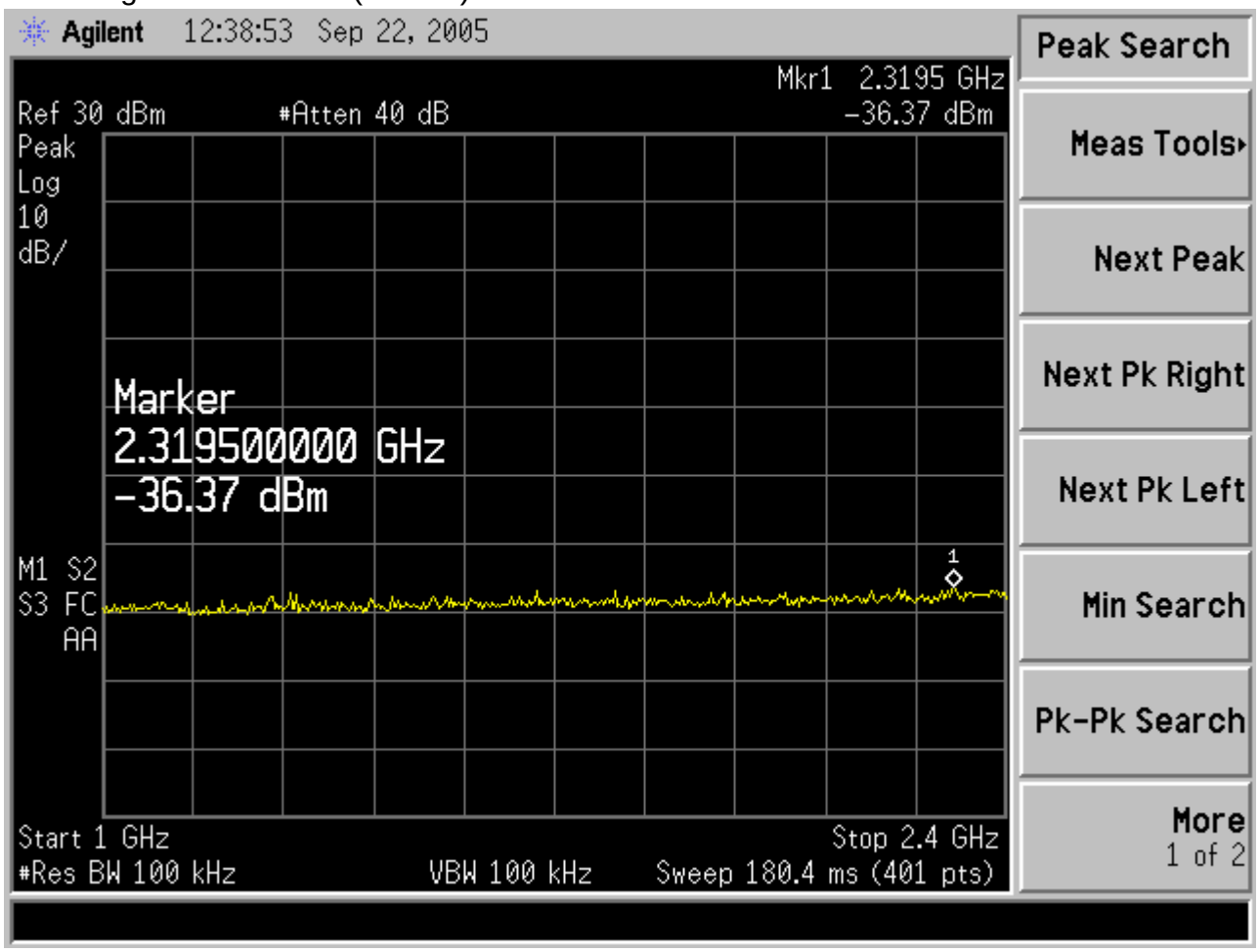

802.11g Channel 06 (3 of 5)

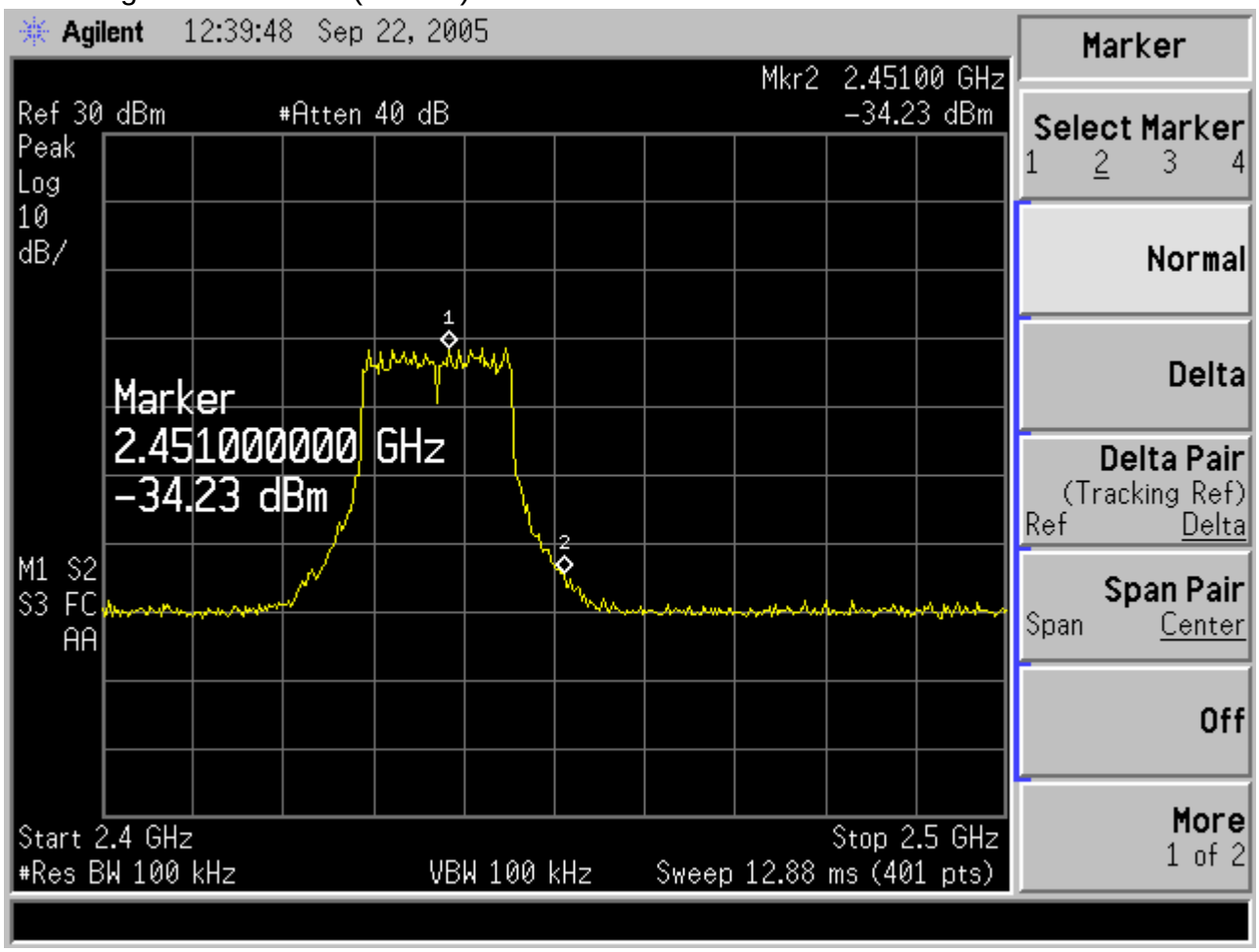

802.11g Channel 06 (4 of 5)

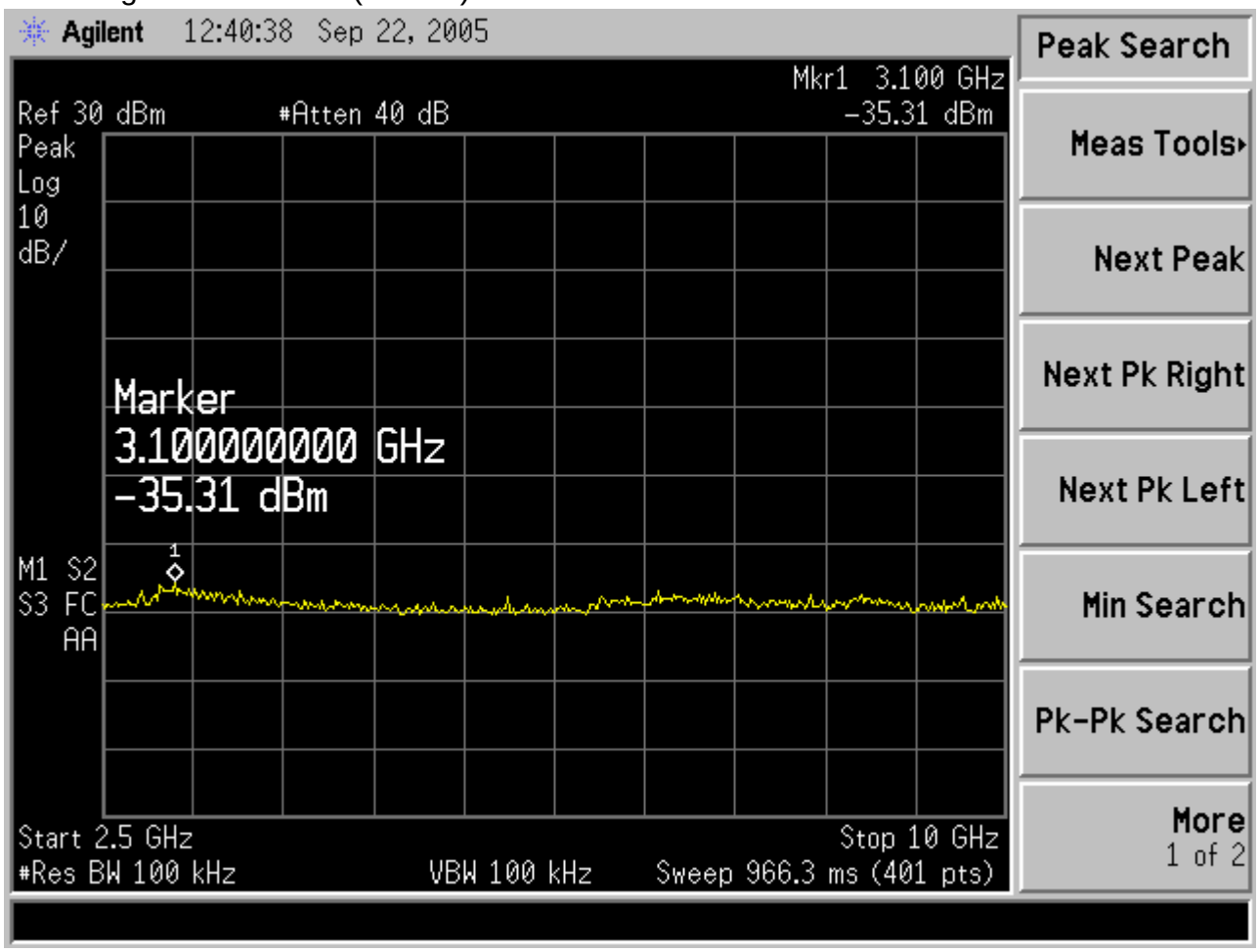

802.11g Channel 06 (5 of 5)

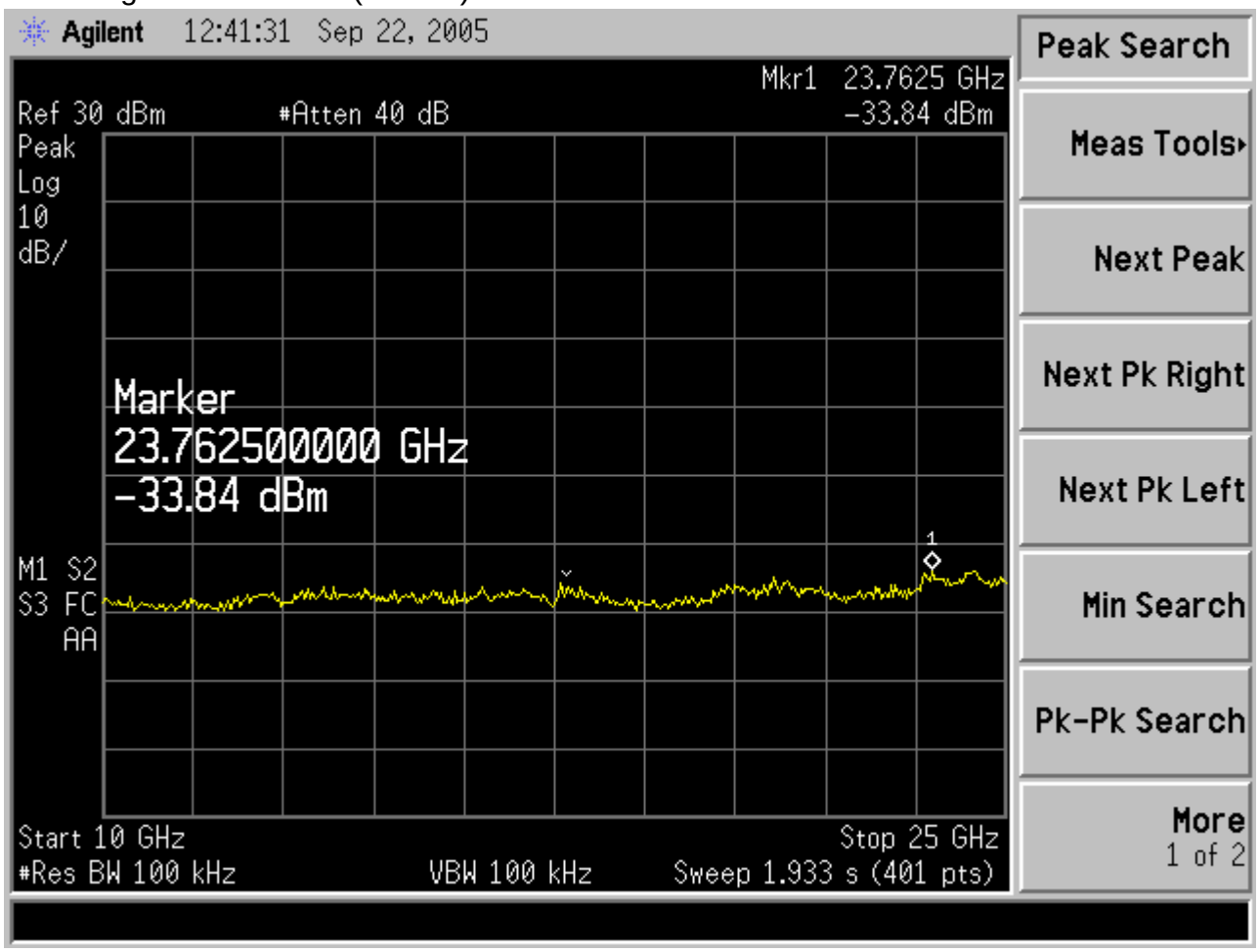

802.11g Channel 11 (1 of 5)

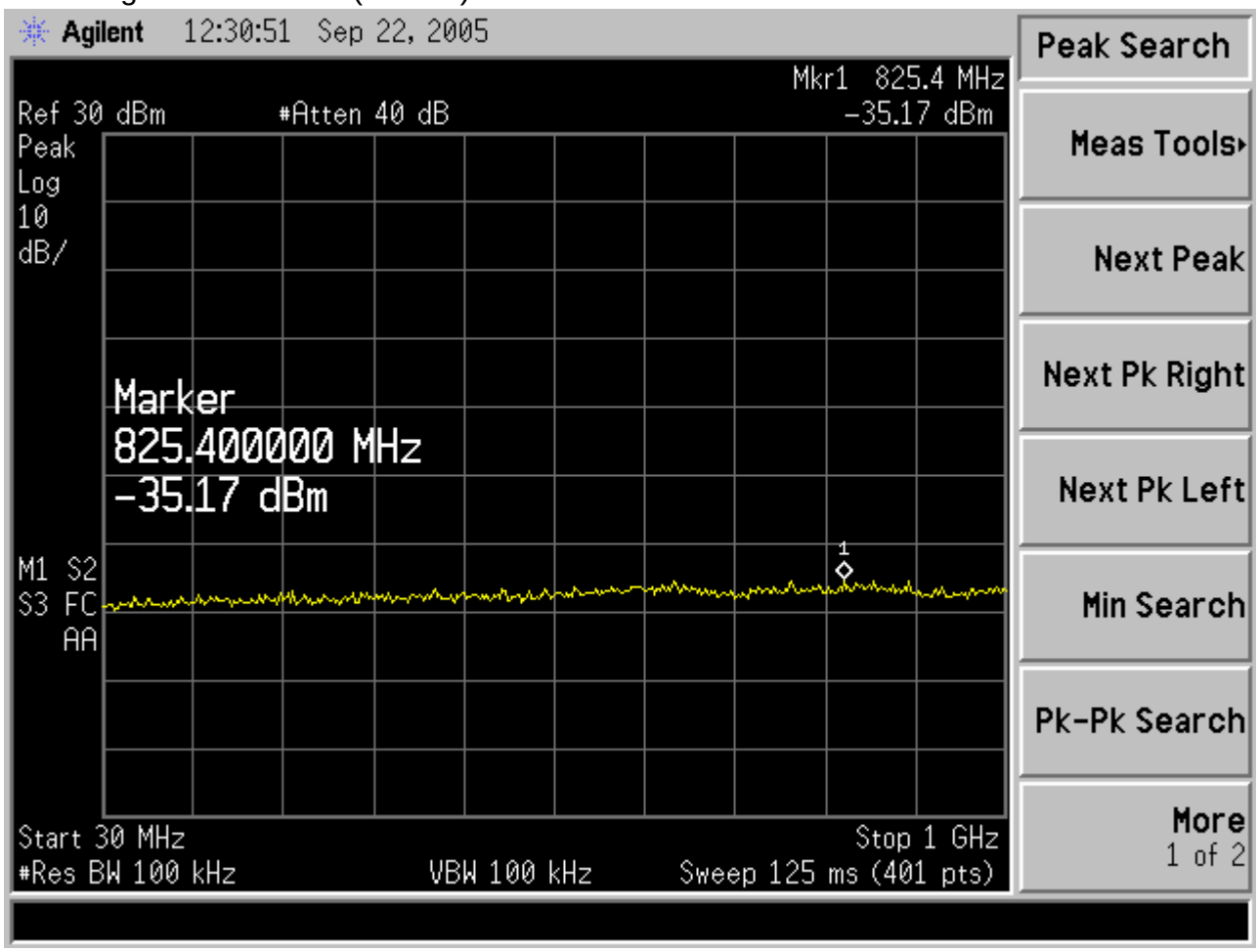

802.11g Channel 11 (2 of 5)

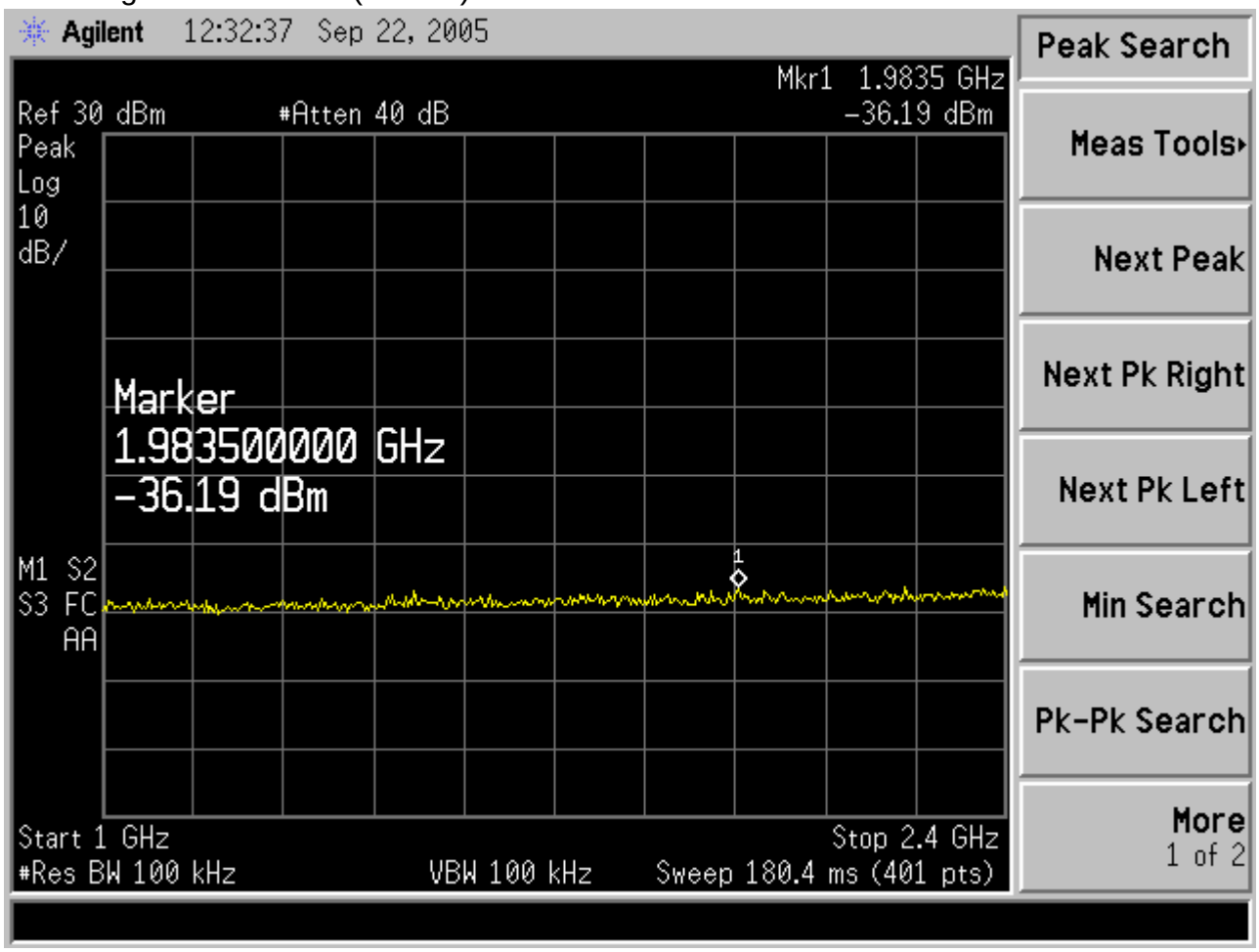

802.11g Channel 11 (3 of 5)

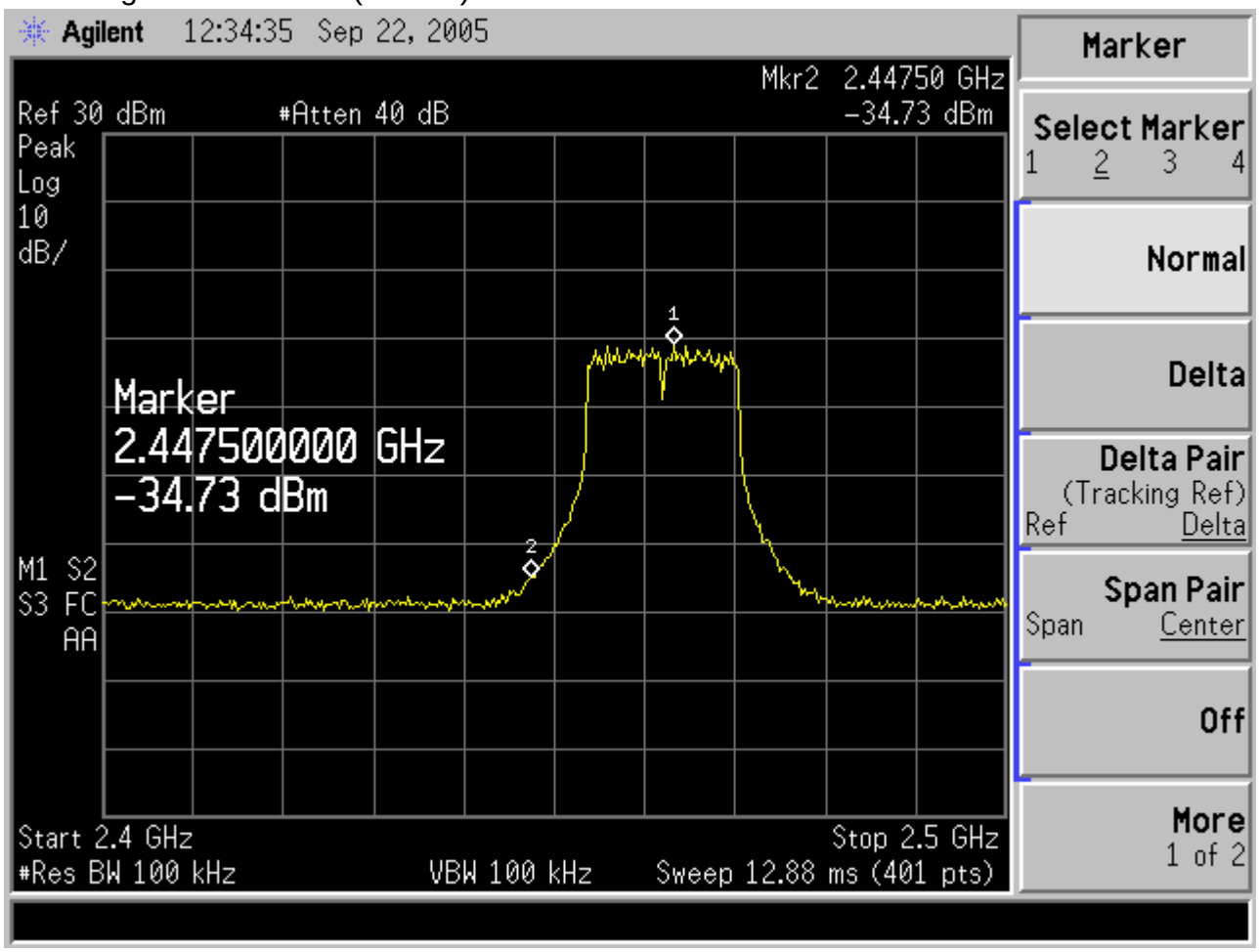

802.11g Channel 11 (4 of 5)

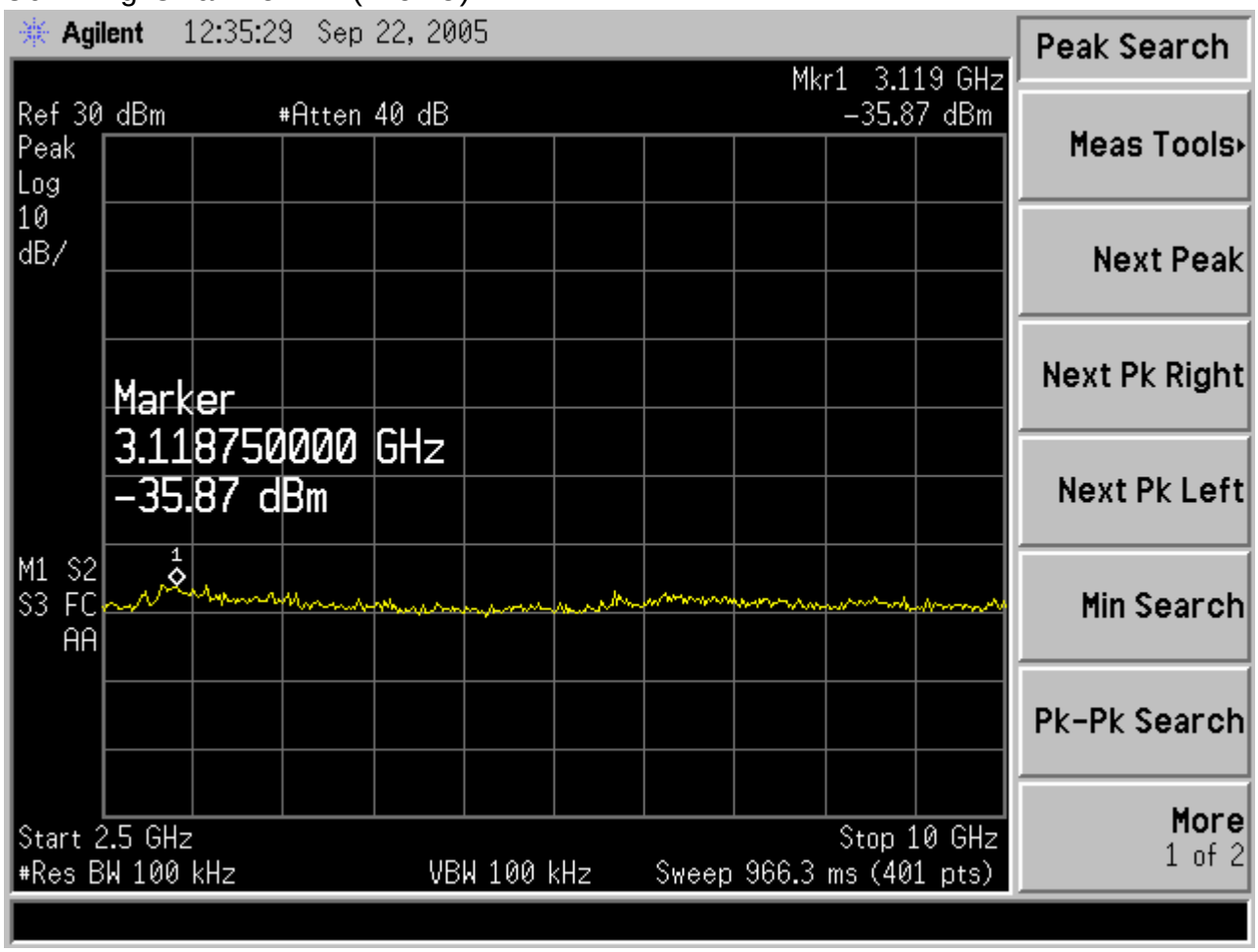

802.11g Channel 11 (5 of 5)

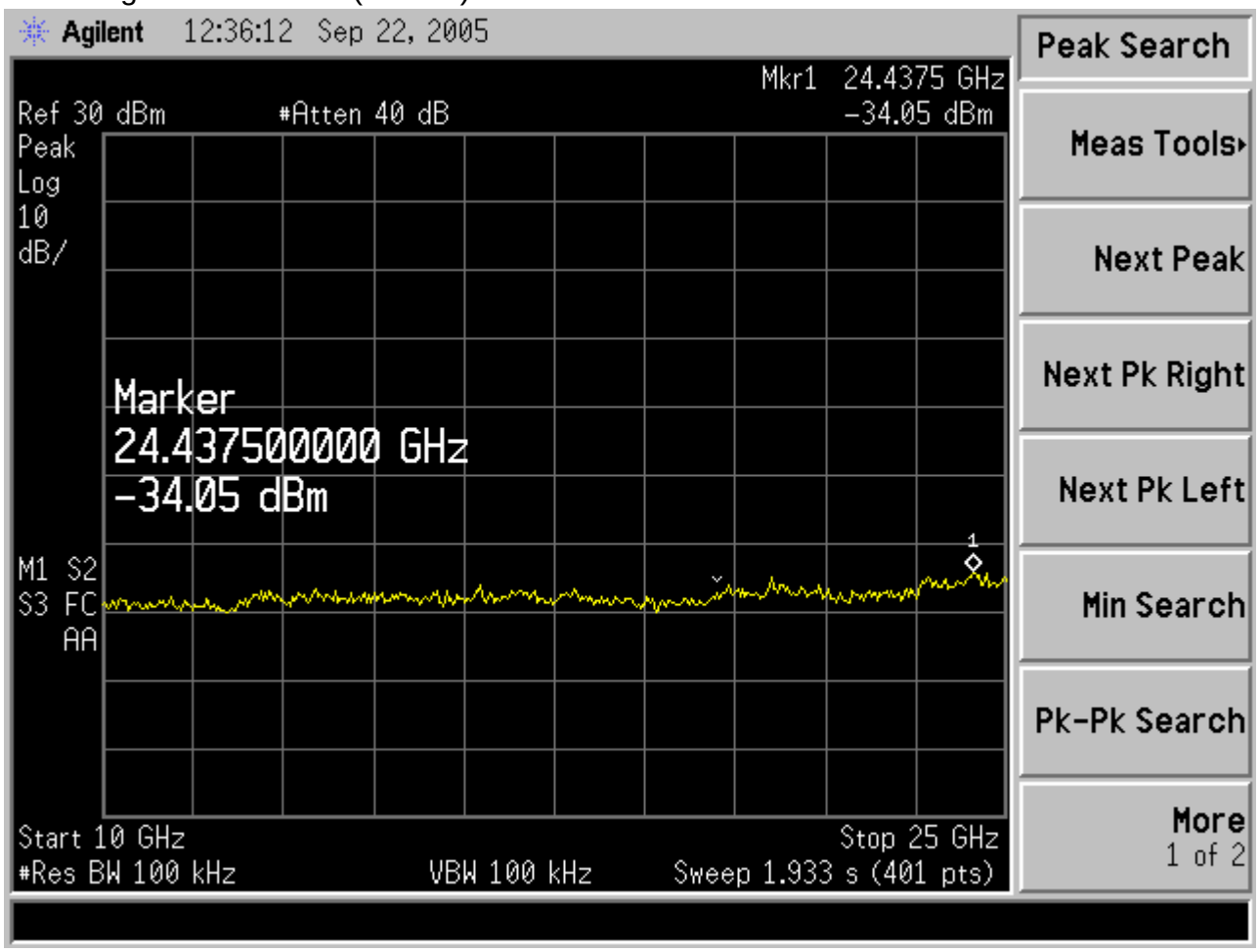

5. Band Edges Requirements

5.1 Test Condition & Setup :

The emissions on the harmonics frequencies, the limits, and the margin of compliance are presented. These tests were made when the transmitter was in full radiated power. The additional test was performed to show compliance with the requirement at the band-edge frequency 2483.5 MHz and up to 2500 MHz and at 2390.0 MHz.

The transmitter was configured with the worst case antenna and setup to transmit at the highest channel. Then the field strength was measured at 2483.5 MHz.

The transmitter was then configured with the worst case antenna and setup to transmit at the lowest channel. Then the field strength was measured at 2390.0 MHz. These tests were performed at 4 different bit rates.

5.2 Test Instruments Configuration:

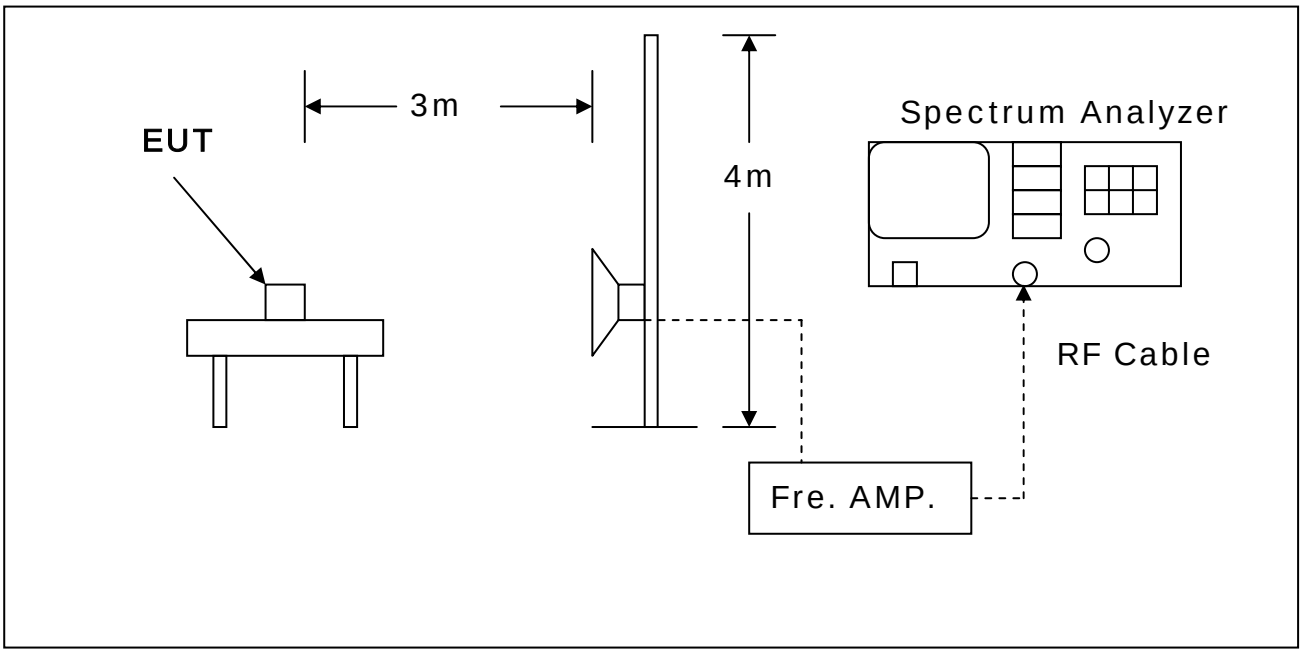

5.3 Test Equipment List:

A. Agilent E4407B 9KHz-26.5GHz Spectrum Analyzer (S/N:A872JS02291)
B. HP 8449B 1GHz-26.5GHz Pre Amplifier (S/N:1982901A91)
C. SCHWARZBECK BBHA 9120D Biconilog Antenna (S/N:141S3)

8.4 Test Result: (802.11b)

Radiated Emissions (HORIZONTAL) CH1								
Frequency (MHz)	Amplitude (dBuV/m)	Ant. (m)	Table (Degree)	Duty (dB)	Dist (dB)	Actual Amp (dBuV/m)	Limit (dBuV/m)	Margin (dB)
2389.86	52.07(PK)	1	280	0	9.54	42.53	74.00	-31.47
2389.86	48.33(AV)	1	280	0	9.54	38.79	54.00	-15.21
Radiated Emissions (VERTICAL) CH1								
Frequency (MHz)	Amplitude (dBuV/m)	Ant. (m)	Table (Degree)	Duty (dB)	Dist (dB)	Actual Amp (dBuV/m)	Limit (dBuV/m)	Margin (dB)
2389.90	55.13(PK)	1	240	0	9.54	45.59	74.00	-28.41
2389.90	51.34(AV)	1	240	0	9.54	41.80	54.00	-12.20

Radiated Emissions (HORIZONTAL) CH11								
Frequency (MHz)	Amplitude (dBuV/m)	Ant. (m)	Table (Degree)	Duty (dB)	Dist (dB)	Actual Amp (dBuV/m)	Limit (dBuV/m)	Margin (dB)
2483.57	56.34(PK)	1	270	0	9.54	46.80	74.00	-27.20
2483.57	50.10(AV)	1	270	0	9.54	40.56	54.00	-13.44
Radiated Emissions (VERTICAL) CH11								
Frequency (MHz)	Amplitude (dBuV/m)	Ant. (m)	Table (Degree)	Duty (dB)	Dist (dB)	Actual Amp (dBuV/m)	Limit (dBuV/m)	Margin (dB)
2483.55	56.88(PK)	1	300	0	9.54	47.34	74.00	-26.66
2483.55	52.04(AV)	1	300	0	9.54	42.50	54.00	-11.50

*Notes : 1.*Margin= Amplitude - Limits
*2.*Height of table for EUT placed: 0.8 Meter.
*3.*ANT= Antenna height.
*4.*Duty= Duty cycle correction factor.
*5.*Dis= Distance extrapolation factor.
*6.*Amplitude= Reading Amplitude – Amplifier gain+ Cable loss +Antenna factor (Auto calculate in spectrum analyzer)
*7.*Actual Amp= Amplitude – Duty – Dis.

5.5 Test Result: (802.11G)

Radiated Emissions (HORIZONTAL) CH1								
Frequency (MHz)	Amplitude (dBuV/m)	Ant. (m)	Table (Degree)	Duty (dB)	Dist (dB)	Actual Amp (dBuV/m)	Limit (dBuV/m)	Margin (dB)
2389.91	57.36(PK)	1	340	0	9.54	47.82	74.00	-26.18
2389.91	50.58(AV)	1	340	0	9.54	41.04	54.00	-12.96
Radiated Emissions (VERTICAL) CH1								
Frequency (MHz)	Amplitude (dBuV/m)	Ant. (m)	Table (Degree)	Duty (dB)	Dist (dB)	Actual Amp (dBuV/m)	Limit (dBuV/m)	Margin (dB)
2389.89	58.03(PK)	1	320	0	9.54	48.49	74.00	-25.51
2389.89	53.25(AV)	1	320	0	9.54	43.71	54.00	-10.29

Radiated Emissions (HORIZONTAL) CH11								
Frequency (MHz)	Amplitude (dBuV/m)	Ant. (m)	Table (Degree)	Duty (dB)	Dist (dB)	Actual Amp (dBuV/m)	Limit (dBuV/m)	Margin (dB)
2483.54	55.63(PK)	1	240	0	9.54	46.09	74.00	-27.91
2483.54	50.21(AV)	1	240	0	9.54	40.67	54.00	-13.33
Radiated Emissions (VERTICAL) CH11								
Frequency (MHz)	Amplitude (dBuV/m)	Ant. (m)	Table (Degree)	Duty (dB)	Dist (dB)	Actual Amp (dBuV/m)	Limit (dBuV/m)	Margin (dB)
2483.58	56.47(PK)	1	220	0	9.54	46.93	74.00	-27.07
2483.58	52.13(AV)	1	220	0	9.54	42.59	54.00	-11.41

Notes : *1.*Margin= Amplitude - Limits

*2.*Height of table for EUT placed: 0.8 Meter.

*3.*ANT= Antenna height.

*4.*Duty= Duty cycle correction factor.

*5.*Dis= Distance extrapolation factor.

*6.*Amplitude= Reading Amplitude – Amplifier gain+ Cable loss +Antenna factor (Auto calculate in spectrum analyzer)

*7.*Actual Amp= Amplitude – Duty – Dis.

V. 802.11a 5150MHz – 5350MHz

1. Emission bandwidth Requirements

1.1 Test Limit & Setup :

15.403 (c) Emission bandwidth. For purposes of this subpart the emission bandwidth shall be determined by measuring the width of the signal between two points, one below the carrier center frequency and one above the carrier center frequency, that are 26 dB down relative to the maximum level of the modulated carrier. Determination of the emissions bandwidth is based on the use of measurement instrumentation employing a peak detector function with an instrument resolutions bandwidth approximately equal to 1.0 percent of the emission bandwidth of the device under measurement.

1.2 Test Instruments Configuration:

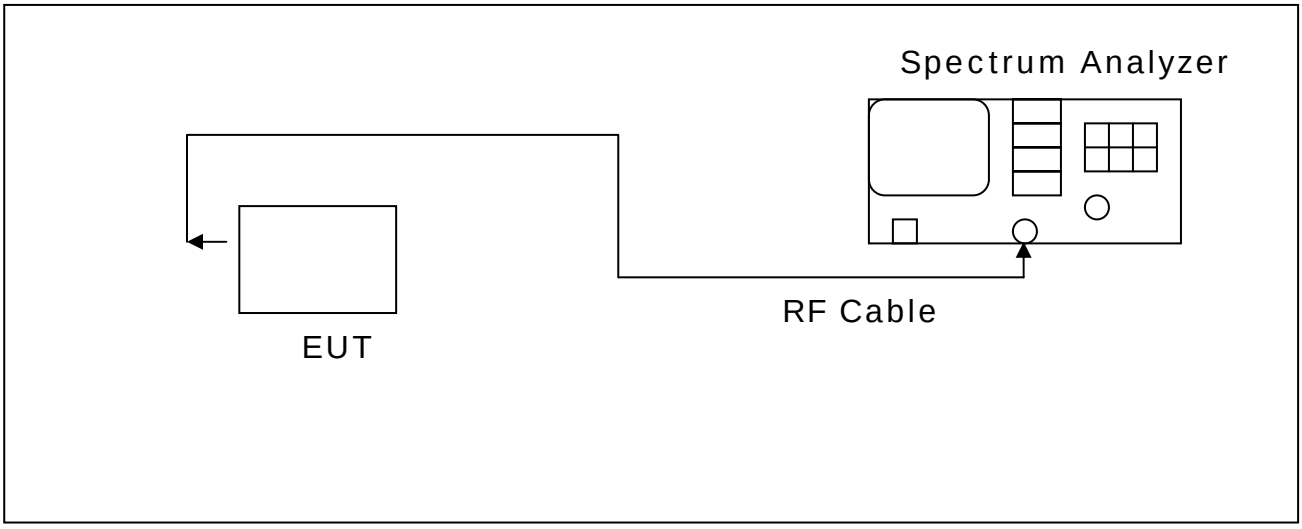

1.3 Test Equipment List:

Agilent E4407B 9KHz-26.5GHz Spectrum Analyzer (S/N:A872JS02291)

1.4 Test Result:

Frequency (MHz)	26dBc Occupied Bandwidth (MHz)	10 log B (dB)
5180	28.5	14.55
5240	27.6	14.41
5260	28.2	14.50
5320	26.6	14.25

802.11a (5180MHz)

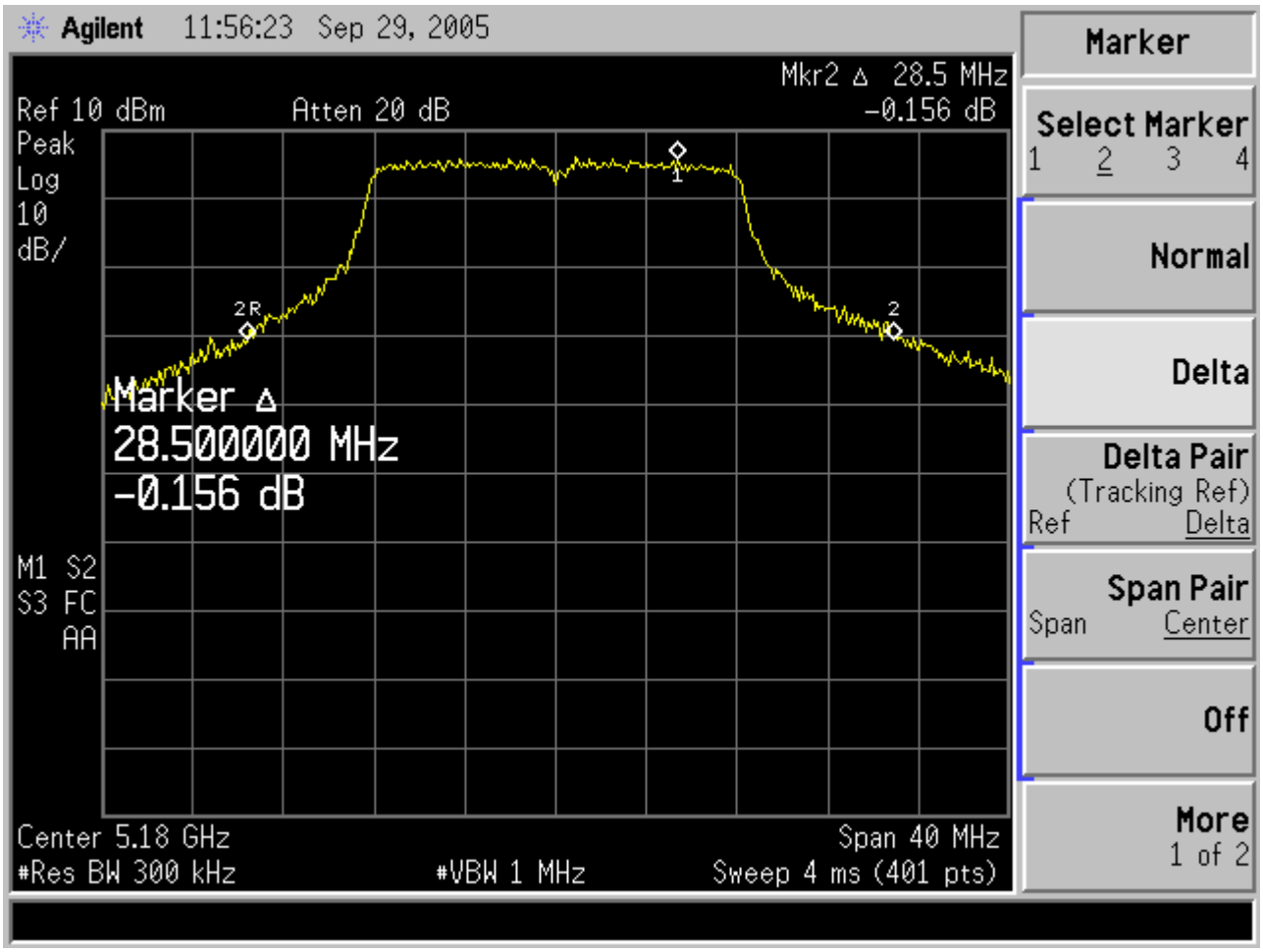

802.11a (5240MHz)

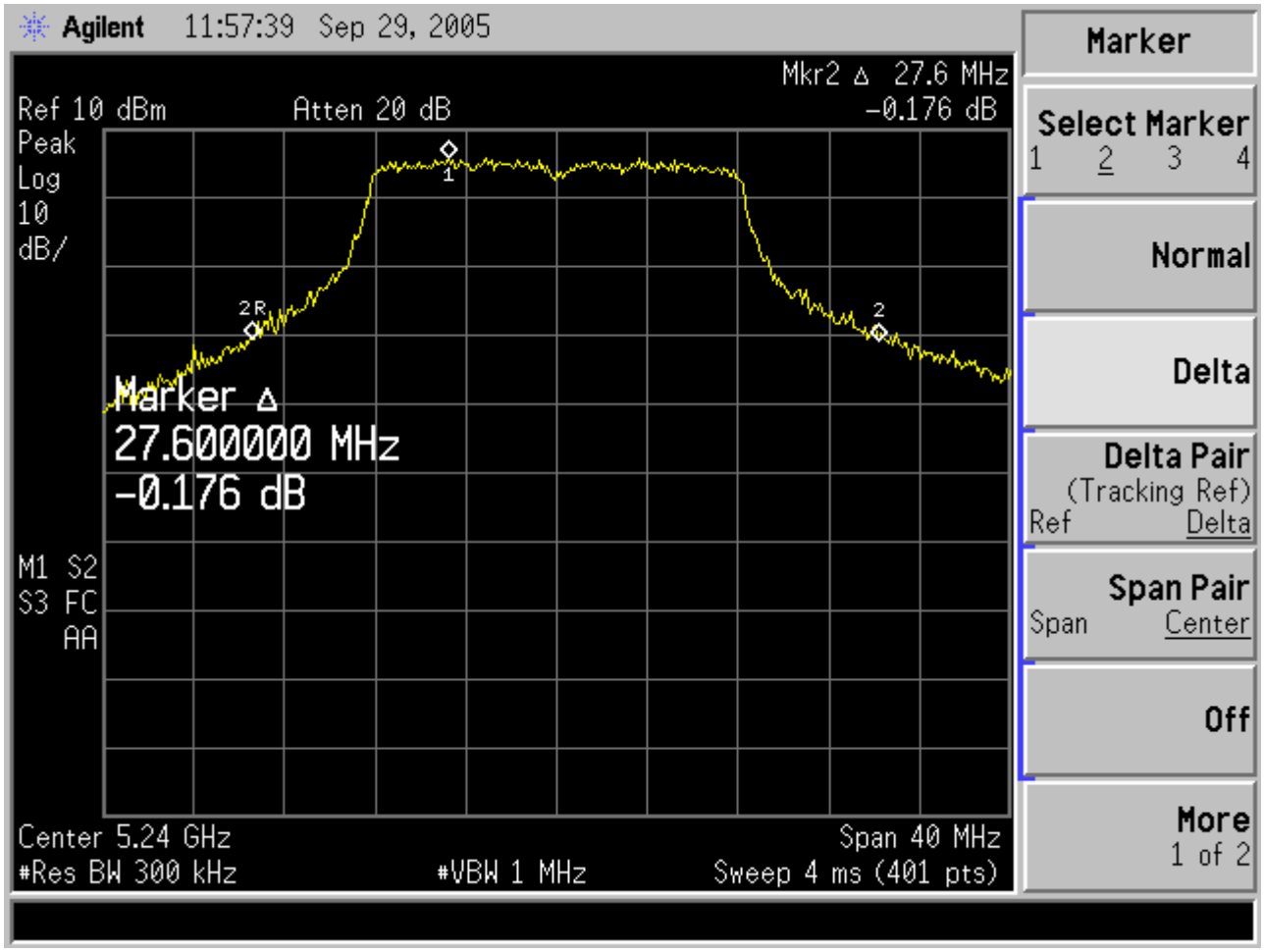

802.11a (5260MHz

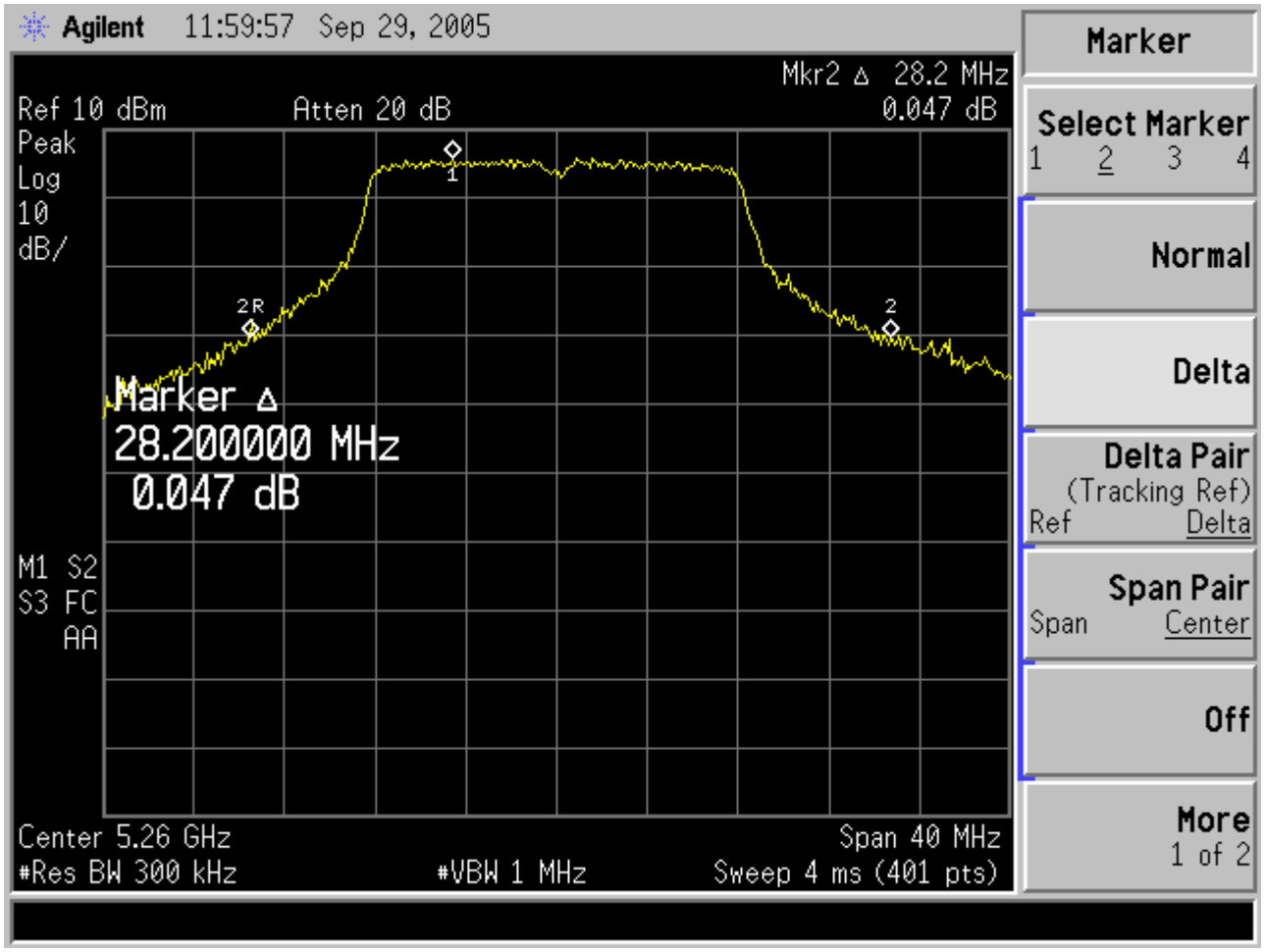

802.11a (5320MHz)

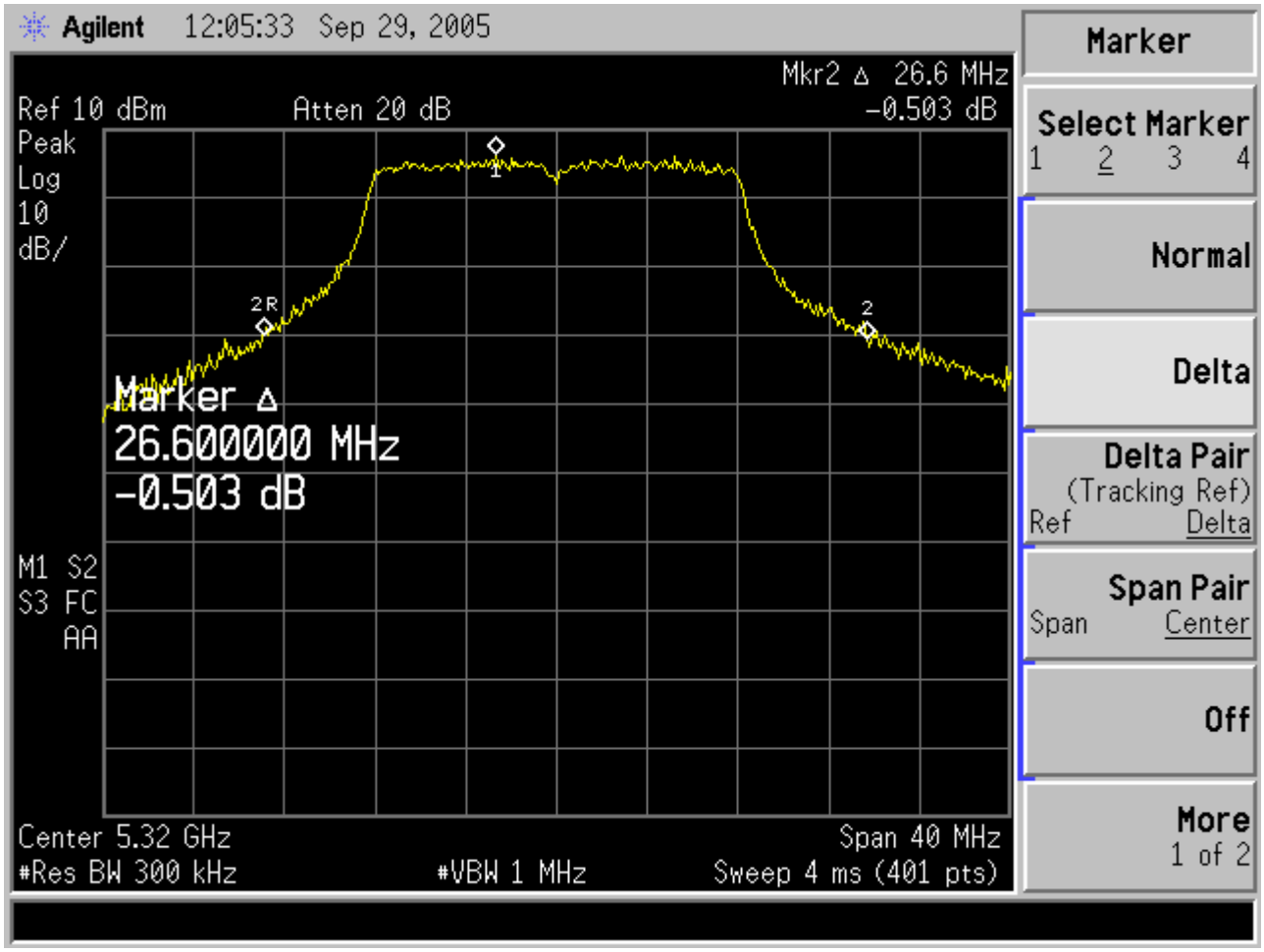

2. Peak Transmit Power Requirements

2.1 Test Limit & Setup :

15.407(a) (1) For the band 5.15-5.25 GHz, the peak transmit power over the frequency band of operation shall not exceed the lesser of 50 mW (17dBm) or 4 dBm + 10log B, where B is the 26-dB emission bandwidth in MHz. In addition, the peak power spectral density shall not exceed 4 dBm in any 1-MHz band. If transmitting antennas of directional gain greater than 6 dBi are used, both the peak transmit power and the peak power spectral density shall be reduced by the amount in dB that the directional gain of the antenna exceeds 6 dBi.

15.407(a) (2) For the band 5.25-5.35 GHz, the peak transmit power over the frequency band of operation shall not exceed the lesser of 250 mW (24dBm) or 11 dBm + 10log B, where B is the 26-dB emission bandwidth in MHz. In addition, the peak power spectral density shall not exceed 11 dBm in any 1-MHz band. If transmitting antennas of directional gain greater than 6 dBi are used, both the peak transmit power and the peak power spectral density shall be reduced by the amount in dB that the directional gain of the antenna exceeds 6 dBi.

2.2 Test Instruments Configuration:

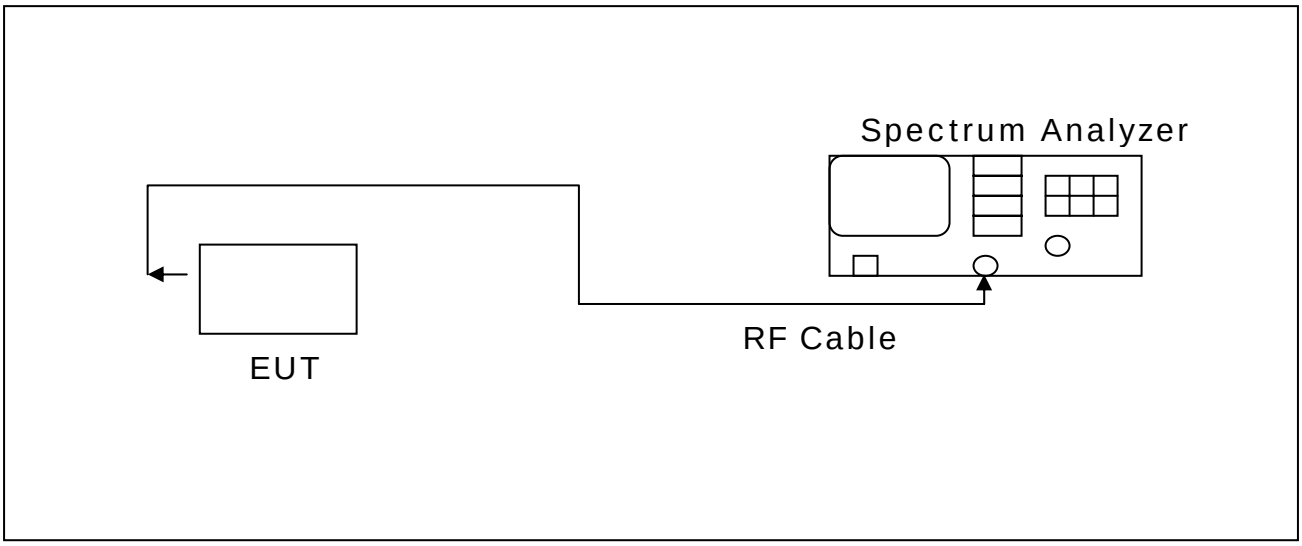

2.3 Test Equipment List:

Agilent E4407B 9KHz-26.5GHz Spectrum Analyzer (S/N:A872JS02291)

Limit in 5150MHz – 5250MHz Band

Frequency (MHz)	26dBc Occupied Bandwidth (MHz)	4 + 10 log B (dBm)	Antenna Gain (dBm)	Limit (dBm)
5180	28.5	18.55	2.0	17
5240	27.6	18.41	2.0	17

Limit in 5250MHz – 5350MHz Band

Frequency (MHz)	26dBc Occupied Bandwidth (MHz)	4 + 10 log B (dBm)	Antenna Gain (dBi)	Limit (dBm)
5260	28.2	25.50	2.0	24
5320	26.6	25.25	2.0	24

2.4 Test Result:

Frequency (MHz)	Output(dBm)	Required Limit
5180	13.95	17.0dBm
5240	14.26	17.0dBm
5260	13.92	24.0dBm
5320	13.12	24.0dBm

Note :Test Graphs See next page.

802.11a (5180MHz)

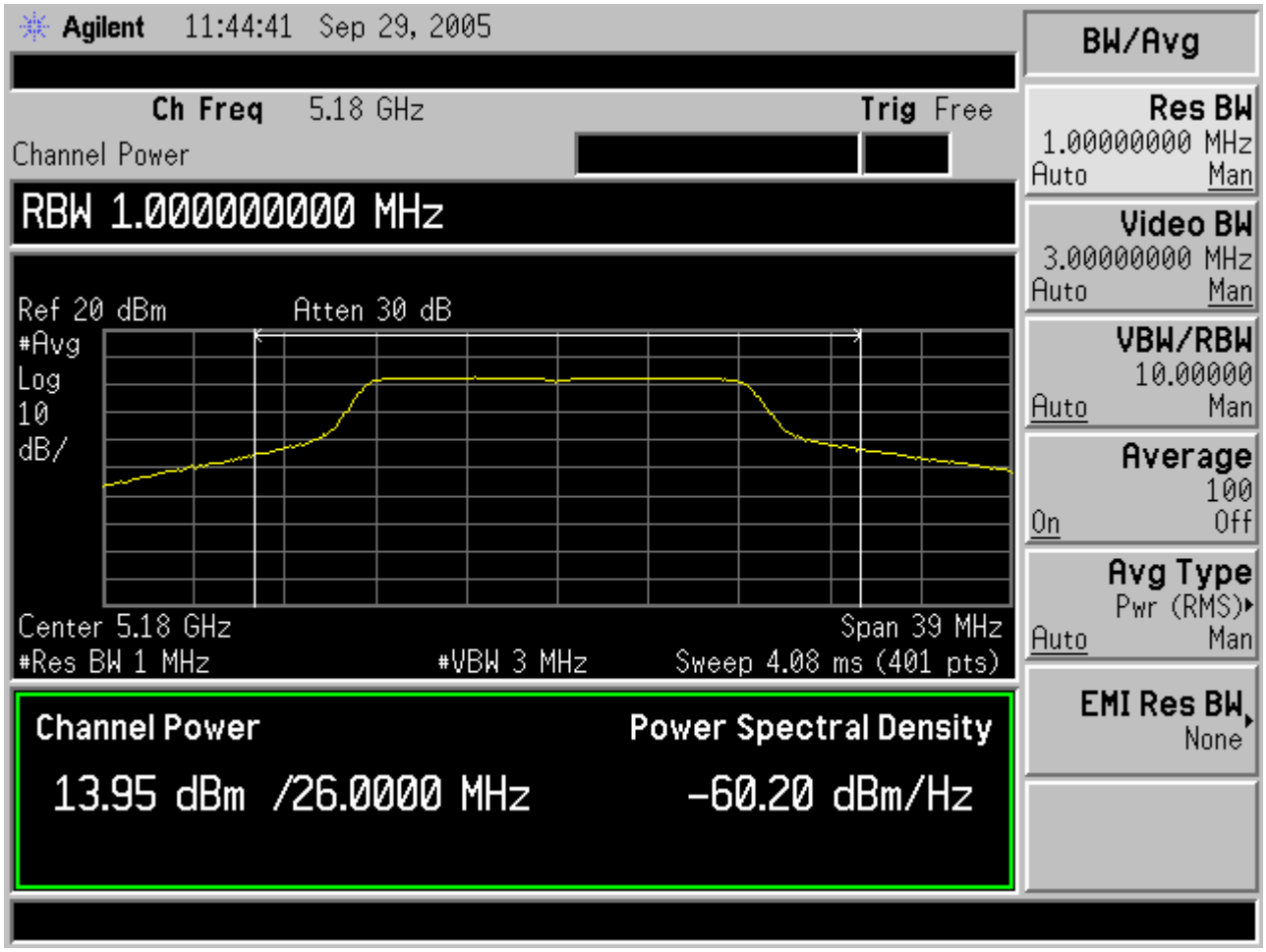

802.11a (5240MHz)

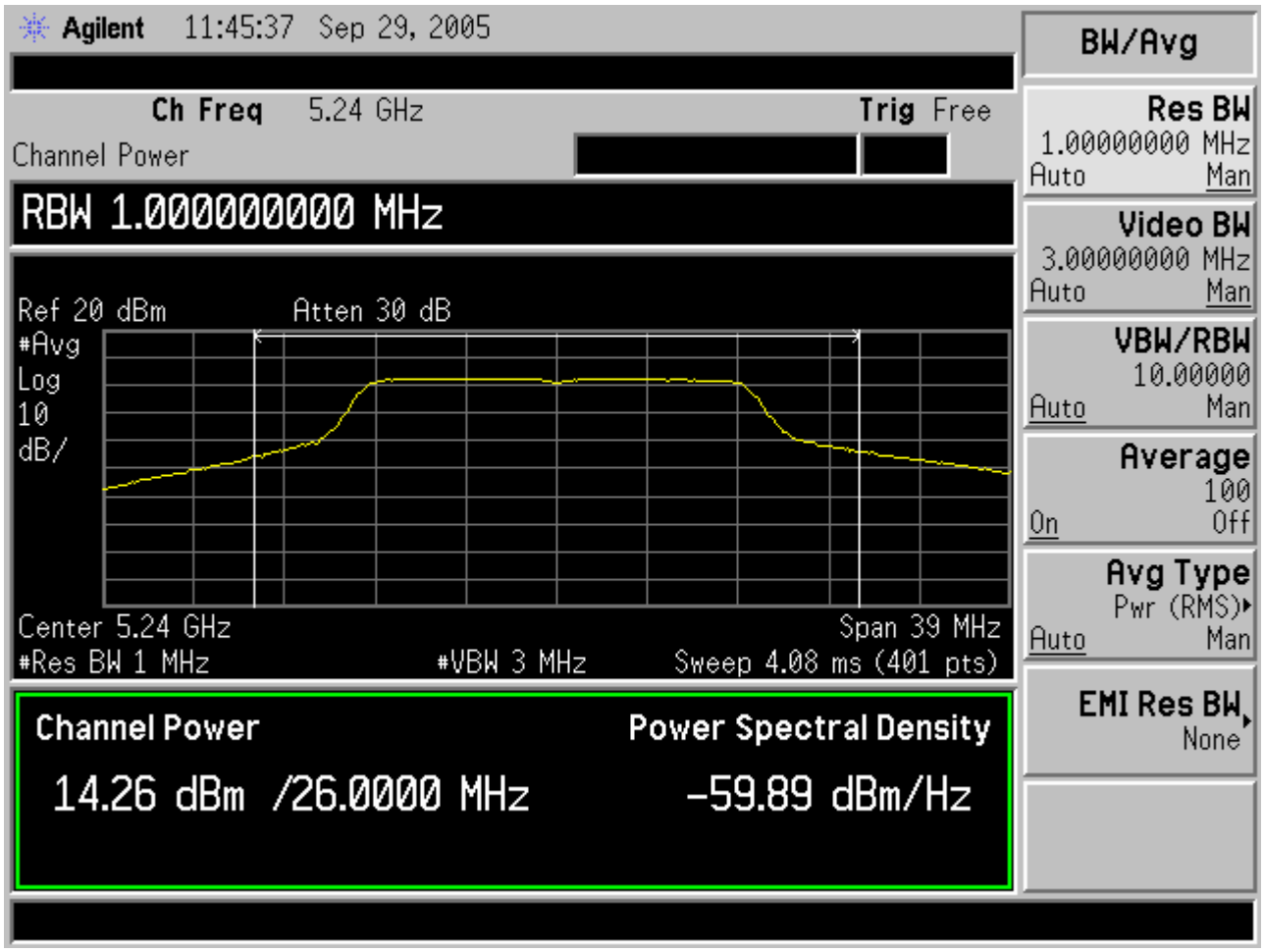

802.11a (5260MHz)

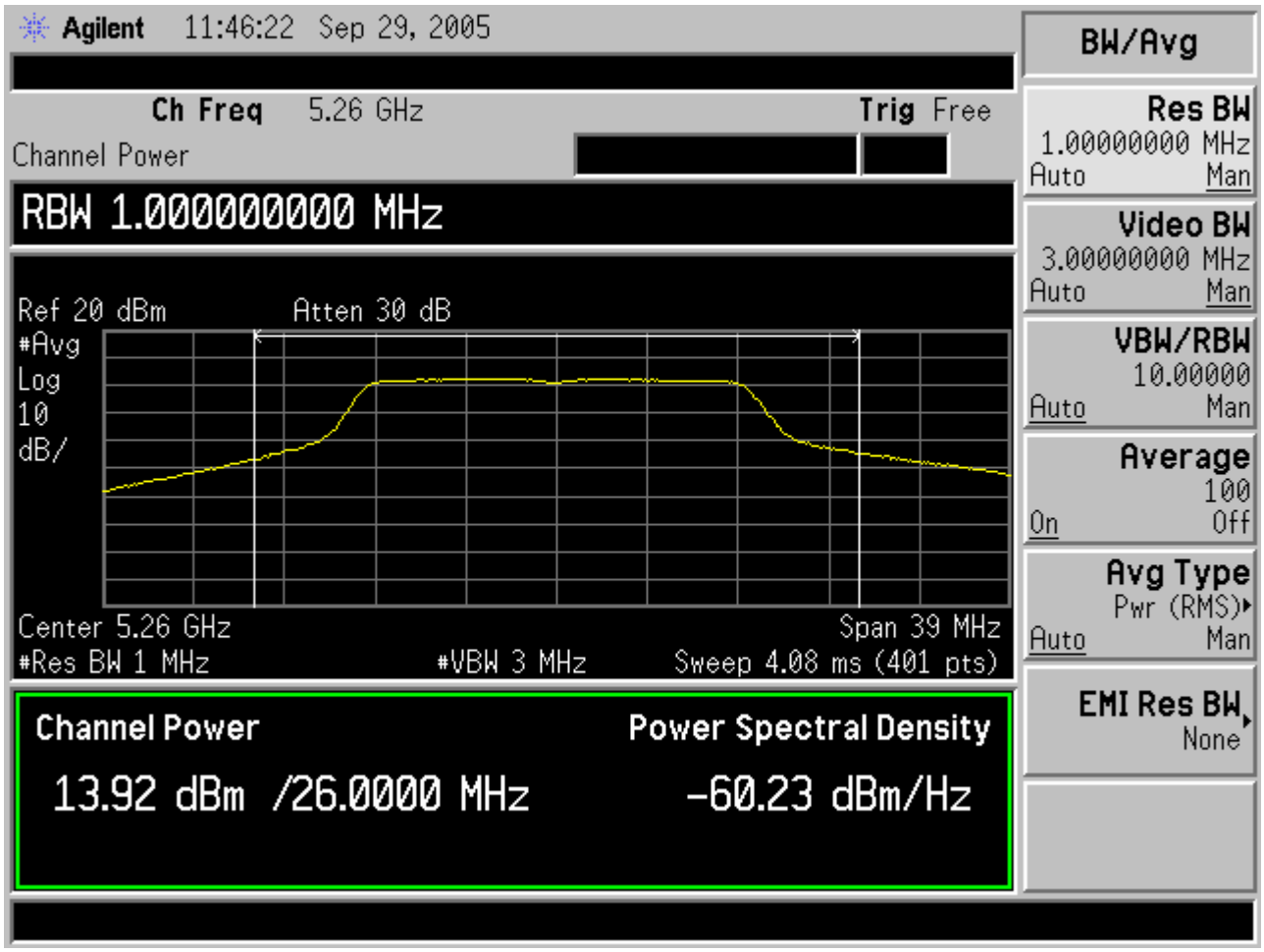

802.11a (5320MHz)

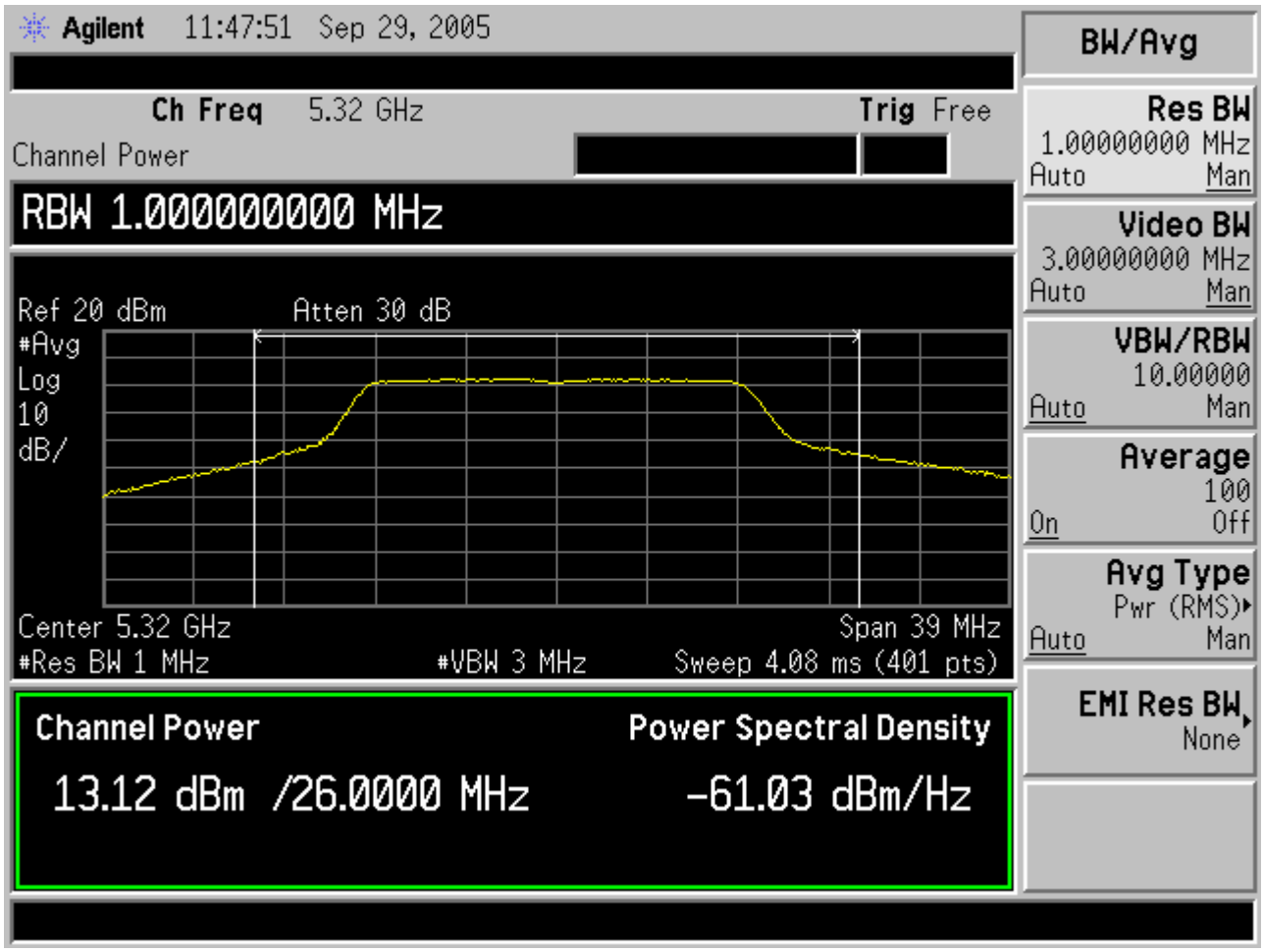

3. Peak Power Spectral Density Requirements

3.1 Test Limit & Setup :

Frequency Band (MHz)	Required Limit
5150 - 5250	4dBm
5250 - 5350	11dBm
5725 - 5825	17dBm

3.2 Test Instruments Configuration:

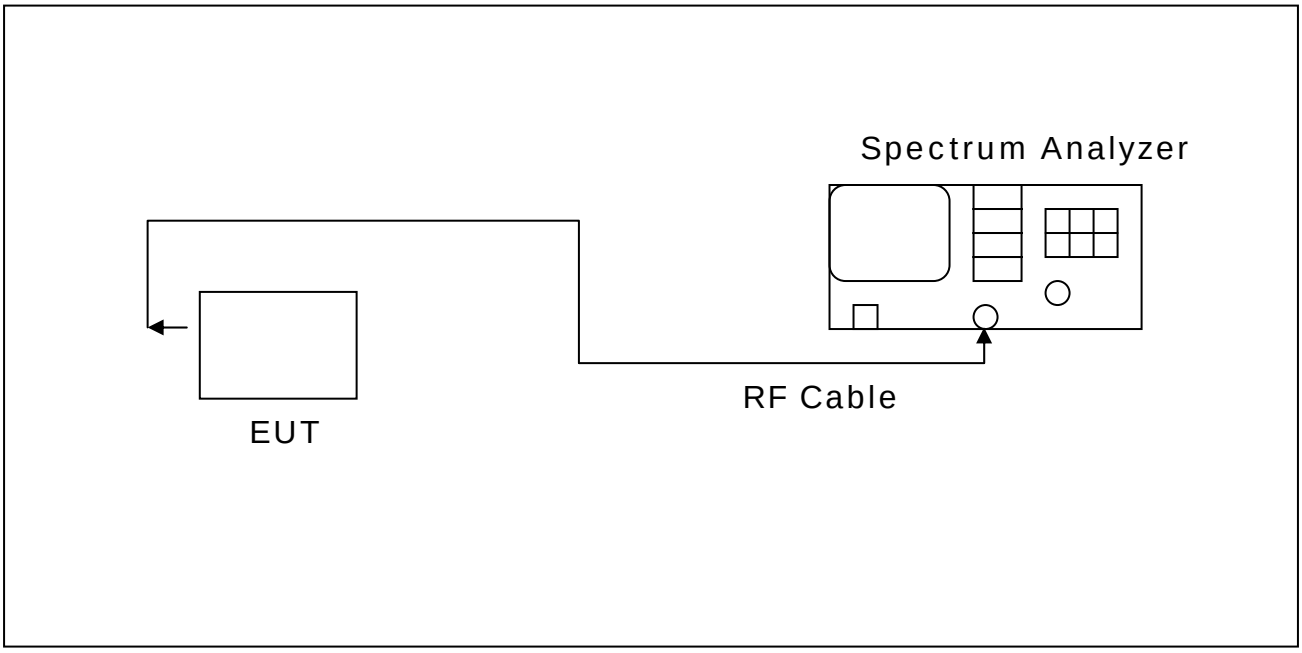

3.3 Test Equipment List:

Agilent E4407B 9KHz-26.5GHz Spectrum Analyzer (S/N:A872JS02291)

3.4 Test Result:

Frequency (MHz)	RF Power Level in 1MHz RBW (dBm)	Required Limit
5180	1.732	≦4dBm
5240	1.583	≦4dBm
5260	1.385	≦11dBm
5320	0.959	≦11dBm

802.11a (5180MHz)

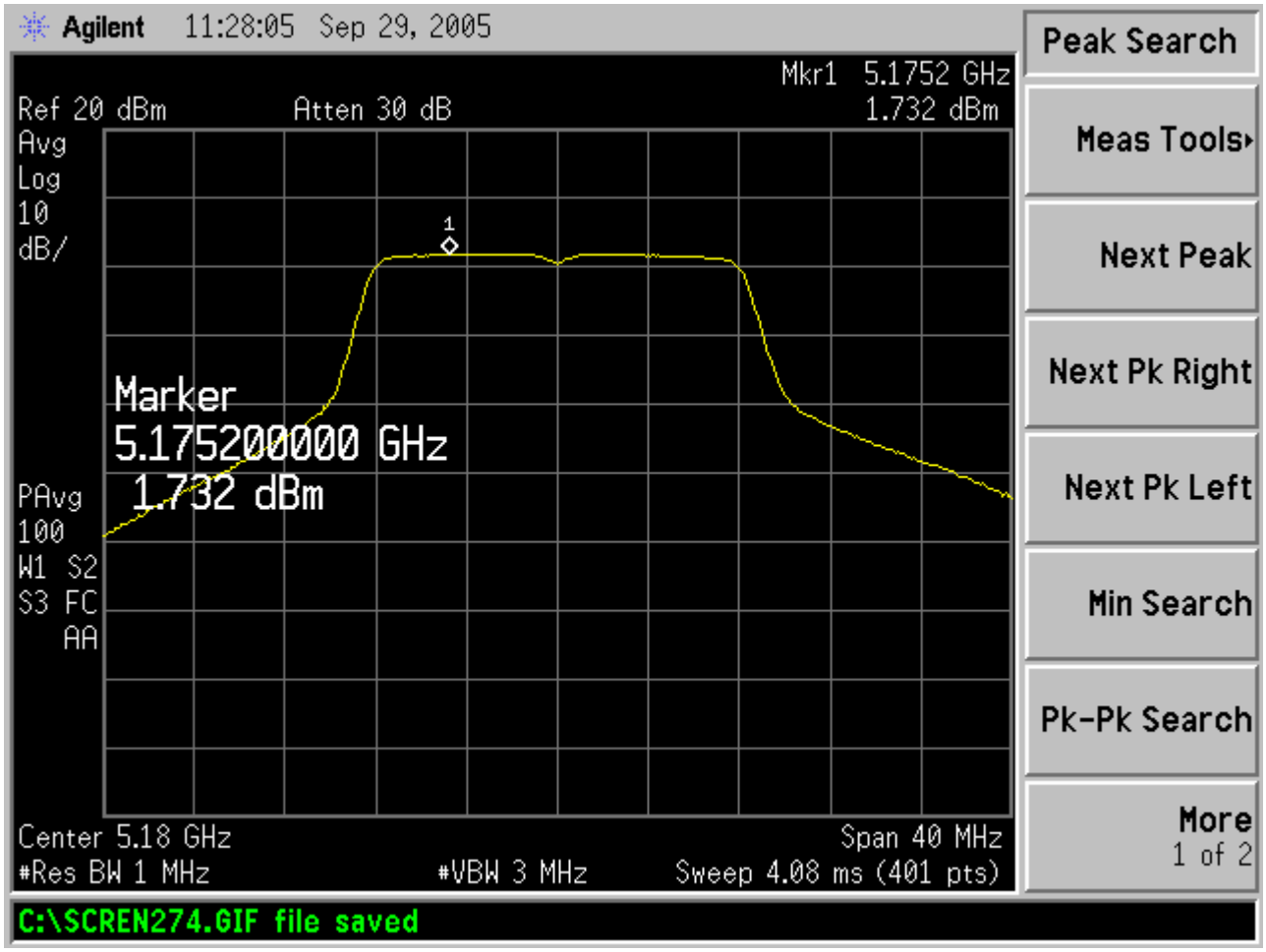

802.11a (5240MHz)

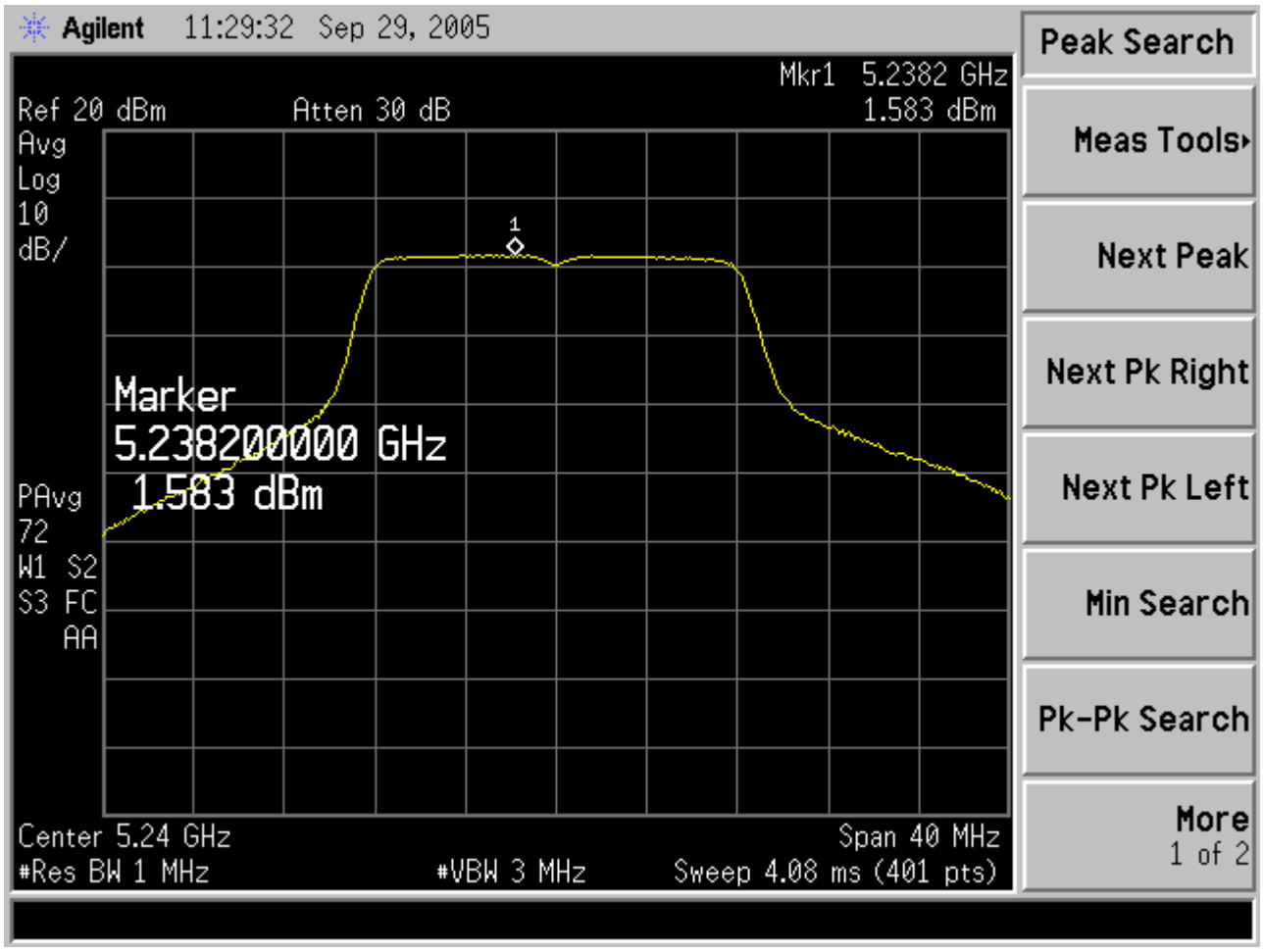

802.11a (5260MHz)

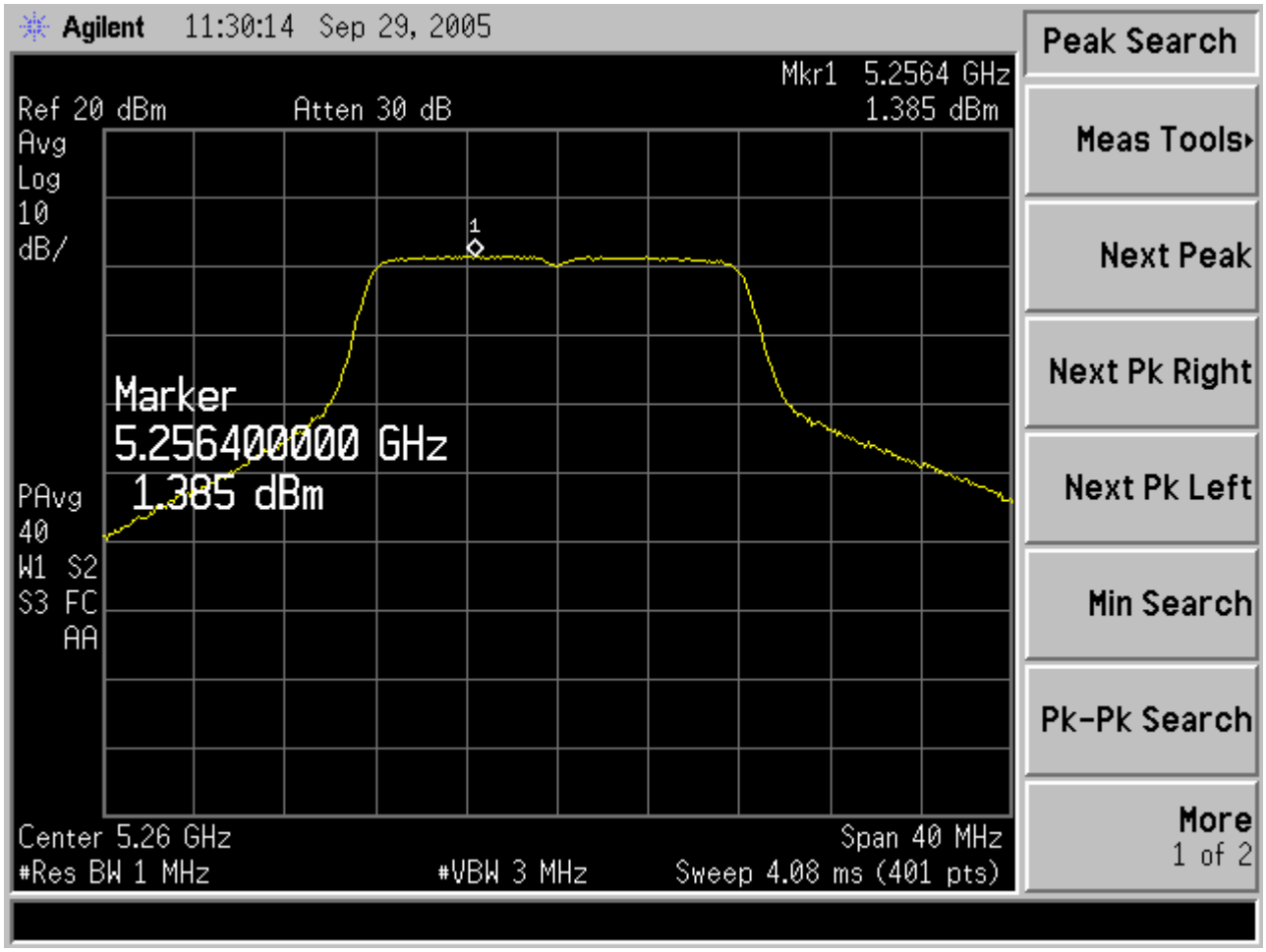

802.11a (5320MHz)

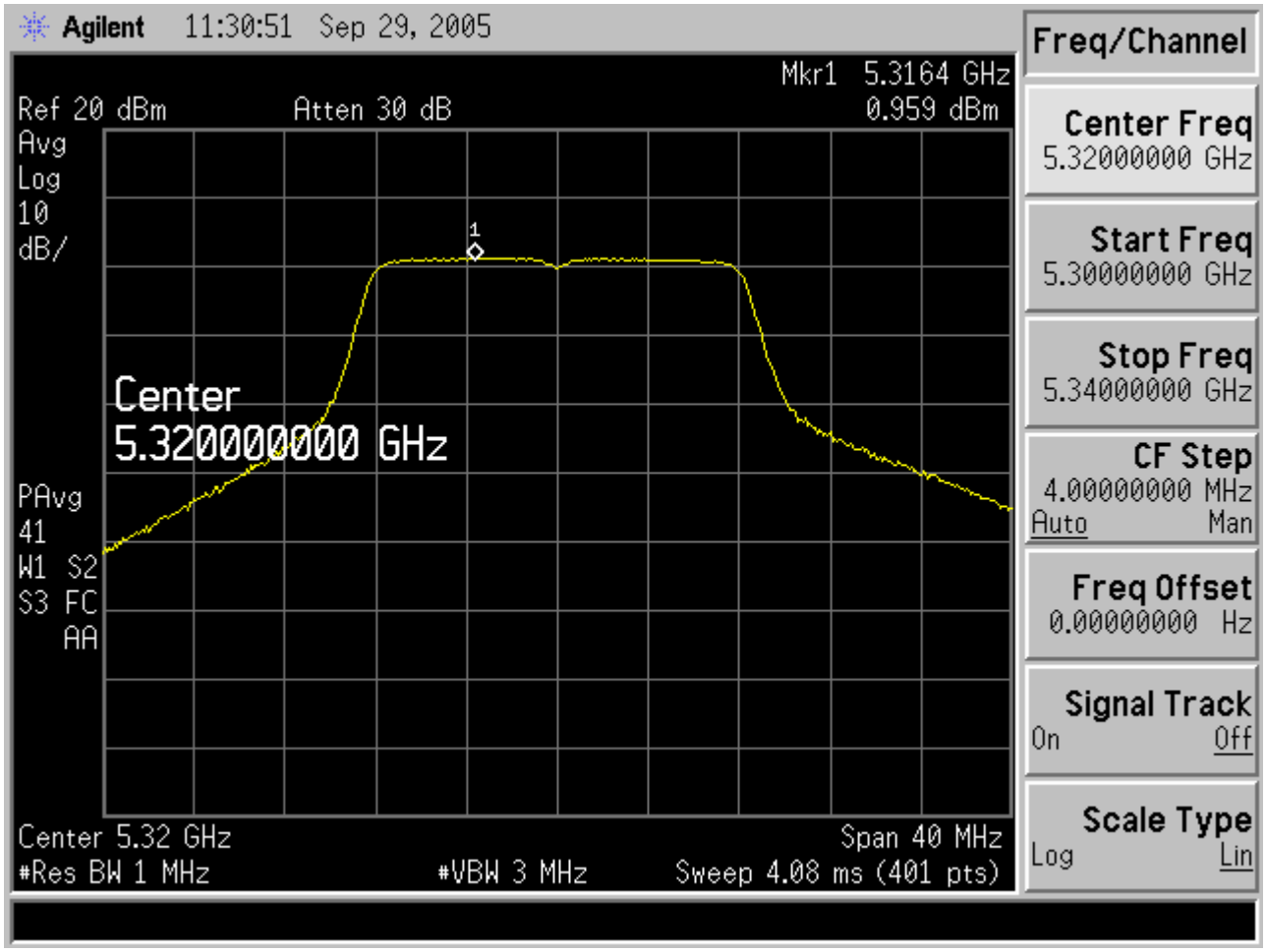

4. Peak Excursion Requirements

4.1 Test Limit & Setup :

15.407 (a) (6) The ratio of the peak excursion of the modulation envelope (measured using a peak hold function) to the peak transmit power (measured as specified above) shall not exceed 13 dB across any 1 MHz bandwidth or the emission bandwidth whichever is less.

Spectrum Analyzer Seting :

	RBW	VBW
Trace 1	1MHz	3MHz
Trace 2	1MHz	300KHz

4.2 Test Instruments Configuration:

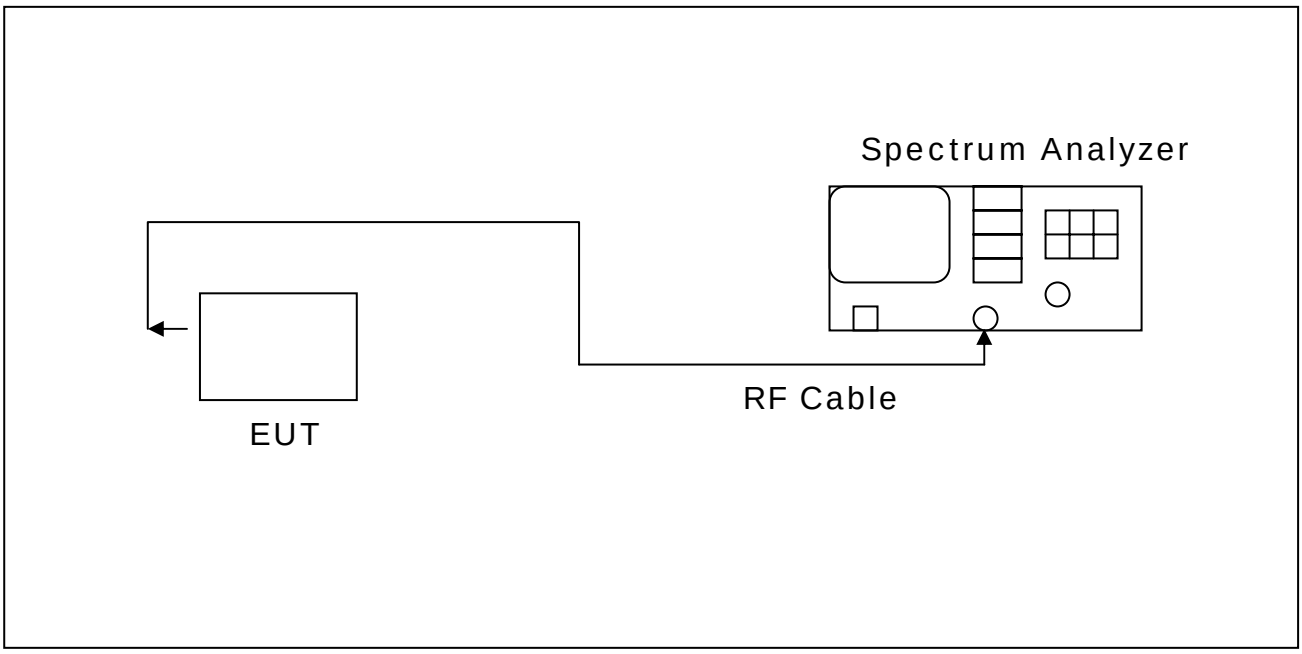

4.3 Test Equipment List:

Agilent E4407B 9KHz-26.5GHz Spectrum Analyzer (S/N:A872JS02291)

4.4 Test Result:

Frequency (MHz)	Peak Excursion (dB)	Required Limit
5180	3.847	<13dBm
5240	3.397	<13dBm
5260	3.673	<13dBm
5320	4.064	<13dBm

802.11a (5180MHz)

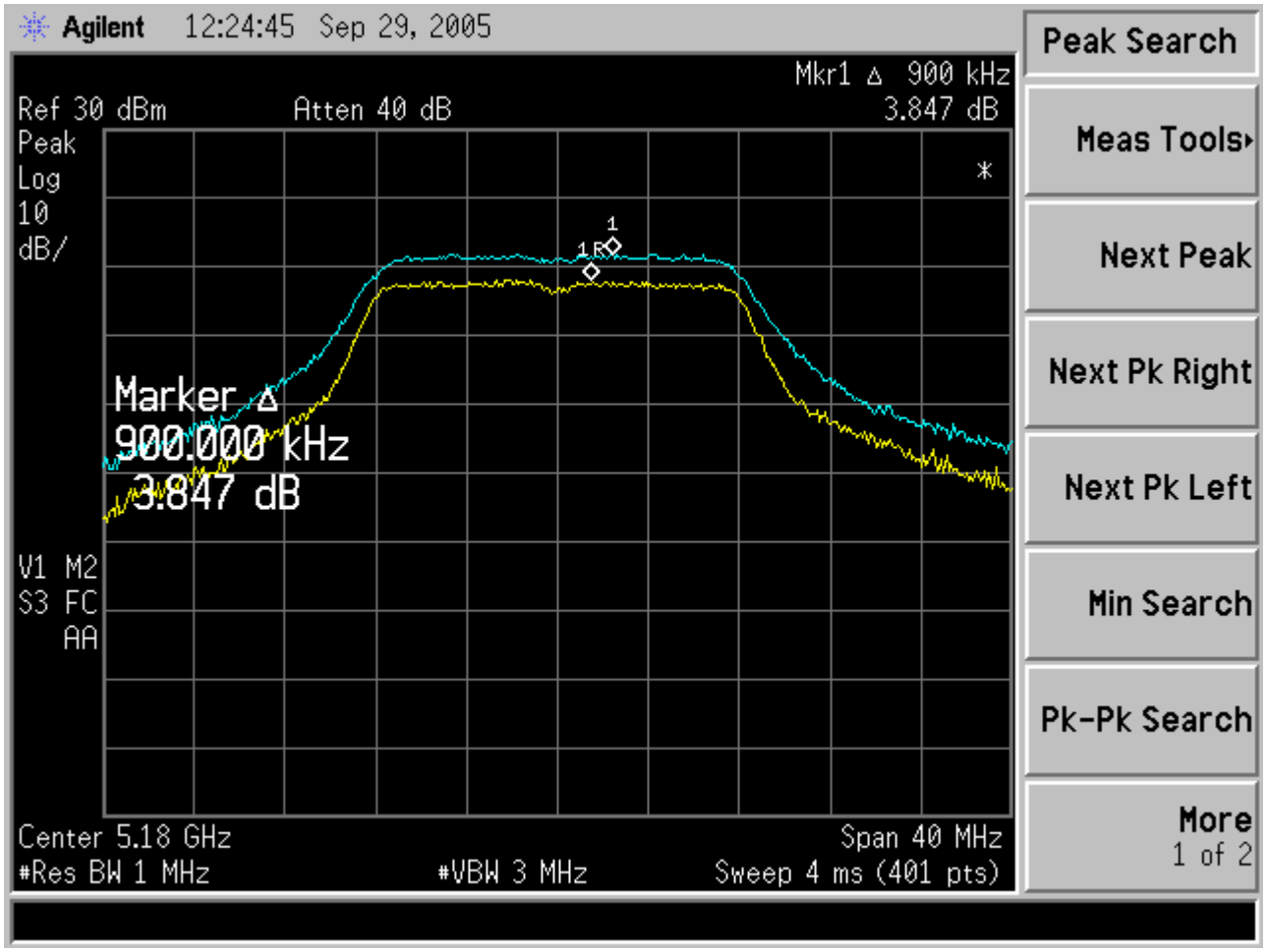

802.11a (5240MHz)

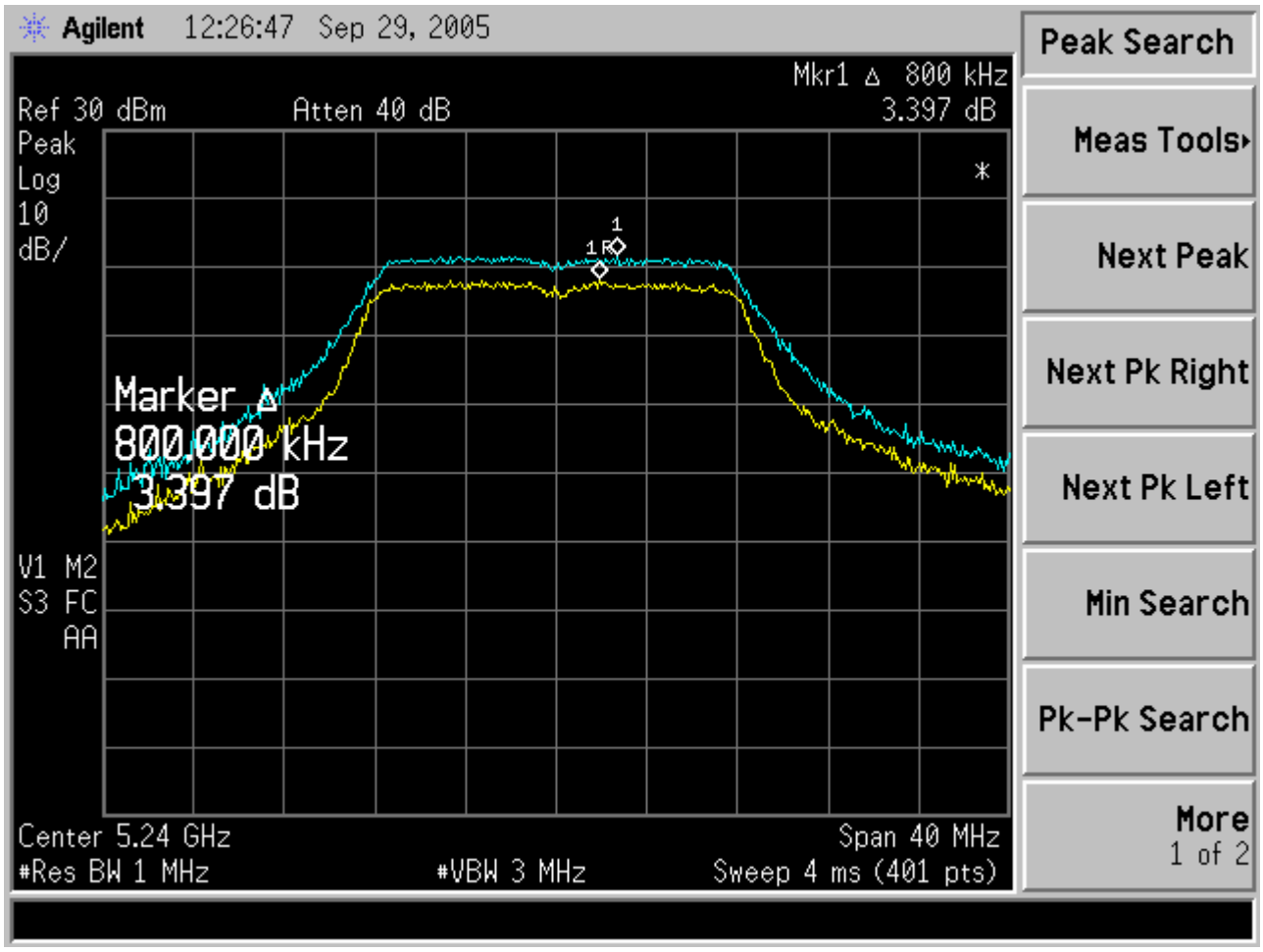

802.11a (5260MHz)

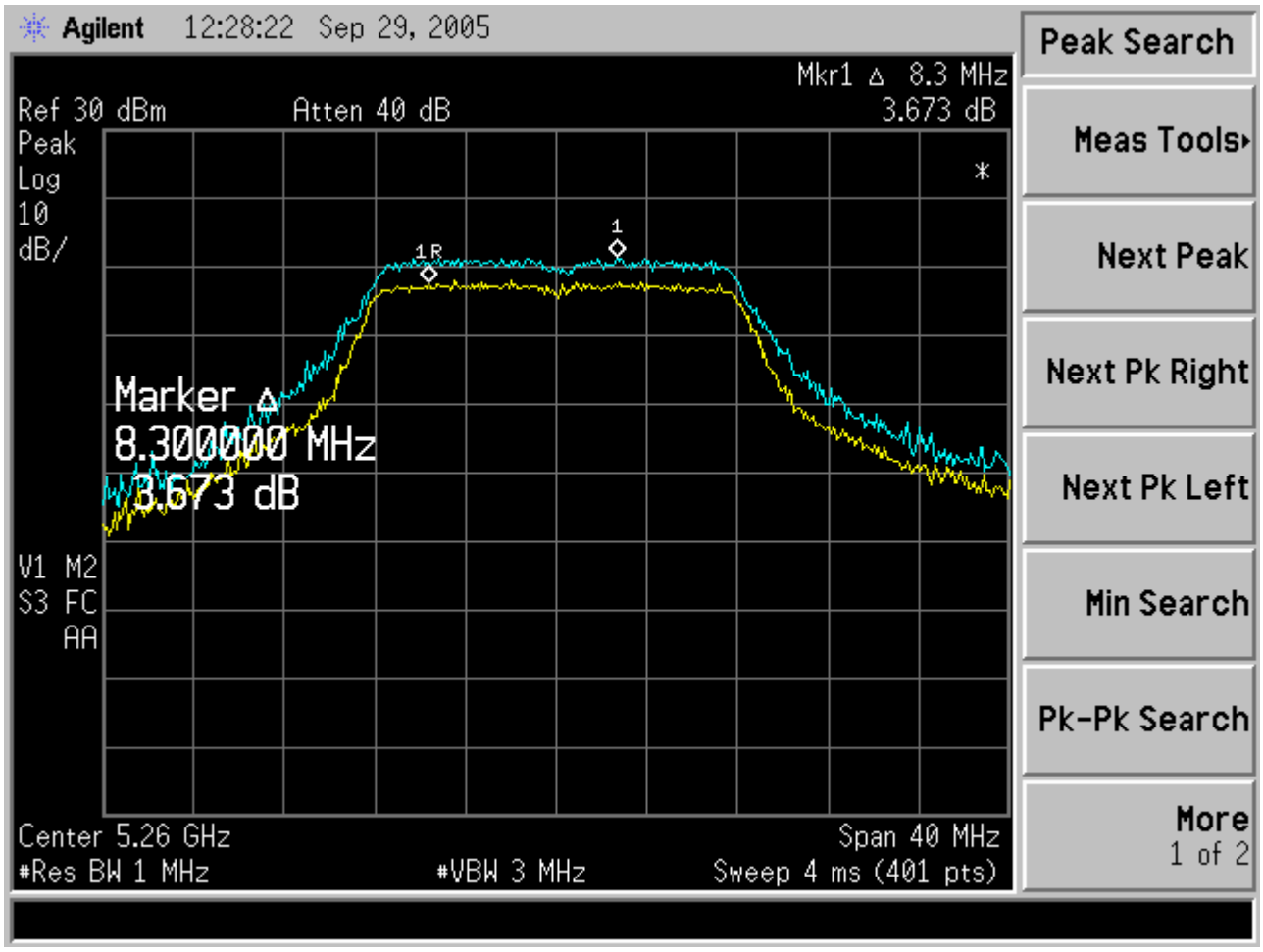

802.11a (5320MHz)

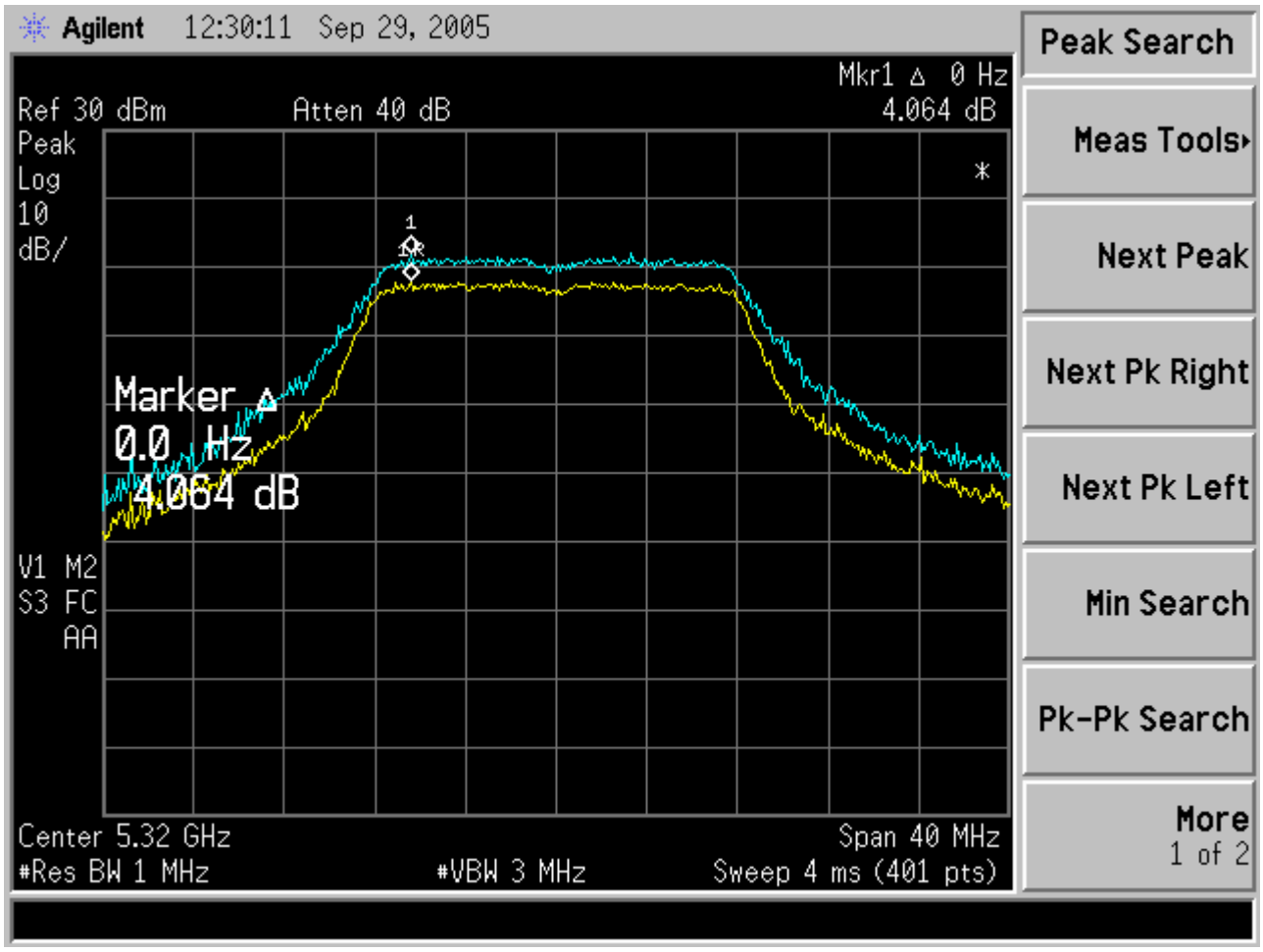

5. Band Edges Requirements

5.1 Test LImit & Setup :

In (Peak = RBW set 1MHz and VRB set 1 MHz) ; (Average = RBW set 1MHz and VRB set 10Hz) bandwidth outside the EUT passband, the RF power produced by the modulation products of the spreading sequence, the information sequence, and the carrier frequency shall be at least 20 dB below that of the maximum in-band emission, antenna output of the EUT was coupled directly to spectrum analyzer; if an external attenuator and/or cable was used, these losses are compensated for with the analyzer OFFSET function.

5.2 Test Instruments Configuration:

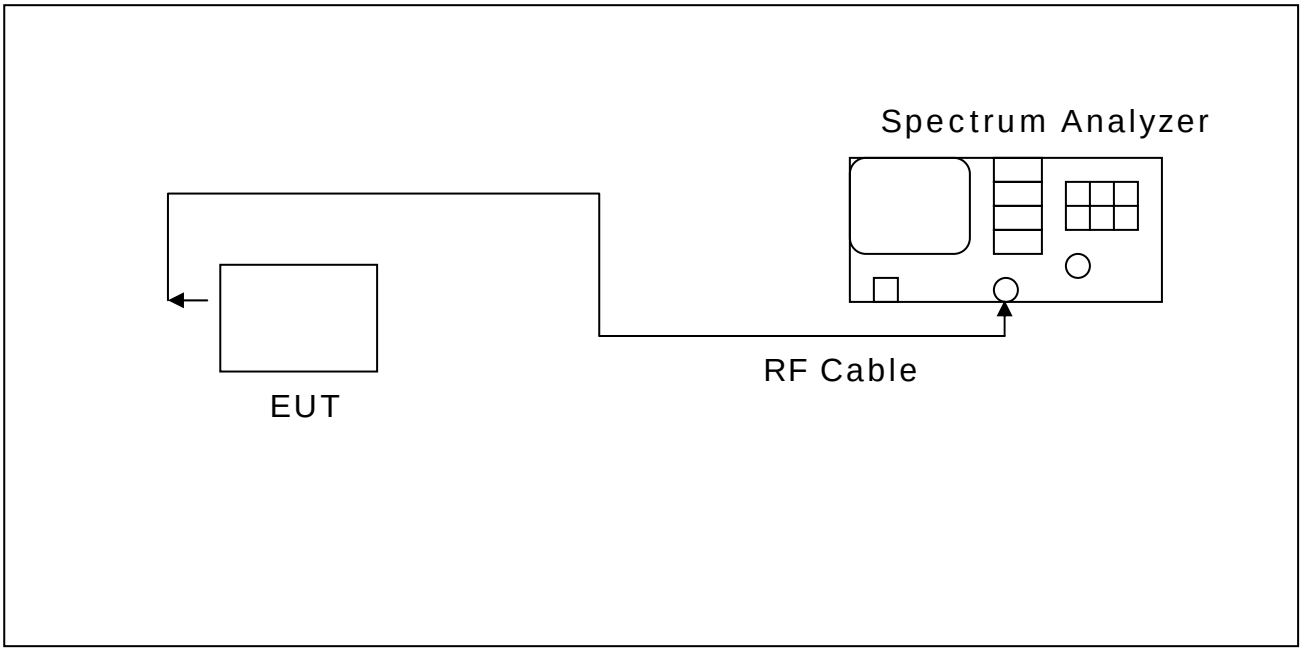

5.3 Test Equipment List:

Agilent E4407B 9KHz-26.5GHz Spectrum Analyzer (S/N:A872JS02291)
Agilent E4446A 3Hz-44GHz Spectrum Analyzer (S/N:US44300422)

5.4 Test Result:

Refer to attached data sheets. Data shows out of band emissions are suppressed well below the -20 dBc minimum required by the Rules.

802.11a (5180MHz)

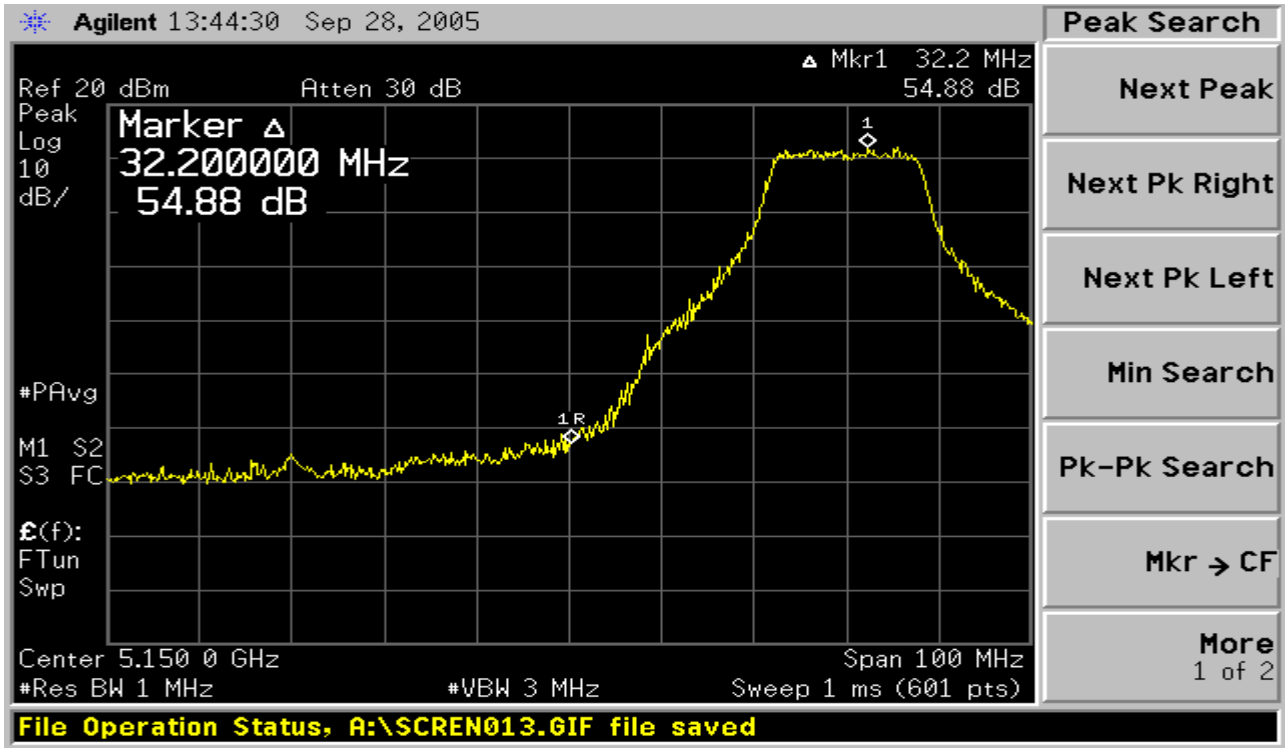

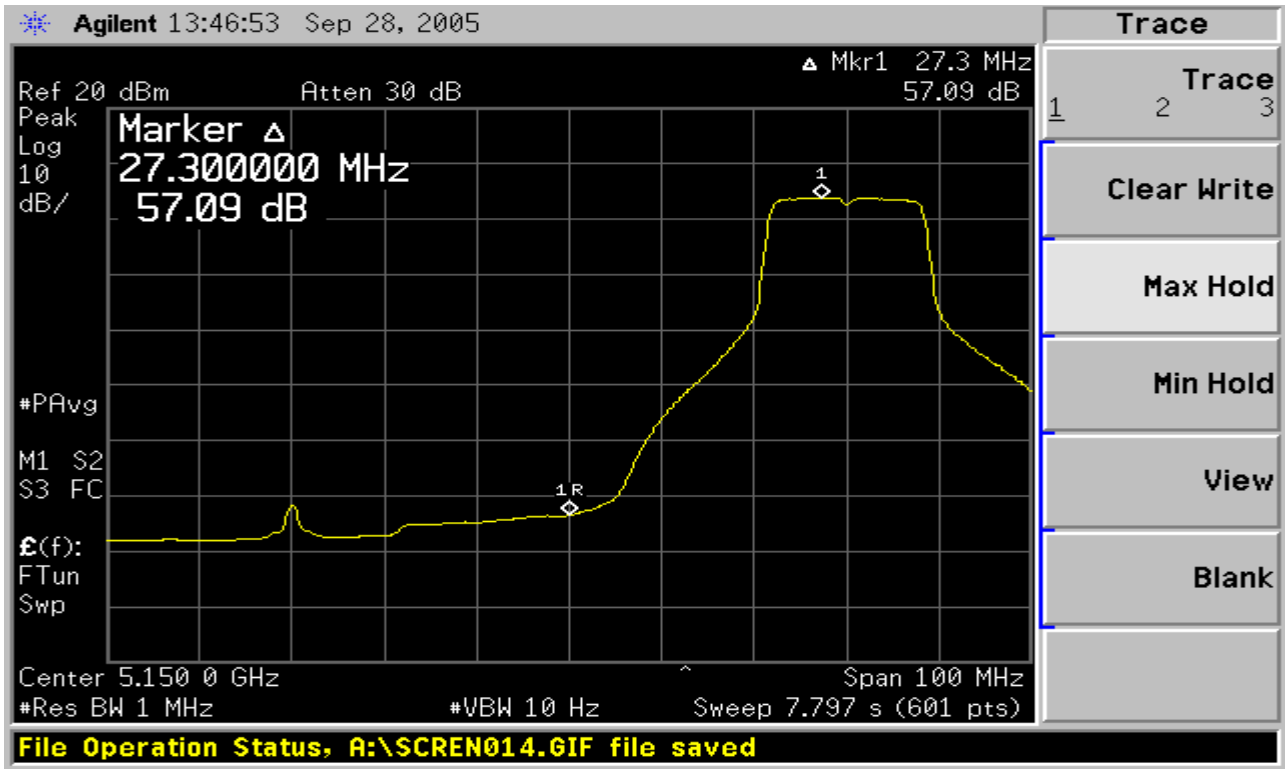

802.11a (5320MHz)

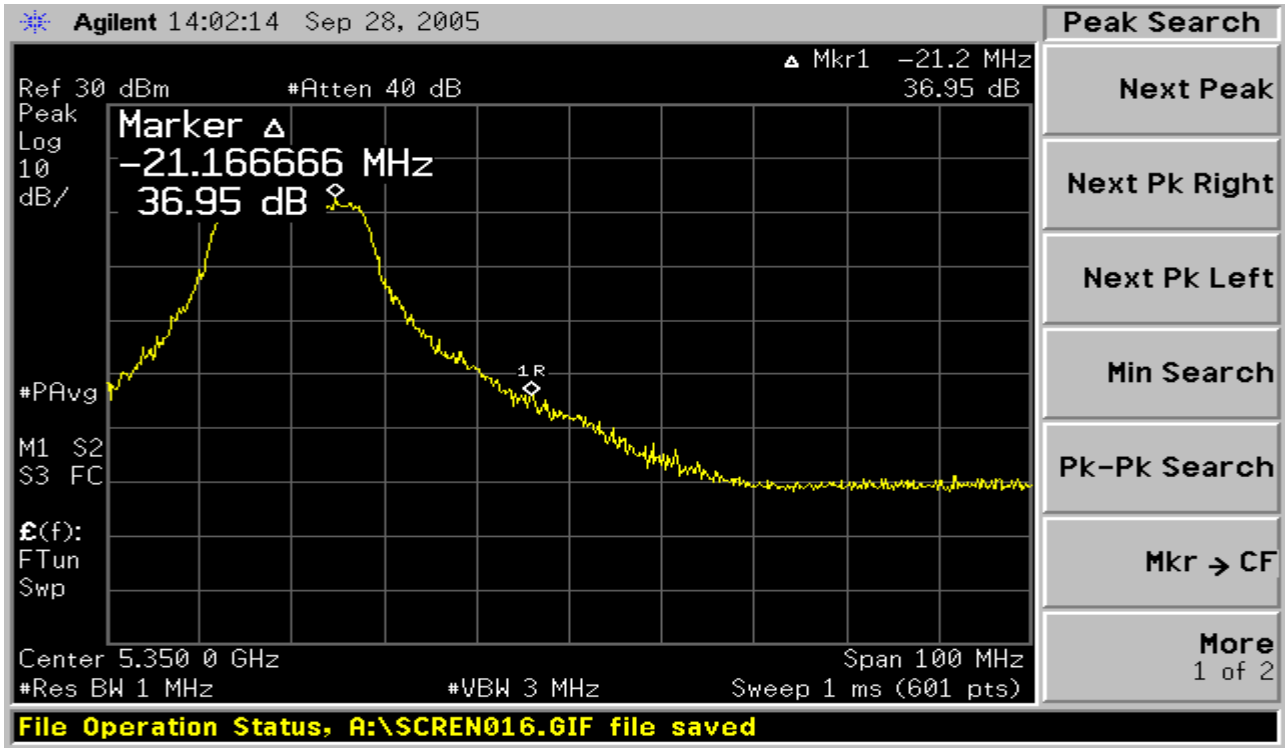

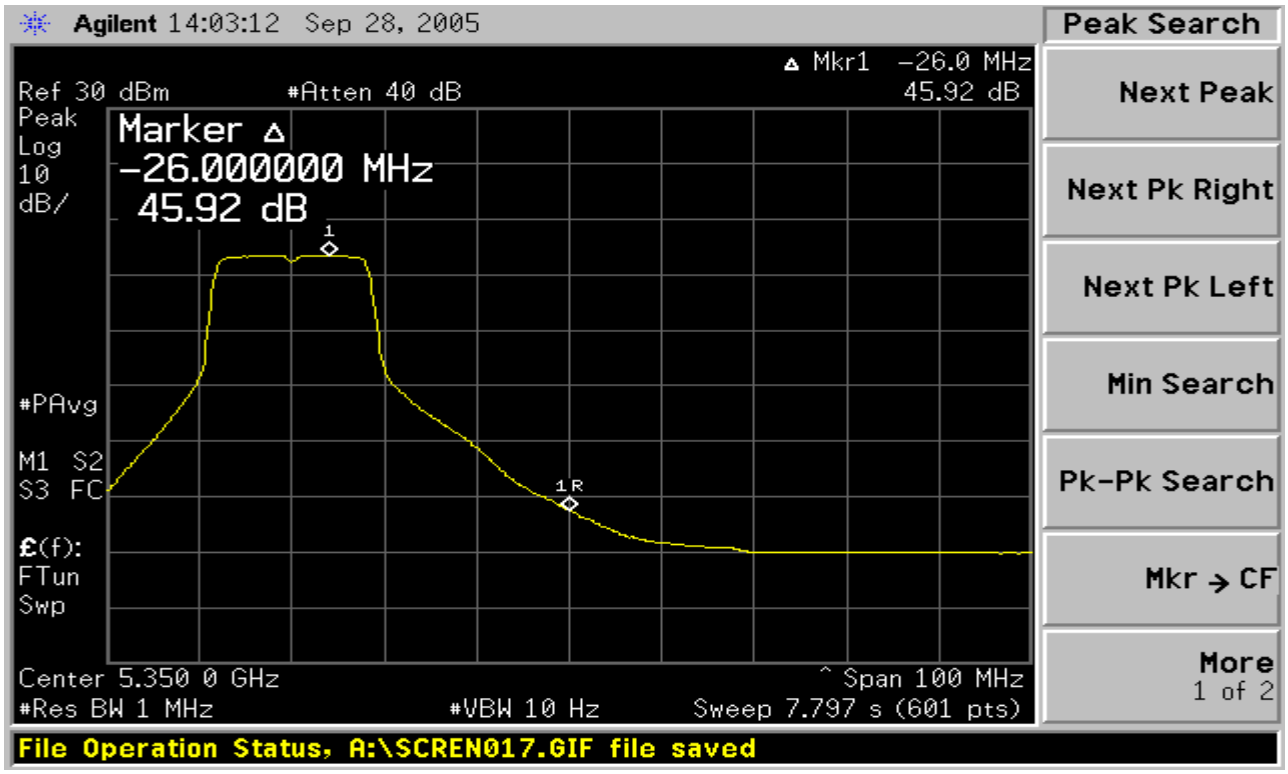

6. Frequency Stability Requirements

6.1 Test LImit & Setup :

The frequency tolerance of the carrier signal shall be within +/- 0.002% of the operating frequency .Variation temperature of -30 ℃ to 50 ℃ at normal supply voltage and variation AC power supply from 85% to 115% of the rated supply voltage at a temperature of 20 ℃.

6.2 Test Instruments Configuration:

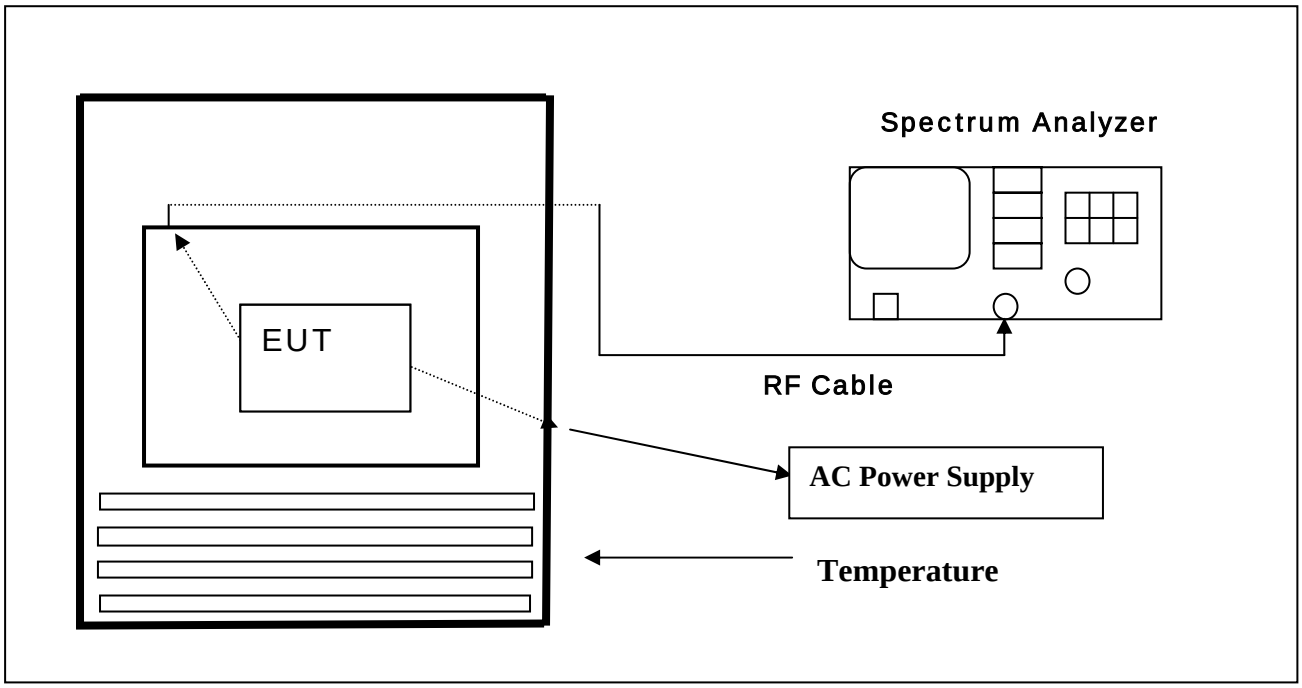

6.3 Test Equipment List:

Agilent E4407B 9KHz-26.5GHz Spectrum Analyzer (S/N:A872JS02291)

6.4 Test Result:

Frequency : 5320MHz							Limit : ± 0.002%
Temp	Power	0 minute		5 minute		10 minute	
(℃)	(V AC)	MHz	(%)	MHz	(%)	MHz	(%)
50	126.5	5319.9674	0.000612	5319.9676	0.000609	5319.9679	0.000604
	110	5319.9672	0.000617	5319.9673	0.000614	5319.9677	0.000607
	93.5	5319.9674	0.000612	5319.9675	0.000611	5319.9676	0.000609
40	126.5	5319.9764	0.000445	5319.9765	0.000442	5319.9766	0.000440
	110	5319.9763	0.000445	5319.9765	0.000442	5319.9763	0.000445
	93.5	5319.9765	0.000442	5319.9765	0.000441	5319.9770	0.000432
30	126.5	5319.9896	0.000195	5319.9899	0.000190	5319.9897	0.000194
	110	5319.9895	0.000197	5319.9898	0.000192	5319.9899	0.000190
	93.5	5319.9895	0.000197	5319.9897	0.000194	5319.9896	0.000196
20	126.5	5319.9997	0.000006	5319.9999	0.000003	5319.9998	0.000004
	110	5319.9995	0.000009	5319.9997	0.000005	5319.9996	0.000008
	93.5	5319.9996	0.000008	5319.9997	0.000006	5319.9997	0.000006
10	126.5	5319.9993	0.000014	5319.9993	0.000014	5319.9997	0.000005
	110	5319.9992	0.000015	5319.9995	0.000010	5319.9995	0.000010
	93.5	5319.9994	0.000011	5319.9994	0.000011	5319.9996	0.000007
0	126.5	5319.9982	0.000033	5319.9984	0.000030	5319.9987	0.000024
	110	5319.998	0.000038	5319.9981	0.000036	5319.9984	0.000031
	93.5	5319.9982	0.000034	5319.9982	0.000034	5319.9986	0.000026
-10	126.5	5319.9876	0.000233	5319.9878	0.000229	5319.9879	0.000227
	110	5319.9875	0.000235	5319.9877	0.000231	5319.9878	0.000229
	93.5	5319.9875	0.000235	5319.9876	0.000233	5319.9879	0.000227
-20	126.5	5319.9814	0.000350	5319.9816	0.000346	5319.9818	0.000343
	110	5319.9812	0.000353	5319.9813	0.000351	5319.9814	0.000350
	93.5	5319.9814	0.000349	5319.9814	0.000349	5319.9819	0.000341
-30	126.5	5319.9787	0.000399	5319.9789	0.000397	5319.9790	0.000395
	110	5319.9785	0.000404	5319.9786	0.000401	5319.9788	0.000399
	93.5	5319.9787	0.000399	5319.9790	0.000395	5319.9789	0.000396

VI. 802.11a 5725MHz – 5850MHz

1. Peak Transmit Power Requirements

1.1 Test Limit & Setup :

15.407 (a) (3) For the band 5.725-5.85 GHz, the peak transmit power over the frequency band of operation shall not exceed the lesser of 1 W (30dBm) or 17 dBm + 10log B, where B is the 26-dB emission bandwidth in MHz. In addition, the peak power spectral density shall not exceed 17 dBm in any 1-MHz band. If transmitting antennas of directional gain greater than 6 dBi are used, both the peak transmit power and the peak power spectral density shall be reduced by the amount in dB that the directional gain of the antenna exceeds 6 dBi.

1.2 Test Instruments Configuration:

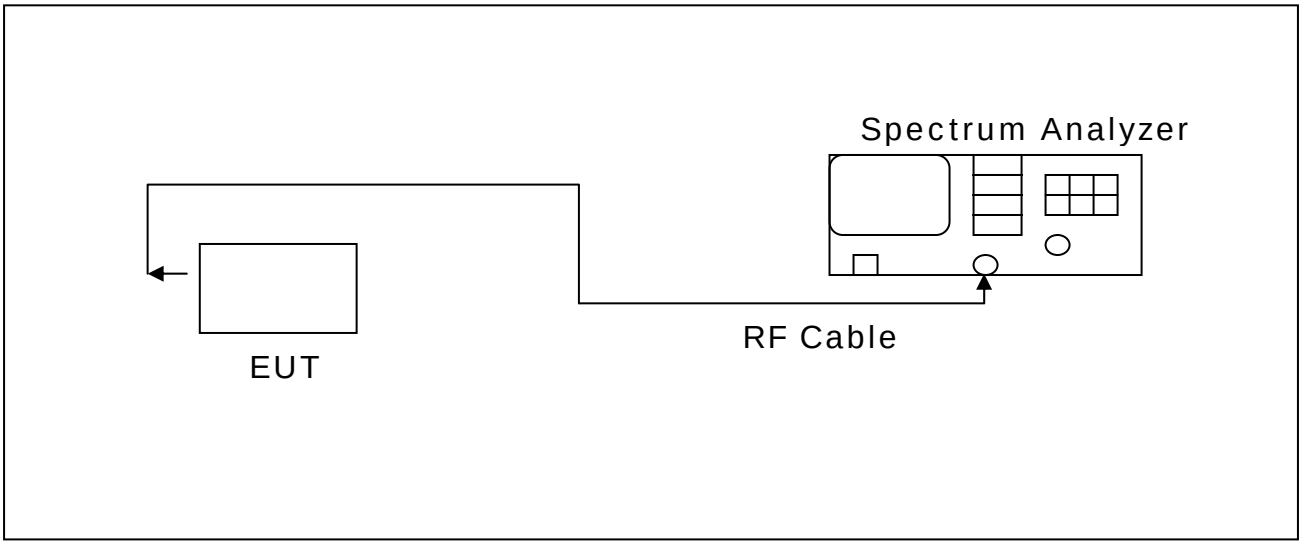

1.3 Test Equipment List:

Agilent E4407B 9KHz-26.5GHz Spectrum Analyzer (S/N:A872JS02291)

1.4 Test Result:

Frequency (MHz)	Output(dBm)	Required Limit
5740	15.61	30.0dBm
5800	14.92	30.0dBm
5840	14.81	30.0dBm

2. Minimum 6dB RF Bandwidth Requirements

2.1 Test Limit & Setup :

The antenna port of the EUT was connected to the input of a spectrum analyzer. Analyzer RBW was set to 100 kHz and VBW set 100kHz . For each RF output channel investigated, the spectrum analyzer center frequency was set to the channel carrier. The 6 dB bandwidth was determined from where the channel output spectrum intersected the display line.
The minimum of 6dB bandwidth measurement is 500kHz.

2.2 Test Instruments Configuration:

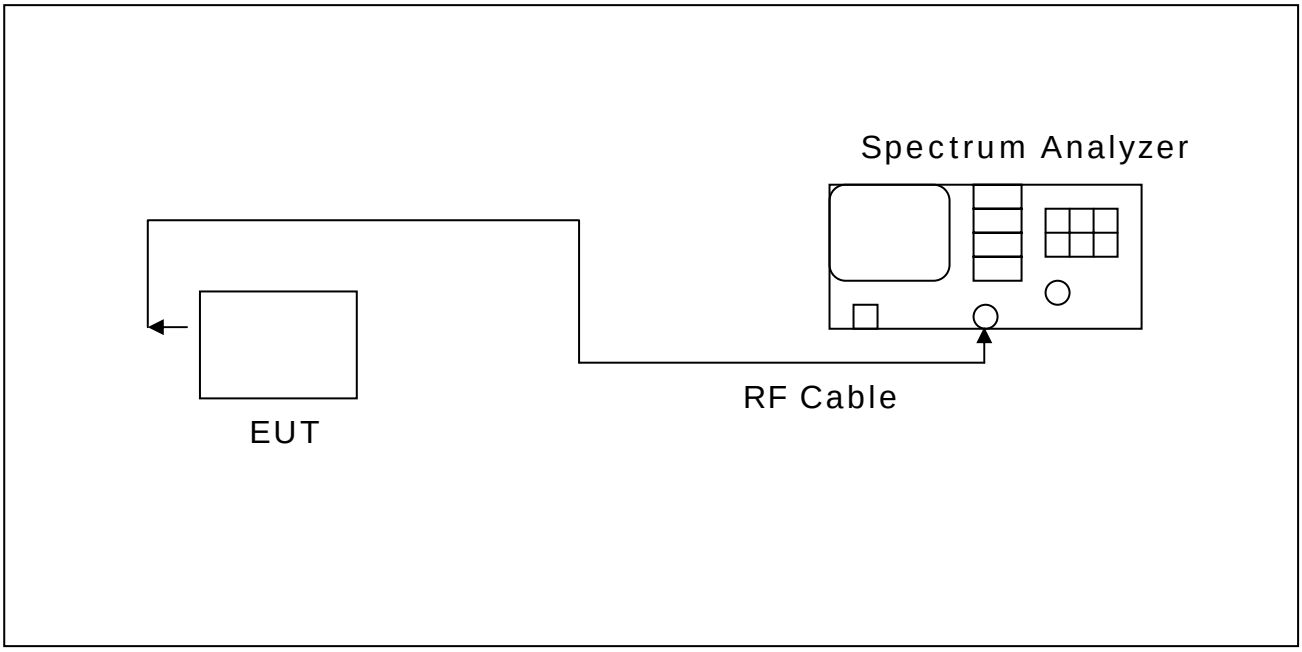

2.3 Test Equipment List:

Agilent E4407B 9KHz-26.5GHz Spectrum Analyzer (S/N:A872JS02291)

2.4 Test Result:

Frequency (MHz)	Min. 6dB Bandwidth (MHz)	Required Limit
5740	16.5	>500KHz
5800	16.5	>500KHz
5840	16.6	>500KHz

802.11a (5740MHz)

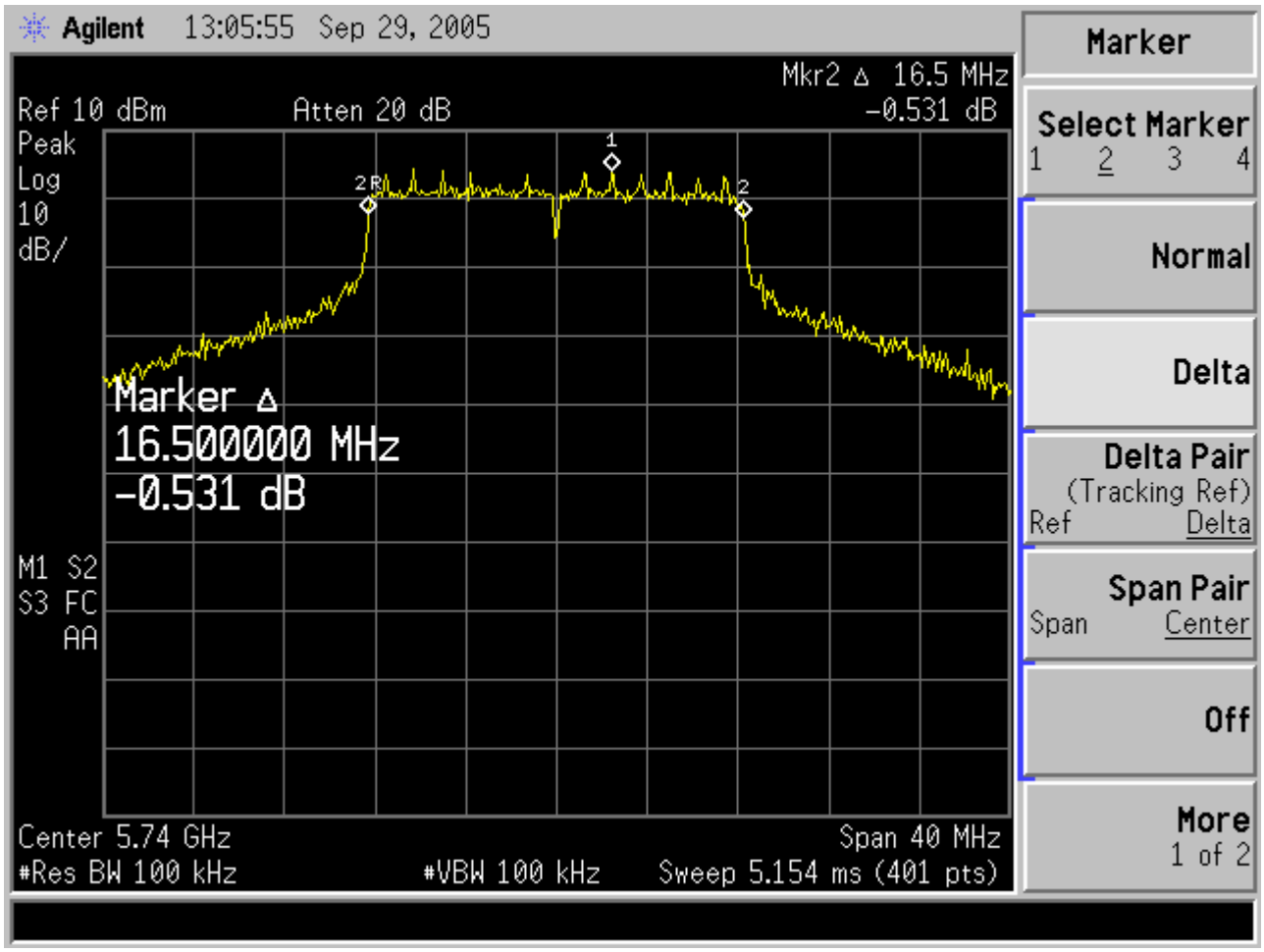

802.11a (5800MHz)

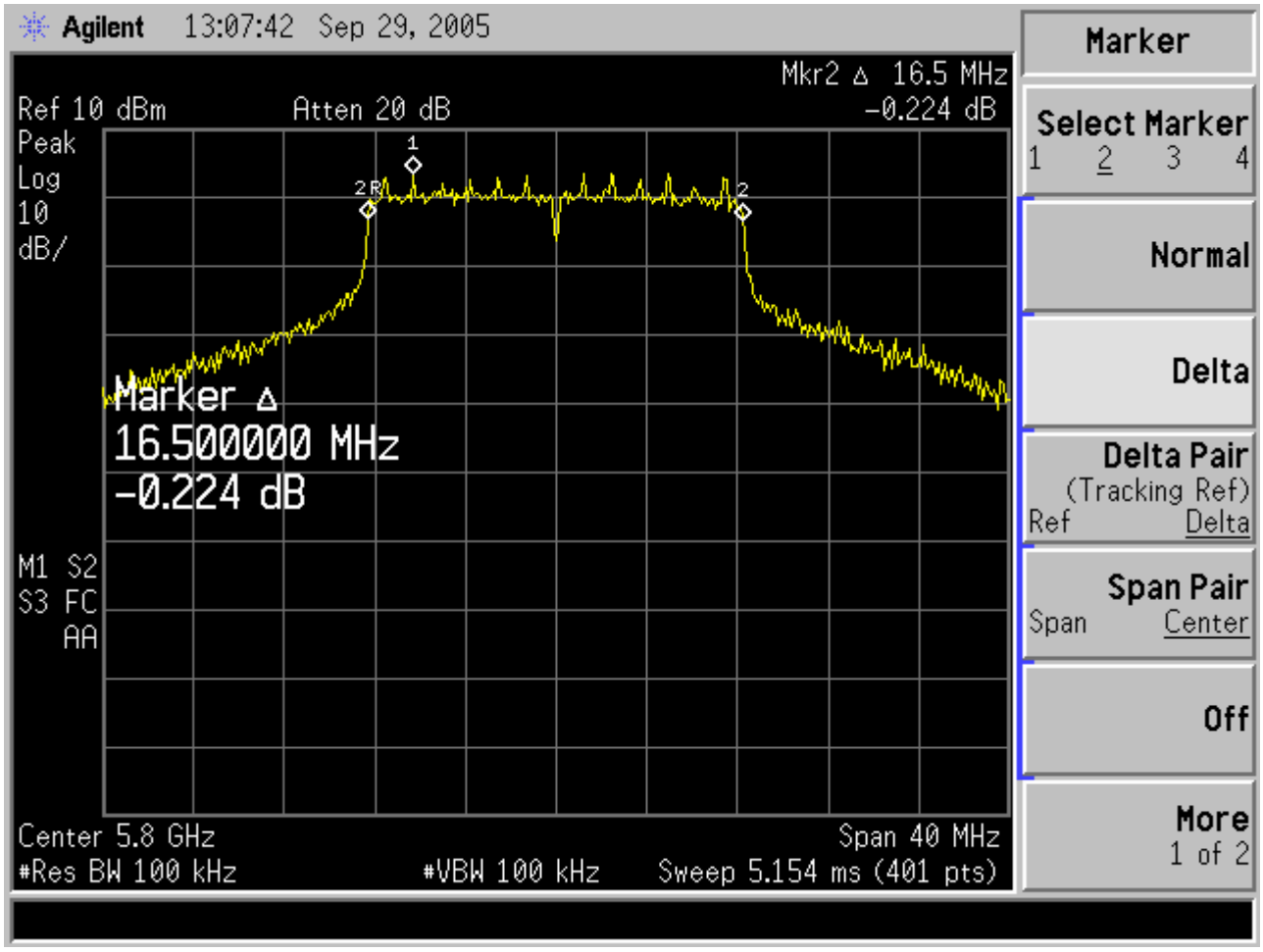

802.11a (5840MHz)

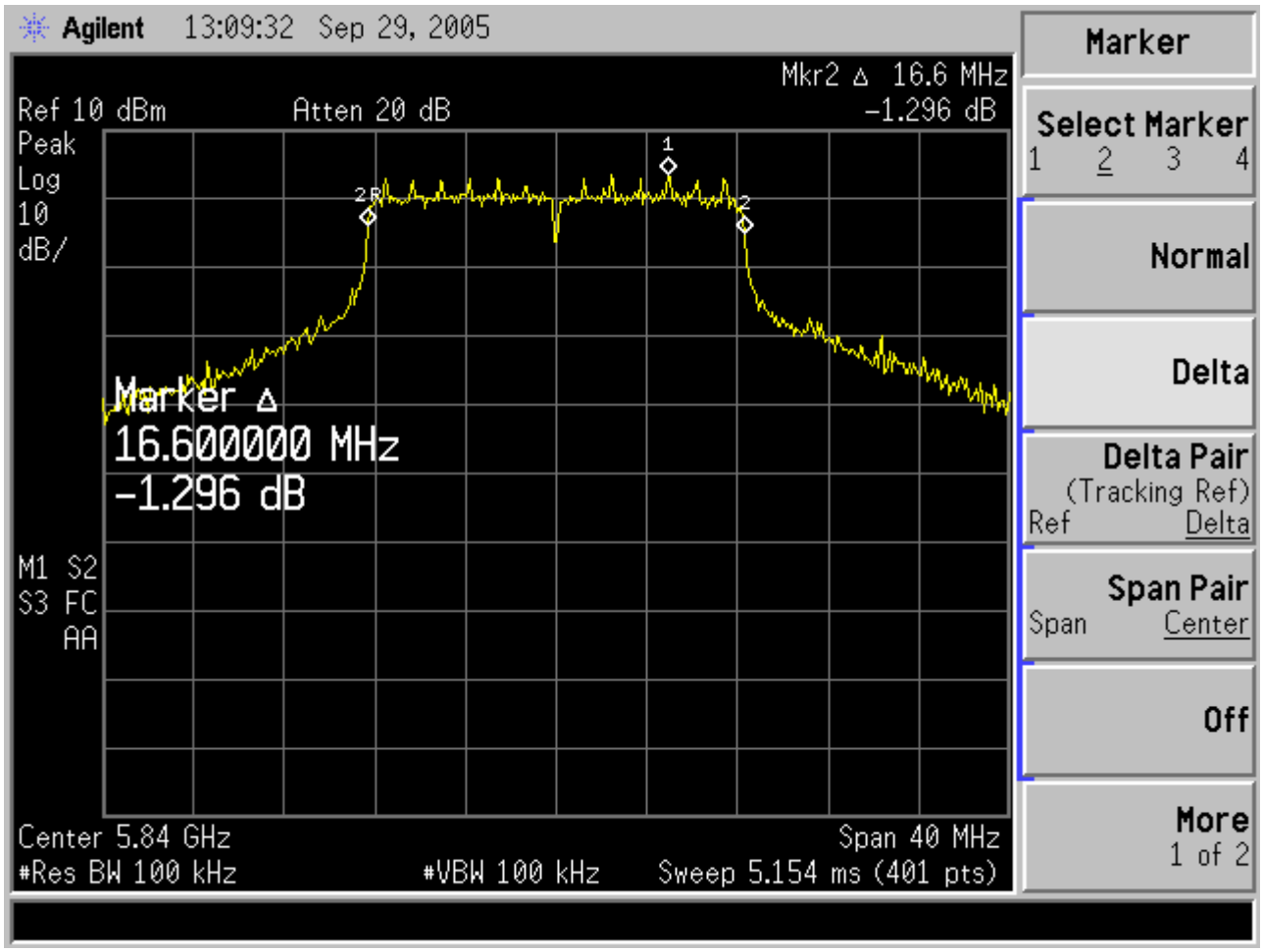

3. Maximum Power Density Requirements

3.1 Test Limit & Setup :

The spectrum analyzer RBW set to 3 kHz and VBW set 30 kHz. The START and STOP frequencies were set to the band edges of the maximum output passband. If there is no clear maximum amplitude in any given portion of the band, it may be necessary to make measurements at a number of bands defined by several START and STOP frequency pairs. The specification calls for a 1 second interval at each 3 kHz bandwidth; total SWEEP TIME is calculated as follows:

SWEEP TIME (SEC) = (Fstop, kHz - Fstart, kHz)/3 kHz
SWEEP TIME (SEC) =500sec

Antenna output of the EUT was coupled directly to spectrum analyzer; if an external attenuator and/or cable was used, these losses are compensated for with the analyzer OFFSET function.

3.2 Test Instruments Configuration:

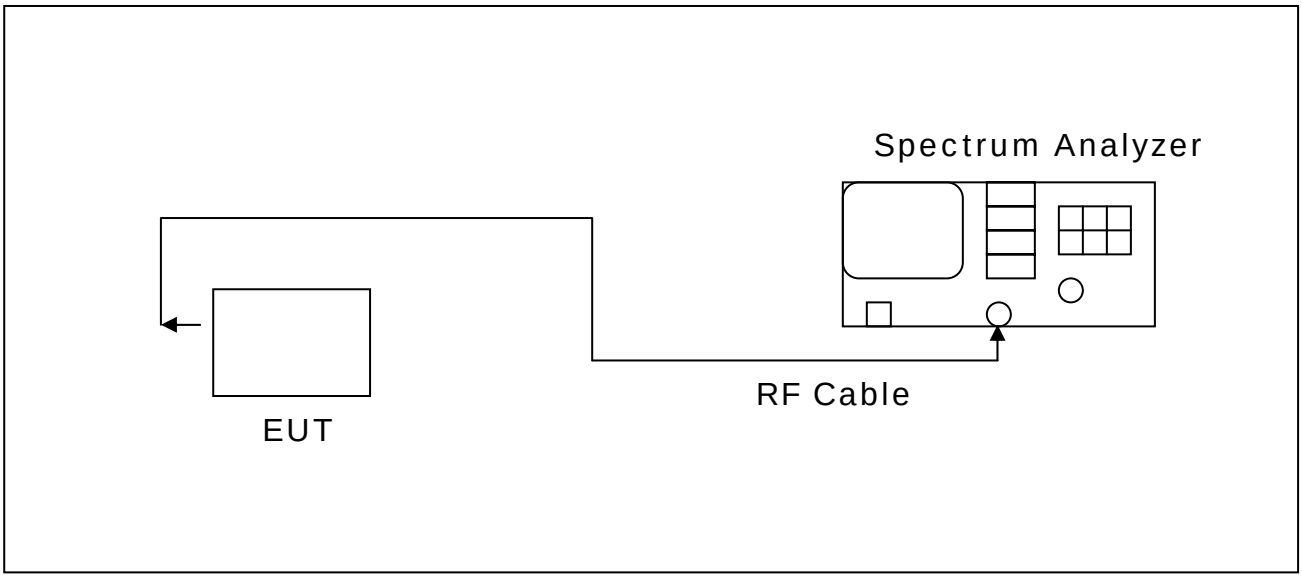

3.3 Test Equipment List:

Agilent E4407B 9KHz-26.5GHz Spectrum Analyzer (S/N:A872JS02291)

3.4 Test Result:

Frequency (MHz)	RF Power Level (dBm)	Required Limit
5740	-8.556	<8dBm
5800	-9.17	<8dBm
5840	-8.863	<8dBm

802.11a (5740MHz)

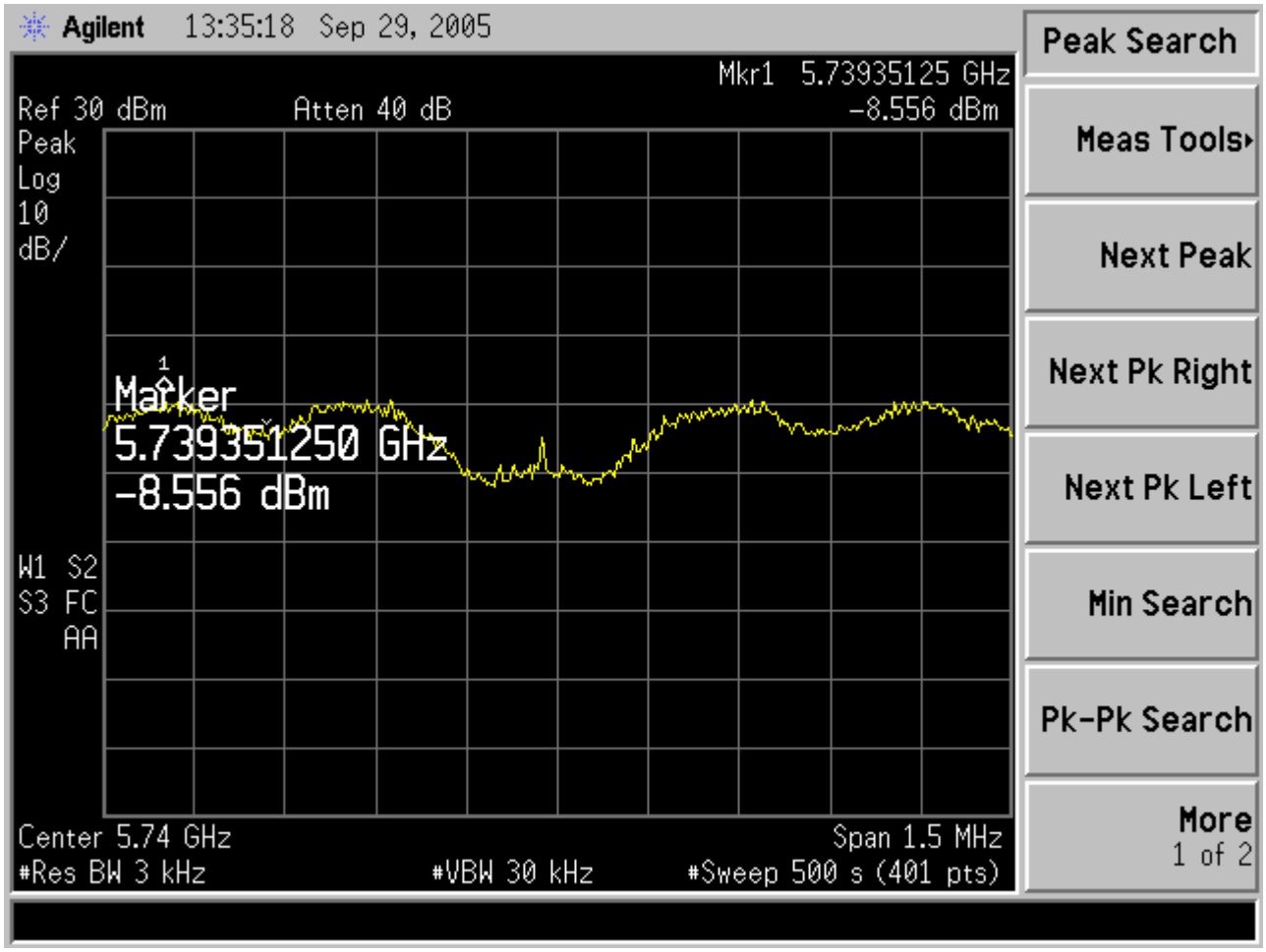

802.11a (5800MHz)

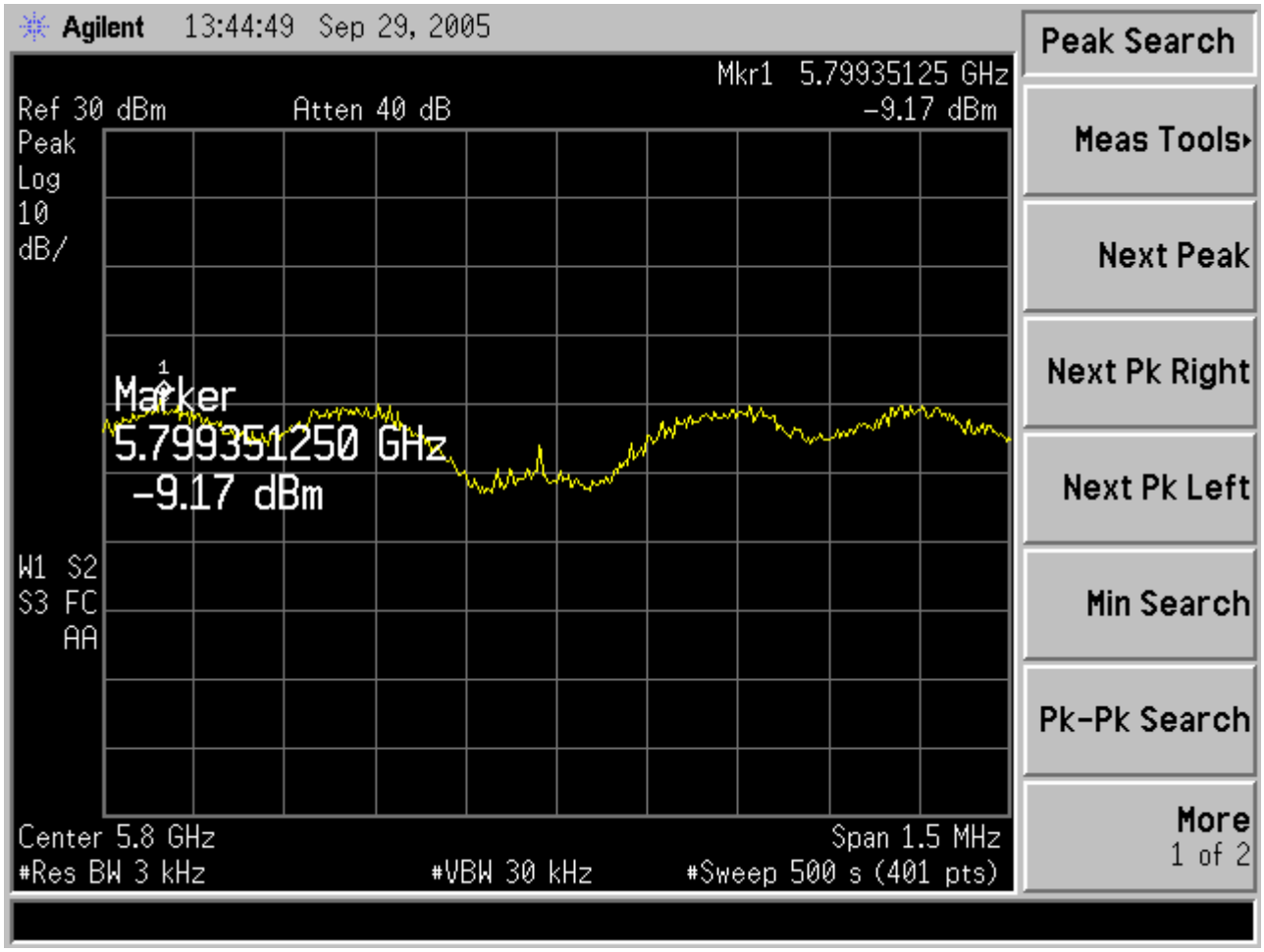

802.11a (5840MHz)

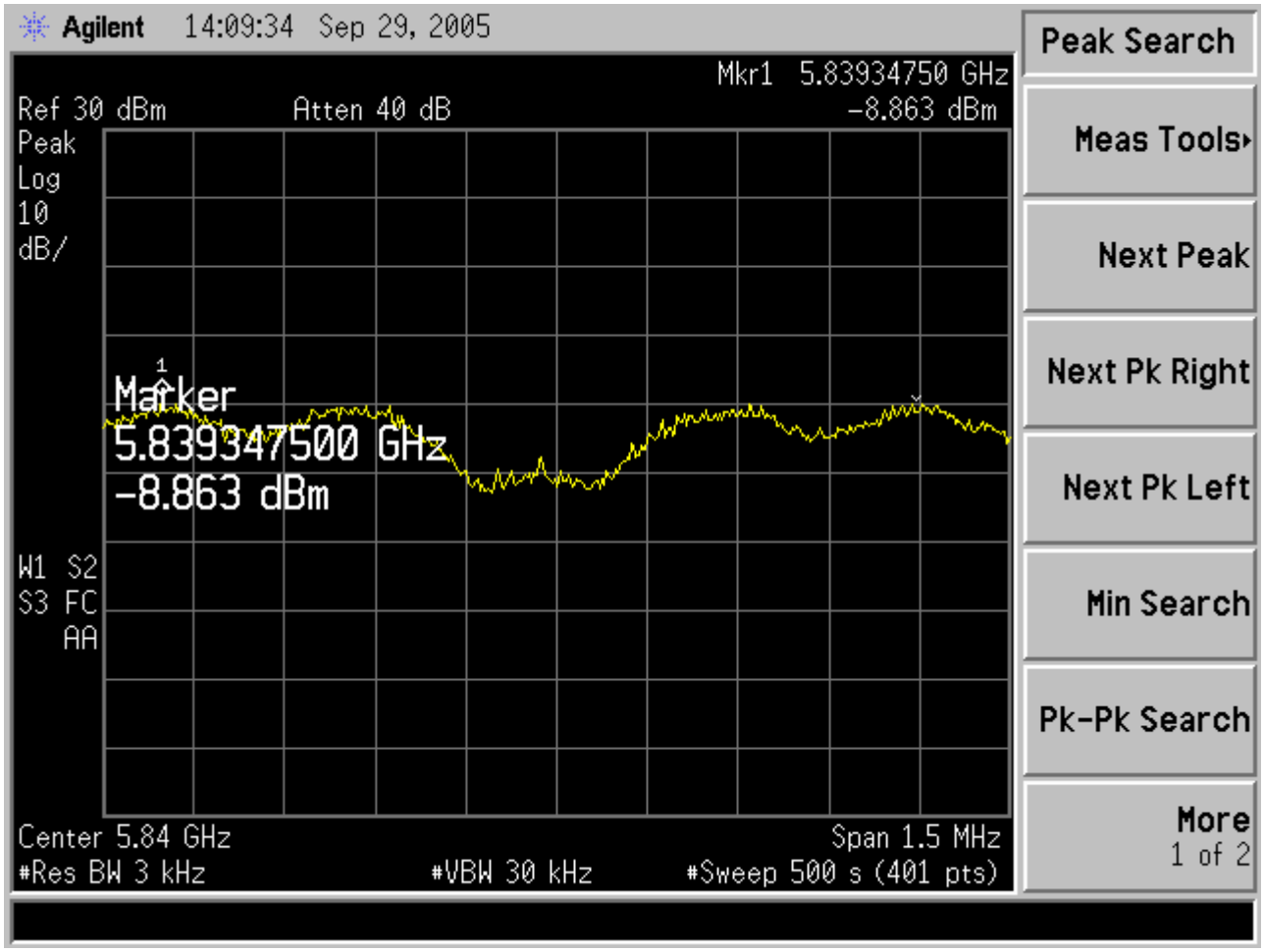

4. Band Edges Requirements

4.1 Test LImit & Setup :

In any 100 kHz bandwidth outside the EUT passband, the RF power produced by the modulation products of the spreading sequence, the information sequence, and the carrier frequency shall be at least 20 dB below that of the maximum in-band 100 kHz emission, antenna output of the EUT was coupled directly to spectrum analyzer; if an external attenuator and/or cable was used, these losses are compensated for with the analyzer OFFSET function.

4.2 Test Instruments Configuration:

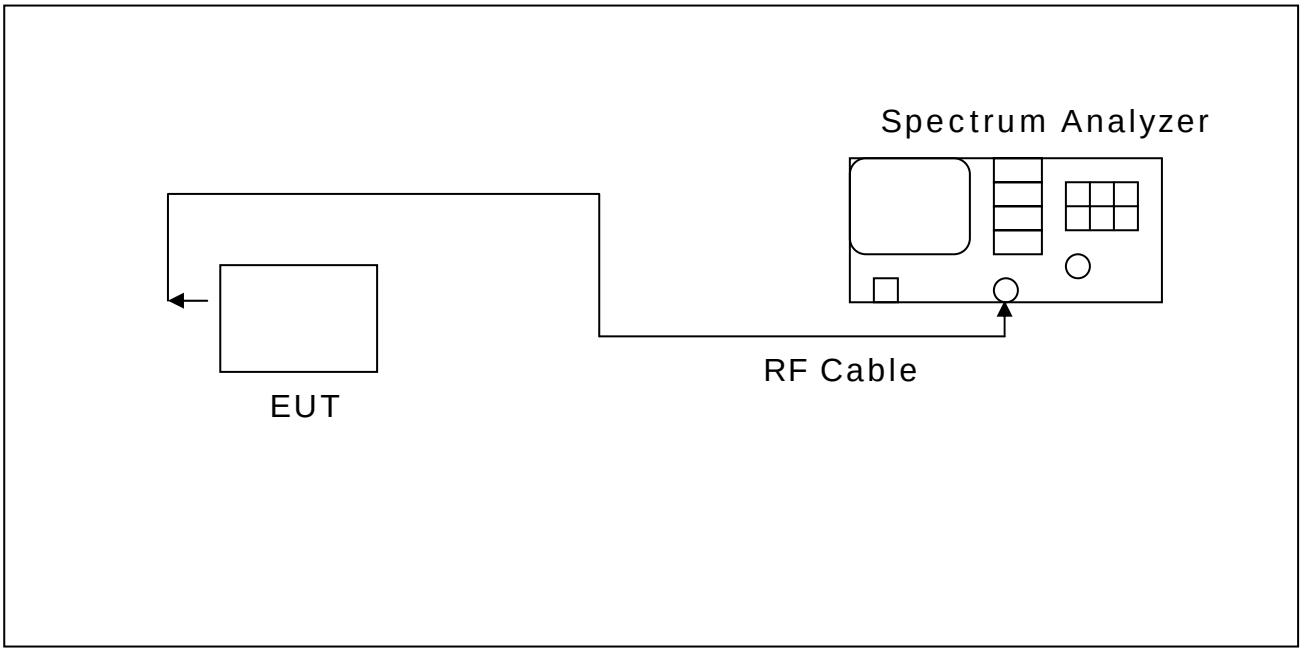

4.3 Test Equipment List:

Agilent E4407B 9KHz-26.5GHz Spectrum Analyzer (S/N:A872JS02291)

4.4 Test Result:

Refer to attached data sheets. Data shows out of band emissions are suppressed well below the -20 dBc minimum required by the Rules.

802.11a (5740MHz)

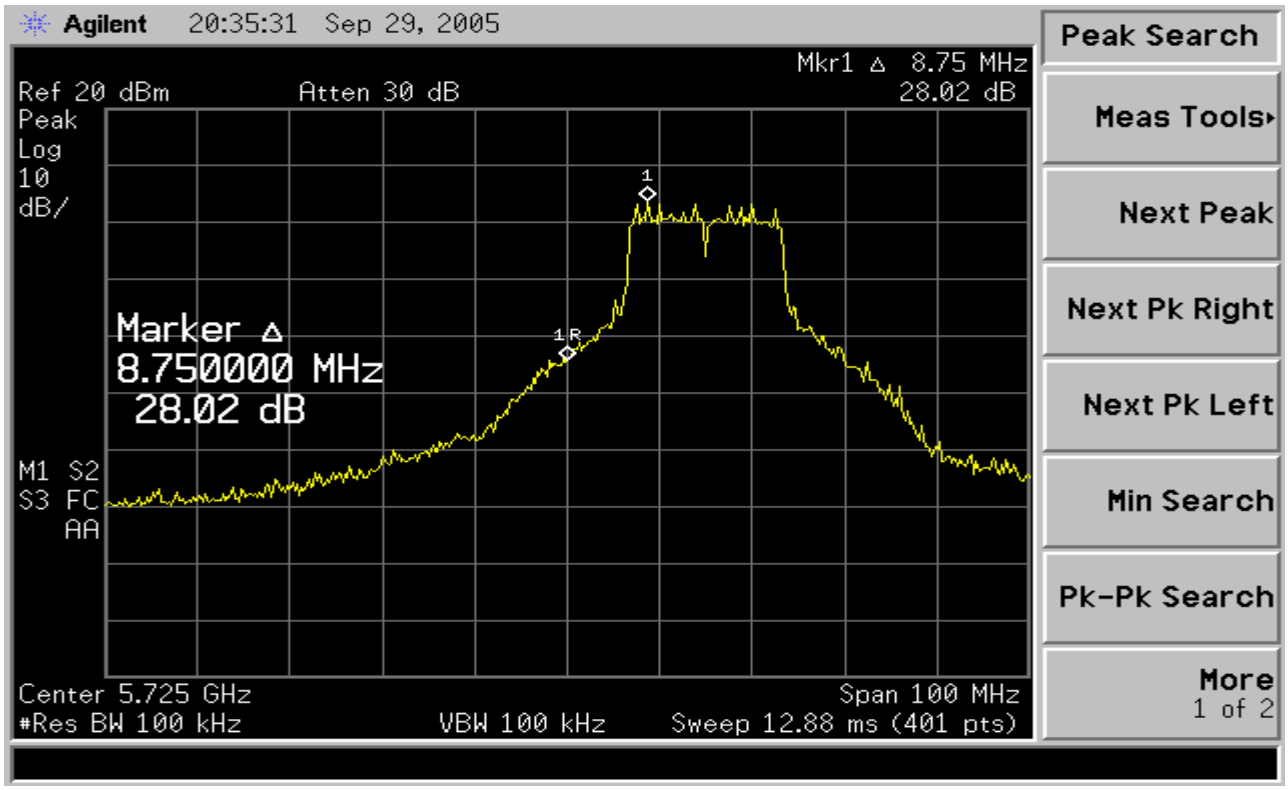

802.11a (5840MHz)

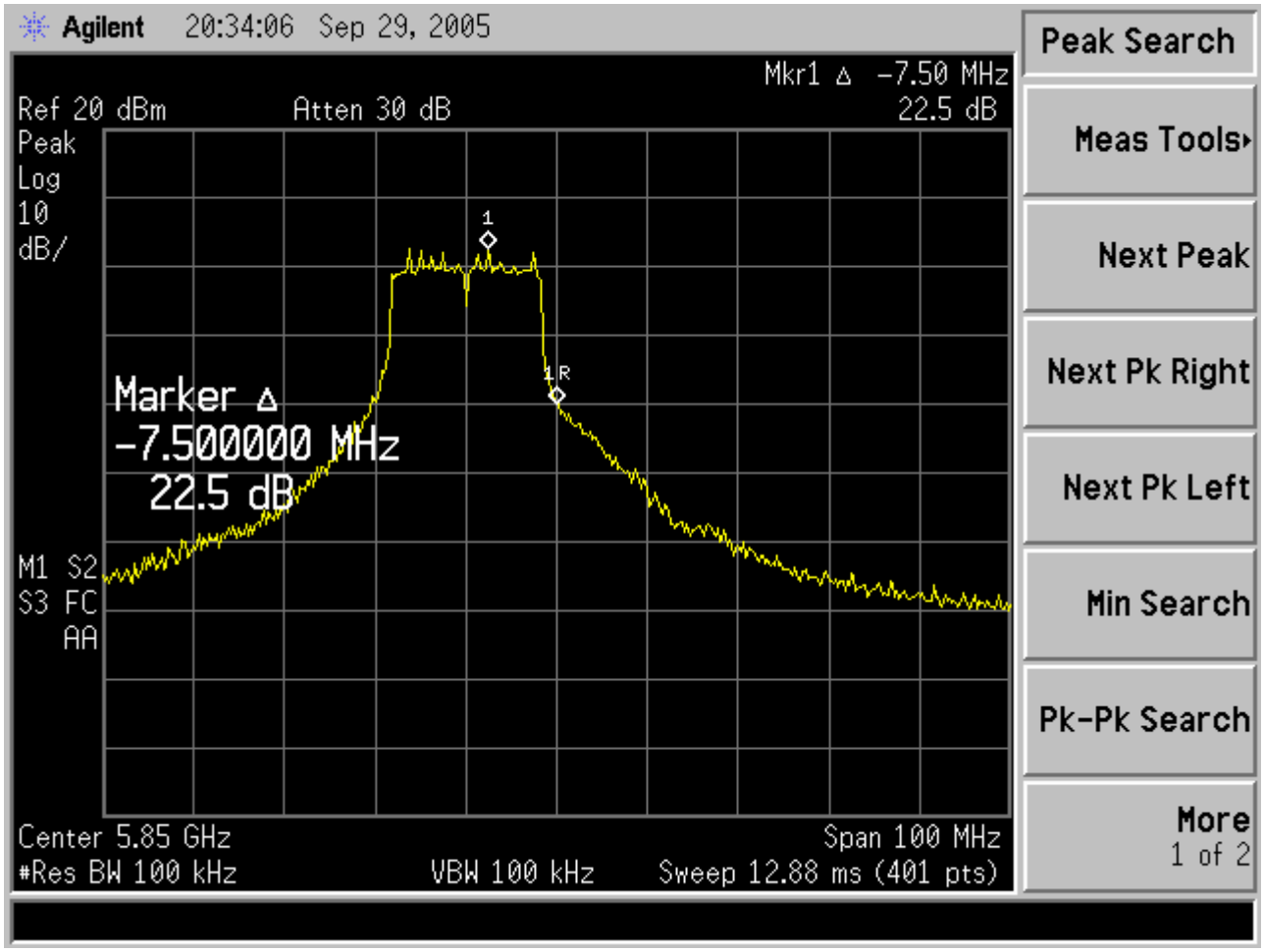

VII. Antenna Requirements

1.1 Standard Applicable :

For intentional device, according to 15.203, an intentional radiator shall be designed to ensure that no antenna other than that furnished by the responsible party shall be used with the device.

And According to 15.247 (b), if transmitting antennas of directional gain greater than 6 dBi are used, the power shall be reduced by the amount in dB that the directional gain of the antenna exceeds 6dBi.

1.2 Antenna Connector Construction

The antenna used in this product is1/4 λDIOPLE antenna with UFL connector. And the maximum Gain of this antenna is only 2.0dBi .

Appendix I- EUT Test SETUP

MEASUREMENT OF POWER LINE CONDUCTED RFI VOLTAGE

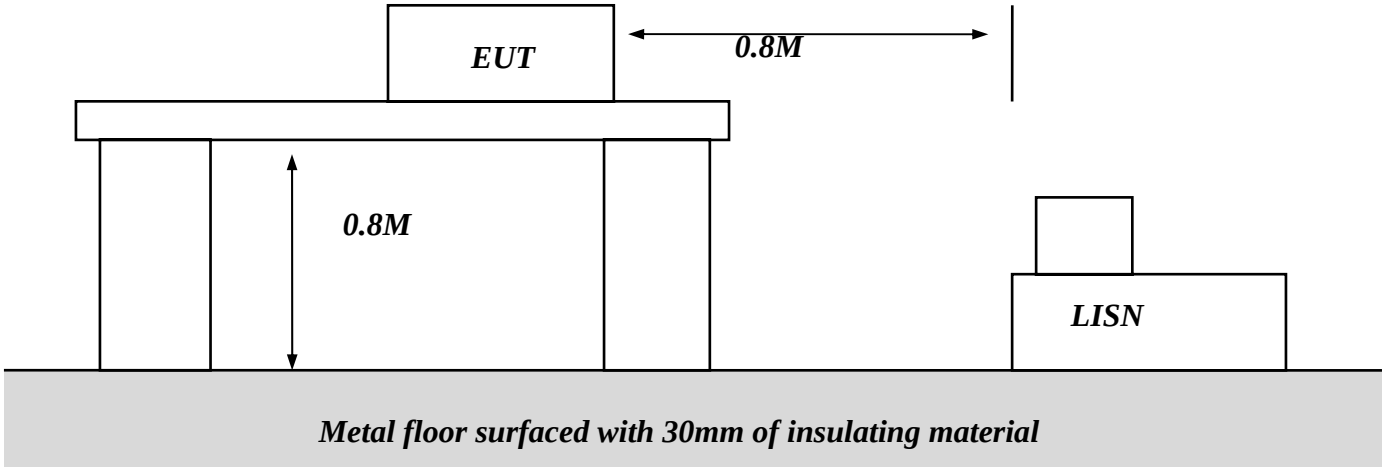

Appendix I- EUT Test SETUP
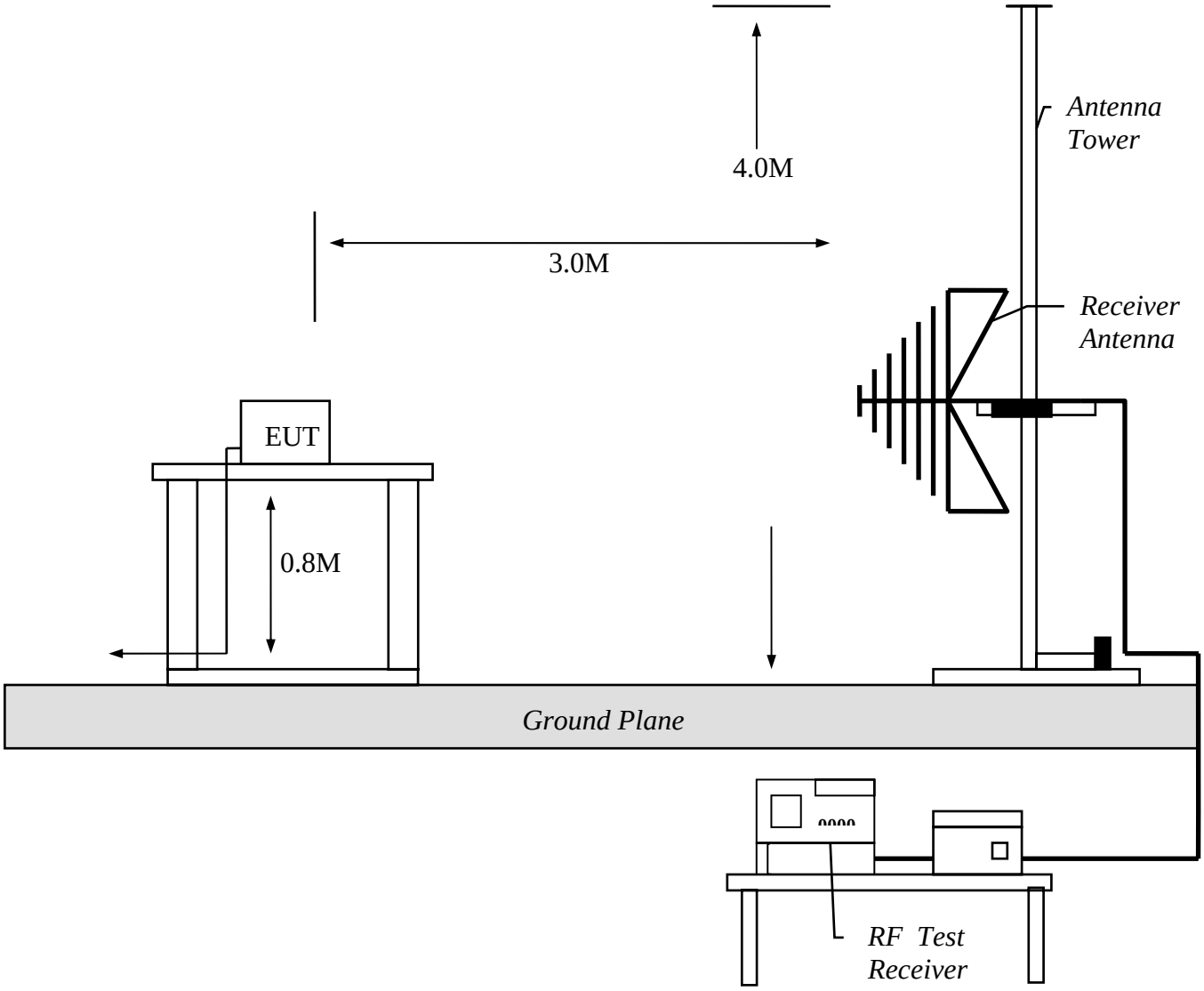
MEASUREMENT OF RADIATED EMISSION