4x4 Wave-2 802.11ac/a/n Mini PCIe WiFi Module

Full size form factor with 80+80MHz bandwidth support

Model: WLE1216V5-20

KEY FEATURES

- Qualcomm Atheros 'Cascade' QCA9984
-
- Heat sink allows free air operation
- IEEE 802.11ac compliant & backward compatible with 802.11a/n, up to 1733Mbps
- Multi-user MIMO (MU-MIMO)
- 4 spatial streams (4SS) at 80MHz
- 2 spatial streams (2SS) at 80+80MHz
- Mini PCI Express 2.0 interface
- Supports Spatial Multiplexing
  Low-Density Parity Check (LDPC) Codes
  Maximal Ratio Combining (MRC), Space Time Block Code (STBC)
- Supports IEEE 802.11d, e, h, i, j, k, r, u, v time stamp, w , and z standards
- Supports Dynamic Frequency Selection (DFS)
- Designed for High Bandwidth Enterprise Wireless Access Points

COMPEX SYSTEMS
PRELIMINARY

Specifications

Chipset	QCA9984
System Memory	256Kbit serial I²C bus EEPROM
Host Interface	Mini PCI Express 2.0 Standard
Operating Voltage	3.3V
Antenna Connector	4x U.FL
Frequency Range	5.180 ~ 5.825 GHz
Power Consumption	8.5W (Max)
Modulation Techniques	OFDM: BPSK, QPSK, 16-QAM, 64-QAM, 256-QAM
Supported Operating System	CompexWRT
Temperature Range	Operating: -20ºC to 70ºC Storage: -40ºC to 90ºC
Humidity	Operating: 5% to 95% (non-condensing) Storage: Max. 90% (non-condensing)
ESD Sensitivity	Class 1B
Dimensions (H x W x D)	50.8mm x 29.9mm x 12.9mm

Feature Guide

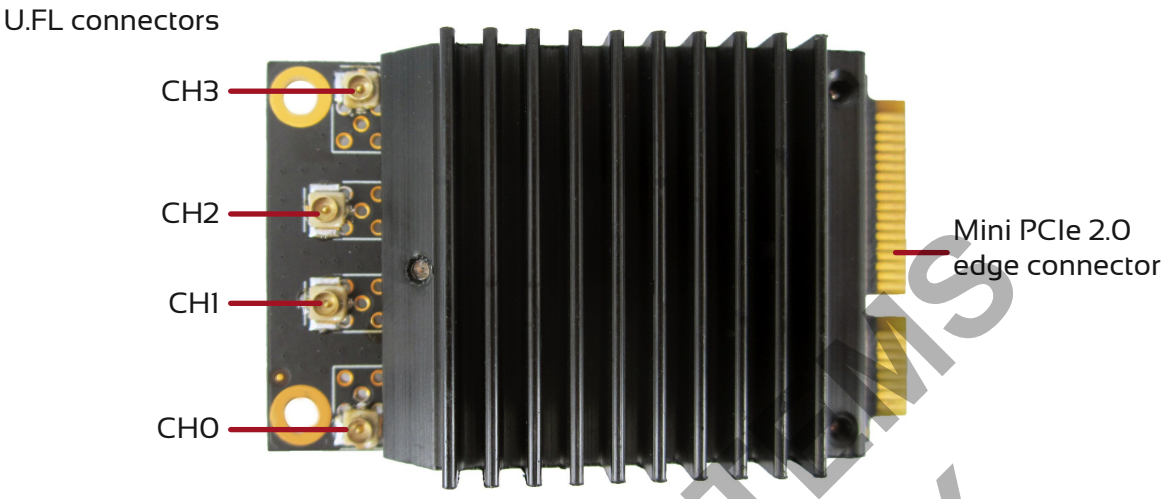

Mechanical Dimensions

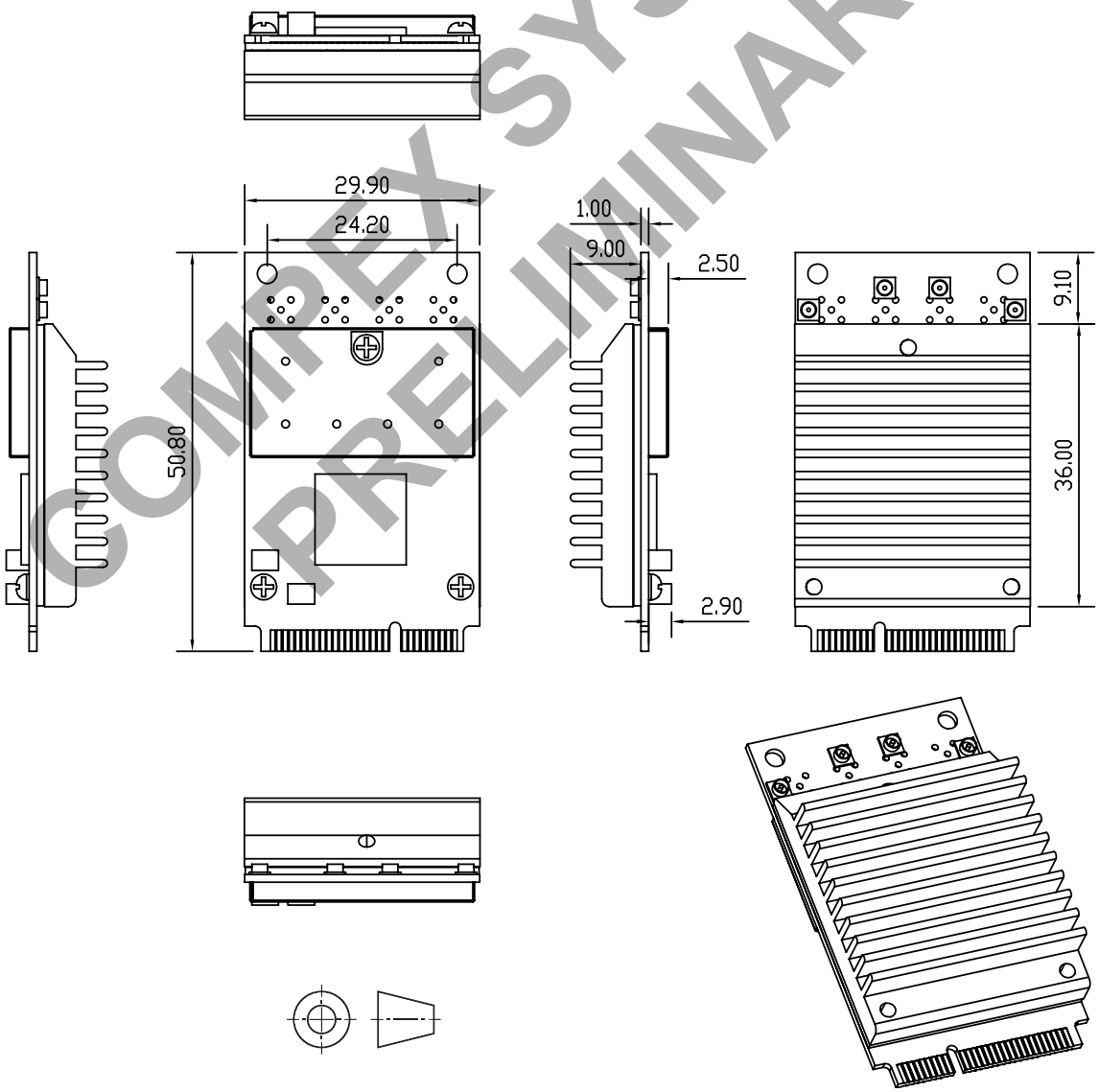

COMPEX SYSTEMS
PRELIMINARY

Copyright © Compex Systems. All rights reserved. COMPEX and the COMPEX logo, are registered trademarks of Compex Inc.
Atheros and other trademarks are properties of their respective owners. While every effort is made to ensure the information is accurate,
Compex does not accept liability for any errors or mistakes that may arise. All specifications are subject to change without notice.

Heat Dissipation Options

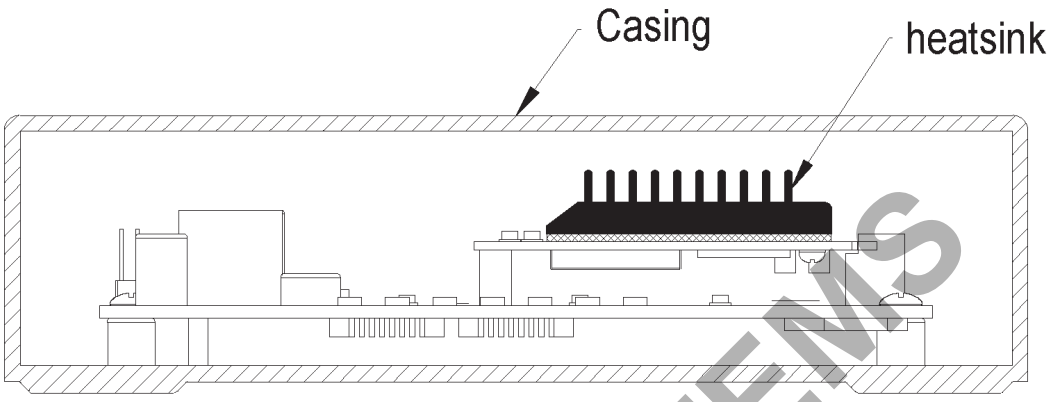

Using the pre-installed heatsink for heat dissipation

COMPEX SYSTEMS
PRELIMINARY

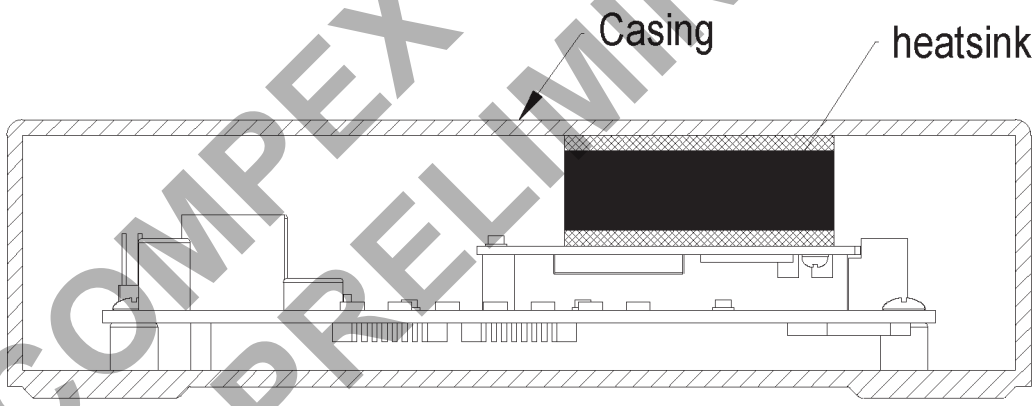

Using a custom design metal enclosure for heat dissipation

Copyright © Compex Systems. All rights reserved. COMPEX and the COMPEX logo, are registered trademarks of Compex Inc.
Atheros and other trademarks are properties of their respective owners. While every effort is made to ensure the information is accurate,
Compex does not accept liability for any errors or mistakes that may arise. All specifications are subject to change without notice.

Packaging Content

Item	Quantity
WLE1216V5-20 Wireless Module	1

Ordering Configuration

Item Code	Chipset	Form Factor	Card Information
WLE1216V5-20 7A00001.01	QCA9984	Standard size card	4x4 802.11ac/a/n 5GHz Wave 2

Packaging Information

Packaging Type	Dimensions	Weight	Dimensional Weight
Packing Box (50 units)	385 x 207 x 76 mm	1.514 kg	1.5 kg
Carton Box (5 packing boxes / 250 units)	422 x 410 x 240 mm	8.3 kg	9 kg

COMPEX SYSTEMS PRELIMINARY

Copyright © Compex Systems. All rights reserved. COMPEX and the COMPEX logo, are registered trademarks of Compex Inc. Atheros and other trademarks are properties of their respective owners. While every effort is made to ensure the information is accurate, Compex does not accept liability for any errors or mistakes that may arise. All specifications are subject to change without notice.

Compliance Information

FCC 15.105

For a Class B digital device or peripheral, the instructions furnished the user shall include the following or similar statement, placed in a prominent location in the text of the manual:

NOTE: This equipment has been tested and found to comply with the limits for a Class B digital device, pursuant to part 15 of the FCC Rules. These limits are designed to provide reasonable protection against harmful interference in a residential installation. This equipment generates, uses and can radiate radio frequency energy and, if not installed and used in accordance with the instructions, may cause harmful interference to radio communications. However, there is no guarantee that interference will not occur in a particular installation. If this equipment does cause harmful interference to radio or television reception, which can be determined by turning the equipment off and on, the user is encouraged to try to correct the interference by one or more of the following measures:

—Reorient or relocate the receiving antenna.

—Increase the separation between the equipment and receiver.

—Connect the equipment into an outlet on a circuit different from that to which the receiver is connected.

—Consult the dealer or an experienced radio/TV technician for help.

FCC 15.19

This device complies with Part 15 of the FCC Rules. Operation is subject to the following two conditions:

(1) This device may not cause harmful interference, and

(2) this device must accept any interference received, including interference that may cause undesired operation.

FCC 15.21

Any changes or modifications not expressly approved by the party responsible for compliance could void the user’s authority to operate the equipment.

FCC 15.203

This equipment complies with FCC RF radiation exposure limits set forth for an uncontrolled environment. This device and its antenna must not be co-located or operating in conjunction with any other antenna or transmitter.

RF exposure warning

The antennas used for this transmitter must be installed to provide a separation distance of at least 20 cm from all persons and must not be co-located or operating in conjunction with any other antenna or transmitter.

OEM Integration Instructions：

This device is intended only for OEM integrators under the following conditions：

The module is only limited to installation in mobile applications. The antenna must be installed such that 20 cm is maintained between the antenna and users，and the transmitter module may not be co-located with any other transmit or antenna. The module shall be only used with the integral antenna(s) that has been originally tested and certified with this module.

As long as 3 conditions above are met，further transmitter test will not be required. However，the OEM integrator is still responsible for testing their end-product for any additional compliance requirement with this module installed (for example, digital device emission, PC peripheral requirements，etc.)

IMPORTANT NOTE：

In the event that these conditions cannot be met (for example certain laptop configuration or co-location with another transmitter), then the FCC authorization for this module in combination with the host equipment is no longer considered valid and the FCC ID of the module cannot be used on the final product. In these and circumstance，the OEM integrator will be responsible for re-evaluating. The end product (including the transmitter) and obtaining a separate FCC authorization

The final end product must be labeled in a visible area with the following: “Contains Transmitter Module FCC ID: TK4WLE1216V520 or Contains FCC ID: TK4WLE1216V520”

The module will be restricted on these host (Detail information show as below)

Manufacturer: Compex Systems Pte Ltd

Product name：Access Point

Product Model Number：WPJXXX

This host is used for point-to-point access point (client terminal) that will provide network service through LAN port.

No.	Antenna	Manufacturer	Frequency Band (MHz)	Max Peak Gain (dBi)
Wi-Fi External Antenna List (5GHz 4*4 MIMO)				
1#	Omni Directional	Exceltek Electronics Technology Co., Ltd.	2400 ~ 2500	3.0
			5150 ~ 5850	5.0
2#	Omni Directional	Laird Smart Technology Co., Ltd.	2400 ~ 2500	2.2
			5150 ~ 5850	3.5
3#	Omni Directional	Linx Technologies	2400 ~ 2500	2.5
			5150 ~ 5850	4.6
4#	**Omni Directional**	**Kenbotong Technology Co., Ltd.**	**5150 ~ 5850**	**10.0**

Note 1: The device didn’t support beam-forming technology and Cyclic Delay Diversity (CDD) technology, and the transmit signals are uncorrected, so no add array gain to the band power and band PSD.

Note 2: We selected the max peak gain antenna 4# to perform all RF testing.