DFS MEASUREMENT REPORT

FCC ID:	TK4WLE3000HX
Applicant:	Compex Systems Pte Ltd
Product:	WiFi 6 (802.11ax) 4×4 MU-MIMO Dual Band Module
Model No.:	WLE3000HX
Brand Name:	COMPEX
FCC Classification:	Unlicensed National Information Infrastructure (NII)
FCC Rule Part(s):	Part 15 Subpart E (Section 15.407)
Type of Device:	Client device without radar detection
Result:	Complies
Received Date:	2022-10-14
Test Date:	2022-12-14 ~ 2022-12-17

Reviewed By: Jame Yuan

Approved By: Robin Wu

ACCREDITED
TESTING LABORATORY
CERTIFICATE #3628.01

The test results relate only to the samples tested.

This equipment has been shown to be capable of compliance with the applicable technical standards as indicated in the measurement report and was tested in accordance with the measurement procedures specified in KDB 905462. Test results reported herein relate only to the item(s) tested.

The test report shall not be reproduced except in full without the written approval of MRT Technology (Suzhou) Co., Ltd.

Revision History

Report No.	Version	Description	Issue Date	Note
2210RSU016-U4	Rev. 01	Initial Report	2022-12-30	Invalid
2210RSU016-U4	Rev. 02	Revised some information	2023-01-06	Valid

CONTENTS

Description Page

1. General Information 4

1.1. Applicant 4

1.2. Manufacturer 4

1.3. Testing Facility 4

1.4. Product Information 5

1.5. Radio Specification under Test 5

1.6. DFS Band Carrier Frequencies Operation 6

1.7. Test Mode 6

1.8. Antenna Details 7

1.9. Test Environment Condition 7

2. DFS Detection Thresholds and Radar Test Waveforms 8

2.1. Applicability 8

2.2. DFS Devices Requirements 9

2.3. DFS Detection Threshold Values 11

2.4. Parameters of DFS Test Signals 12

2.5. Conducted Test Setup 15

3. Measuring Instrument 16

4. Test Result 17

4.1. Summary 17

4.2. Radar Waveform Calibration Measurement 18

4.2.1. Test Setup 18

4.2.2. Test Procedure 18

4.2.3. Test Result 18

4.3. Channel Loading Measurement 19

4.3.1. Test Limit 19

4.3.2. Test Result 19

4.4. In-Service Monitoring Measurement 20

4.4.1. Test Limit 20

4.4.2. Test Procedure 20

4.4.3. Test Result 21

Appendix A - Test Result 22

A.1 Radar Waveform Calibration Test Result 22

A.2 Channel Loading Test Result 23

A.3 In-Service Monitoring Test Result 24

Appendix B- Test Setup Photograph 26

Appendix C -EUT Photograph 27

1. General Information

1.1. Applicant

Compex Systems Pte Ltd

No:9 Harrison Road, Harrison Industrial Building, #05-01, Singapore 369651

1.2. Manufacturer

Compex Systems Pte Ltd

No:9 Harrison Road, Harrison Industrial Building, #05-01, Singapore 369651

1.3. Testing Facility

☒	**Test Site – MRT Suzhou Laboratory**				
	Laboratory Location (Suzhou - Wuzhong) D8 Building, No.2 Tian'edang Rd., Wuzhong Economic Development Zone, Suzhou, China **Laboratory Location (Suzhou - SIP)** 4b Building, Liando U Valley, No.200 Xingpu Rd., Shengpu Town, Suzhou Industrial Park, China				
	Laboratory Accreditations				
	A2LA: 3628.01		CNAS: L10551		
	FCC: CN1166		ISED: CN0001		
	VCCI:	☐R-20025	☐G-20034	☐C-20020	☐T-20020
		☐R-20141	☐G-20134	☐C-20103	☐T-20104
☐	**Test Site – MRT Shenzhen Laboratory**				
	Laboratory Location (Shenzhen) 1G, Building A, Junxiangda Building, Zhongshanyuan Road West, Nanshan District, Shenzhen, China				
	Laboratory Accreditations				
	A2LA: 3628.02		CNAS: L10551		
	FCC: CN1284		ISED: CN0105		
☐	**Test Site – MRT Taiwan Laboratory**				
	Laboratory Location (Taiwan) No. 38, Fuxing 2nd Rd., Guishan Dist., Taoyuan City 333, Taiwan (R.O.C.)				
	Laboratory Accreditations				
	TAF: L3261-190725				
	FCC: 291082, TW3261		ISED: TW3261		

1.4. Product Information

Product Name	WiFi 6 (802.11ax) 4×4 MU-MIMO Dual Band Module
Model No.	WLE3000HX
Serial Model No.	WLE3000HX-I
Serial No.	110041172
Wi-Fi Specification	802.11a/b/g/n/ac/ax
Antenna Information	Refer to Section 1.8
Operating Voltage	3.3Vdc
Operating Temperature	-20 ~ 70 °C
Note: 1. The information of EUT was provided by the manufacturer, and the accuracy of the information shall be the responsibility of the manufacturer. 2. Model Difference: Marketing purpose only.	

1.5. Radio Specification under Test

Frequency Range	802.11a/n-HT20/ac-VHT20/ax-HE20: 5260~5320MHz, 5500~5720MHz 802.11n-HT40/ac-VHT40/ax-HE40: 5270~5310MHz, 5510~5710MHz 802.11ac-VHT80/ax-HE80: 5290MHz, 5530MHz, 5610MHz, 5690MHz 802.11ac-VHT160/ax-HE160: 5250MHz, 5570MHz
Type of Modulation	802.11a/n/ac: OFDM 802.11ax: OFDMA
Data Rate	802.11a: 6/9/12/18/24/36/48/54Mbps 802.11n: up to 600Mbps 802.11ac: up to 3466.7Mbps 802.11ax: up to 4804Mbps
Uniform Spreading	For the 5250-5350MHz,5470-5725 MHz bands, the Master device provides, on aggregate, uniform loading of the spectrum across all devices by selecting an operating channel among the available channels using a random algorithm.

1.6. DFS Band Carrier Frequencies Operation

802.11a/n-HT20/ac-VHT20/ax-HE20

Channel	Frequency	Channel	Frequency	Channel	Frequency
52	5260 MHz	56	5280 MHz	60	5300 MHz
64	5320 MHz	100	5500 MHz	104	5520 MHz
108	5540 MHz	112	5560 MHz	116	5580 MHz
120	5600 MHz	124	5620 MHz	128	5640 MHz
132	5660 MHz	136	5680 MHz	140	5700 MHz
144	5720 MHz	--	--	--	--

802.11n-HT40/ac-VHT40/ax-HE40

Channel	Frequency	Channel	Frequency	Channel	Frequency
54	5270 MHz	62	5310 MHz	102	5510 MHz
110	5550 MHz	118	5590 MHz	126	5630 MHz
134	5670 MHz	142	5710 MHz	--	--

802.11ac-VHT80/ax-HE80

Channel	Frequency	Channel	Frequency	Channel	Frequency
58	5290 MHz	106	5530 MHz	122	5610 MHz
138	5690 MHz	--	--	--	--

802.11ac-VHT160/ax-HE160

Channel	Frequency	Channel	Frequency	Channel	Frequency
50	5250 MHz	114	5570 MHz	--	--

1.7. Test Mode

Test Mode	Mode 1: Communication with the Access Point

1.8. Antenna Details

Antenna No.	Model No.	Polarization	5GHz Max. Peak Gain (dBi)	CDD Directional Gain (dBi)	
				For Power	For PSD
1#	FXP524.D.07.C.001	Omni	6.36	6.36	12.38
2#	7 SIGNAL	Omni	3.42	3.42	9.44
3#	02 S00029A	Omni	3.55	3.55	9.57
4#	Flatant-4x4-dualband-6dBi	Omni	7.00	7.00	13.02
5#	SAA04-22008A	Omni	7.00	7.00	13.02
6#	ALX18P-222AA1-01	Omni	5.20	5.20	11.22
7#	RFDPA171300SBLB801	Omni	4.29	4.29	10.31

Note

1. The EUT supports Cyclic Delay Diversity (CDD) mode, and CDD signals are correlated.
   For CDD transmissions, directional gain is calculated as follows, N_{ANT} = 4, N_{SS} = 1. If all antennas have the same gain, G_{ANT}, Directional gain = G_{ANT} + Array Gain, where Array Gain is as follows.
   • For power spectral density (PSD) measurements on all devices, Array Gain = 10 log (N_{ANT}/ N_{SS}) dB = 6.02;
   • For power measurements on IEEE 802.11 devices, Array Gain = 0 dB for NANT ≤ 4;
2. We select the higher peak gain Ant 4# to perform testing, other antennas (Antenna 1#, Antenna 2#, Antenna 3#, Antenna 5#) only evaluate Radiated Spurious Emission and Radiated Restricted Band Edge for worse case mode.
3. The gain of antenna #6 and antenna #7 is less than the maximum gain of the same type. So there's no evaluation of additional tests.

1.9. Test Environment Condition

Ambient Temperature	15 ~ 35°C
Relative Humidity	20 ~ 75%RH

2. DFS Detection Thresholds and Radar Test Waveforms

2.1. Applicability

The following table from FCCKDB 905462 D02 UNII DFS Compliance Procedures New Rulesv02 lists the applicable requirements for the DFS testing.

Requirement	Operational Mode		
	Master	Client without Radar Detection	Client with Radar Detection
Non-Occupancy Period	Yes	Not required	Yes
DFS Detection Threshold	Yes	Not required	Yes
Channel Availability Check Time	Yes	Not required	Not required
U-NII Detection Bandwidth	Yes	Not required	Yes

Table3-1: Applicability of DFS Requirements Prior to Use of a Channel

Requirement	Operational Mode	
	Master Device orClient with Radar Detection	Client without Radar Detection
DFS Detection Threshold	Yes	Not required
Channel Closing Transmission Time	Yes	Yes
Channel Move Time	Yes	Yes
U-NII Detection Bandwidth	Yes	Not required

Additional requirements for devices with multiple bandwidth modes	Master Device or Client with Radar Detection	Client without Radar Detection
U-NII Detection Bandwidth and Statistical Performance Check	All BW modes must be tested	Not required
Channel Move Time and Channel Closing Transmission Time	Test using widest BW mode available	Test using the widest BW mode available for the link
All other tests	Any single BW mode	Not required
Note: Frequencies selected for statistical performance check should include several frequencies within the radar detection bandwidth and frequencies near the edge of the radar detection bandwidth. For 802.11 devices it is suggested to select frequencies in each of the bonded 20 MHz channels and the channel center frequency.		

Table 3-2: Applicability of DFS Requirements during normal operation

2.2. DFS Devices Requirements

Per FCC KDB 905462 D02 UNII DFS Compliance Procedures New Rules v02 the following are the requirements for Client Devices:

a) A Client Device will not transmit before having received appropriate control signals from a Master Device.

b) A Client Device will stop all its transmissions whenever instructed by a Master Device to which it is associated and will meet the Channel Move Time and Channel Closing transmission time requirements. The Client Device will not resume any transmissions until it has again received control signals from a Master Device.

c) If a Client Device is performing In-Service Monitoring and detects a Radar Waveform above the DFS Detection Threshold, it will inform the Master Device. This is equivalent to the Master Device detecting the Radar Waveform.

d) Irrespective of Client Device or Master Device detection the Channel Move Time and Channel Closing Transmission Time requirements remain the same.

e) The client test frequency must be monitored to ensure no transmission of any type has occurred for 30 minutes. Note: If the client moves with the master, the device is considered compliant if nothing appears in the client non-occupancy period test. For devices that shut down (rather than moving channels), no beacons should appear.

Channel Move Time and Channel Closing Transmission Time requirements are listed in the following table.

Parameter	Value
Non-occupancy period	Minimum 30 minutes
Channel Availability Check Time	60 seconds
Channel Move Time	10 seconds See Note 1.
Channel Closing Transmission Time	200 milliseconds + an aggregate of 60 milliseconds over remaining 10 second period. See Notes 1 and 2.
U-NII Detection Bandwidth	Minimum 100% of the U-NII 99% transmission power bandwidth. See Note 3.
Note 1: Channel Move Time and the Channel Closing Transmission Time should be performed with Radar Type 0. The measurement timing begins at the end of the Radar Type 0 burst. Note 2: The Channel Closing Transmission Time is comprised of 200 milliseconds starting at the beginning of the Channel Move Time plus any additional intermittent control signals required to facilitate a Channel move (an aggregate of 60 milliseconds) during the remainder of the 10 second period. The aggregate duration of control signals will not count quiet periods in between transmissions. Note 3: During the U-NII Detection Bandwidth detection test, radar type 0 should be used. For each frequency step the minimum percentage of detection is 90 percent. Measurements are performed with no data traffic.	

Table 3-3: DFS Response Requirements

2.3. DFS Detection Threshold Values

The DFS detection thresholds are defined for Master devices and Client Devices with In-service monitoring.

These detection thresholds are listed in the following table.

Maximum Transmit Power	**Value** **(See Notes 1, 2, and 3)**
EIRP ≥ 200 milliwatt	-64 dBm
EIRP < 200 milliwatt and power spectral density < 10 dBm/MHz	-62 dBm
EIRP < 200 milliwatt that do not meet the power spectral density requirement	-64 dBm
Note 1: This is the level at the input of the receiver assuming a 0 dBi receive antenna. Note 2: Throughout these test procedures an additional 1 dB has been added to the amplitude of the test transmission waveforms to account for variations in measurement equipment. This will ensure that the test signal is at or above the detection threshold level to trigger a DFS response. Note3: EIRP is based on the highest antenna gain. For MIMO devices refer to KDB Publication 662911 D01.	

Table 3-4: Detection Thresholds for Master Devices and Client Devices with Radar Detection

2.4. Parameters of DFS Test Signals

This section provides the parameters for required test waveforms, minimum percentage of successful detections, and the minimum number of trials that must be used for determining DFS conformance. Step intervals of 0.1 microsecond for Pulse Width, 1 microsecond for PRI, 1 MHz for chirp width and 1 for the number of pulses will be utilized for the random determination of specific test waveforms.

Short Pulse Radar Test Waveforms

Radar Type	Pulse Width (μsec)	PRI (μsec)	Number of Pulses	Minimum Percentage of Successful Detection	Minimum Number of Trials
0	1	1428	18	See Note 1	See Note 1
1	1	Test A: 15 unique PRI values randomly selected from the list of 23 PRI values in Table 3-6	$\text{Roundup}\left\{\left(\frac{1}{360}\right)\cdot\left(\frac{19\cdot 10^6}{\text{PRI}_{\text{usec}}}\right)\right\}$	60%	30
		Test B: 15 unique PRI values randomly selected within the range of 518-3066 μsec, with a minimum increment of 1 μsec, excluding PRI values selected in Test A			
2	1-5	150-230	23-29	60%	30
3	6-10	200-500	16-18	60%	30
4	11-20	200-500	12-16	60%	30
Aggregate (Radar Types 1-4)				80%	120
Note 1: Short Pulse Radar Type 0 should be used for the detection bandwidth test, channel move time, and channel closing time tests.					

Table 3-5: Parameters for Short Pulse Radar Waveforms

A minimum of 30 unique waveforms are required for each of the Short Pulse Radar Types 2 through 4. If more than 30 waveforms are used for Short Pulse Radar Types 2 through 4, then each additional waveform must also be unique and not repeated from the previous waveforms.

Pulse Repetition Frequency Number	Pulse Repetition Frequency (Pulses Per Second)	Pulse Repetition Interval (Microseconds)
1	1930.5	518
2	1858.7	538
3	1792.1	558
4	1730.1	578
5	1672.2	598
6	1618.1	618
7	1567.4	638
8	1519.8	658
9	1474.9	678
10	1432.7	698
11	1392.8	718
12	1355	738
13	1319.3	758
14	1285.3	778
15	1253.1	798
16	1222.5	818
17	1193.3	838
18	1165.6	858
19	1139	878
20	1113.6	898
21	1089.3	918
22	1066.1	938
23	326.2	3066

Table 3-6: Pulse Repetition Intervals Values for Test A

Long Pulse Radar Test Waveform

Radar Type	Pulse Width (μsec)	Chirp Width (MHz)	PRI (μsec)	Number of Pulses per Burst	Number of Bursts	Minimum Percentage of Successful Detection	Minimum Number of Trials
5	50 - 100	5 - 20	1000 - 2000	1 - 3	8 - 20	80%	30

Table 3-7: Parameters for Long Pulse Radar Waveforms

The parameters for this waveform are randomly chosen. Thirty unique waveforms are required for the Long Pulse Radar Type waveforms. If more than 30 waveforms are used for the Long Pulse Radar Type waveforms, then each additional waveform must also be unique and not repeated from the previous waveforms.

Frequency Hopping Radar Test Waveform

Radar Type	Pulse Width (μsec)	PRI (μsec)	Pulses Per Hop	Hopping Rate (kHz)	Hopping Sequence Length (msec)	Minimum Percentage of Successful Detection	Minimum Number of Trials
6	1	333	9	0.333	300	70%	30

Table 3-8: Parameters for Frequency Hopping Radar Waveforms

For the Frequency Hopping Radar Type, the same Burst parameters are used for each waveform. The hopping sequence is different for each waveform and a 100-length segment is selected from the hopping sequence defined by the following algorithm:

The first frequency in a hopping sequence is selected randomly from the group of 475 integer frequencies from 5250 – 5724MHz. Next, the frequency that was just chosen is removed from the group and a frequency is randomly selected from the remaining 474 frequencies in the group. This process continues until all 475 frequencies are chosen for the set. For selection of a random frequency, the frequencies remaining within the group are always treated as equally likely.

2.5. Conducted Test Setup

The FCC KDB 905462 D02 UNII DFS Compliance Procedures New Rules v01 describes a radiated test setup and a conducted test setup. The conducted test setup was used for this testing. Figure 3-1 shows the typical test setup.

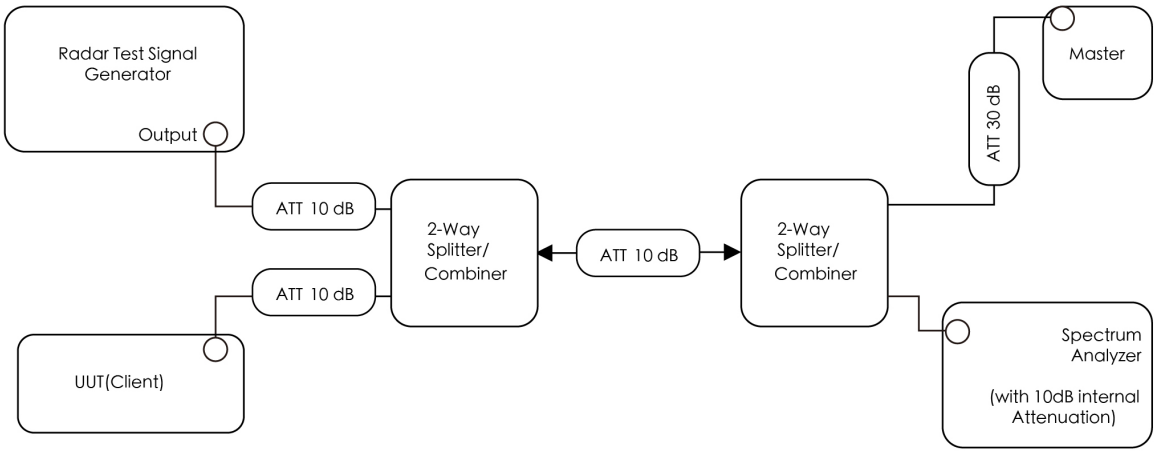

Figure 3-1: Conducted Test Setup where UUT is a Client and Radar Test Waveforms are injected into the Masters

3. Measuring Instrument

Dynamic Frequency Selection (WZ-SR4)

Instrument	Manufacturer	Type No.	Asset No.	Cali. Interval	Cali. Due Date
EXA Signal Analyzer	Agilent	N9020A	MRTSUE06106	1 year	2023-04-06
EXA Signal Analyzer	Keysight	N9010B	MRTSUE06607	1 year	2022-12-29
Signal Analyzer	R&S	FSV40	MRTSUE06218	1 year	2023-09-06
Vector Signal Generator	Agilent	E4438C	MRTSUE06026	1 year	2023-07-13
Vector Signal Generator	R&S	SMBV100A	MRTSUE06279	1 year	2023-04-06
Thermal Hygrometer	testo	608-H1	MRTSUE06222	1 year	2023-10-11

Access Point Information

Instrument	Manufacturer	Type No.	FCC ID
Access Point	NETGEAR	RAXE500	PY320300508

Software	Version	Manufacturer	Function
DFS Tool	V 6.9.2	Agilent	DFS Test Software
Pulse Sequencer	V 2.0	R&S	DFS Test Software
Signal Studio	V2.2.0.0	Keysight	DFS Test Software

4. Test Result

4.1. Summary

Parameter	Test Result	Reference
Channel Move Time, Channel Closing Transmission Time and Non-Occupancy Period Measurement	Pass	Section 4.4

4.2. Radar Waveform Calibration Measurement

4.2.1. Test Setup

The conducted test setup was used for this calibration testing. Figure 3-2 shows the typical test setup.

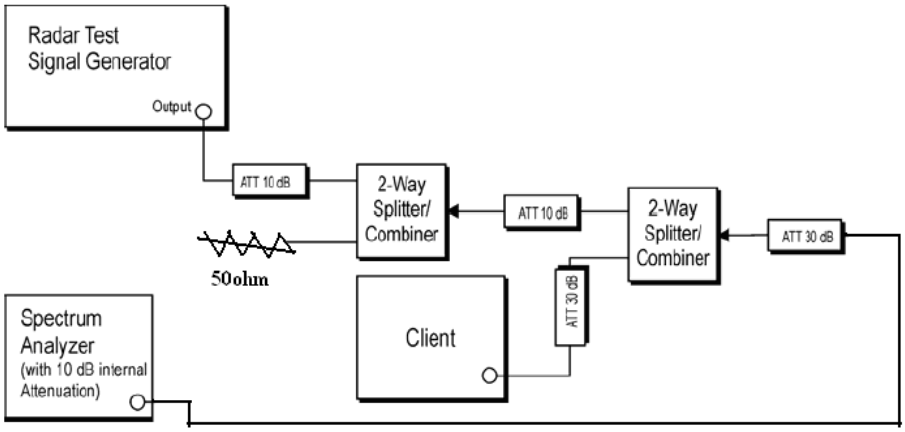

Figure 3-2: Conducted Test Setup

4.2.2. Test Procedure

The Interference Radar Detection Threshold Level is (-64dBm) + (0) [dBi]+ 1 dB= -63 dBm that had been taken into account the output power range and antenna gain. The above equipment setup was used to calibrate the conducted Radar Waveform. A vector signal generator was utilized to establish the test signal level for each radar type. During this process there were replace 50ohm terminal form Master and Client device and no transmissions by either the Master or Client Device. The spectrum analyzer was switched to the zero span (Time Domain) at the frequency of the Radar Waveform generator. Peak detection was used. The spectrum analyzer resolution bandwidth (RBW) and video bandwidth (VBW) were set to at least 3MHz. The vector signal generator amplitude was set so that the power level measured at the spectrum analyzer was(-64dBm) + (0)[dBi]+ 1 dB= -63dBm. Capture the spectrum analyzer plots on short pulse radar types, long pulse radar type and hopping radar waveform.

4.2.3. Test Result

Refer to Appendix A.1

4.3. Channel Loading Measurement

4.3.1. Test Limit

A minimum channel loading of approximately 17% or greater.

4.3.2. Test Result

Refer to Appendix A.2

4.4. In-Service Monitoring Measurement

4.4.1. Test Limit

The EUT has In-Service Monitoring function to continuously monitor the radar signals. If the radar is detected, must leave the channel (Shutdown). The Channel Move Time to cease all transmissions on the current channel upon detection of a Radar Waveform above the DFS Detection Threshold within 10 sec. The total duration of Channel Closing Transmission Time is 260ms, consisting of data signals and the aggregate of control signals, by a U-NII device during the Channel Move Time. The Non-Occupancy Period time is 30minute during which a Channel will not be utilized after a Radar Waveform is detected on that Channel.

4.4.2. Test Procedure

1.The test should be performed with Radar Type 0. The measurement timing begins at the end of the Radar Type 0.

2. When the radar burst with a level equal to the DFS Detection Threshold + 1dB is generated on the Operating Channel of the U-NII device. A U-NII device operating as a Master Device will associate with the Client Device at Channel. Stream the MPEG test file from the Master Device to the Client Device on the selected Channel for the entire period of the test. At time T0 the Radar Waveform generator sends a Burst of pulses for each of the radar types at Detection Threshold + 1dB.

2. Observe the transmissions of the EUT at the end of the radar Burst on the Operating Channel. Measurand record the transmissions from the EUT during the observation time (Channel Move Time).

3. Measurement of the aggregate duration of the Channel Closing Transmission Time method. with the spectrum analyzer set to zero span tuned to the center frequency of the EUT operating channel at the radar simulated frequency, peak detection, and max hold, the dwell time per bin is given by: Dwell(1.5ms)= S (12 sec) / B (8000); where Dwell is the dwell time per spectrum analyzer sampling bin, S is the sweep time and B is the number of spectrum analyzer sampling bins. An upper bound of the aggregate duration of the intermittent control signals of Channel Closing Transmission Time is calculated by: 80MHz: C = N X Dwell; where C is the Closing Time, N is the number of spectrum analyzer sampling bins showing a U-NII transmission and Dwell is the dwell time per bin.

4. Measure the UUT for more than 30 minutes following the channel close/move time to verify that the UT does not resume any transmissions on this Channel.

4.4.3. Test Result

Refer to Appendix A.3

Appendix A - Test Result

A.1 Radar Waveform Calibration Test Result

Product	WiFi 6 (802.11ax) 4×4 MU-MIMO Dual Band Module	Test Site	WZ-SR4
Test Engineer	Jack Lan	Test Date	2022-12-14
Test Item	Radar Waveform Calibration		

Radar #0	
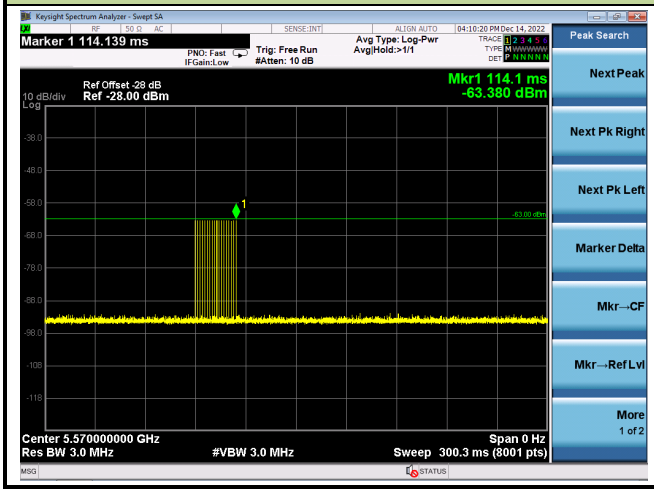	

A.2 Channel Loading Test Result

Product	WiFi 6 (802.11ax) 4×4 MU-MIMO Dual Band Module	Test Site	WZ-SR4
Test Engineer	Jack Lan	Test Date	2022-12-17 ~ 2022-12-18
Test Item	Channel Loading		

802.11ax-HE160 (5250MHz)

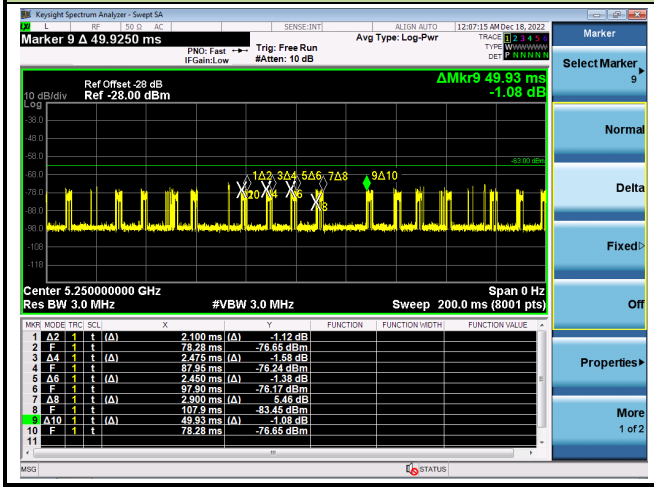

802.11ax-HE160 (5570MHz)

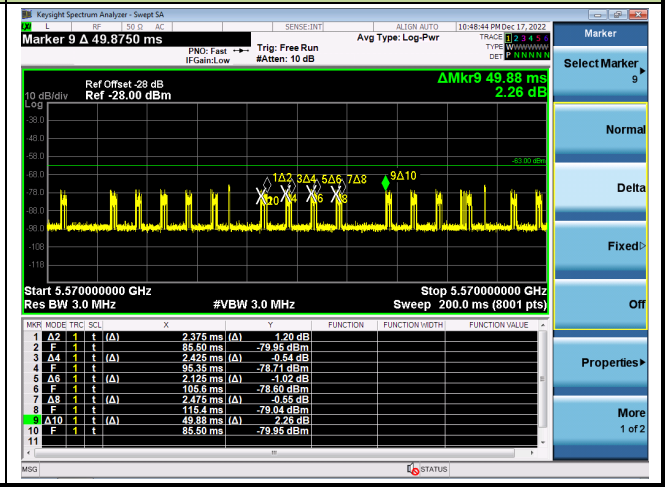

Test Mode	Test Frequency	Packet ratio	Requirement ratio	Test Result
802.11ax-HE160	5250 MHz	19.88%	≥ 17%	Pass
802.11ax-HE160	5570 MHz	18.85%	≥ 17%	Pass

Note: System testing was performed with the designated iperf test file. This file is used by IP and Frame based systems for loading the test channel during the In-service compliance testing of the U-NII device. Packet ratio = Time On/ (Time On + Off Time).

A.3 In-Service Monitoring Test Result

Product	WiFi 6 (802.11ax) 4×4 MU-MIMO Dual Band Module	Test Site	WZ-SR4
Test Engineer	Jack Lan	Test Date	2022-12-17 ~ 2022-12-18
Test Item	Channel Move Time and Channel Closing Transmission Time (802.11ax-HE160 mode - 5250MHz)		

Channel Move Time and Channel Closing Transmission Time

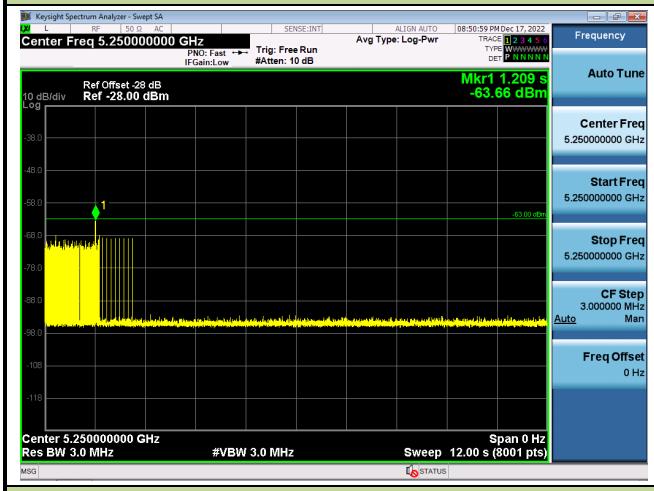

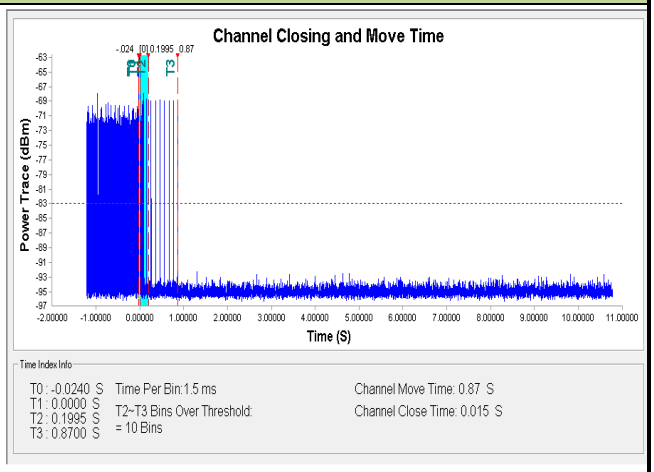

Non-Occupancy Period

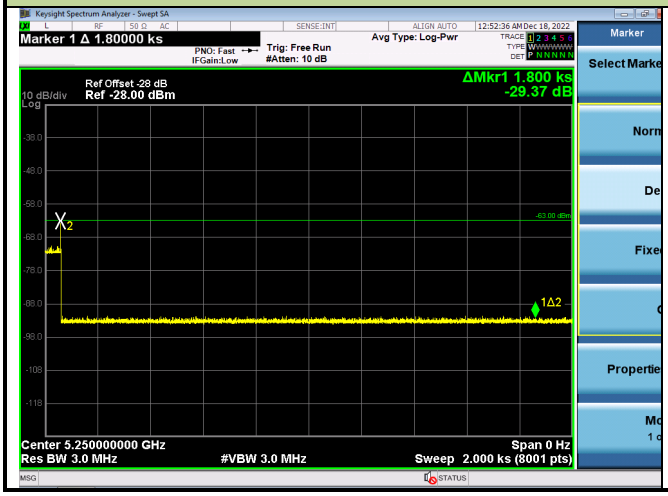

Parameter	Test Result	Limit
Channel Move Time (s)	0.87s	<10s
Channel Closing Transmission Time (ms) (Note)	15ms	< 60ms
Non-Occupancy Period (min)	≥ 30min	≥ 30 min
Note: The Channel Closing Transmission Time is comprised of 200 milliseconds starting at the beginning of the Channel Move Time plus any additional intermittent control signals required to facilitate a Channel move (an aggregate of 60 milliseconds) during the remainder of the 10 seconds period. The aggregate duration of control signals will not count quiet periods in between transmissions.		

Product	WiFi 6 (802.11ax) 4×4 MU-MIMO Dual Band Module	Test Site	WZ-SR4
Test Engineer	Jack Lan	Test Date	2022-12-17
Test Item	Channel Move Time and Channel Closing Transmission Time (802.11ax-HE160 mode - 5570MHz)		

Channel Move Time and Channel Closing Transmission Time

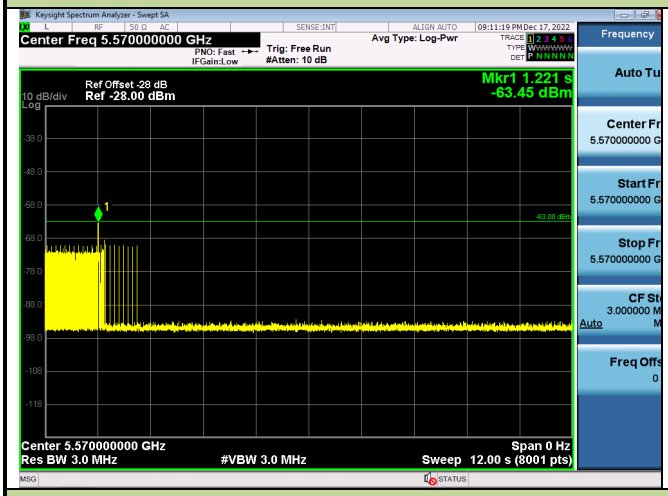

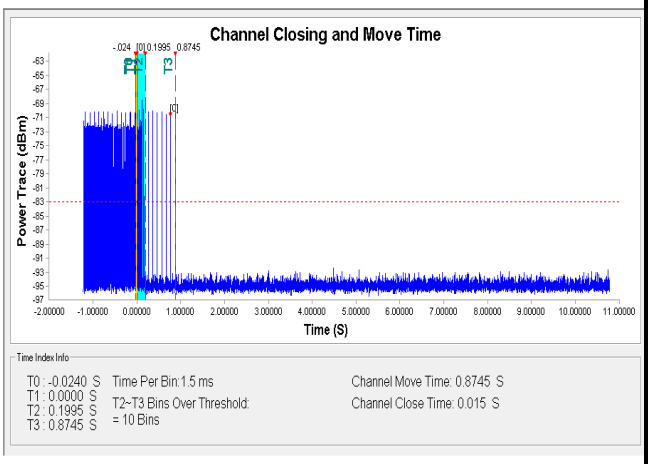

Non-Occupancy Period

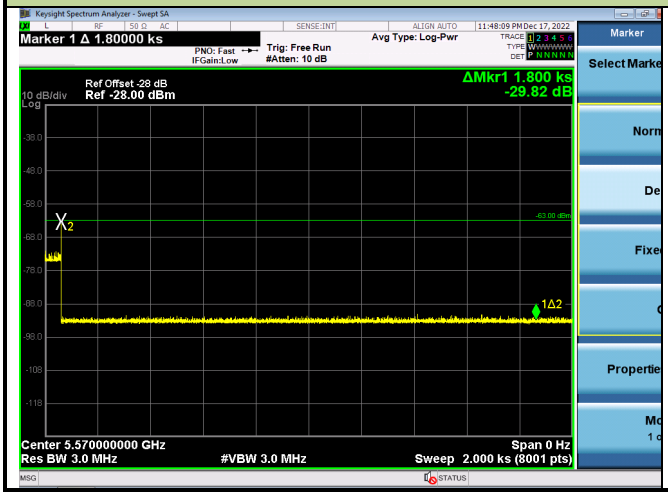

Parameter	Test Result	Limit
Channel Move Time (s)	0.8745s	<10s
Channel Closing Transmission Time (ms) (Note)	15ms	< 60ms
Non-Occupancy Period (min)	≥ 30min	≥ 30 min
Note: The Channel Closing Transmission Time is comprised of 200 milliseconds starting at the beginning of the Channel Move Time plus any additional intermittent control signals required to facilitate a Channel move (an aggregate of 60 milliseconds) during the remainder of the 10 seconds period. The aggregate duration of control signals will not count quiet periods in between transmissions.		

Appendix B- Test Setup Photograph

Refer to “2210RSU016-UT” file.

Appendix C -EUT Photograph

Refer to “2210RSU016-UE” file.

The End