Coverage.
Performance.
Smart.

OmniMax High Performance Antenna

ET04VSABA

Airgain External Antenna

Engineering Data Sheet

AIRGAIN INC.
3611 Valley Centre Drive,
Suite 150 San Diego, CA
92130 USA
Tel: +1 760 579 0200
Fax: +1 760 579 0892
Information:
info@airgain.com
Sales: sales@airgain.com
Support:
support@airgain.com

Revision History (Required)

Revision	Date	Note
3852C-02-00-001-1 Rev. 1.0	April 28,2022	Preliminary Datasheet 1.0
3852C-02-00-001-1 Rev. 1.1	October 08,2022	Added Peak gain and Radiation Pattern
3852C-02-00-001-1 Rev. 1.2	November 08,2022	Updated description

Disclaimers

The information in this document is provided in connection with Airgain Antenna products and is proprietary and confidential. Airgain may make changes at any time, without notice.

Contents

1. Airgain ET04VSABA External Antenna 4
2. Features 4
3. Specifications and Interface 5
4. Radiation Patterns 5
5. Dimensions 9
6. Mounting Guidelines 10

Figures

Figure 1: Model ET04VSABA Embedded Antenna 4
Figure 2: Model ET04VSABA Measurement axes 5
Figure 3: Model ET04VSABA Measured Radiation Patterns at 2440 to 6500 MHz 6
Figure 4: Model ET04VSABA Measured 3D Radiation Patterns at 2440 MHz 7
Figure 5: Model ET04VSABA Measured 3D Radiation Patterns at 5500 MHz 7
Figure 6: Model ET04VSABA Measured 3D Radiation Patterns at 6500 MHz 8
Figure 7: Model Dimensions 9
Figure 8: The installation mode that can be implemented 10
Figure 9: The installation method cannot be implemented 10

1. Airgain ET04VSABA External Antenna

The Model ET04VSABA dipole antenna is a 2.4G/5G/6G externally mounted antenna providing high efficiency for IoT and M2M applications for indoor cellular modules, modems, and gateways.

2. Features

The ET04VSABA dipole antenna is defined by the following features:

- External Dipole antenna
- High efficiency
- Rotated 90 degrees on the base hinge

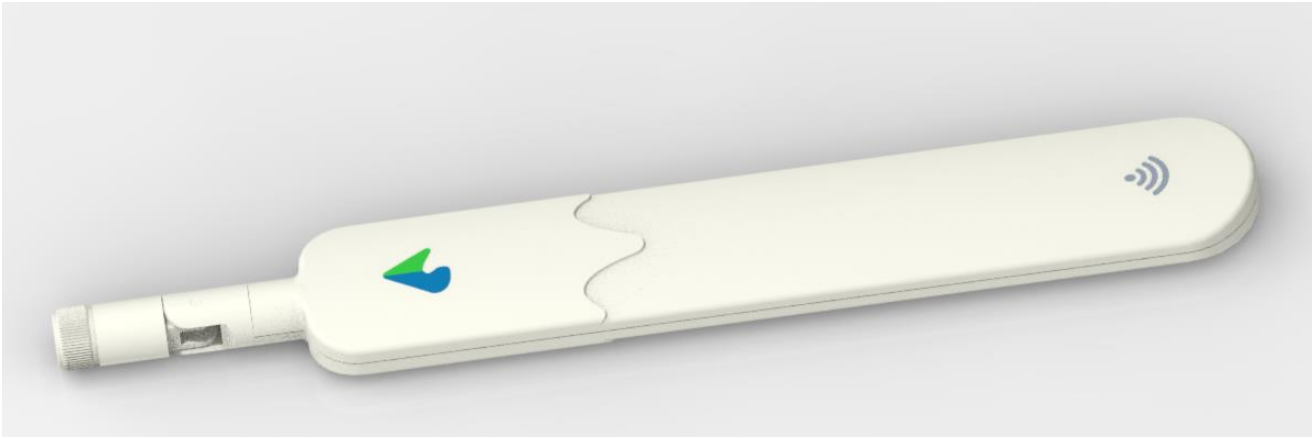

Figure 1: Model ET04VSABA Embedded Antenna

3. Specifications and Interface

Frequency range	2.4-2.5 GHz, 5.1-7.125GHz
Peak gain	4.0 dBi@2440MHz, 5.8 dBi@5500MHz, 7.1 dBi@6500MHz,
Feed impedance	50 ohms
Power handling	30 dBm
Interface	RP-SMA
Antenna dimensions	252mm(L) x 35mm(W) x 13mm(H)
Weight	TBD g
Temperature range	-30 ˚C --- +75 ˚C
Cover material(color)	Plastic(White)
Humidity range	5%~95%

4. Radiation Patterns

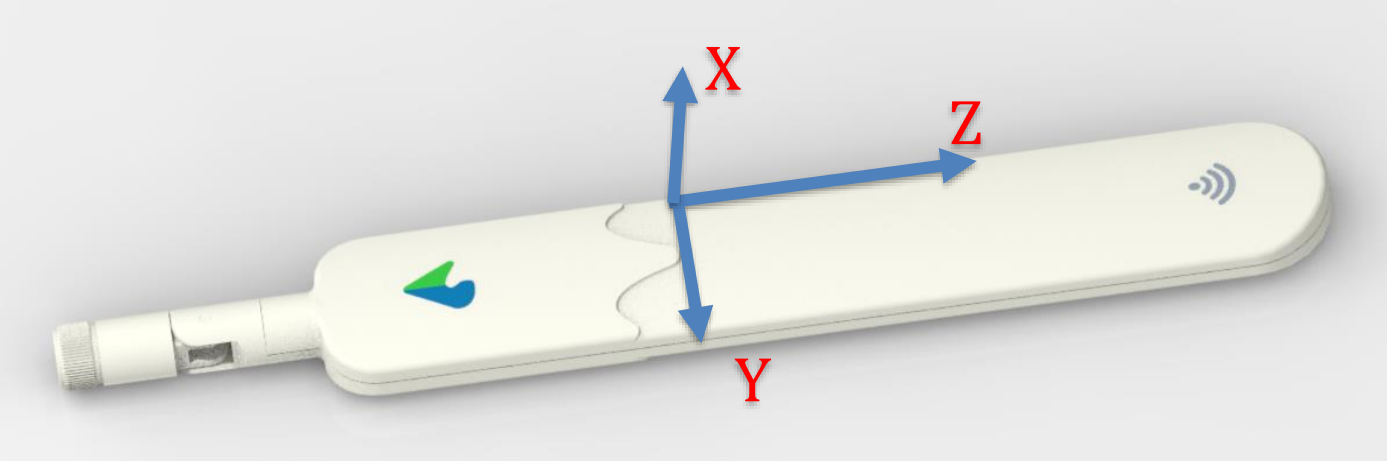

Figure 2: Model ET04VSABA Measurement axes

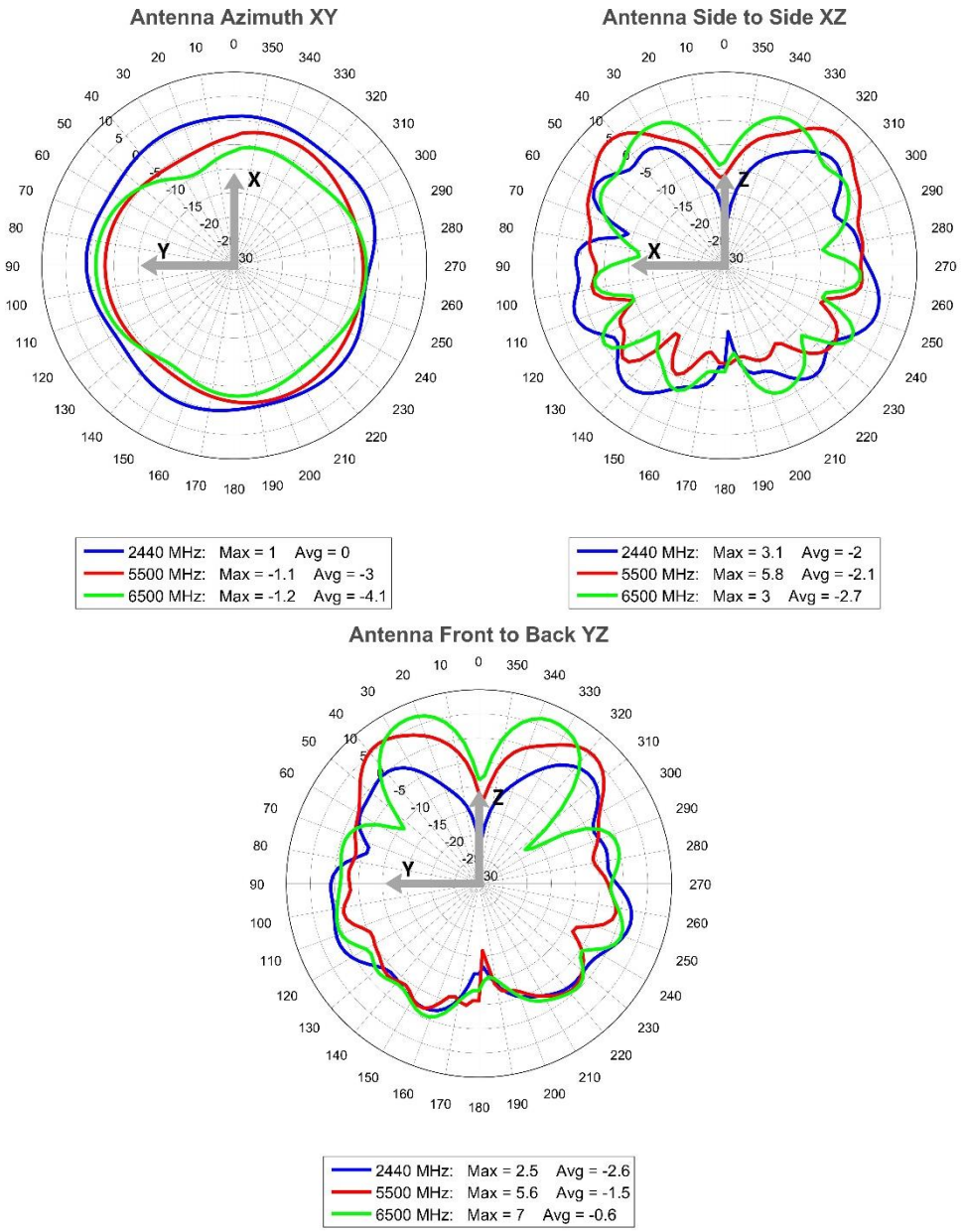

Figure 3: Model ET04VSABA Measured Radiation Patterns at 2440 to 6500 MHz

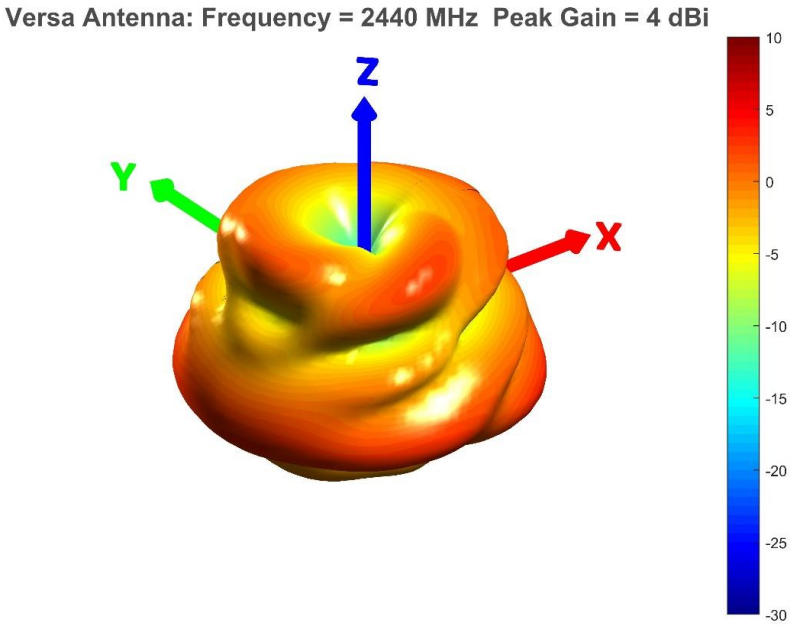

Figure 4: Model ET04VSABA Measured 3D Radiation Patterns at 2440 MHz

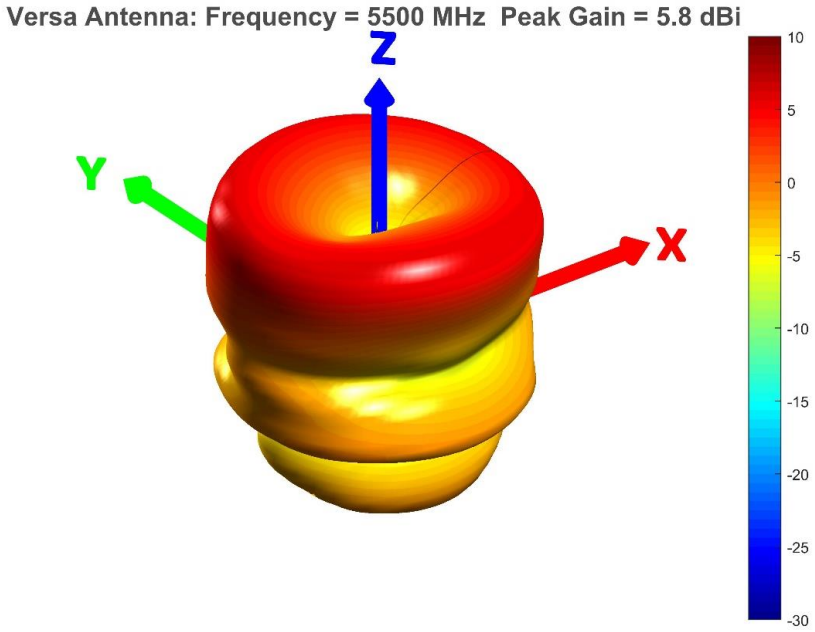

Figure 5: Model ET04VSABA Measured 3D Radiation Patterns at 5500 MHz

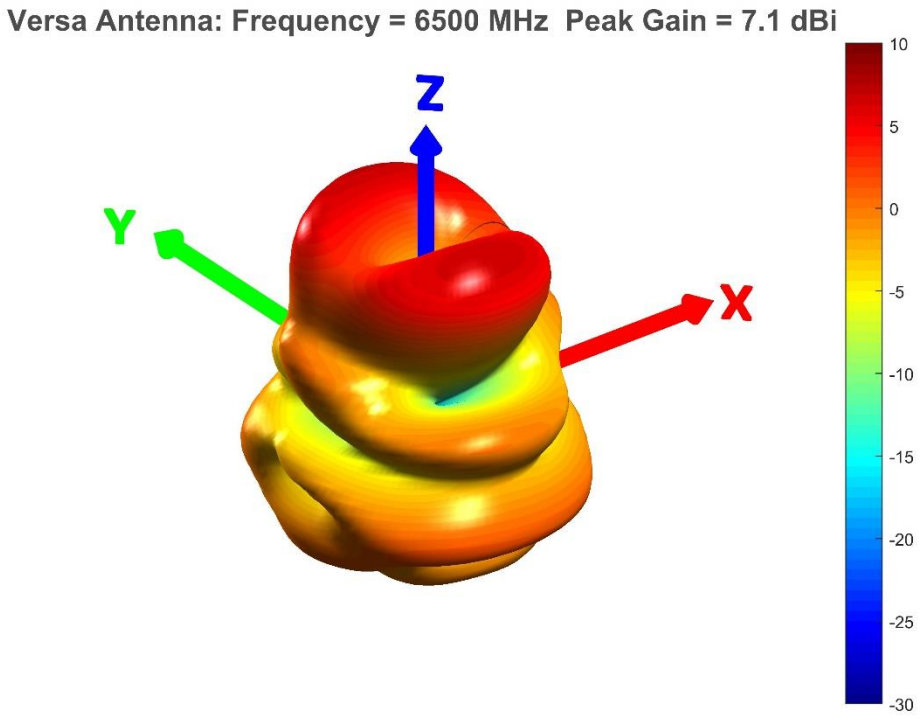

Figure 6: Model ET04VSABA Measured 3D Radiation Patterns at 6500 MHz

5. Dimensions

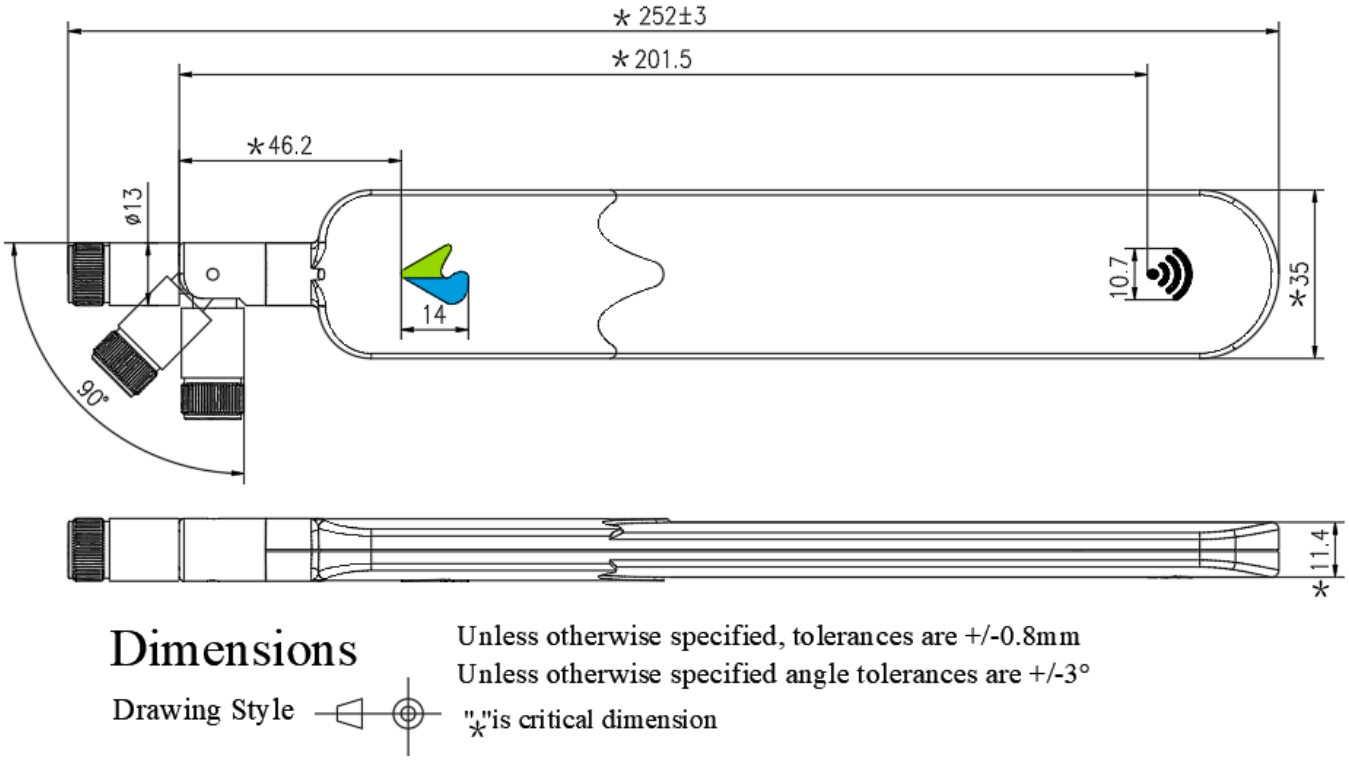

Figure 7: Model Dimensions

6. Mounting Guidelines

The model ET04VSABA only supports 0-90degree rotation in the vertical direction, as shown in the figure below：

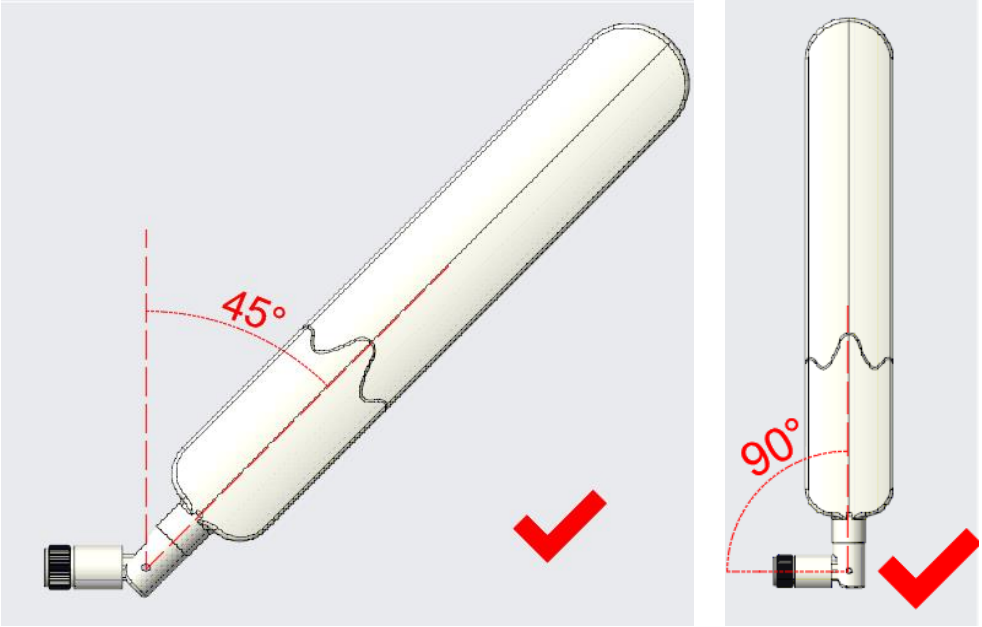

Figure 8: The installation mode that can be implemented

The Model ET04VSABA does not support horizontal rotation of 0-90 degrees, as shown below:

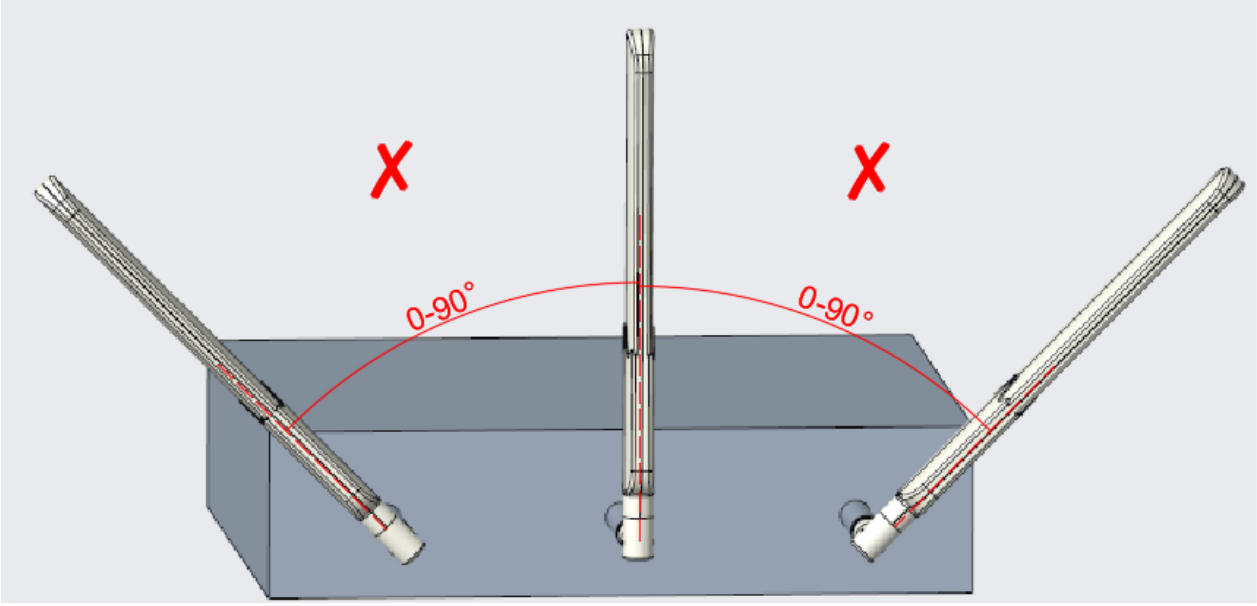

Figure 9: The installation method cannot be implemented

REV	DESCRIPTION	BY	DATE
V1	INITIAL DESIGN	BWU	06/June/2022

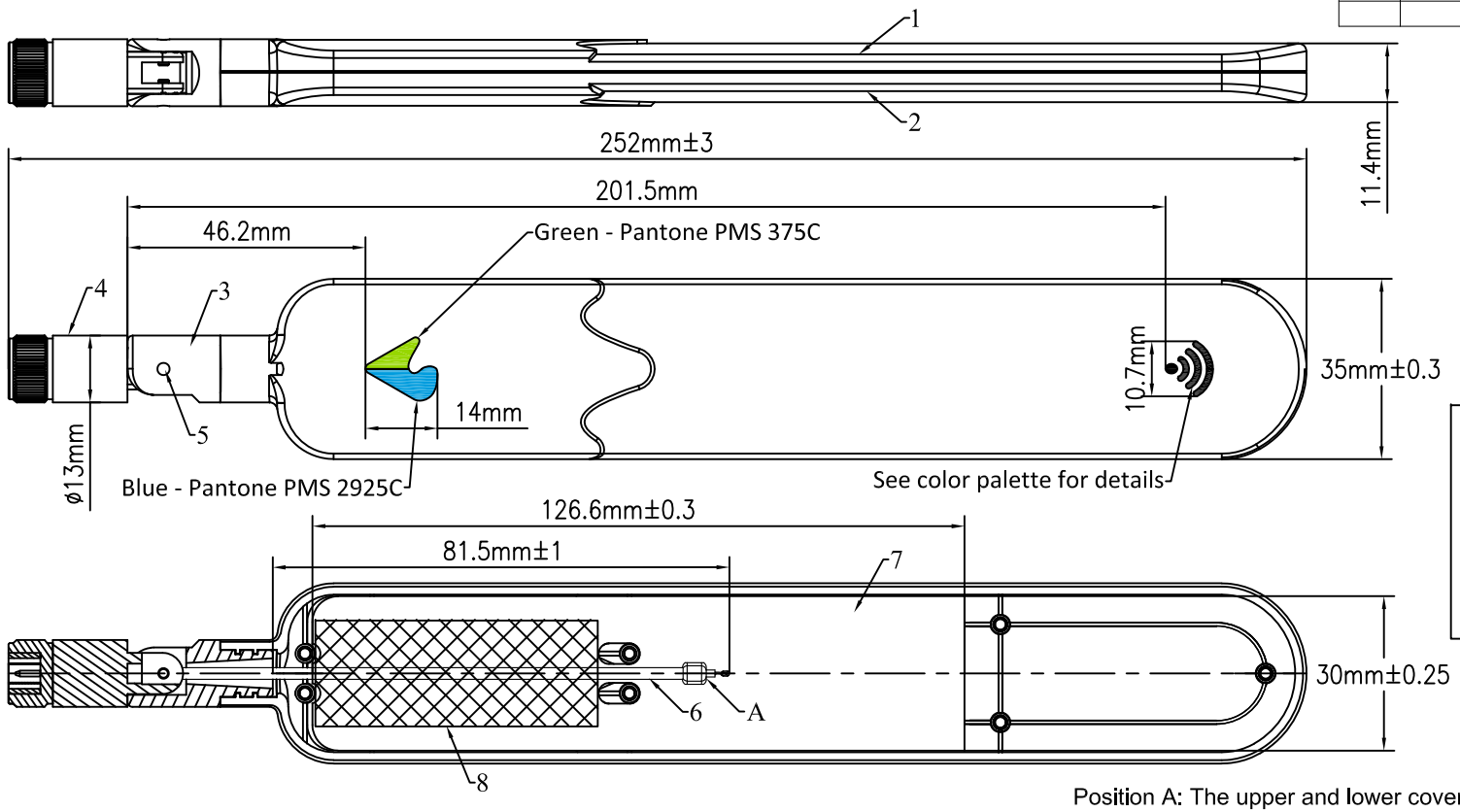

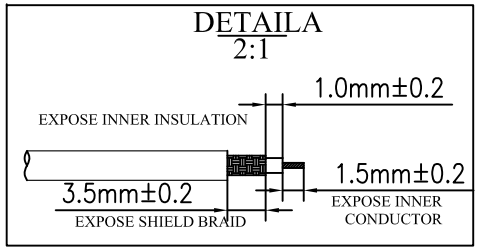

Position A: The upper and lower cover is welded by ultrasonic wave

ITEM#	DESIGNATOR	QUANTITY	NOTE
8	High temperature tape	1	2560K,Color:Yellow
7	PCB antenna	1	N04VSABB_A,Color:Blue
6	Cable	1	RG178,Color:Brown
5	Metal rivets	2	2643C-12-00-004-1_A_ET56AGAMA_Metal rivet,Color:Silver
4	Connector	1	SMA PLUG,Frequency range:DC-8GHz,Color: Grey
3	Hinge housing	1	Material:100% raw material sabic PC110,Color: Grey
2	Bottom housing	1	Material: Bayer PC/ABS-FR3008,Color: Grey
1	TOP housing	1	Material: Bayer PC/ABS-FR3008,Color: Grey

NOTES (UNLESS OTHERWISE SPECIFIED)
The processes used to assemble this antenna shall comply with the following specifications ,unless otherwise specified.
Bom:use the bom file for assembling the antenna.this table is provided for reference only.
Unless otherwise specified, tolerances are ±2mm

THIS DOCUMENT IS PROPRIETARY AND CONFIDENTIAL PROPERTY OF AIRGAIN INC.

BOM No. 3852C-06-00-001-1		3611 Valley Centre Drive, Suite 150 San Diego, CA 92130 USA	Airgain™
PCB No. 3852C-12-00-001-1		Project	External Dipole Antenna
Drawn by BWU	Date 06/June/2022	Title	ET04VSABA_ASSY
Checked by	Date	Size B	Number 3852C-07-00-001-3 / Rev. V1
Approved by	Date	Layer / File	Scale / Sheet 1 of 1