Estech Co., Ltd.
347-69, Jungbu-daero 147beon-gil, Majang-myeon,
Icheon-si, Gyeonggi-do 467-811, R. O. Korea
TEL : +82 31 6318037 FAX : +82 31 6318039 www.estech.co.kr

Test Report for FCC

FCC ID : TKWBMCOMBOD-S20

Report Number		ESTF151508-006		
Applicant	Company name	Suprema Inc.		
	Address	16F Parkview Tower, Jeongja-dong, Bundang-gu, Seongnam, Gyeonggi, 463-863 Korea		
	Telephone	+82-31-7104922		
Contack person		Sun Bong Kang		
Product	Product name	Scanner (BioMini Combo Dual(S20))		
	Model No.	BioMini Combo Dual(S20)	Manufacturer	Suprema Inc.
	Serial No.	None	Country of origin	KOREA
Test date	21-Aug-15		Date of issue	28-Aug-15
Testing location	347-69, Jungbu-daero 147beon-gil, Majang-myeon, Icheon-si, Gyeonggi-do 467-811, R. O. Korea			
Standard	FCC PART 15 Subpart C(15.225), ANSI C 63.10(2009)			
Result		Complied		
Measurement facility registration number		659627		
Tested by	Senior Engineer K.H. Chung		(Signature)	
Reviewed by	Engineering Manager J.M. Yang		(Signature)	
Abbreviation	OK, Pass = Complied, Fail = Failed, N/A = not applicable			

* Note

- This test report is not permitted to copy partly without our permission
- This test result is dependent on only equipment to be used
- This test result based on a single evaluation of one sample of the above mentioned

Estech Co., Ltd.
347-69, Jungbu-daero 147beon-gil, Majang-myeon,
Icheon-si, Gyeonggi-do 467-811, R. O. Korea
TEL : +82 31 6318037 FAX : +82 31 6318039 www.estech.co.kr

Contents

1. Laboratory Information 3
2. Description of EUT 4
3. Test Standards 5
4. Measurement condition 6
5. 20 dBm Bandwidth 8
5.1 Procedure 8
5.2 20 dBm Bandwidth Set up 8
5.3 Measurement Data 8
6. Frequency Tolerance 9
6.1 Procedure 9
6.2 Test Equipments 9
6.3 Measurement Data 10
7. Measurement of radiated emission 11
7.1 Radiated emission limits, general requirements 11
7.2 Measurement equipment 11
7.3 Environmental conditions 11
7.4 Test data(9 kHz ~30 MHz) 12
7.5 Test data(30 MHz ~ 1 GHz) 13
7.6 Test data(Above 1 GHz) 13
8. Measurement of conducted emission 14
8.1 Measurement equipment 14
8.2 Environmental conditions 14
8.3 Test data 15
Appendix 1. Special diagram
Appendix 2. Antenna Requirement

1. Laboratory Information

1.1 General

This EUT (Equipment Under Test) has been shown to be capable of compliance with the applicable technical standards and is tested in accordance with the measurement procedures as indicated in this report.ESTECH Lab attests to accuracy of test data. All measurement reported herein were performed by ESTECH Co., Ltd.

ESTECH Lab assume full responsibility for the completeness of these measurements and vouch for the qualifications of all persons taking them.

1.2 Test Lab.

Corporation Name : ESTECH Co., Ltd.

Head Office : Suite 1015 World Meridian II, 123 Gasan Digital 2-ro, Geumcheon-gu, Seoul 153-759, R. O. Korea

EMC/Telecom/Safety Test Lab : 347-69, Jungbu-daero 147beon-gil, Majang-myeon, Icheon-si, Gyeonggi-do 467-811, R. O. Korea

1.3 Official Qualification(s)

MSIP : Granted Accreditation from Ministry of Information & Communication for EMC, Safety and Telecommunication

KOLAS : Accredited Lab By Korea Laboratory Accreditation Schema base on CENELEC requirements

FCC : Conformity Assessment Body(CAB) with registration number 659627 under APEC TEL MRA between the RRA and the FCC

VCCI : Granted Accreditation from Voluntary Control Council for Interference from ITE

2. Description of EUT

2.1 Summary of Equipment Under Test

Product	: Scanner (BioMini Combo Dual(S20))
Model Number	: BioMini Combo Dual(S20)
Serial Number	: NONE
Manufacturer	: Suprema Inc.
Country of origin	: KOREA
Operating Frequency	: 13.56 MHz
Antenna Type	: Mag Integrated Loop Antenna
Modulation Type	: ASK
Channel	: 1
Power Rating	: Via USB Port(DC 5 V, 420 mA MAX)
Receipt Date	: 3-Aug-15
X-tal list(s) or Frequencies generated	: USB(2.0 / 480 Mbps), RFID 13.56 MHz

2.2 General descriptions of EUT

Fingerprint Sensor	Optical
Resolution	500 dpi, 256 gray
Platen Size	18.0mmx25.4mm(0.71"x1.0")
Sensing Area	17.0mmx25.0mm(0.67"x0.99")
Image Size	320x480 pixels
Interface	USB2.0 High Speed
Operating System	MS Windows/ Linux(32/64bit)
Operating Temp./Humidity	-10℃~50℃ / 0~90%
Weight	0.40 kg
Certificates	CE, FCC, KCC, UL or CB, WHQL, USB-IF, WEEE
Smart Card Reader	ISO7816 Class A/B/C (5V, 3.0V, 1.8V) T=0 , T=1 EMV2000 contact smart card with SAM slot(optional, max 2x SAM) Interface: USB2.0 CCID , PC/SC driver
Contactless Smart Card Reader	**ISO/IEC 14443 A&B, Mifare, FeliCa** **NFC Forum tag types (Jewel, Mifare Ultralight, FeliCa, FeliCa lite, Mifare Desifare)** **EMV2000 contactless smart card** **Frequency: 13.56 MHz +- 7KHz** **Distanace transaction: Up to 10cm** **Baud: 106/212/424/848 kbit/s** **Interface: USB2.0 CCID, PC/SC driver**
Dimension(WxLxH)	95.7mmx114.8mmx52.6mm

3. Test Standards

Test Standard : FCC PART 15 Subpart C(15.225)

This Standard sets out the regulations under which an intentional, unintentional, or incidental radiator may be operated without an individual license. It also contains the technical specifications, administrative requirements and other conditions relating to the marketing of Part 15 devices.

Test Method : ANSI C 63.10 (2009)

This standard sets forth uniform methods of measurement of radio-frequency (RF) signals and noise emitted from both unintentional and intentional emitters of RF energy in the frequency range 9 kHz to 40 GHz. Methods for the measurement of radiated and AC power-line conducted radio noise are covered and may be applied to any such equipment unless otherwise specified by individual equipment requirements. These methods cover measurement of certain decides that deliberately radiate energy, such as intentional emitters, but does not cover licensed transmitters. This standard is not intended for certification/approval of avionic equipment or for industrial, scientific, and medical (ISM) equipment These method apply to the measurement of individual units or systems comprised of multiple units

Summary of Test Results

Applied Satandard : 47 CFR Part 15, Subpart C				
Standard	Test Type	Result	Remark	Limit
15.203	Antenna Requirement	Pass	Meet the requirement	
15.207	AC Power Conducted Emission	Pass	Meet the requirement	
15.225(a)	Radiated Emission (13.553 ~13.567) MHz	Pass	Meet the requirement	15,848 uV/m at 30 m
15.225(b)	Radiated Emission (13.410 ~13.553 , 13.567 ~ 13.710) MHz	Pass	Meet the requirement	334 uV/m at 30 m
15.225(c)	Radiated Emission (13.110 ~13.410 , 13.710 ~ 14.010) MHz	Pass	Meet the requirement	106 uV/m at 30 m
15.225(d)	Apply section 15.209 (out side band of the 13.110 ~14.010) MHz	Pass	Meet the requirement	
15.225(e)	Frequency stability	Pass	Meet the requirement	
15.215(c)	20dB Bandwidth	Pass	Meet the requirement	

4. Measurement Condition

4.1 EUT Operation.

- The EUT was in the following operation mode during all testing.

1. Connect the EUT to USB port of the Note PC.
2. Install the provided test program by the manufacturer.
3. Execute the test program and check the operating status of the EUT.
   > Check fingerprint detection and display on the note pc continuously.

4.2 Configuration and Peripherals

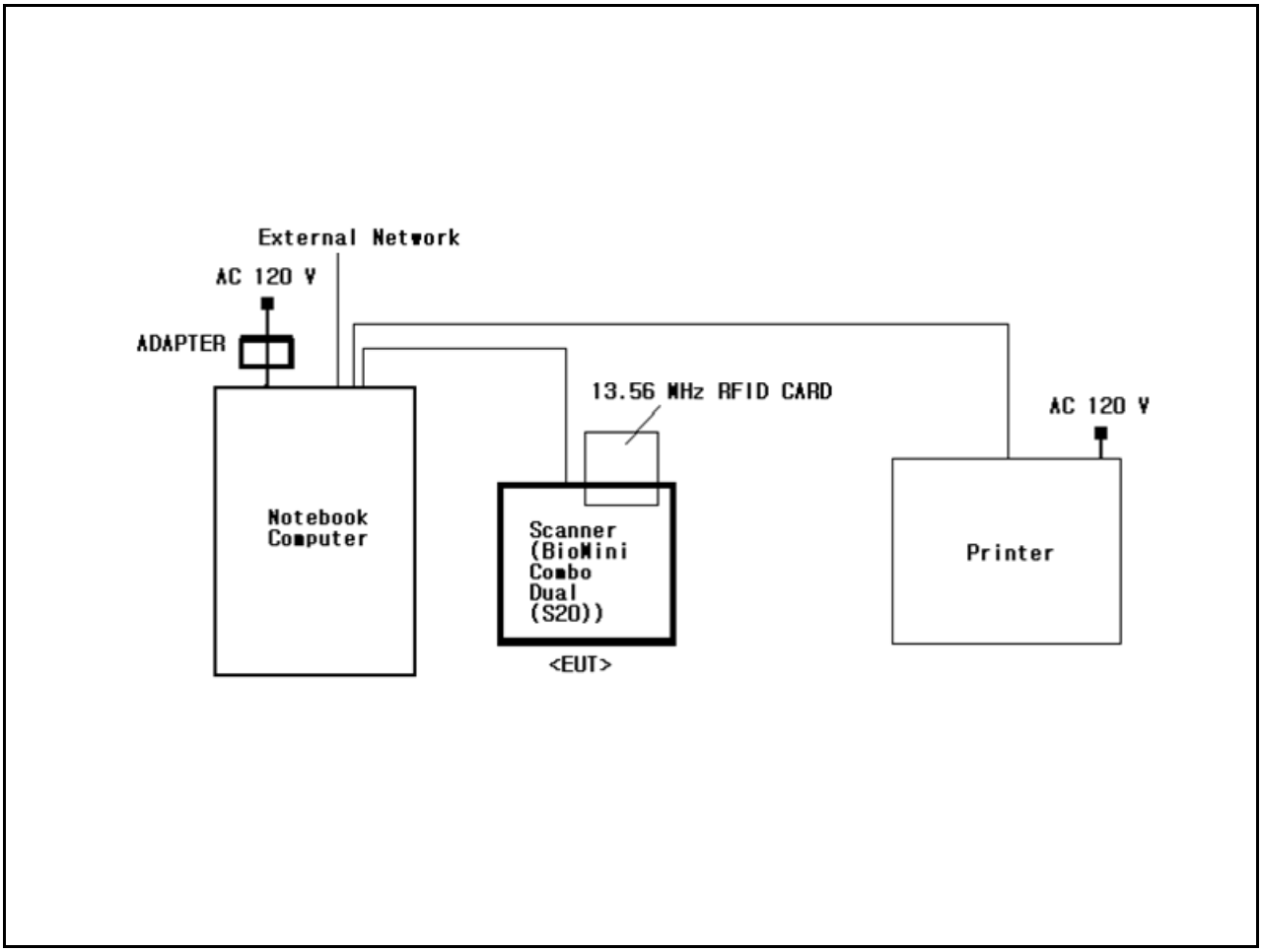

4.3 EUT and Support equipment

Equipment Name	Model Name	S/N	Manufacturer	Remark (FCC ID)
Scanner (BioMini Combo Dual(S20))	BioMini Combo Dual(S20)	NONE	Suprema Inc.	EUT
RFID CARD	NONE	NONE	Suprema Inc.	
Notebook Computer	P30G	NONE	Dell Inc.	
Adapter	AA90PM111	NONE	Acbel Electronic (Dong Guan) Co., Ltd	
Printer	K10229	NONE	CANON VIETNAM CO.,LTD.	

4.4 Cable Connecting

Start Equipment		End Equipment		Cable Standard		Remark
Name	I/O port	Name	I/O port	Length	Shielded	
Scanner (BioMini Combo Dual(S20))	USB	Notebook Computer	USB	1.0	Shielded	
Scanner (BioMini Combo Dual(S20))	13.56 MHz	RFID CARD	13.56 MHz	-	-	
Notebook Computer	LAN	External Network	LAN	20.0	Unshielded	
Notebook Computer	Power	Adapter	-	2.0	Shielded	
Notebook Computer	USB	Printer	USB	2.0	Shielded	

5. 20 dB Bandwidth

5.1 Procedure

The transmitter output was connected to the spectrum analyzer. The bandwidth of the fundamental frequency was measured by spectrum analyzer. The 20 dB bandwidth is defined as the bandwidth at 20 dB below from peak power point.

5.2 20dB Bandwidth setup

The spectrum analyzer is set to as following
RBW: 30 Hz
VBW: 300 Hz
Span: 5 kHz
Sweep:suitable duration based on the EUT specification

20dB Bandwidth Test Instruments

Decription	Model	Serial Number	Cal. Due Data
Spectrum Analyzer	E4440A	US41421291	15-Jan-16

5.3 Measurement Data

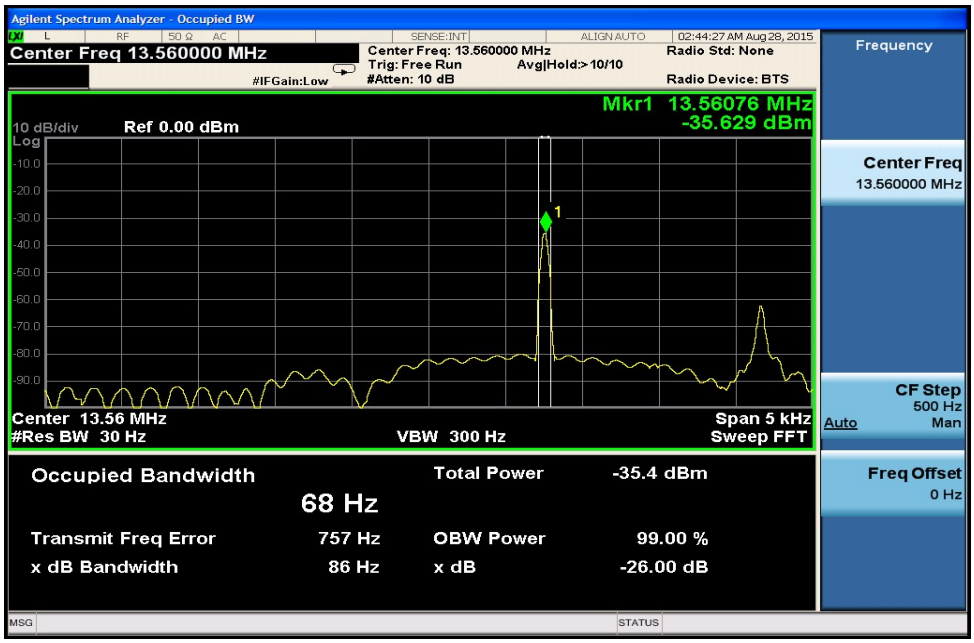

6. Frequency Tolerance

6.1 Procedure

The frequency stability of the transmitter is measured by:

a) Temperature: The temperature is varied from -20 ℃ to +50 ℃ using an environmental chamber.

b) Primary Supply Voltage: The primary supply voltage is varied from 85 % to 115 % of the voltage normally at the input to the device or at the power supply terminals if cables are not normally supplied.

The frequency tolerance of the carrier shall be maintained within ±0.01 % of the operating frequency.

6.2 Equipment lists

The following test equipments are used during test

Decription	Model	Serial Number	Cal. Due Data
Spectrum Analyzer	E4440A	US41421291	15-Jan-16
DC Power Supply	AK-3010	01000106	13-Jan-16
Temp./Humidity Chamber	PSL-2GT	1955798	13-Jan-16

Estech Co., Ltd.
347-69, Jungbu-daero 147beon-gil, Majang-myeon,
Icheon-si, Gyeonggi-do 467-811, R. O. Korea
TEL : +82 31 6318037 FAX : +82 31 6318039 www.estech.co.kr

6.3 Measurement Data

Operting Frequency :	13.5600000	Hz
Reference Voltage :	5.00	Vd.c.
Deviatin Limit :	± 0.01	%

Voltage (%)	Power (Vdc)	Temperature (℃)	Frequency (Hz)	Deviation (%)
100	5.00	+20 ℃(Ref)	13.560760	0.005604
100		-20	13.560882	0.006504
100		-10	13.560921	0.006792
100		**0**	13.560765	0.005642
100		10	13.560764	0.005634
100		20	13.560780	0.005752
100		30	13.560762	0.005621
100		40	13.560752	0.005546
100		50	13.560785	0.005789
85	4.25	20	13.560767	0.005656
115	5.75	20	13.560791	0.005833
BATT.ENDPOINT	2.80	20	13.560738	0.005442

7. Measurement of radiated disturbance

The EUT was placed on the top of a rotating table 0.8 m above the ground at a 10 m semi-anechoic chamber . The table was rotated 360° to determine the position of the highest radiation.Then antenna is a loop antenna is fixed at 1 m above the ground to determine the maximum value of the field strength. Both parallel and perpendicular of the antenna are set to make the measurement. For each suspected emission, the EUT was arranged to its worst case and then the table was turned from 0° to 360° to find the maximum reading. The test receiver system was set to Peak Detect Function and Specified Bandwidth with Maximum Hold Mode.

7.1 Radiated emission limits, general requirements

Except as provided elsewhere in this Subpart, the emissions from an intentional radiator shall not exceed the field strength levels specified in the following table:

Frequency (MHz)	Field strength @30 m (uV/m)	Field strength @30 m (dBuV/m)	Field strength @3m (dBuV/m)
Below 13.110	30	29.5	69.5
13.110 ~13.410	106	40.5	80.5
13.410~13.553	334	50.5	90.5
13.553~13.567	15,848	84	124
13.567~13.710	334	50.5	90.5
13.710~14.010	106	40.5	80.5
Above 14.010	30	29.5	69.5

* dBuV/m=20*log(uV/m) * Distance factor=40dB / decade(15.31(f))

7.2 Measurement equipments

Equipment Name	Type	Manufacturer	Serial No.	Next Calibration date
TEST Receiver	ESCI7	ROHDE & SCHWARZ	1166.5950.07	13-Jan-16
Logbicon Antenna	VULB 9168	SCHWARZBECK	237	4-Mar-16
Turn Table	DT3000-2t	Innco System GmbH	N/A	-
Antenna Mast	MA4000-EP	Innco System GmbH	N/A	-
Loop Antenna	HFH2-Z2	ROHDE & SCHWARZ	100188	19-Aug-16
PREAMPLIFIER	8449B	AGILENT	3008A00595	13-Jan-16
Test Receiver	ESPI7	ROHDE & SCHWARZ	100185	13-Jan-16
Horn Antenna	BBHA 9120D	SCHWARZBECK	352	7-May-16
Turn Table	DT1500-S	Innco System GmbH	N/A	-
Antenna Master & Turn table controller	CO2000-P	Innco System GmbH	CO2000/642 /28051111/L	-

7.3 Environmental Condition

Test Place : 10 m Semi-anechoic chamber
Below 1 GHz
Temperature (°C) : 21.1 ℃
Humidity (% R.H.) : 57.1 % R.H.

Test Place : 3 m Semi-anechoic chamber(3 m)
Above 1 GHz
Temperature (°C) : 21.0 ℃
Humidity (% R.H.) : 57.2 % R.H.

Estech Co., Ltd.
347-69, Jungbu-daero 147beon-gil, Majang-myeon,
Icheon-si, Gyeonggi-do 467-811, R. O. Korea
TEL : +82 31 6318037 FAX : +82 31 6318039 www.estech.co.kr

7.4 Test data(9 kHz ~ 30 MHz)

Test Date : 21-Aug-15 Measurement Distance : 3 m

Frequency (MHz)	Reading (dBμV)	Vertical Position [Angle]	EUT Position	Height (m)	Correction Factor		Result Value(Quasi-Peak)		
					Ant Factor (dB)	Cable (dB)	Limit (dBμV/m)	Result (dBμV/m)	Margin (dB)
Below 13.110 MHz									
Noise Floor	-	-	-	-	18.70	0.5	69.5	-	-
13.110 MHz to 13.410 MHz									
Noise Floor	-	-	-	-	18.70	0.5	80.5	-	-
13.410 MHz to 13.553 MHz									
Noise Floor	-	-	-	-	18.70	0.5	90.5	-	-
13.553 MHz to 13.567 MHz									
13.5626	37.18	0 °	Z	1.5	18.80	0.5	124.0	56.48	67.52
13.567 MHz to 13.710 MHz									
Noise Floor	-	-	-	-	18.70	0.5	90.5	-	-
13.710 MHz to 14.010 MHz									
Noise Floor	-	-	-	-	18.70	0.5	80.5	-	-
14.010 MHz to 30 MHz									
27.12	19.50	85 °	Z	1.5	18.40	0.8	69.5	38.70	30.80

Remark	*The 30 m limit was converted to 3 m Limit using square factor(x) as it was found by measurements as follows; *3 m Limit(dBuV/m) = 20log(X)+40log(30/3)= 20log(15848)+40log(30/3) = 124 dBuV *3 m Limit(dBuV/m) = 20log(X)+40log(30/3)= 20log(30)+40log(30/3) = 69.5 dBuV * The EUT was measured for the worst case by rotating of antenna angle.

Estech Co., Ltd.
347-69, Jungbu-daero 147beon-gil, Majang-myeon,
Icheon-si, Gyeonggi-do 467-811, R. O. Korea
TEL : +82 31 6318037 FAX : +82 31 6318039 www.estech.co.kr

7.5 Test data(30 MHz ~ 1 000 MHz)

Test Date : 21-Aug-15 Measurement Distance : 3 m

Frequency (MHz)	Reading (dBμV)	Position (V/H)	Height (m)	Correction Factor		Result Value(Quasi-peak)		
				Ant Factor (dB)	Cable (dB)	Limit (dBμV/m)	Result (dBμV/m)	Margin (dB)
59.50	20.92	V	1.4	12.34	1.34	40.00	34.61	5.39
269.80	24.05	H	2.4	12.39	2.80	46.00	39.24	6.76
293.10	22.30	H	2.7	13.21	2.92	46.00	38.42	7.58
320.50	21.41	V	1.4	13.94	3.04	46.00	38.39	7.61
480.00	17.31	H	2.3	17.58	3.73	46.00	38.61	7.39
496.60	14.06	V	1.1	17.94	3.80	46.00	35.79	10.21
587.00	18.69	V	1.0	19.76	4.13	46.00	42.58	3.42
750.40	11.94	H	1.7	21.96	4.72	46.00	38.62	7.38

Remark	H : Horizontal, V : Vertical *Result Value = Reading + Antenna + Cable loss *Correction Factor = Ant Factor + Cable *The resolution bandwidth and video bandwidth of test receiver/spectrum analyzer is 120 kHz for Quasi-peak detection

Estech Co., Ltd.
347-69, Jungbu-daero 147beon-gil, Majang-myeon,
Icheon-si, Gyeonggi-do 467-811, R. O. Korea
TEL : +82 31 6318037 FAX : +82 31 6318039 www.estech.co.kr

7.6 Test data (Above 1 GHz)

Test Date : 21-Aug-15 Measurement Distance : 3 m

Frequency (MHz)	Reading (dBμV)	Position (V/H)	Height (m)	Correction Factor		Result Value		
				Ant Factor (dB)	Cable (dB)	Limit (dBμV/m)	Result (dBμV/m)	Margin (dB)
Peak(RBW:1 MHz VBW:1 MHz)								
1488.00	47.15	H	1.1	25.62	-30.45	74.00	42.31	31.69
1488.00	46.76	V	1.0	25.62	-30.45	74.00	41.92	32.08
1584.00	45.78	H	1.0	25.71	-30.09	74.00	41.40	32.60
1584.00	45.75	V	1.0	25.71	-30.09	74.00	41.37	32.63
1840.00	49.27	H	1.0	25.96	-29.54	74.00	45.69	28.31
1840.00	45.73	V	1.1	25.96	-29.54	74.00	42.15	31.85
Average(RBW:1 MHz VBW:10 Hz)								
1488.00	38.89	H	1.1	25.62	-30.45	54.00	34.05	19.95
1488.00	36.25	V	1.0	25.62	-30.45	54.00	31.41	22.59
1584.00	38.19	H	1.0	25.71	-30.09	54.00	33.81	20.19
1584.00	35.50	V	1.0	25.71	-30.09	54.00	31.12	22.88
1840.00	36.34	H	1.0	25.96	-29.54	54.00	32.76	21.24
1840.00	38.21	V	1.1	25.96	-29.54	54.00	34.63	19.37

Remark

H : Horizontal, V : Vertical
*Reading = receiver reading + Amplifier Gain
*CL = Cable Loss-Amplifier Gain
*The resolution bandwidth and video bandwidth of spectrum analyzer is 1 MHz and 10 Hz for average detection at frequency above 1 GHz.
*This test does not require because the highest operating frequency of the EUT is less than 108 MHz.
*Application method of the highest frequency is in the following
*Highest frequency of the EUT is less than 108 MHz, the measurement shall only be made up to 1 GHz.
*Highest frequency of the EUT is between 108 MHz and 500 MHz, the measurement shall only be made up to 2 GHz.
*Highest frequency of the EUT is between 500 MHz and 1 GHz, the measurement shall only be made up to 5 GHz.
*Highest frequency of the EUT is above 1 GHz, the measurement shall be made up to 10 times the highest frequency or 40 GHz,

8. Measurement of conducted disturbance

The continuous disturbance voltage of AC Mains in the frequency from 0.15 MHz to 30 MHz was measured in accordance to FCC Part 15 Subpart C(15.225) & ANSI C 63.10 (2009) The test setup was made according to FCC Part 15 Subpart C(15.225) & ANSI C 63.10 (2009) in a shielded Room. The EUT was placed on a non-conductive table at least 0.8 m above the ground plan. A grounded vertical reference plane was positioned in a distance of 0.4 m from the EUT. The distance from the EUT to other metal surfaces was at least 0.8 m. The EUT was only earthen by its power cord through the line impedance stabilizing network. The power cord has been bundled to a length of 1.0 m. The test receiver with Quasi Peak detector complies with CISPR 16.

8.1 Measurement equipments

Equipment Name	Type	Manufacturer	Serial No.	Next Calibration date
Test Receiver	ESPI	Rohde & Schwarz	100005	13-Jan-16
LISN	ESH2-Z5	POLARAD	872461/048	16-Jan-16
LISN	ESH3-Z5	Rohde & Schwarz	836679/025	13-Jan-16
Pulse Limiter	ESH3-Z2	Rohde & Schwarz	NONE	13-Jan-16

8.2 Environmental Condition

Test Place : Shielded Room

Temperature (°C) : 22.4 ℃

Humidity (% R.H.) : 46.8 % R.H.

Estech Co., Ltd.
347-69, Jungbu-daero 147beon-gil, Majang-myeon,
Icheon-si, Gyeonggi-do 467-811, R. O. Korea
TEL : +82 31 6318037 FAX : +82 31 6318039 www.estech.co.kr

8.3 Test data

Test Date : 21-Aug-15

Frequency (MHz)	Correction Factor		Line (H/N)	Quasi-peak Value			Average Value		
	Lisn (dB)	Cable (dB)		Limit (dBμV)	Reading (dBμV)	Result (dBμV)	Limit (dBμV)	Reading (dBμV)	Result (dB)
0.15	0.12	0.12	H	66.00	45.60	45.84	56.00		
0.15	0.10	0.12	N	66.00	44.40	44.62	56.00		
0.16	0.12	0.12	H	65.46	44.48	44.72	55.46		
0.21	0.10	0.13	H	63.21	42.77	43.00	53.21		
0.21	0.11	0.13	N	63.21	44.13	44.37	53.21		
16.96	0.60	0.41	H	60.00	38.51	39.52	50.00		
Remark	H : Hot Line, N : Neutral Line *Correction Factor = Lisn + Cable *Result = Correction Factor + Reading								

Appendix 1. Special diagram

* HOT LINE

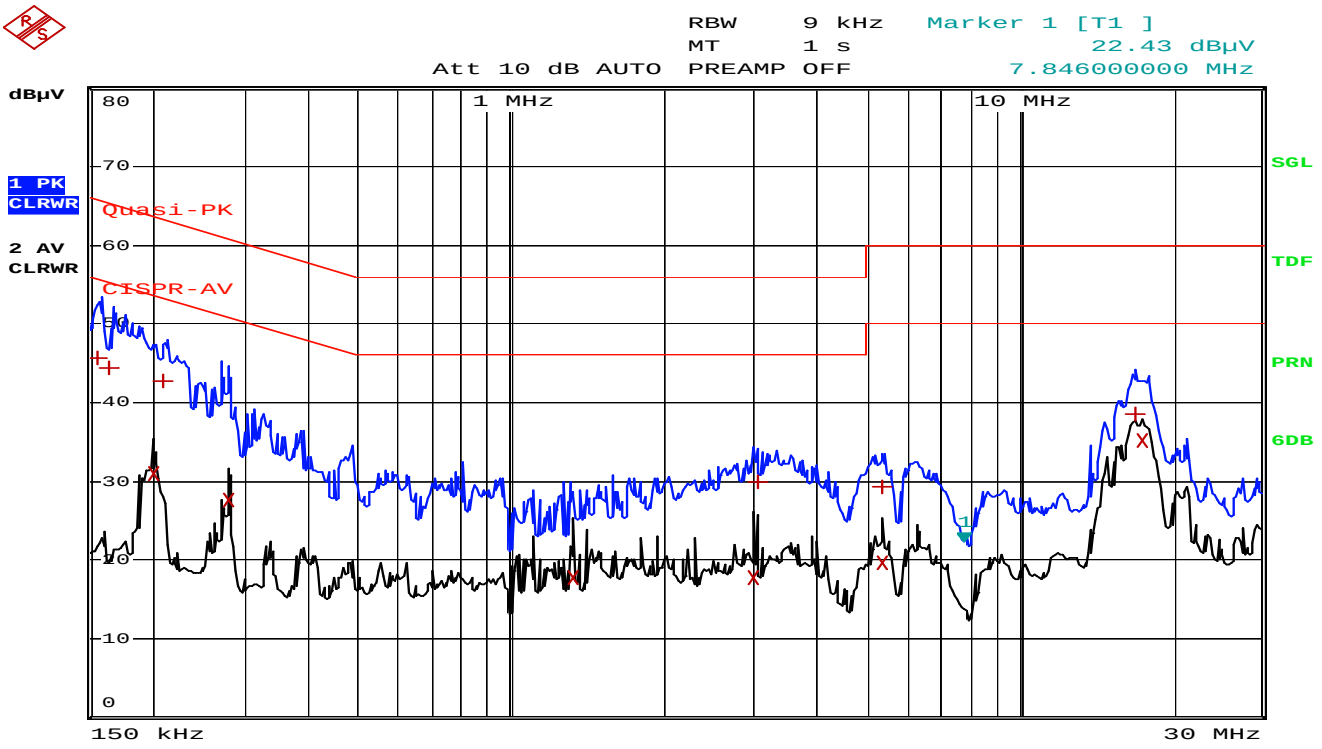

Comment: S20_HOT
Date: 21.AUG.2015 16:45:00

* NEUTRAL LINE

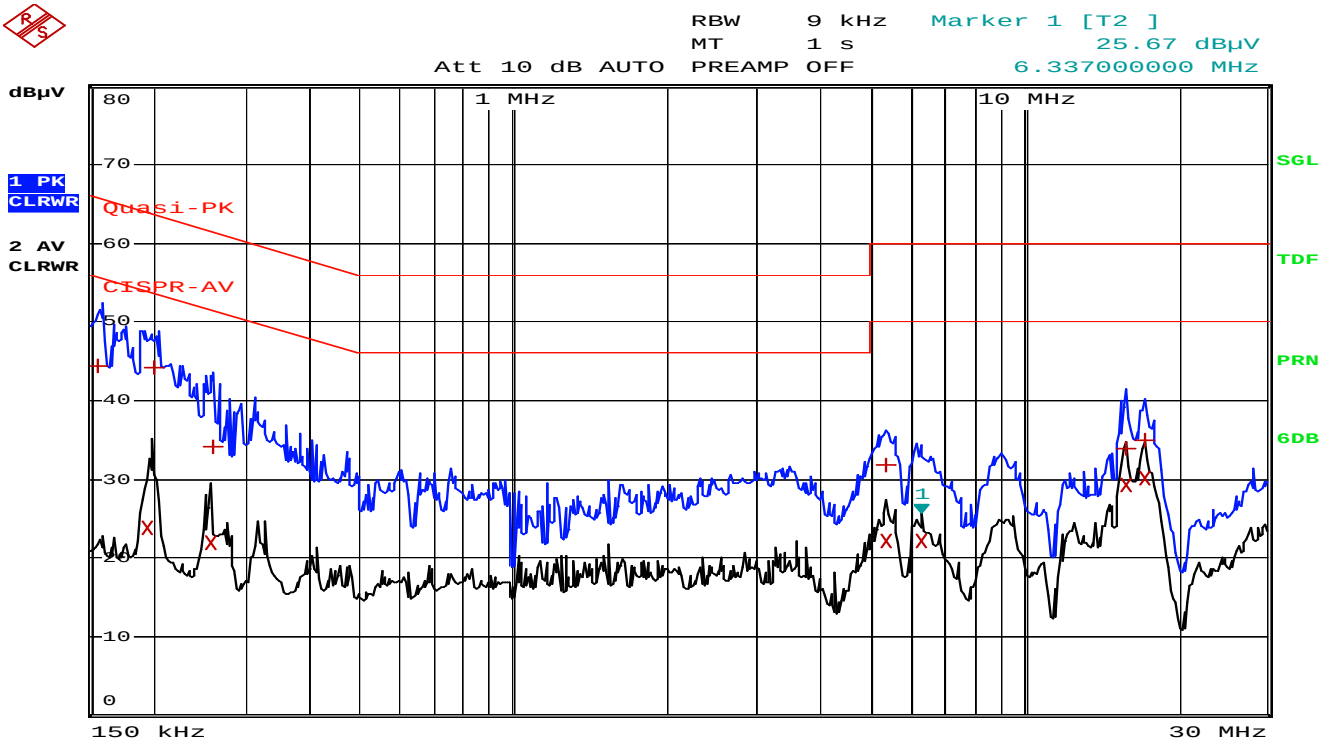

Comment: S20_NEUTRAL
Date: 21.AUG.2015 16:42:30

Appendix 2. Antenna Requirement

Requlation

According to §15.203, an intentional radiator shall be designed to ensure that no antenna other than that furnished by the responsible party shall be used with the device. The use of a permanently attached antenna or of an antenna that uses a unique coupling to the intentional radiator shall be considered sufficient to comply with the provisions of this Section. The manufacturer may design the unit so that a broken antenna can be replaced by the user, but the use of a standard antenna jack or electrical connector is prohibited.

Result

-Complied

The transmitter has an Mag Integrated Loop Antenna.