suprema

XPass D2

(XPD2-GKDBS, XPD2-GDBS, XPD2-GKDB, XPD2-GDB)

INSTALLATION GUIDE

Version 1.00
English

EN 101.00.XPD2-GKDB V1.00A

Contents

Safety instructions....3

Introduction....5
- Components....5
- Name and function of each part....6
  - Cables and connectors....7

Installation....8
- Fixing the bracket and the product....8
- Cable connection....10
  - Power supply connection....10
  - RS-485 connection....10
  - Wiegand and other cable connections....11
- Restoring the Factory Defaults....11
- Resetting the baud rate of RS-485....11

Product specifications....12
- Dimensions....13

FCC compliance information....14

Appendices....15
- Disclaimers....15
- Copyright notice....15
- Open Source License....15
  - MIT License....15

Safety instructions

Observe the following instructions to use the product safely and prevent any risk of injury or property damage.

⚠Warning

Noncompliance of instructions could lead to serious injury or death.

Installation

Do not install the product in a place with direct sunlight, moisture, dust, or soot.

- A fire or electric shock may occur.

Do not install the product in a place with heat from an electric heater.

- A fire or electric shock may occur due to overheating.

Install the product in a dry place.

- Otherwise, a product damage or electric shock may occur due to moisture.

Install the product in a place with no electromagnetic interference.

- Otherwise, a product damage or electric shock may occur.

The user should not install or repair the product independently.

- A fire, electric shock, or personal injury may occur.
- If the product has been damaged due to independent installation or repair of the product by the user, free A/S service will not be provided.

Operation

Do not allow liquids such as water, beverages, or chemicals get into the product.

- A fire, electric shock, or product damage may occur.

⚠Caution

Noncompliance of instructions could lead to minor injury or product damage.

Installation

Do not install the power supply cable in a place where people pass by.

- Product damage or physical injury may occur.

Do not install the product near a highly magnetic object such as a magnet, TV, (especially CRT) monitor, or speaker.

- A product failure may occur.

If installing the product outside where the product is completely exposed, it is recommended to install the product together with the enclosure.

Keep the minimum separation distances between the devices when install multiple devices.

- Otherwise, RF performance is affect to the other device, the devices may not operate normally.

Operation

Do not drop the product or apply an impact to the product.

- A product failure may occur.

When cleaning the product, wipe the product with a soft and dry cloth and no water, benzene or alcohol.

- Otherwise, a product failure may occur.

Introduction

Components

XPass D2

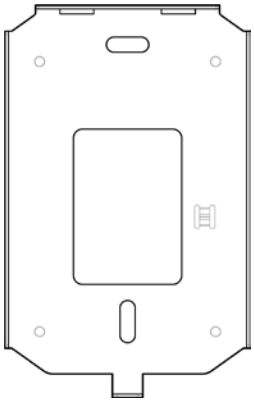

Wall Bracket

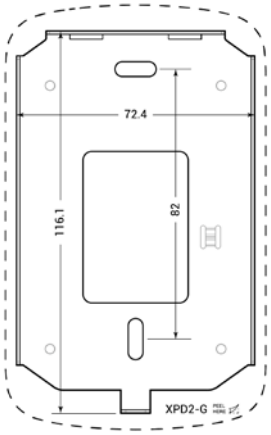

Drilling Template

Wall Fixing Screw x 2

Bracket Fixing Screw (Star Shaped)

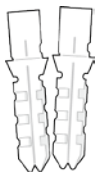

PVC Anchor x 2

120 Ω resistor

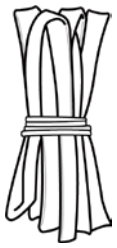

Shrink Tube

Quick Guide

Open Source Software Guide

NOTE

- Components may vary according to the installation environment.

Name and function of each part

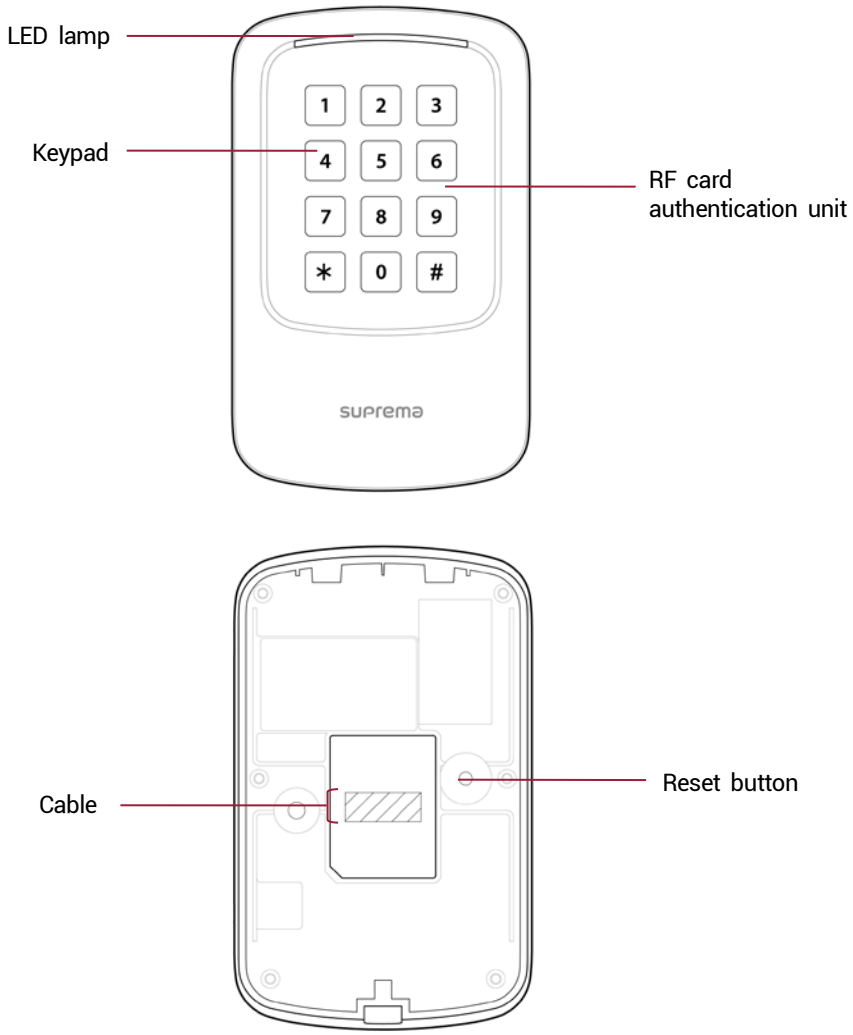

Name	Description
LED lamp	Indicates the operational status of the device with the color of the LED lamp.
Keypad	Used to authenticate by entering the user ID directly. If you want to enter the ID directly, change the authentication method settings in BioStar 2. • **0** ~ **9**: Enters number. • ∗ : Separates the FC code from the ID when entering the Wiegand card ID. • **#** : Used to finish entering.
RF card authentication unit	Reads RF cards for entering and exiting.
Reset button	Initialize the device.
Cable	• Power cable • RS-485 cable • Wiegand output cable • LED input cable • Beep input cable • Tamper cable

Name and function of each part

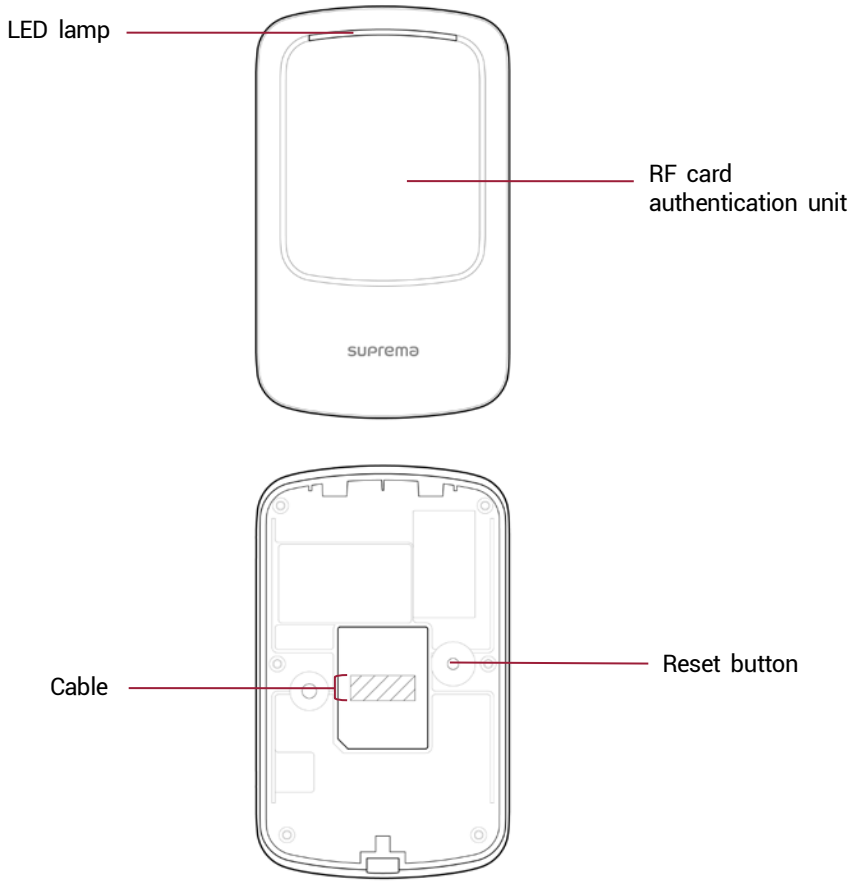

Name	Description
LED lamp	Indicates the operational status of the device with the color of the LED lamp.
RF card authentication unit	Reads RF cards for entering and exiting.
Reset button	Initialize the device.
Cable	• Power cable • RS-485 cable • Wiegand output cable • LED input cable • Beep Input cable • Tamper cable

Cables and connectors

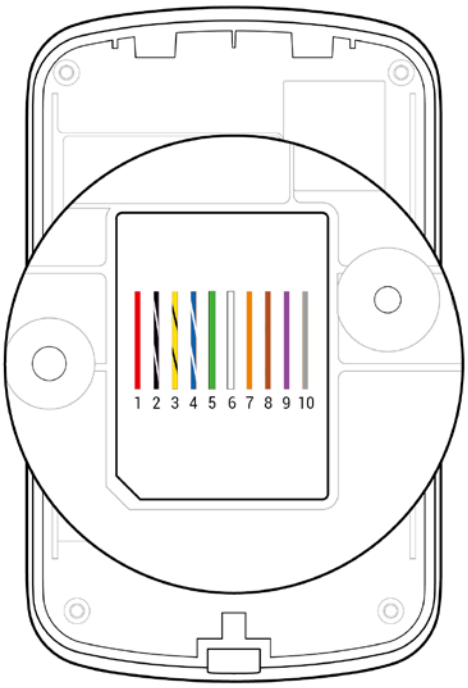

Pin	Name	Color
1	PWR +VDC	Red
2	GND	Black (White stripe)
3	485 TRXN	Yellow (Black stripe)
4	485 TRXP	Blue (White stripe)
5	WG D0	Green
6	WG D1	White
7	LED RED	Orange
8	LED GRN	Brown
9	BEEP	Purple
10	TMPR	Gray

Name and function of each part

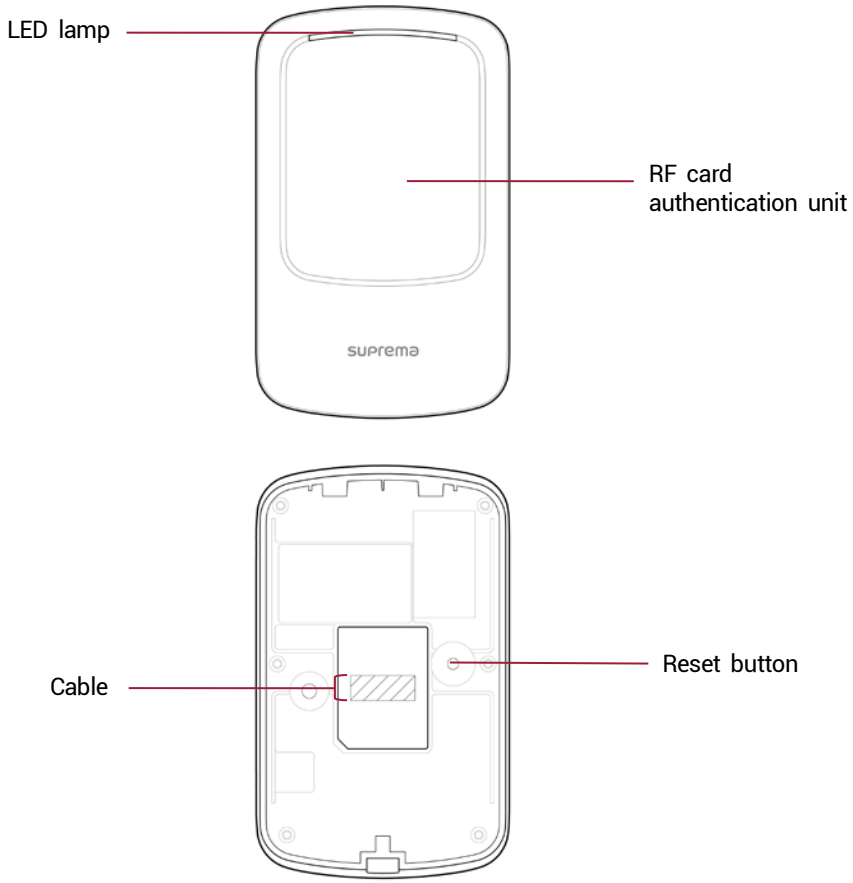

Name	Description
LED lamp	Indicates the operational status of the device with the color of the LED lamp.
RF card authentication unit	Reads RF cards for entering and exiting.
Reset button	Initialize the device.
Cable	• Power cable • RS-485 cable • Wiegand output cable • LED input cable • Beep Input cable • Tamper cable

Installation

Fixing the bracket and the product

1 Determine the correct position to install the bracket using the provided drilling template. Fix the bracket firmly using fixing screws through the bracket to the position where XPass D2 will be installed.

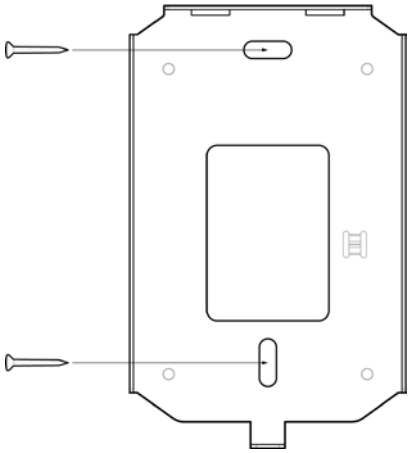

NOTE

- If installing XPass D2 on a concrete wall, drill holes, insert PVC anchors, and fix them with fixing screws.
- To avoid RF interference, a minimum separation distance must be maintained.

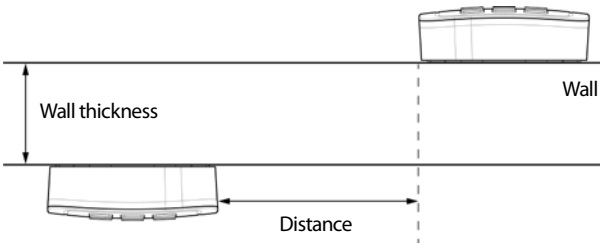

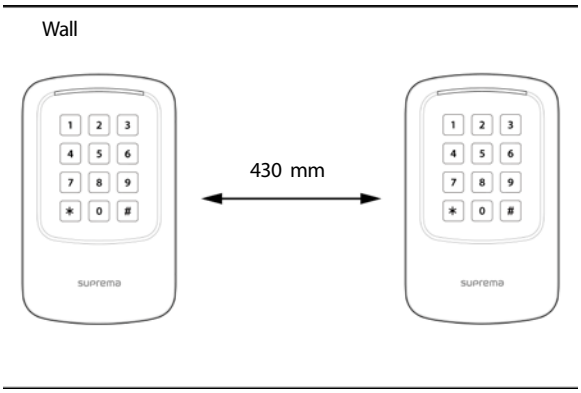

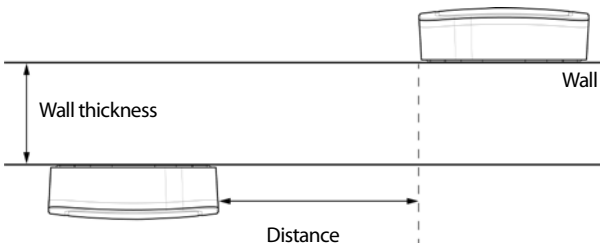

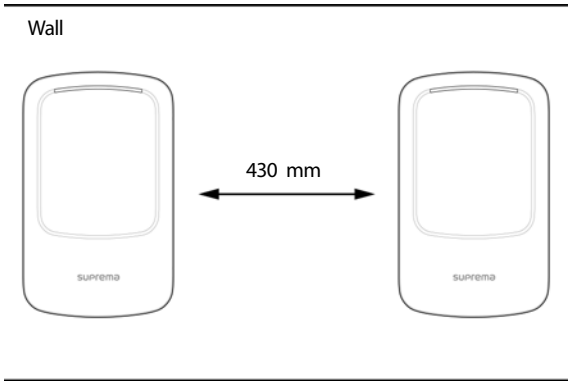

Wall thickness	Distance
100 mm	400 mm
120 mm	380 mm
150 mm	380 mm

2 Install XPass D2 onto the fixed bracket.

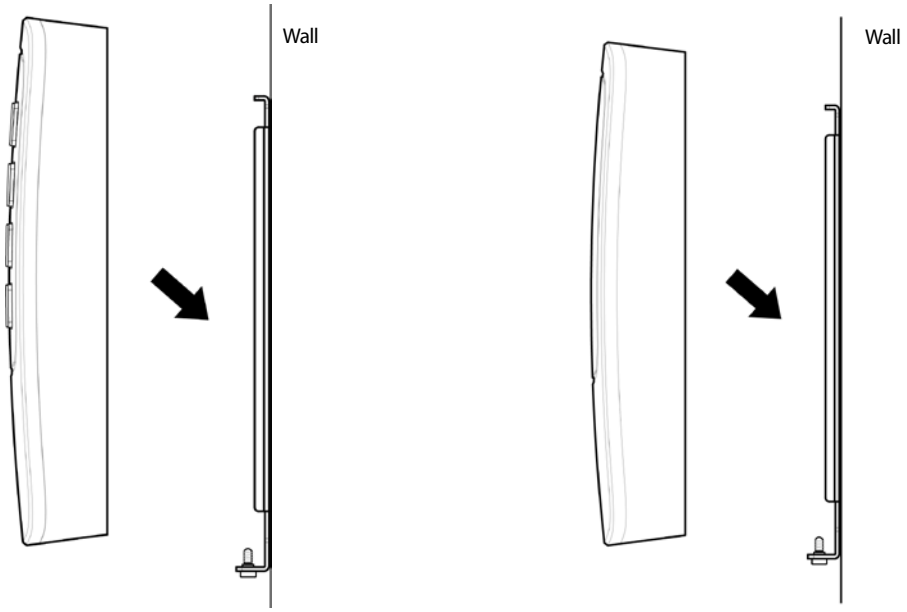

3 Assemble XPass D2 with the bracket by rotating the product fixing screw.

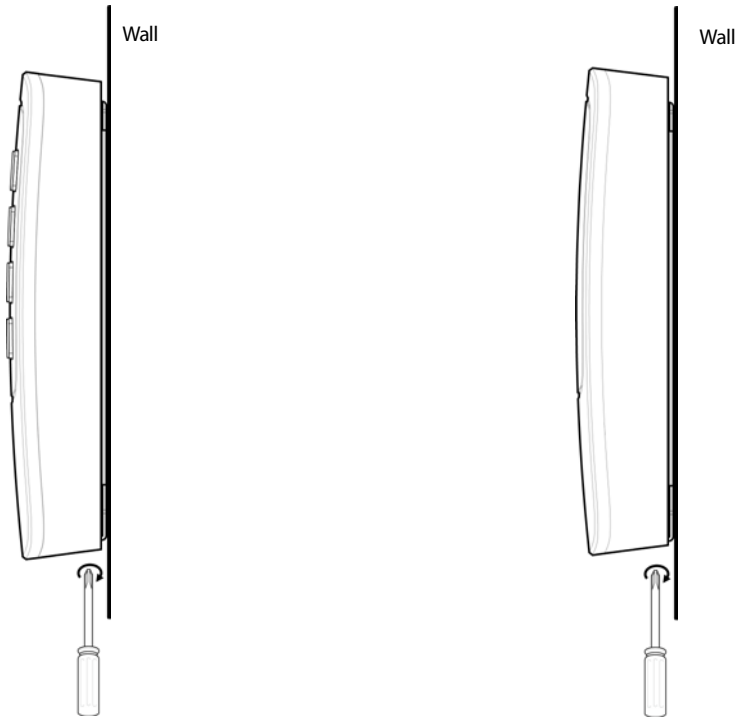

NOTE

- When assembling the product with the bracket, you can use the included bracket fixing screw(Star Shaped) instead of the product fixing screw for enhanced security.

Cable connection

XPass D2 can be used as an RFID card reader by connecting to a master device or a CoreStation.

Power supply connection

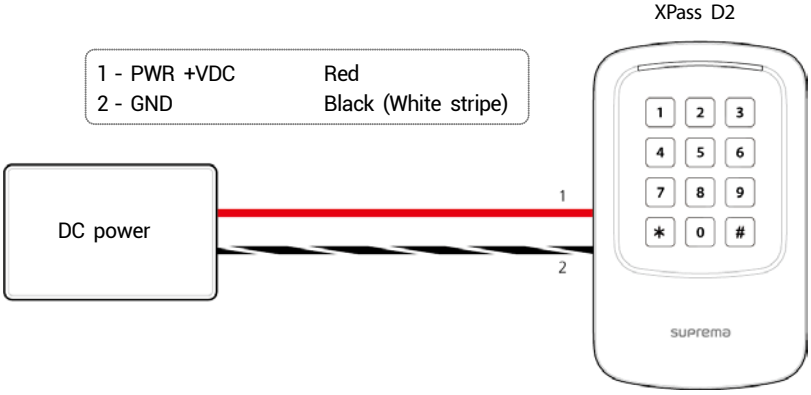

NOTE

- Use a power supply adaptor of DC 12 V (± 10%) with a minimum of 1,500 mA which has obtained the approval of IEC/EN 60950-1. If you wish to connect and use another device to the power supply adaptor, you should use an adaptor with a current capacity which is the same or larger than the total power consumption required for the terminal and another device.

RS-485 connection

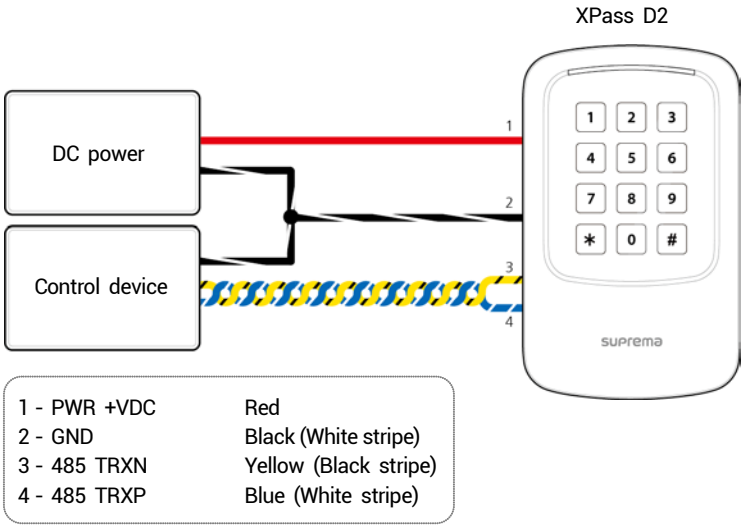

NOTE

- Use an AWG24 twisted pair with a maximum length of 1.2 km for the RS-485 cable.
- If connecting with a RS-485 daisy chain, connect the termination resistor (120 Ω) to both ends of the daisy chain connection. If connected to the middle line, the signal level becomes smaller and the communication performance will deteriorate. Make sure to connect it to both ends of the daisy chain connection.

Wiegand and other cable connections

1 - PWR +VDC	Red
2 - GND	Black (White stripe)
5 - WG D0	Green
6 - WG D1	White
7 - LED RED	Orange
8 - LED GRN	Brown
9 - BEEP	Purple
10 - TMPR	Gray

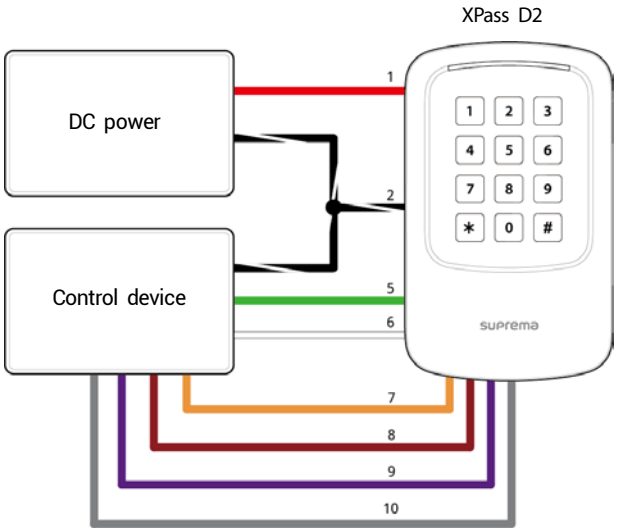

Restoring the Factory Defaults

This will delete all data and root certificate on the device and reset the settings.

1 Turn the power on.

2 Press the reset button three times quickly.

3 When the yellow LED is blinking, press the reset button again.

NOTE

- If there is no root certificate on the device, you cannot restore the factory defaults.

Resetting the baud rate of RS-485

1 Turn the power on.

2 Press and hold the reset button for more than 2 seconds. When the device change to setup mode, the yellow LED is blinking.

3 Depending on the number of times the reset button was pressed, the baud rate changes. You can recognize the baud rate according to the LED color.

The number of times	Baud Rate	LED Color
1	9600	Cyan
2	19200	Blue
3	38400	Magenta
4	57600	White
5	115200	Red

4 The LED blinks for 5 seconds with the color set as the above. The baud rate is set once you hear a beep sound.

NOTE

- If you do not press the reset button after changing to the setup mode, the baud rate is set to 115200.

Product specifications

Category	Feature	Specification
		XPD2-GKDB
Credential	LF card option	EM
	HF card option	MIFARE, MIFARE Plus, DESFire/EV1, FeliCa
	NFC card	Supported
	BLE card	Supported
	RF read range *	MIFARE/DESFire/EM : 50 mm, FeliCa: 30 mm
General	CPU	80 MHz
	Memory	256 KB Flash + 64 KB RAM
	LED	Multi-color
	Sound	Multi-tone Buzzer
	Operating temperature	-35 °C - 65 °C
	Storage temperature	-40 °C - 70 °C
	Operating humidity	0% - 95 %, non-condensing
	Storage humidity	0% - 95 %, non-condensing
	Dimension (W x H x D)	80 mm x 130 mm x 25 mm
	Weight	Device: 145 g Bracket: 52 g (Including washer and bolt)
	IP rating	IP65, IP67
	IK rating	IK08
	Certificates	CE, FCC, KC, RoHS, REACH, WEEE, SIG
Interface	RS-485	1ch
	Wiegand	1ch
	LED	2ch
	Beep	1ch
	Tamper	Supported
Electrical	Power	Voltage: DC 12 V, Current: Max. 400 mA * Use 12 VDC, 1.5A power supply.
	LED, Beep input V_{IH}	Min. 3 V Max. 5 V
	LED, Beep input V_{IL}	Max. 1 V
	LED, Beep Pull-up resistance	4.7kΩ (The input ports are pulled up with 4.7kΩ.)
	Wiegand output V_{OH}	Min. 4.8 V
	Wiegand output V_{OL}	Max. 0.2 V
	Wiegand output Pull-up resistance	Internally pulled up with 1 kΩ

* RF read range will vary depending on the installation environment.

Dimensions

(Unit: mm)
* The tolerance is ±0.3mm.

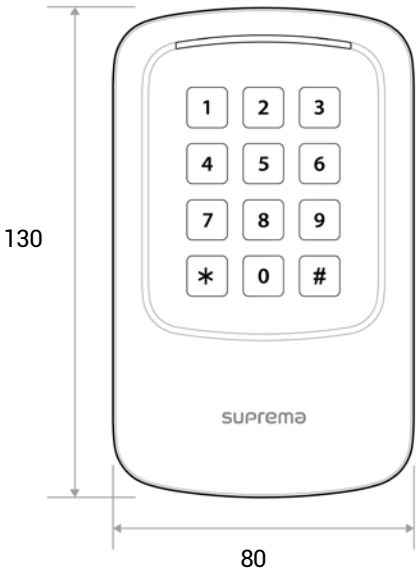

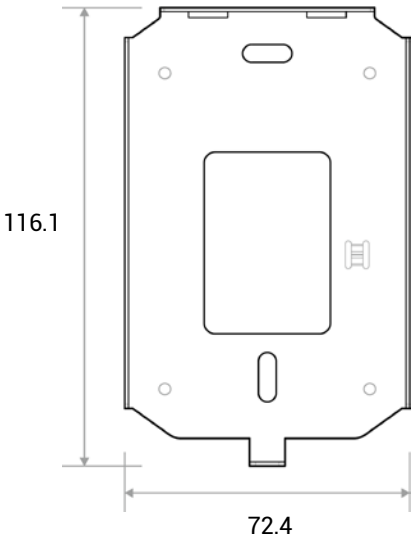

Dimensions

(Unit: mm)
* The tolerance is ±0.3mm.

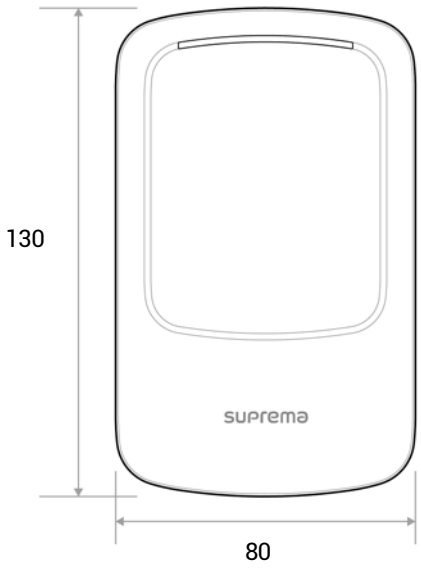

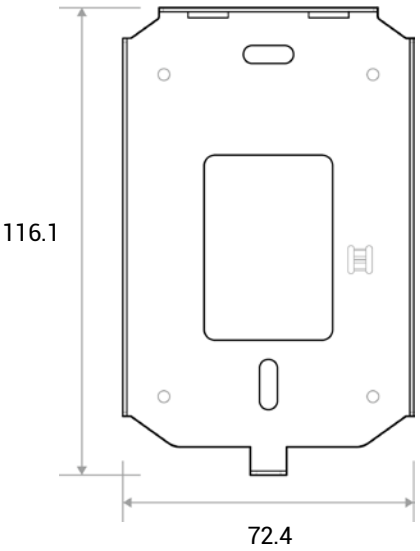

compliance information

Copyright notice

The copyright of this document is vested in Suprema. The rights of other product names, trademarks and registered trademarks are vested in each individual or organization that owns such rights.

Warning & Safety Information

Safety Symbols

Warning

- When encountering this symbol in the manual, you must follow these recommendations to avoid irreparable damage to your car, system or connected devices or to avoid accidents with injuries or death.

IC Information

This device complies with Industry Canada licence-exempt RSS standard(s). Operation is subject to the following two conditions:
(1) this device may not cause interference, and
(2) this device must accept any interference, including interference

Le present appareil est conforme aux CNR d'Industrie Canada applicables aux appareils radio exempts de licence.
L'exploitation est autorisee aux deux conditions suivantes :
(1) l'appareil ne doit pas produire de brouillage, et
(2) l'utilisateur de l'appareil doit accepter tout brouillage radioelectrique subi, meme si le brouillage est susceptible d'en compromettre le fonctionnement.

The antenna(s) used for this device must be installed to provide a separation distance of at least 20 cm from all persons and must not be co-located or operating in conjunction with any other antenna or transmitter.

Cet équipement doit être installé et utilisé avec un minimum de 20 cm de distance entre la source de rayonnement et votre corps.

FCC Information

This device complies with part 15 of the FCC Rules. Operation is subject to the following two conditions:

1. This device may not cause harmful interference, and
2. This device must accept any interference received, including interference that may cause undesired operation.

FCC notification to users

This equipment has been tested and found to comply with the limits for a CLASS B digital device, pursuant to Part 15 of the FCC Rules. These limits are designed to provide reasonable protection against harmful interference when the equipment is operated in a commercial environment. This equipment generates, uses, and can radiate radio frequency energy and, if not installed and used in accordance with the instructions, may cause harmful interference to radio communications. However, there is no guarantee that interference will not occur in a particular installation. If this equipment does cause harmful interference, the user is encouraged to try to correct the interference by consulting with a dealer or an experienced technician for technical assistance.

Any changes or modifications to the equipment not expressly approved by the party responsible for compliance could void user's authority to operate the equipment.

Appendices

Disclaimers

- The information in this manual is provided with regard to the Suprema's products.
- The right to use is acknowledged only for products included in the terms and conditions of the sales agreement guaranteed by Suprema. The right of license to other intellectual property rights not discussed in this manual is not acknowledged.
- Suprema does not guarantee or hold responsibility for the suitability and commerciality of the product for a specific purpose, or the infringement of patent, copyright, or other intellectual property rights with regard to sales or usage of Suprema's products.
- Do not use the product of Suprema under the situations related to medical, rescue of human lives, or maintenance of life, as a person may get injured or lose his/her life due to product malfunction. If an accident occurs while a consumer is using the product under the situations described as examples above, employees, subsidiaries, branches, affiliated companies and distributors of Suprema do not accept responsibility nor will they reimburse for all related direct and indirect expenses or expenditure including attorney fees even if the consumer has discovered any shortcomings in the product design or manufacturing process and claims this as a significant fault.
- Suprema may modify the product size and specifications at any time without proper notice in order to improve the safety, function and design of the product. Designers must keep in mind that functions or descriptions indicated as "to be implemented" or "undefined" may change at any time. Suprema will implement or define such functions or descriptions in the near future and Suprema accepts no responsibility for compatibility issues and any other problems arising from such compatibility issues.
- If you wish to obtain the newest specifications before ordering the product, contact Suprema through a Sales Representative or local distributor of Suprema.

Copyright notice

The copyright of this document is vested in Suprema. The rights of other product names, trademarks and registered trademarks are vested in each individual or organization that owns such rights.

Open Source License

MIT License

Permission is hereby granted, free of charge, to any person obtaining a copy of this software and associated documentation files (the "Software"), to deal in the Software without restriction, including without limitation the rights to use, copy, modify, merge, publish, distribute, sublicense, and/or sell copies of the Software, and to permit persons to whom the Software is furnished to do so, subject to the following conditions:

The above copyright notice and this permission notice shall be included in all copies or substantial portions of the Software.

THE SOFTWARE IS PROVIDED "AS IS", WITHOUT WARRANTY OF ANY KIND, EXPRESS OR IMPLIED, INCLUDING BUT NOT LIMITED TO THE WARRANTIES OF MERCHANTABILITY, FITNESS FOR A PARTICULAR PURPOSE AND NONINFRINGEMENT. IN NO EVENT SHALL THE AUTHORS OR COPYRIGHT HOLDERS BE LIABLE FOR ANY CLAIM, DAMAGES OR OTHER LIABILITY, WHETHER IN AN ACTION OF CONTRACT, TORT OR OTHERWISE, ARISING FROM, OUT OF OR IN CONNECTION WITH THE SOFTWARE OR THE USE OR OTHER DEALINGS IN THE SOFTWARE.

Appendix

Escape clause

- The information in this manual is provided with regard to the Suprema's products.
- The right to use is acknowledged only for products included in the terms and conditions of the sales agreement guaranteed by Suprema. The right of license to other intellectual property rights not discussed in this manual is not acknowledged.
- Suprema does not guarantee or hold responsibility for the suitability and commerciality of the product for a specific purpose, or the infringement of patent, copyright, or other intellectual property rights with regard to sales or usage of Suprema's products.
- Do not use the product of Suprema under the situations related to medical, rescue of human lives, or maintenance of life, as a person may get injured or lose his/her life due to product malfunction. If an accident occurs while a consumer is using the product under the situations described as examples above, employees, subsidiaries, branches, affiliated companies and distributors of Suprema do not accept responsibility nor will they reimburse for all related direct and indirect expenses or expenditure including attorney fees even if the consumer has discovered any shortcomings in the product design or manufacturing process and claims this as a significant fault.
- Suprema may modify the product size and specifications at any time without proper notice in order to improve the safety, function and design of the product. Designers must keep in mind that functions or descriptions indicated as "to be implemented" or "undefined" may change at any time. Suprema will implement or define such functions or descriptions in the near future and Suprema accepts no responsibility for compatibility issues and any other problems arising from such compatibility issues.
- If you wish to obtain the newest specifications before ordering the product, contact Suprema through a Sales Representative or local distributor of Suprema.

Suprema UK.
9 New Street Chambers, 67A New Street, Birmingham, B2 4DU
Tel. +44 (0) 800 368 8123

Suprema Inc.
17F Parkview Tower, 248, Jeongjail-ro, Bundang- gu, Seongnam-si, Gyeonggi-do, 13554, Rep. of KOREA
Tel: +82 31 783 4502 I Fax: +82 31 783 4503 I Inquiry: sales@supremainc.com

©2018 Suprema Inc. Suprema and identifying product names and numbers herein are registered trade marks of Suprema, Inc. All non-Suprema brands and product names are trademarks or registered trademarks of their respective companies. Product appearance, build status and/or specifications are subject to change without notice.