Intertek ETL SEMKO

Successor in interest to International Approval Laboratories

EMC EMISSIONS - TEST REPORT (In-Part)

Test Report No.	**3091658-1**	Issue Date:	**Thursday 4/6/2006**
Model / Serial No.	**MN: Tiamis-800/SN: Sample1 and 2**		
Product Type	**902 to 928 MHz Software defined radio transceiver**		
Client	**LexyCom Technologies, Inc.**		
Manufacturer	**LexyCom Technologies, Inc.**		
License holder	**LexyCom Technologies, Inc.**		
Address	**1227 Reserve Drive**		
	Longmont, CO 80501		
Test Criteria Applied	**FCC CFR47 Part 15.247**		
Test Result	**PASS**		
Test Project Number	**3091658**	Title 47 CFR 15: RADIO FREQUENCY DEVICES	
References			
Total Pages Including Appendices:	55		

Reviewed By : Mike Spataro

Approved By :

INTERTEK ETL SEMKO (ITS) reports apply only to the specific samples tested under stated test conditions. It is the manufacturer's responsibility to assure that additional production units of this model are manufactured with identical electrical and mechanical components. ITS have no liability for any deductions, inferences or generalizations drawn by the client or others from ITS issued reports.

This report is the confidential property of the client. As a mutual protection to our clients, the public and ourselves, extracts from the test report shall not be reproduced except in full without our written approval of ITS. This report shall not be used by the client to claim product endorsement by NVLAP (No. 200624-0) or any agency of the US government.

Intertek ETL Semko and its professional staff hold government and professional organization certifications and are members of IEEE, NVLAP, and VCCI.

Lab Code:200264-0

The entity logos above are for reference only and may not apply to this test report.

DIRECTORY

Documentation	Page(s)
Test report	1 - 55
Directory	2
Test Regulations	3
General Remarks	4 - 5
Letter from Lexycom Technologies Inc.	6
Modification sheets	7 - 8
Test-setup Photographs	9 - 13
Appendix A	
Test Data Sheets and Test Equipment Used	14 - 43
Appendix B	
Test Plan/Constructional Data Form	44 - 50
Appendix C	
Measurement Protocol/Test Procedures	51 - 55

STATEMENT OF MEASUREMENT UNCERTAINTY

The data and results referenced in this document are true and accurate. The measurement uncertainty for Conducted Emissions in the frequency range of 150kHz – 30MHz is calculated to be ±2.30dB and for Radiated Emissions is calculated to be ±3.60dB in the frequency range of 30MHz – 200MHz and ±3.38dB in the frequency range of 200MHz – 1000MHz.

EUT Received Date: 8-Nov-2005

Testing Start Date: 8-Nov-2005

Testing End Date: 10-March-2006

Intertek ETL Semko
5541 Central Avenue, Suite 110
Boulder, Colorado 80301
Voice: 303 786 7999 Fax: 303 449 6160

The tests were performed according to following regulations :

1. FCC CFR47 Part 15.205
2. FCC CFR47 Part 15.207
3. FCC CFR47 Part 15.209
4. FCC CFR47 Part 15.247

Emission Test Results:

Conducted Emissions, Powerline (15.207) - NA

Test Result

Minimum limit margin	_____ dB	at	_____ MHz
Maximum limit exceeding	_____ dB	at	_____ MHz

Remarks: _____

Radiated Emissions (15.209) - PASS

Test Result

Minimum limit margin	-0.4 dB	at	598.06 MHz
Maximum limit exceeding	_____ dB	at	_____ MHz

Remarks: _____

Radiated Emissions (15.205)/(15.247) (c) - PASS

Test Result

Minimum limit margin	-1.4 dB	at	4511.60 MHz
Maximum limit exceeding	_____ dB	at	_____ MHz

Remarks: _____

Peak Output Power 15.247 (b)(3) - NA

Test Result

Minimum limit margin	_____ dB	at	_____ MHz
Maximum limit exceeding	_____ dB	at	_____ MHz

Remarks: _____

Bandwidth 15.247 (a)(2) - NA

Remarks: _____

Intertek ETL Semko
5541 Central Avenue, Suite 110
Boulder, Colorado 80301
Voice: 303 786 7999 Fax: 303 449 6160

Power Spectral Density 15.247 (e) - NA

Remarks:

GENERAL REMARKS:

The following remarks are to be considered as "where applicable" and are taken into account while completing any FCC/IC/ETSI radio tests at Intertek, ETL Semko.

Testing was performed in 3 different orthogonal axis to determine the worst case emissions from the device. The worst case emissions measurements are shown in this report.

FCC CFR47 Part 15.31: Measurement Standards: In any case where the device is powered off a battery, a fresh battery was used during test. In cases where the device is powered off an AC supply, voltage was varied per Part 15.31 to find worst case emissions.

FCC CFR47 Part 15.35: Measurement Detector Functions and Bandwidths: FCC Part 15.35 was utilized when performing the measurements within this report.

Whenever possible the approved test procedures specified in FCC KDB 558074 for DTS devices was used for testing.

This test report is in-part, Interek ETL Semko was asked to test only the harmonics of the fundumental that fall in the restricted bands specified in FCC Part 15.205 and unintentional emissions.

This report contains two sets of data, one for the Tiamis-800 with a 5dB gain rod antenna and one for the Tiamis-800 with a 10dB gain 6 element directional antenna. The first set of data for the rod antenna was completed in November of 2005 under International Approvals laboratories, LLC (IAL). In December of 2005 IAL was purchased by Intertek Testing Services (ITS). The second set of data for the Tiamis-800 with the 10dB gain 6 element directional antenna was completed under ITS.

The Sample2 data was collected without the RF absorber that was added to the board on Sample1, see Modification sheet 1 on page 7. The resistor that was added to Sample1 was incorporated into the board layout for Sample2.

Modifications required to pass: None

Test Specification Deviations: Additions to or Exclusions from: None

Intertek ETL Semko
5541 Central Avenue, Suite 110
Boulder, Colorado 80301
Voice: 303 786 7999 Fax: 303 449 6160

Required Information In Accordance to FCC CFR 47 Part 2.1033:

Rule Part 11, 15 & 18 Devices	*Other Rule Part Devices*	*Description*	*Comments*
2.1033(b)(1)	**2.1033(c)(1)**	*Manu. Contact*	See Page 1 of this report
2.1033(b)(2)	**2.1033(c)(2)**	*FCC Identifier*	
2.1033(b)(3)	**2.1033(c)(3)**	*Users Manual to include Operating, installation*	Attached as Exhibit
	2.1033(c)(4)	*Emissions Designator per 2.*	
	2.1033(c)(5)	*Frequency Range*	Not Applicable to Part 15 Devcies
	2.1033(c)(6)	*Power range and controls*	Not Applicable to Part 15 Devcies
	2.1033(c)(7)	*Maximum power ouput rating*	Not Applicable to Part 15 Devcies
	2.1033(c)(8)	*DC Voltage and Current suplying final RF stages*	Not Applicable to Part 15 Devcies
2.1033(b)(3)	**2.1033(c)(9)**	*Tune –up procedure*	Please refer to the users manual for applicability
2.1033(b)(4&5)	**2.1033(c)(10)**	*Complete Circuit Diagrams and circuit operation description*	Attached as Exhibit
2.1033(b)(7)	**2.1033(c)(11)**	*Photographs/drawings of the identification label & its location on the device*	Attached as Exhibit
2.1033(b)(7)	**2.1033(c)(12)**	*Photographs of the external and internal surfaces, and construction*	Attached as Exhibit
	2.1033(c)(13)	*Digital Modulation*	Not Applicable
2.1033(b)(6)	**2.1033(c)(14)**	*Report of Measurement Data Required by 2.1046 – 2.1057*	See Data Below (This report consists of the testing required under Part 15.231)
2.1033(b)(8)		*Description of publicly available support equipment used during test*	Refer to Exhibit B of this report (Client Test Plan)
2.1033(b)(9)		*Statement of Autorization to Part 15.37 of CFR47*	The equipment herein is being authorized in accordance to 15.37 of the CFR47 Rules.
2.1033(b)(10)		*Direct Sequence Spread Spectrum Devices (DSSS)*	Exhibit of compliance to 15.247(e)
2.1033(b)(10)		*Frequency Hopping Devices*	Exhibit of compliance to 15.247(a)(1)
2.1033(b)(11)		*Scanning receiver construction*	Exhibit stating compliance to construction in accordance to 15.121.
15.31	**15.31**	*Transmitter Supply Voltage*	Testing herein was completed in accordance to FCC CFR47 Part 15.31

Exhibits Including (where applicable):

1. Users Manual
2. Operation Description
3. Block Diagram
4. Report of Measurement
5. External & Internal Photographs
6. Schematic
7. Parts List
8. Tuning Procedure (if applicable)
9. Test Setup Photograph
10. Label Drawings and or Photograpghs
11. Description of Support Equipment (where Applicable)

Required Information in Accordance to Industry Canada Regulations (In addition to the above):

Information Required	*Description*	*Comments*
Modulation Type	(i.e. ASK, NON, FSK, DSSS, FHSS, etc.)	
Emissions Designator	Per TRC-49	
In Country Representative	Contact Information	
99% Bandwidth Measurement	Per RSS-210	

Intertek ETL Semko
5541 Central Avenue, Suite 110
Boulder, Colorado 80301
Voice: 303 786 7999 Fax: 303 449 6160

FROM	Lexycom Technologies, Inc. 1227 Reserve Dr. Longmont CO 80501 Ph (303) 774-7822
TO	International Approvals Laboratories 5541 Central Avenue, Suite 110 Boulder, CO 80301 Ph (303) 402-5243
RE	FCC Part15 compliance testing of the board level Tiamis-800 SDR transceiver. Changes made during the test.

November 21st, 2005

To Whom It May Concern:

With this letter I would like to confirm that the changes made to the transceiver board during the radiated emissions testing (unintentional radiations) on November 18th, 2005 did not affect the transceiver's measurements made previously (intentional radiations).

Sincerely,

Aleksey Pozhidaev
Compliance engineer, Lexycom Technologies, Inc.

Intertek ETL Semko
5541 Central Avenue, Suite 110
Boulder, Colorado 80301
Voice: 303 786 7999 Fax: 303 449 6160

MODIFICATION SHEET

Test Report No.	BC500356	Test Area:	PW-1	Date: 18/Nov/2005		
Test Method	**FCC part 15**	EUT Power:	6VDC			
EUT Model No.	Tiamis-800	Temp: 21.8°C Pressure: 84 kPA Humidity: 33.5 %				
EUT Serial No.	Sample 1					
EUT Mfgr:	Lexycom					
EUT Description:	Software defined radio transceiver					
Tested By:	Mike Spataro					
Data Sheet Reference:	Radiated Unintentional Emissions.doc	Modification No.	1	Photos Taken	1	Page: 7 of 7

Modifications Made:

1. Added 470 Ohm resister on pin ten of U49.
2. Added RF absorber to the backside of the circuit board.

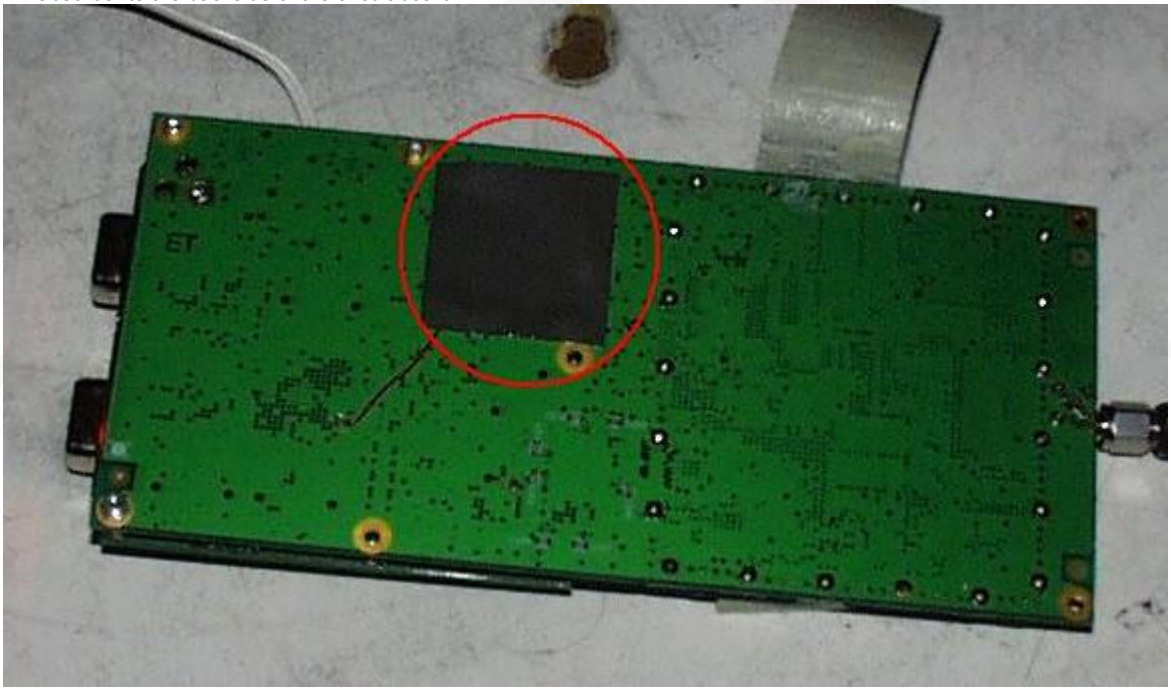

Intertek ETL Semko
5541 Central Avenue, Suite 110
Boulder, Colorado 80301
Voice: 303 786 7999 Fax: 303 449 6160

MODIFICATION SHEET

Test Report No.	3091658	Test Area:	PW-1	Date: 3/Mar/2006		
Test Method	**FCC part 15**	EUT Power:	6VDC			
EUT Model No.	Tiamis-800	Temp: 21.8°C Pressure: 84 kPA Humidity: 33.5 %				
EUT Serial No.	Sample 2					
EUT Mfgr:	Lexycom					
EUT Description:	Software defined radio transceiver					
Tested By:	Jordan Belliston					
Data Sheet Reference:	Radiated Unintentional Emissions.doc	Modification No.	1	Photos Taken	1	Page: 8 of 7

Modifications Made:

1. Added solder to RF shielding

Intertek ETL Semko
5541 Central Avenue, Suite 110
Boulder, Colorado 80301
Voice: 303 786 7999 Fax: 303 449 6160

Test-setup photo(s):
Radiated Emissions: Sample1 with 5dB gain rod antenna.

Intertek ETL Semko
5541 Central Avenue, Suite 110
Boulder, Colorado 80301
Voice: 303 786 7999 Fax: 303 449 6160

Test-setup photo(s):
Radiated Emissions: Sample1 with 5dB gain rod antenna.

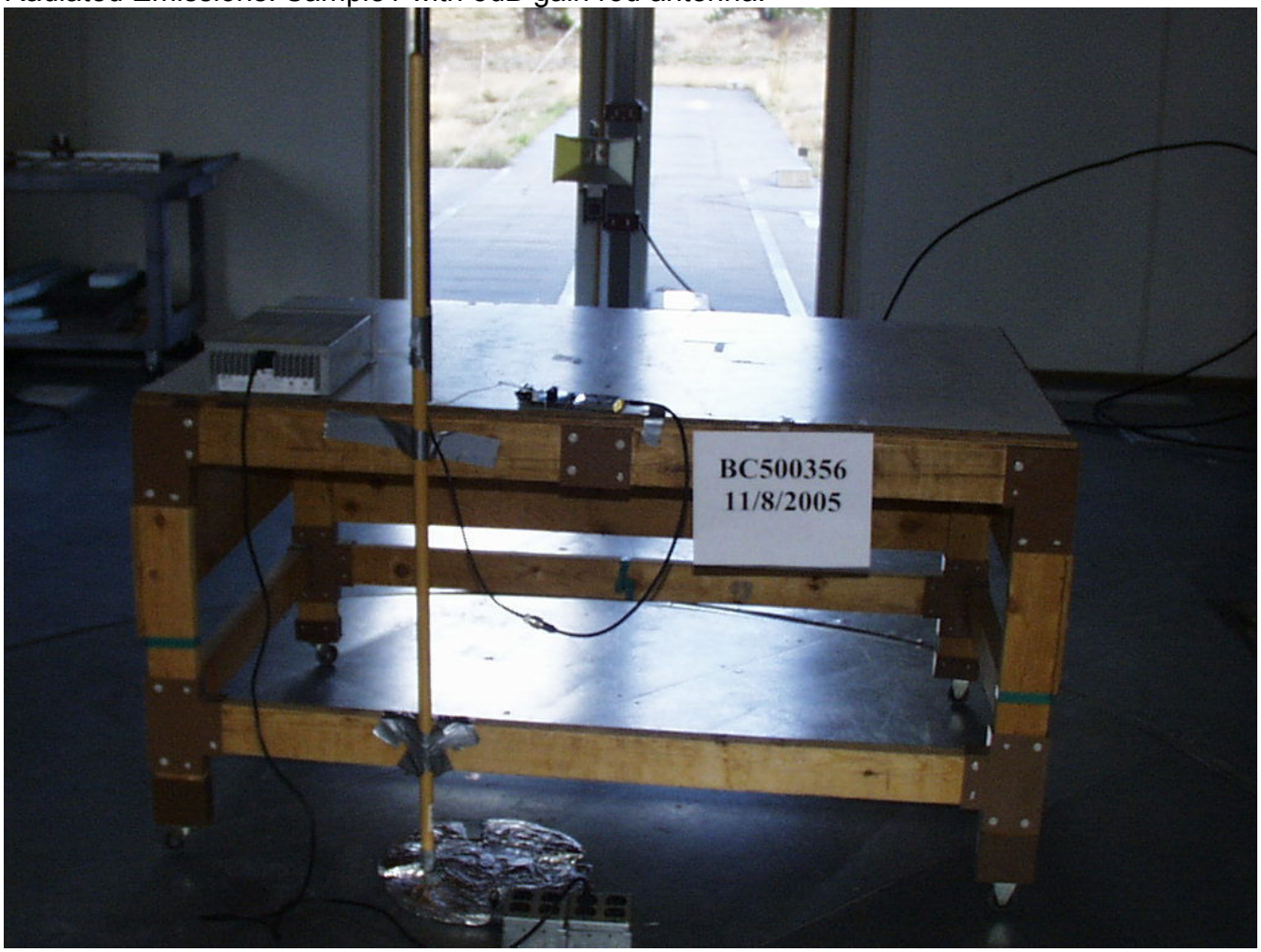

Intertek ETL Semko
5541 Central Avenue, Suite 110
Boulder, Colorado 80301
Voice: 303 786 7999 Fax: 303 449 6160

Test-setup photo(s):
Radiated Emissions: Sample2 with 10dB gain 6 element directional antenna.

Intertek ETL Semko
5541 Central Avenue, Suite 110
Boulder, Colorado 80301
Voice: 303 786 7999 Fax: 303 449 6160

Test-setup photo(s):
Radiated Emissions: Sample2 with 10dB gain 6 element directional antenna.

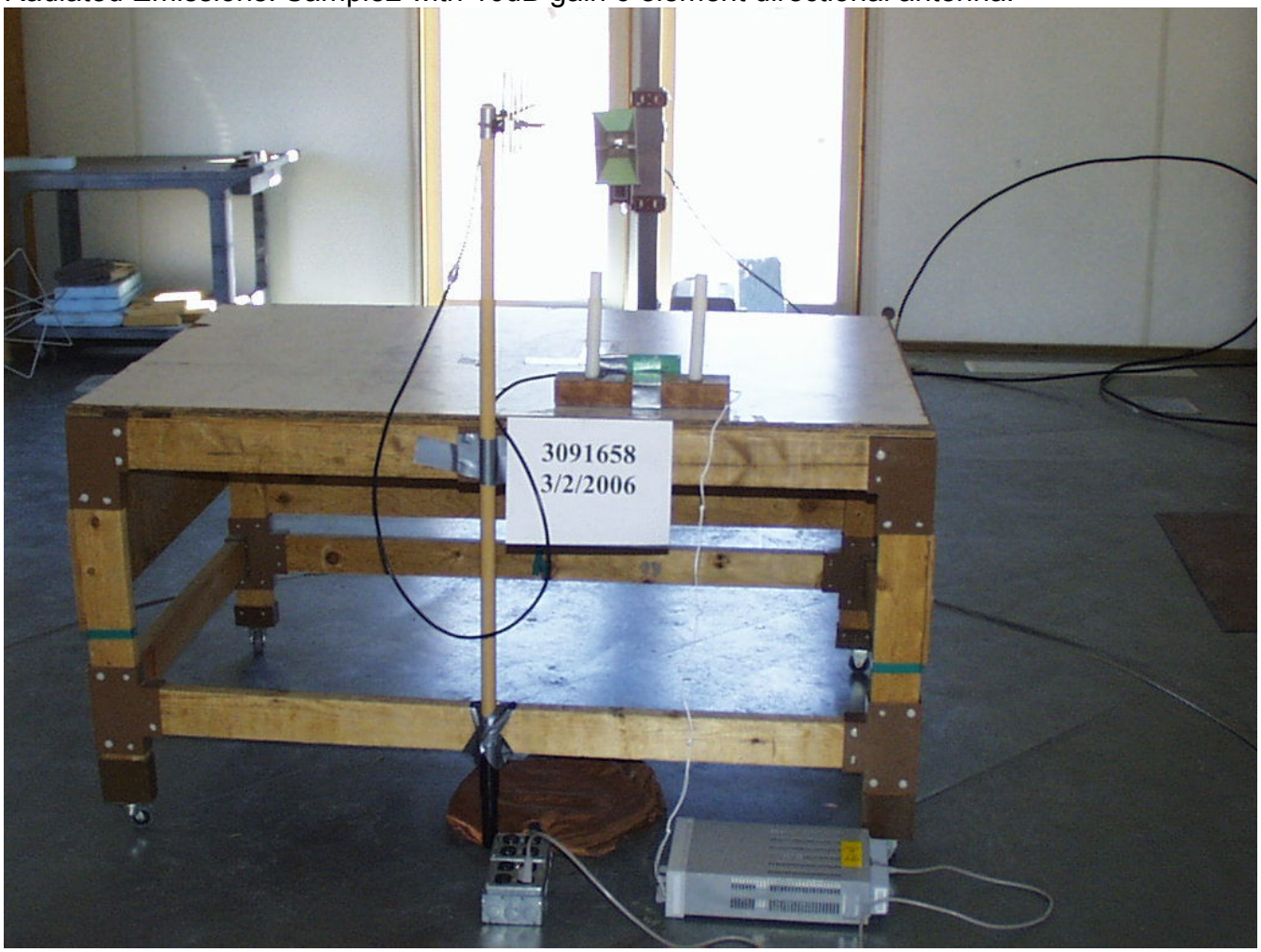

Intertek ETL Semko
5541 Central Avenue, Suite 110
Boulder, Colorado 80301
Voice: 303 786 7999 Fax: 303 449 6160

Test-setup photo(s):
Radiated Emissions: Sample2 with 10dB gain 6 element directional antenna. Without RF absorber on the back of the circuit board.

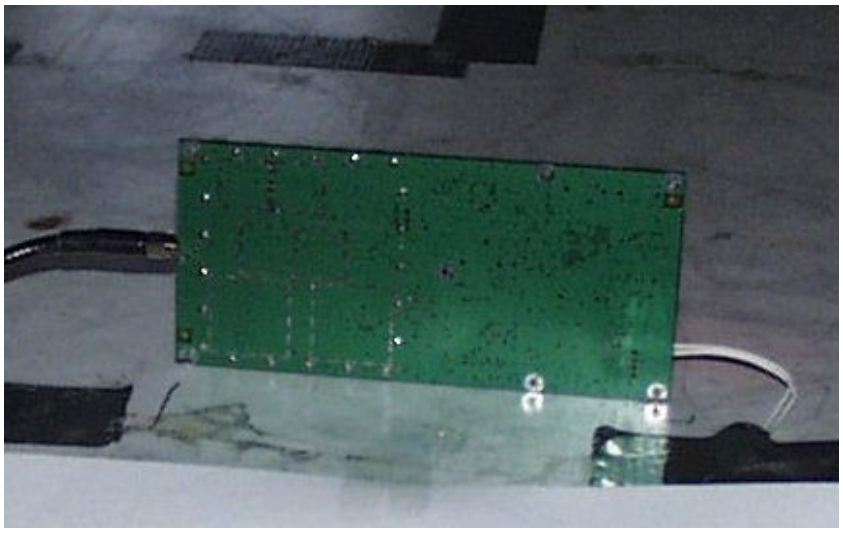

Intertek ETL Semko
5541 Central Avenue, Suite 110
Boulder, Colorado 80301
Voice: 303 786 7999 Fax: 303 449 6160

Appendix A

Test Data Sheets

and

Test Equipment Used

Intertek ETL Semko
5541 Central Avenue, Suite 110
Boulder, Colorado 80301
Voice: 303 786 7999 Fax: 303 449 6160

15.209 Test Data

Unintentional Emissions

Sample1 with 5dB gain rod antenna.

Intertek ETL Semko
5541 Central Avenue, Suite 110
Boulder, Colorado 80301
Voice: 303 786 7999 Fax: 303 449 6160

Radiated Electromagnetic Emissions

Test Report #:	**BC500356 Run 04**	Test Area:	Pinewood Site 1 (3m)	Temperature:	20.5	°C
Test Method:	FCC Part 15.209	Test Date:	18-Nov-2005	Relative Humidity:	36	%
EUT Model #:	TIAMIS-800	EUT Power:	6VDC	Air Pressure:	80	kPa
EUT Serial #:	Sample 1			Page:		
Manufacturer:	Lexycom					
EUT Description:	Software defined radio transceiver					
Notes:	902 to 928 MHz frequency hopping 1 watt radio.					

Level Key	
Pk – Peak	Nb – Narrow Band
Qp – QuasiPeak	Bb – Broad Band
Av - Average	

FREQ (MHz)	LEVEL (dBuV)	CABLE / ANT / PREAMP (dB) (dB\m) (dB)	FINAL (dBuV)	POL / HGT / AZ (m) (DEG)	DELTA1 (dB) 15.209 <1GHz	DELTA2 (dB) 15.209 >1GHz
234.06	36.6 Qp	1.7 / 11.4 / 26.3	23.3	V / 1.0 / 0.0	-22.7	N/A
312.05	38.1 Qp	1.9 / 15.3 / 26.8	28.5	V / 1.0 / 0.0	-17.5	N/A
390.05	34.9 Qp	2.2 / 15.9 / 27.7	25.2	V / 1.0 / 0.0	-20.8	N/A
468.05	46.3 Qp	2.5 / 17.8 / 28.2	38.4	V / 1.0 / 0.0	-7.6	N/A
520.05	46.1 Qp	2.6 / 19.1 / 28.4	39.4	V / 1.0 / 0.0	-6.6	N/A
546.06	43.6 Qp	2.6 / 19.2 / 28.4	37.0	V / 1.0 / 0.0	-9.0	N/A
624.05	50.6 Qp	3.0 / 19.7 / 28.4	44.9	V / 1.0 / 0.0	-1.1	N/A
644.37	47.1 Qp	3.0 / 20.1 / 28.4	41.8	V / 1.0 / 0.0	-4.2	N/A
702.05	40.4 Qp	3.3 / 21.6 / 28.2	37.0	V / 1.0 / 0.0	-9.0	N/A
786.06	41.8 Qp	3.3 / 21.5 / 28.0	38.6	V / 1.0 / 0.0	-7.4	N/A
789.43	34.1 Qp	3.3 / 21.6 / 27.9	31.1	V / 1.0 / 0.0	-14.9	N/A
827.11	41.3 Qp	3.3 / 22.0 / 28.0	38.7	V / 1.0 / 0.0	-7.3	N/A
832.07	38.9 Qp	3.4 / 22.2 / 28.0	36.4	V / 1.0 / 0.0	-9.6	N/A
836.37	38.5 Qp	3.4 / 22.1 / 27.9	36.1	V / 1.0 / 0.0	-9.9	N/A
841.68	43.0 Qp	3.4 / 22.3 / 27.8	40.9	V / 1.0 / 0.0	-5.1	N/A
997.69	34.0 Qp	3.7 / 23.9 / 27.3	34.4	V / 1.0 / 0.0	-19.6	N/A
208.05	42.4 Qp	1.5 / 11.4 / 26.2	29.1	V / 1.0 / 0.0	-14.4	N/A
260.06	38.5 Qp	1.8 / 12.8 / 26.5	26.6	V / 1.0 / 0.0	-19.4	N/A
338.06	40.0 Qp	2.0 / 14.9 / 27.1	29.8	V / 1.0 / 0.0	-16.2	N/A
450.22	41.4 Qp	2.4 / 17.2 / 28.1	33.0	V / 1.0 / 0.0	-13.0	N/A
598.06	44.3 Qp	2.9 / 19.5 / 28.4	38.3	V / 1.0 / 0.0	-7.7	N/A
650.07	47.5 Qp	3.0 / 20.2 / 28.4	42.4	V / 1.0 / 0.0	-3.6	N/A
676.06	36.0 Qp	3.1 / 21.2 / 28.2	32.1	V / 1.0 / 0.0	-13.9	N/A
780.05	40.2 Qp	3.3 / 21.5 / 28.0	36.9	V / 1.0 / 0.0	-9.1	N/A
234.06	37.4 Qp	1.7 / 11.4 / 26.3	24.1	V / 1.0 / 90.0	-21.9	N/A
390.05	41.7 Qp	2.2 / 15.9 / 27.7	32.0	V / 1.0 / 90.0	-14.0	N/A
468.05	47.8 Qp	2.5 / 17.8 / 28.2	39.8	V / 1.0 / 90.0	-6.2	N/A
598.06	46.1 Qp	2.9 / 19.5 / 28.4	40.1	V / 1.0 / 90.0	-5.9	N/A
624.05	53.6 Qp	3.0 / 19.7 / 28.4	47.9	V / 1.0 / 90.0	1.9 *	N/A

Intertek ETL Semko
5541 Central Avenue, Suite 110
Boulder, Colorado 80301
Voice: 303 786 7999 Fax: 303 449 6160

FREQ	LEVEL	CABLE / ANT / PREAMP	FINAL	POL / HGT / AZ	DELTA1 (dB)	DELTA2 (dB)
(MHz)	(dBuV)	(dB) (dB\m) (dB)	(dBuV)	(m) (DEG)	15.209 <1GHz	15.209 >1GHz
624.05	55.8 Qp	3.0 / 19.7 / 28.4	50.1	V / 1.1 / 90.0	4.1 *	N/A
BCL circuit disabled.						
624.05	47.0 Qp	3.0 / 19.7 / 28.4	41.3	V / 1.1 / 90.0	-4.7	N/A
676.06	39.4 Qp	3.1 / 21.2 / 28.2	35.5	V / 1.0 / 90.0	-10.5	N/A
780.05	49.0 Qp	3.3 / 21.5 / 28.0	45.6	V / 1.0 / 90.0	-0.4	N/A
234.06	39.9 Qp	1.7 / 11.4 / 26.3	26.6	V / 1.0 / 180.0	-19.4	N/A
260.06	39.0 Qp	1.8 / 12.8 / 26.5	27.0	V / 1.0 / 180.0	-19.0	N/A
312.05	40.1 Qp	1.9 / 15.3 / 26.8	30.5	V / 1.0 / 180.0	-15.5	N/A
520.05	45.6 Qp	2.6 / 19.1 / 28.4	39.0	V / 1.0 / 180.0	-7.0	N/A
997.69	37.1 Qp	3.7 / 23.9 / 27.3	37.5	V / 1.0 / 180.0	-16.5	N/A
786.06	42.0 Qp	3.3 / 21.5 / 28.0	38.9	V / 1.0 / 270.0	-7.1	N/A
827.11	44.2 Qp	3.3 / 22.0 / 28.0	41.6	V / 1.0 / 270.0	-4.4	N/A
832.07	40.5 Qp	3.4 / 22.2 / 28.0	38.1	V / 1.0 / 270.0	-7.9	N/A
832.07	40.5 Qp	3.4 / 22.2 / 28.0	38.1	V / 1.0 / 270.0	-7.9	N/A
572.05	47.0 Pk	2.8 / 19.4 / 28.4	40.8	V / 1.0 / 270.0	-5.2	N/A
The following were maxmized between 200 and 1000 MHz.						
841.68	47.3 Qp	3.4 / 22.3 / 27.8	45.2	V / 1.7 / 0.0	-0.8	N/A
827.11	46.5 Qp	3.3 / 22.0 / 28.0	43.9	V / 1.7 / 130.0	-2.1	N/A
780.05	48.8 Qp	3.3 / 21.5 / 28.0	45.5	V / 1.7 / 90.0	-0.5	N/A
644.37	50.5 Qp	3.0 / 20.1 / 28.4	45.1	V / 2.0 / 233.0	-0.9	N/A
208.05	44.5 Qp	1.5 / 11.4 / 26.2	31.2	H / 1.6 / 0.0	-12.3	N/A
260.06	46.2 Qp	1.8 / 12.8 / 26.5	34.3	H / 1.6 / 0.0	-11.7	N/A
312.05	48.7 Qp	1.9 / 15.3 / 26.8	39.1	H / 1.6 / 0.0	-6.9	N/A
468.05	50.6 Qp	2.5 / 17.8 / 28.2	42.7	H / 1.6 / 0.0	-3.3	N/A
520.05	52.4 Qp	2.6 / 19.1 / 28.4	45.7	H / 1.6 / 0.0	-0.3	N/A
546.06	44.1 Qp	2.6 / 19.2 / 28.4	37.6	H / 1.6 / 0.0	-8.4	N/A
416.06	42.0 Qp	2.3 / 16.4 / 27.9	32.8	H / 2.0 / 0.0	-13.2	N/A
780.05	43.6 Qp	3.3 / 21.5 / 28.0	40.3	H / 2.0 / 90.0	-5.7	N/A
780.05	44.8 Qp	3.3 / 21.5 / 28.0	41.5	H / 1.6 / 90.0	-4.5	N/A
260.06	46.8 Qp	1.8 / 12.8 / 26.5	34.9	H / 1.6 / 90.0	-11.1	N/A
546.06	44.4 Qp	2.6 / 19.2 / 28.4	37.8	H / 1.6 / 180.0	-8.2	N/A
572.05	43.9 Qp	2.8 / 19.4 / 28.4	37.7	H / 1.6 / 180.0	-8.3	N/A
598.06	40.5 Qp	2.9 / 19.5 / 28.4	34.5	H / 1.6 / 180.0	-11.5	N/A
624.05	43.0 Qp	3.0 / 19.7 / 28.4	37.3	H / 1.6 / 180.0	-8.7	N/A
780.05	44.6 Qp	3.3 / 21.5 / 28.0	41.3	H / 1.6 / 180.0	-4.7	N/A
416.06	42.5 Qp	2.3 / 16.4 / 27.9	33.4	H / 2.0 / 270.0	-12.6	N/A

Intertek ETL Semko
5541 Central Avenue, Suite 110
Boulder, Colorado 80301
Voice: 303 786 7999 Fax: 303 449 6160

FREQ	LEVEL	CABLE / ANT / PREAMP	FINAL	POL / HGT / AZ	DELTA1 (dB)	DELTA2 (dB)
(MHz)	(dBuV)	(dB) (dB\m) (dB)	(dBuV)	(m) (DEG)	15.209 <1GHz	15.209 >1GHz
468.05	49.4 Qp	2.5 / 17.8 / 28.2	41.5	H / 2.0 / 270.0	-4.5	N/A
468.05	48.4 Qp	2.5 / 17.8 / 28.2	40.5	H / 1.6 / 270.0	-5.5	N/A
260.06	45.5 Qp	1.8 / 12.8 / 26.5	33.6	H / 1.6 / 270.0	-12.4	N/A
208.05	43.3 Qp	1.5 / 11.4 / 26.2	30.0	H / 1.6 / 270.0	-13.5	N/A
The following were maximized between 200 and 1000 MHz.						
780.05	47.4 Qp	3.3 / 21.5 / 28.0	44.0	H / 1.7 / 168.0	-2.0	N/A
468.05	53.1 Qp	2.5 / 17.8 / 28.2	45.2	H / 1.7 / 347.0	-0.8	N/A
520.05	56.4 Qp	2.6 / 19.1 / 28.4	49.7	H / 1.4 / 329.0	3.7 *	N/A
Added 470 Ohm resister in series with 26MHz clk line going to DDS.						
520.05	48.2 Qp	2.6 / 19.1 / 28.4	41.5	H / 1.4 / 329.0	-4.5	N/A
624.05	53.7 Qp	3.0 / 19.7 / 28.4	48.0	H / 1.4 / 330.0	2.0 *	N/A
Removed series resister from clk line to DDS.						
Added 470 Ohm resister on pin ten of U49.						
520.05	52.1 Qp	2.6 / 19.1 / 28.4	45.4	H / 1.4 / 330.0	-0.6	N/A
624.05	46.6 Qp	3.0 / 19.7 / 28.4	40.9	H / 1.4 / 304.0	-5.1	N/A
468.05	48.9 Qp	2.5 / 17.8 / 28.2	40.9	H / 1.4 / 351.0	-5.1	N/A
260.06	47.4 Qp	1.8 / 12.8 / 26.5	35.5	H / 1.2 / 314.0	-10.5	N/A
780.05	51.6 Qp	3.3 / 21.5 / 28.0	48.3	H / 1.2 / 359.0	2.3 *	N/A
780.05	48.1 Qp	3.3 / 21.5 / 28.0	44.8	V / 1.0 / 83.0	-1.2	N/A
260.06	52.6 Qp	1.8 / 12.8 / 26.5	40.7	V / 1.0 / 348.0	-5.3	N/A
Added RF absorber to the backside of the circuit board.						
780.05	43.8 Qp	3.3 / 21.5 / 28.0	40.5	V / 1.2 / 348.0	-5.5	N/A
520.05	50.8 Qp	2.6 / 19.1 / 28.4	44.1	V / 1.5 / 348.0	-1.9	N/A
36.11	37.2 Qp	0.6 / 12.3 / 16.7	33.4	V / 1.0 / 0.0	-6.6	N/A
42.71	38.1 Qp	0.7 / 11.3 / 17.7	32.4	V / 1.0 / 0.0	-7.6	N/A
75.14	40.8 Qp	0.9 / 7.8 / 21.9	27.5	V / 1.0 / 0.0	-12.5	N/A
134.59	40.6 Qp	1.3 / 12.5 / 24.9	29.5	V / 1.0 / 0.0	-14.0	N/A
138.51	37.5 Qp	1.3 / 12.6 / 25.1	26.3	V / 1.0 / 0.0	-17.2	N/A
141.89	39.9 Qp	1.3 / 12.5 / 25.2	28.5	V / 1.0 / 0.0	-15.0	N/A
No higher emissions found: 90Deg, Vertical.						
141.89	40.9 Qp	1.3 / 12.5 / 25.2	29.5	V / 1.0 / 180.0	-14.0	N/A
75.14	42.2 Qp	0.9 / 7.8 / 21.9	29.0	V / 1.0 / 270.0	-11.0	N/A
141.89	40.0 Qp	1.3 / 12.5 / 25.2	28.7	V / 1.0 / 270.0	-14.8	N/A
The following were maximized between 30 and 200 MHz.						

Intertek ETL Semko
5541 Central Avenue, Suite 110
Boulder, Colorado 80301
Voice: 303 786 7999 Fax: 303 449 6160

FREQ	LEVEL	CABLE / ANT / PREAMP	FINAL	POL / HGT / AZ	DELTA1 (dB)	DELTA2 (dB)
(MHz)	(dBuV)	(dB) (dB\m) (dB)	(dBuV)	(m) (DEG)	15.209 <1GHz	15.209 >1GHz
36.11	38.9 Qp	0.6 / 12.3 / 16.7	35.1	V / 1.0 / 256.0	-4.9	N/A
75.14	44.1 Qp	0.9 / 7.8 / 21.9	30.9	V / 1.7 / 288.0	-9.1	N/A
No higher emissions found: 0Deg, Horizontal.						
No higher emissions found: 90Deg, Horizontal.						
No higher emissions found: 180Deg, Horizontal.						
No higher emissions found: 270Deg, Horizontal.						
Noise floor						
30.00	26.2 Qp	0.5 / 13.1 / 15.4	24.4	H / 2.0 / 0.0	-15.6	N/A
80.00	30.8 Qp	0.9 / 7.0 / 22.3	16.4	H / 2.0 / 0.0	-23.6	N/A
195.00	26.4 Qp	1.5 / 13.8 / 26.2	15.5	H / 2.0 / 0.0	-28.0	N/A
No emissions seen between 26 and 30 MHz.						
1004.80	40.5 Av	2.2 / 22.0 / 37.6	27.1	V / 1.0 / 0.0	N/A	-26.9
1014.06	48.3 Av	2.2 / 22.0 / 37.6	35.0	V / 1.0 / 0.0	N/A	-19.0
1028.25	47.3 Av	2.2 / 22.1 / 37.6	34.0	V / 1.0 / 0.0	N/A	-20.0
1040.04	41.5 Av	2.3 / 22.1 / 37.6	28.3	V / 1.0 / 0.0	N/A	-25.7
1066.06	43.3 Av	2.3 / 22.2 / 37.7	30.1	V / 1.0 / 0.0	N/A	-23.9
1069.69	48.1 Av	2.3 / 22.2 / 37.7	35.0	V / 1.0 / 0.0	N/A	-19.0
1242.65	43.9 Av	2.5 / 22.8 / 37.7	31.5	V / 1.0 / 0.0	N/A	-22.5
1300.06	43.2 Av	2.6 / 23.0 / 37.7	31.1	V / 1.0 / 0.0	N/A	-22.9
1069.69	49.1 Av	2.3 / 22.2 / 37.7	36.0	V / 1.0 / 90.0	N/A	-18.0
1066.06	43.9 Av	2.3 / 22.2 / 37.7	30.7	V / 1.0 / 90.0	N/A	-23.3
1014.06	52.4 Av	2.2 / 22.0 / 37.6	39.0	V / 1.0 / 180.0	N/A	-15.0
1028.25	48.6 Av	2.2 / 22.1 / 37.6	35.4	V / 1.0 / 180.0	N/A	-18.6
1040.04	48.0 Av	2.3 / 22.1 / 37.6	34.8	V / 1.0 / 180.0	N/A	-19.2
1066.06	44.0 Av	2.3 / 22.2 / 37.7	30.9	V / 1.0 / 180.0	N/A	-23.1
1069.69	49.5 Av	2.3 / 22.2 / 37.7	36.4	V / 1.0 / 180.0	N/A	-17.6
1170.07	43.5 Av	2.4 / 22.6 / 37.8	30.8	V / 1.0 / 180.0	N/A	-23.2
2080.06	37.2 Av	3.3 / 26.0 / 37.5	29.1	V / 1.0 / 180.0	N/A	-24.9
1300.06	44.1 Av	2.6 / 23.0 / 37.7	32.0	V / 1.0 / 270.0	N/A	-22.0
The following were maximized between 1 and 4 GHz.						
1014.06	53.7 Av	2.2 / 22.0 / 37.6	40.4	V / 2.0 / 136.0	N/A	-13.6
1028.25	50.1 Av	2.2 / 22.1 / 37.6	36.9	V / 1.7 / 10.0	N/A	-17.1
1069.69	56.7 Av	2.3 / 22.2 / 37.7	43.6	V / 2.1 / 353.0	N/A	-10.4
2080.06	45.0 Av	3.3 / 26.0 / 37.5	36.8	V / 1.0 / 224.0	N/A	-17.2
1014.06	58.0 Av	2.2 / 22.0 / 37.6	44.7	H / 1.0 / 0.0	N/A	-9.3
2080.06	38.0 Av	3.3 / 26.0 / 37.5	29.9	H / 1.0 / 0.0	N/A	-24.1
1033.56	48.6 Av	2.2 / 22.1 / 37.6	35.4	H / 1.0 / 0.0	N/A	-18.6
1053.06	49.7 Av	2.3 / 22.2 / 37.7	36.5	H / 1.0 / 0.0	N/A	-17.5

Intertek ETL Semko
5541 Central Avenue, Suite 110
Boulder, Colorado 80301
Voice: 303 786 7999 Fax: 303 449 6160

FREQ	LEVEL	CABLE / ANT / PREAMP	FINAL	POL / HGT / AZ	DELTA1 (dB)	DELTA2 (dB)
(MHz)	(dBuV)	(dB) (dB\m) (dB)	(dBuV)	(m) (DEG)	15.209 <1GHz	15.209 >1GHz
1092.06	51.5 Av	2.3 / 22.3 / 37.7	38.5	H / 1.0 / 0.0	N/A	-15.5
1560.05	44.2 Av	2.9 / 23.9 / 37.1	34.0	H / 1.0 / 0.0	N/A	-20.0
No higher emissions found: 90Deg, Horizontal.						
No higher emissions found: 180Deg, Horizontal.						
No higher emissions found: 270Deg, Horizontal.						
The following were maximized between 1 and 4 GHz.						
1014.06	59.8 Av	2.2 / 22.0 / 37.6	46.5	H / 1.0 / 329.0	N/A	-7.5
1092.06	52.8 Av	2.3 / 22.3 / 37.7	39.8	H / 1.0 / 350.0	N/A	-14.2
No emissions found: 4 to 8 GHz Horizontal.						
Noise floor.						
7500.00	31.2 Av	8.2 / 34.2 / 39.9	33.7	H / 1.0 / 0.0	N/A	-20.3
No emissions found: 4 to 8 GHz Vertical.						
Noise floor.						
8000.00	31.6 Av	8.3 / 34.3 / 40.6	33.6	V / 1.0 / 0.0	N/A	-20.4
No emissions found: 8 to 10 GHz Vertical.						
Noise floor.						
9500.00	43.1 Av	9.4 / 35.6 / 48.8	39.3	V / 1.0 / 0.0	N/A	-14.7
No emissions found: 8 to 10 GHz Horizontal.						
Noise floor.						
10003.0	44.1 Av	9.5 / 35.4 / 48.6	40.4	V / 1.0 / 0.0	N/A	-13.6

Intertek ETL Semko
5541 Central Avenue, Suite 110
Boulder, Colorado 80301
Voice: 303 786 7999 Fax: 303 449 6160

FREQ	LEVEL	CABLE / ANT / PREAMP	FINAL	POL / HGT / AZ	DELTA1 (dB)	DELTA2 (dB)
(MHz)	(dBuV)	(dB) (dB\m) (dB)	(dBuV)	(m) (DEG)	15.209 <1GHz	15.209 >1GHz
********** Measurement Summary **********						
520.05	52.1 Qp	2.6 / 19.1 / 28.4	45.4	H / 1.4 / 330.0	-0.6	N/A
841.68	47.3 Qp	3.4 / 22.3 / 27.8	45.2	V / 1.7 / 0.0	-0.8	N/A
644.37	50.5 Qp	3.0 / 20.1 / 28.4	45.1	V / 2.0 / 233.0	-0.9	N/A
827.11	46.5 Qp	3.3 / 22.0 / 28.0	43.9	V / 1.7 / 130.0	-2.1	N/A
650.07	47.5 Qp	3.0 / 20.2 / 28.4	42.4	V / 1.0 / 0.0	-3.6	N/A
36.11	38.9 Qp	0.6 / 12.3 / 16.7	35.1	V / 1.0 / 256.0	-4.9	N/A
468.05	48.9 Qp	2.5 / 17.8 / 28.2	40.9	H / 1.4 / 351.0	-5.1	N/A
624.05	46.6 Qp	3.0 / 19.7 / 28.4	40.9	H / 1.4 / 304.0	-5.1	N/A
572.05	47.0 Pk	2.8 / 19.4 / 28.4	40.8	V / 1.0 / 270.0	-5.2	N/A
260.06	52.6 Qp	1.8 / 12.8 / 26.5	40.7	V / 1.0 / 348.0	-5.3	N/A
780.05	43.8 Qp	3.3 / 21.5 / 28.0	40.5	V / 1.2 / 348.0	-5.5	N/A
598.06	46.1 Qp	2.9 / 19.5 / 28.4	40.1	V / 1.0 / 90.0	-5.9	N/A
312.05	48.7 Qp	1.9 / 15.3 / 26.8	39.1	H / 1.6 / 0.0	-6.9	N/A
786.06	42.0 Qp	3.3 / 21.5 / 28.0	38.9	V / 1.0 / 270.0	-7.1	N/A
1014.06	59.8 Av	2.2 / 22.0 / 37.6	46.5	H / 1.0 / 329.0	N/A	-7.5
42.71	38.1 Qp	0.7 / 11.3 / 17.7	32.4	V / 1.0 / 0.0	-7.6	N/A
832.07	40.5 Qp	3.4 / 22.2 / 28.0	38.1	V / 1.0 / 270.0	-7.9	N/A
546.06	44.4 Qp	2.6 / 19.2 / 28.4	37.8	H / 1.6 / 180.0	-8.2	N/A
702.05	40.4 Qp	3.3 / 21.6 / 28.2	37.0	V / 1.0 / 0.0	-9.0	N/A
75.14	44.1 Qp	0.9 / 7.8 / 21.9	30.9	V / 1.7 / 288.0	-9.1	N/A
836.37	38.5 Qp	3.4 / 22.1 / 27.9	36.1	V / 1.0 / 0.0	-9.9	N/A
1069.69	56.7 Av	2.3 / 22.2 / 37.7	43.6	V / 2.1 / 353.0	N/A	-10.4
676.06	39.4 Qp	3.1 / 21.2 / 28.2	35.5	V / 1.0 / 90.0	-10.5	N/A
208.05	44.5 Qp	1.5 / 11.4 / 26.2	31.2	H / 1.6 / 0.0	-12.3	N/A
416.06	42.5 Qp	2.3 / 16.4 / 27.9	33.4	H / 2.0 / 270.0	-12.6	N/A
450.22	41.4 Qp	2.4 / 17.2 / 28.1	33.0	V / 1.0 / 0.0	-13.0	N/A
10003.0	44.1 Av	9.5 / 35.4 / 48.6	40.4	V / 1.0 / 0.0	N/A	-13.6
134.59	40.6 Qp	1.3 / 12.5 / 24.9	29.5	V / 1.0 / 0.0	-14.0	N/A
141.89	40.9 Qp	1.3 / 12.5 / 25.2	29.5	V / 1.0 / 180.0	-14.0	N/A
390.05	41.7 Qp	2.2 / 15.9 / 27.7	32.0	V / 1.0 / 90.0	-14.0	N/A
1092.06	52.8 Av	2.3 / 22.3 / 37.7	39.8	H / 1.0 / 350.0	N/A	-14.2
9500.00	43.1 Av	9.4 / 35.6 / 48.8	39.3	V / 1.0 / 0.0	N/A	-14.7
789.43	34.1 Qp	3.3 / 21.6 / 27.9	31.1	V / 1.0 / 0.0	-14.9	N/A
30.00	26.2 Qp	0.5 / 13.1 / 15.4	24.4	H / 2.0 / 0.0	-15.6	N/A
338.06	40.0 Qp	2.0 / 14.9 / 27.1	29.8	V / 1.0 / 0.0	-16.2	N/A
997.69	37.1 Qp	3.7 / 23.9 / 27.3	37.5	V / 1.0 / 180.0	-16.5	N/A
1028.25	50.1 Av	2.2 / 22.1 / 37.6	36.9	V / 1.7 / 10.0	N/A	-17.1
138.51	37.5 Qp	1.3 / 12.6 / 25.1	26.3	V / 1.0 / 0.0	-17.2	N/A
2080.06	45.0 Av	3.3 / 26.0 / 37.5	36.8	V / 1.0 / 224.0	N/A	-17.2
1053.06	49.7 Av	2.3 / 22.2 / 37.7	36.5	H / 1.0 / 0.0	N/A	-17.5
1033.56	48.6 Av	2.2 / 22.1 / 37.6	35.4	H / 1.0 / 0.0	N/A	-18.6
1040.04	48.0 Av	2.3 / 22.1 / 37.6	34.8	V / 1.0 / 180.0	N/A	-19.2
234.06	39.9 Qp	1.7 / 11.4 / 26.3	26.6	V / 1.0 / 180.0	-19.4	N/A
1560.05	44.2 Av	2.9 / 23.9 / 37.1	34.0	H / 1.0 / 0.0	N/A	-20.0

Intertek ETL Semko
5541 Central Avenue, Suite 110
Boulder, Colorado 80301
Voice: 303 786 7999 Fax: 303 449 6160

FREQ	LEVEL	CABLE / ANT / PREAMP	FINAL	POL / HGT / AZ	DELTA1 (dB)	DELTA2 (dB)
(MHz)	(dBuV)	(dB) (dB\m) (dB)	(dBuV)	(m) (DEG)	15.209 <1GHz	15.209 >1GHz
7500.00	31.2 Av	8.2 / 34.2 / 39.9	33.7	H / 1.0 / 0.0	N/A	-20.3
8000.00	31.6 Av	8.3 / 34.3 / 40.6	33.6	V / 1.0 / 0.0	N/A	-20.4
1300.06	44.1 Av	2.6 / 23.0 / 37.7	32.0	V / 1.0 / 270.0	N/A	-22.0
1242.65	43.9 Av	2.5 / 22.8 / 37.7	31.5	V / 1.0 / 0.0	N/A	-22.5
1066.06	44.0 Av	2.3 / 22.2 / 37.7	30.9	V / 1.0 / 180.0	N/A	-23.1
1170.07	43.5 Av	2.4 / 22.6 / 37.8	30.8	V / 1.0 / 180.0	N/A	-23.2
80.00	30.8 Qp	0.9 / 7.0 / 22.3	16.4	H / 2.0 / 0.0	-23.6	N/A
1004.80	40.5 Av	2.2 / 22.0 / 37.6	27.1	V / 1.0 / 0.0	N/A	-26.9
195.00	26.4 Qp	1.5 / 13.8 / 26.2	15.5	H / 2.0 / 0.0	-28.0	N/A

Intertek ETL Semko
5541 Central Avenue, Suite 110
Boulder, Colorado 80301
Voice: 303 786 7999 Fax: 303 449 6160

15.209 Test Data

Unintentional Emissions

Sample2 with 10dB gain 6 element directional antenna.

Intertek ETL Semko
5541 Central Avenue, Suite 110
Boulder, Colorado 80301
Voice: 303 786 7999 Fax: 303 449 6160

Radiated Electromagnetic Emissions

Test Report #:	**3091658 Run 1**	Test Area:	Pinewood Site 1 (3m)	Temperature:	°C
Test Method:	FCC Part 15.209	Test Date:	02-Mar-2006	Relative Humidity:	%
EUT Model #:	Tiamis-800	EUT Power:	6 VDC	Air Pressure:	kPa
EUT Serial #:	Sample2			Page:	
Manufacturer:	LexyCom Technologies, Inc.				
EUT Description:	902...928 MHz Software Defined Radio transceiver				
Notes:	Rev A2				

Level Key	
Pk – Peak	Nb – Narrow Band
Qp – QuasiPeak	Bb – Broad Band
Av - Average	

FREQ (MHz)	LEVEL (dBuV)	CABLE / ANT / PREAMP (dB) (dB\m) (dB)	FINAL (dBuV)	POL / HGT / AZ (m) (DEG)	DELTA1 (dB) 15.209 <1GHz	DELTA2 (dB) 15.209 >1GHz
30.00	19.8 Qp	0.5 / 13.1 / 28.2	5.2	V / 1.0 / 270.0	-34.8	N/A
36.11	19.6 Qp	0.6 / 12.3 / 28.2	4.2	V / 1.0 / 270.0	-35.8	N/A
42.71	19.6 Qp	0.7 / 11.3 / 28.2	3.3	V / 1.0 / 270.0	-36.7	N/A
75.14	20.2 Qp	0.9 / 7.8 / 28.1	0.8	V / 1.0 / 270.0	-39.2	N/A
80.00	20.5 Qp	0.9 / 7.0 / 28.1	0.3	V / 1.0 / 270.0	-39.7	N/A
134.59	20.2 Qp	1.3 / 12.5 / 27.8	6.2	V / 1.0 / 270.0	-37.3	N/A
138.51	19.8 Qp	1.3 / 12.6 / 27.8	5.8	V / 1.0 / 270.0	-37.7	N/A
141.89	19.6 Qp	1.3 / 12.5 / 27.8	5.7	V / 1.0 / 270.0	-37.8	N/A
195.00	19.9 Qp	1.5 / 13.8 / 27.5	7.6	V / 1.0 / 270.0	-35.9	N/A
No higher emissions found at 0, 90, 180, degrees, Vertical.						
No significant emissions detected within 30 dB of the limit.						
Horizontal						
No significant emissions detected between 30 - 200 MHz, Horizontal.						
0, 90, 180, 270 degrees						
The following are noise floor points.						
30.00	19.3 Qp	0.5 / 13.1 / 28.2	4.7	H / 2.0 / 0.0	-35.3	N/A
36.11	19.0 Qp	0.6 / 12.3 / 28.2	3.6	H / 2.0 / 0.0	-36.4	N/A
42.71	19.0 Qp	0.7 / 11.3 / 28.2	2.8	H / 2.0 / 0.0	-37.2	N/A
75.14	19.9 Qp	0.9 / 7.8 / 28.1	0.6	H / 2.0 / 0.0	-39.4	N/A
80.00	19.4 Qp	0.9 / 7.0 / 28.1	-0.8	H / 2.0 / 0.0	-40.8	N/A
134.59	19.4 Qp	1.3 / 12.5 / 27.8	5.3	H / 2.0 / 0.0	-38.2	N/A
138.51	19.2 Qp	1.3 / 12.6 / 27.8	5.3	H / 2.0 / 0.0	-38.2	N/A
141.89	19.1 Qp	1.3 / 12.5 / 27.8	5.1	H / 2.0 / 0.0	-38.4	N/A
195.00	19.4 Qp	1.5 / 13.8 / 27.5	7.1	H / 2.0 / 0.0	-36.4	N/A
Antenna: 8888 EMCO Log						
Vertical, 0 degrees						
208.05	39.5 Qp	1.5 / 11.4 / 27.4	25.0	V / 1.0 / 0.0	-18.5	N/A
234.06	36.8 Qp	1.7 / 11.4 / 27.2	22.6	V / 1.0 / 0.0	-23.4	N/A
242.30	29.1 Qp	1.7 / 11.9 / 27.1	15.5	V / 1.0 / 0.0	-30.5	N/A
260.06	35.4 Qp	1.8 / 12.8 / 27.1	22.9	V / 1.0 / 0.0	-23.1	N/A

Intertek ETL Semko
5541 Central Avenue, Suite 110
Boulder, Colorado 80301
Voice: 303 786 7999 Fax: 303 449 6160

FREQ	LEVEL	CABLE / ANT / PREAMP	FINAL	POL / HGT / AZ	DELTA1 (dB)	DELTA2 (dB)
(MHz)	(dBuV)	(dB) (dB\m) (dB)	(dBuV)	(m) (DEG)	15.209 <1GHz	15.209 >1GHz
279.62	21.1 Qp	1.8 / 13.6 / 27.0	9.5	V / 1.0 / 0.0	-36.5	N/A
312.05	34.9 Qp	1.9 / 15.3 / 27.1	24.9	V / 1.0 / 0.0	-21.1	N/A
338.06	28.2 Qp	2.0 / 14.9 / 27.3	17.9	V / 1.0 / 0.0	-28.1	N/A
372.31	23.6 Qp	2.1 / 15.6 / 27.5	13.8	V / 1.0 / 0.0	-32.2	N/A
390.05	39.2 Qp	2.2 / 15.9 / 27.7	29.5	V / 1.0 / 0.0	-16.5	N/A
416.06	30.4 Qp	2.3 / 16.4 / 27.9	21.1	V / 1.0 / 0.0	-24.9	N/A
419.44	29.2 Qp	2.3 / 16.5 / 27.9	20.0	V / 1.0 / 0.0	-26.0	N/A
450.22	23.2 Qp	2.4 / 17.2 / 28.1	14.8	V / 1.0 / 0.0	-31.2	N/A
468.05	33.6 Qp	2.5 / 17.8 / 28.2	25.7	V / 1.0 / 0.0	-20.3	N/A
508.62	21.4 Qp	2.6 / 19.0 / 28.4	14.6	V / 1.0 / 0.0	-31.4	N/A
520.05	36.5 Qp	2.6 / 19.1 / 28.4	29.8	V / 1.0 / 0.0	-16.2	N/A
546.06	39.4 Qp	2.6 / 19.2 / 28.4	32.8	V / 1.0 / 0.0	-13.2	N/A
572.05	39.2 Qp	2.8 / 19.4 / 28.4	33.0	V / 1.0 / 0.0	-13.0	N/A
598.06	44.2 Qp	2.9 / 19.5 / 28.4	38.2	V / 1.0 / 0.0	-7.8	N/A
624.05	34.1 Qp	3.0 / 19.7 / 28.4	28.4	V / 1.0 / 0.0	-17.6	N/A
644.37	30.0 Qp	3.0 / 20.1 / 28.4	24.7	V / 1.0 / 0.0	-21.3	N/A
650.07	35.8 Qp	3.0 / 20.2 / 28.4	30.6	V / 1.0 / 0.0	-15.4	N/A
676.06	30.8 Qp	3.1 / 21.2 / 28.3	26.8	V / 1.0 / 0.0	-19.2	N/A
702.05	39.8 Qp	3.3 / 21.6 / 28.3	36.3	V / 1.0 / 0.0	-9.7	N/A
780.05	30.9 Qp	3.3 / 21.5 / 28.1	27.6	V / 1.0 / 0.0	-18.4	N/A
786.06	34.2 Qp	3.3 / 21.5 / 28.0	31.0	V / 1.0 / 0.0	-15.0	N/A
788.00	24.6 Qp	3.3 / 21.6 / 28.0	21.5	V / 1.0 / 0.0	-24.5	N/A
789.40	33.1 Qp	3.3 / 21.6 / 28.0	30.0	V / 1.0 / 0.0	-16.0	N/A
815.43	31.1 Qp	3.3 / 21.9 / 28.0	28.3	V / 1.0 / 0.0	-17.7	N/A
815.68	28.7 Qp	3.3 / 21.9 / 28.0	25.9	V / 1.0 / 0.0	-20.1	N/A
825.43	26.9 Qp	3.3 / 22.0 / 28.0	24.2	V / 1.0 / 0.0	-21.8	N/A
827.11	34.9 Qp	3.3 / 22.0 / 28.0	32.2	V / 1.0 / 0.0	-13.8	N/A
832.07	30.9 Qp	3.4 / 22.2 / 28.0	28.4	V / 1.0 / 0.0	-17.6	N/A
836.37	27.3 Qp	3.4 / 22.1 / 27.9	24.9	V / 1.0 / 0.0	-21.1	N/A
841.43	38.7 Qp	3.4 / 22.4 / 27.9	36.6	V / 1.0 / 0.0	-9.4	N/A
841.68	36.0 Qp	3.4 / 22.3 / 27.9	33.9	V / 1.0 / 0.0	-12.1	N/A
988.05	29.0 Qp	3.7 / 23.8 / 27.3	29.2	V / 1.0 / 0.0	-24.8	N/A
997.55	20.2 Qp	3.7 / 23.9 / 27.3	20.6	V / 1.0 / 0.0	-33.4	N/A
997.69	20.5 Qp	3.7 / 23.9 / 27.3	20.8	V / 1.0 / 0.0	-33.2	N/A
840.38	31.6 Qp	3.4 / 22.3 / 27.9	29.4	V / 1.0 / 0.0	-16.6	N/A
833.08	37.1 Qp	3.4 / 22.2 / 28.0	34.7	V / 1.0 / 0.0	-11.3	N/A
830.23	45.5 Qp	3.3 / 22.1 / 28.0	43.0	V / 1.0 / 0.0	-3.0	N/A
754.04	32.8 Qp	3.2 / 21.3 / 28.2	29.1	V / 1.0 / 0.0	-16.9	N/A
685.69	32.9 Qp	3.2 / 21.4 / 28.3	29.2	V / 1.0 / 0.0	-16.8	N/A
685.41	31.9 Qp	3.2 / 21.4 / 28.3	28.2	V / 1.0 / 0.0	-17.8	N/A
780.05	31.6 Qp	3.3 / 21.5 / 28.1	28.2	V / 1.0 / 90.0	-17.8	N/A
754.04	36.6 Qp	3.2 / 21.3 / 28.2	32.9	V / 1.0 / 90.0	-13.1	N/A
702.06	42.6 Qp	3.3 / 21.6 / 28.3	39.2	V / 1.0 / 90.0	-6.8	N/A
676.06	38.4 Qp	3.1 / 21.2 / 28.3	34.4	V / 1.0 / 90.0	-11.6	N/A
650.07	44.6 Qp	3.0 / 20.2 / 28.4	39.5	V / 1.0 / 90.0	-6.5	N/A
624.05	40.4 Qp	3.0 / 19.7 / 28.4	34.6	V / 1.0 / 90.0	-11.4	N/A

Intertek ETL Semko
5541 Central Avenue, Suite 110
Boulder, Colorado 80301
Voice: 303 786 7999 Fax: 303 449 6160

FREQ	LEVEL	CABLE / ANT / PREAMP	FINAL	POL / HGT / AZ	DELTA1 (dB)	DELTA2 (dB)
(MHz)	(dBuV)	(dB) (dB\m) (dB)	(dBuV)	(m) (DEG)	15.209 <1GHz	15.209 >1GHz
546.06	46.5 Qp	2.6 / 19.2 / 28.4	40.0	V / 1.0 / 90.0	-6.0	N/A
520.05	35.2 Qp	2.6 / 19.1 / 28.4	28.5	V / 1.0 / 90.0	-17.5	N/A
508.62	23.5 Qp	2.6 / 19.0 / 28.4	16.8	V / 1.0 / 90.0	-29.2	N/A
419.44	28.9 Qp	2.3 / 16.5 / 27.9	19.8	V / 1.0 / 90.0	-26.2	N/A
416.06	36.9 Qp	2.3 / 16.4 / 27.9	27.6	V / 1.0 / 90.0	-18.4	N/A
338.06	35.9 Qp	2.0 / 14.9 / 27.3	25.5	V / 1.0 / 90.0	-20.5	N/A
260.06	37.6 Qp	1.8 / 12.8 / 27.1	25.1	V / 1.0 / 90.0	-20.9	N/A
242.42	30.2 Qp	1.7 / 11.9 / 27.1	16.6	V / 1.0 / 90.0	-29.4	N/A
208.05	43.1 Qp	1.5 / 11.4 / 27.4	28.6	V / 1.0 / 90.0	-14.9	N/A
208.05	44.2 Qp	1.5 / 11.4 / 27.4	29.7	V / 1.0 / 180.0	-13.8	N/A
390.05	41.1 Qp	2.2 / 15.9 / 27.7	31.4	V / 1.0 / 180.0	-14.6	N/A
416.06	38.9 Qp	2.3 / 16.4 / 27.9	29.6	V / 1.0 / 180.0	-16.4	N/A
419.44	29.6 Qp	2.3 / 16.5 / 27.9	20.4	V / 1.0 / 180.0	-25.6	N/A
468.05	35.0 Qp	2.5 / 17.8 / 28.2	27.1	V / 1.0 / 180.0	-18.9	N/A
520.05	40.1 Qp	2.6 / 19.1 / 28.4	33.4	V / 1.0 / 180.0	-12.6	N/A
644.37	31.1 Qp	3.0 / 20.1 / 28.4	25.8	V / 1.0 / 180.0	-20.2	N/A
780.05	37.2 Qp	3.3 / 21.5 / 28.1	33.9	V / 1.0 / 180.0	-12.1	N/A
780.05	38.3 Qp	3.3 / 21.5 / 28.1	35.0	V / 1.0 / 270.0	-11.0	N/A
754.04	37.8 Qp	3.2 / 21.3 / 28.2	34.1	V / 1.0 / 270.0	-11.9	N/A
624.05	45.0 Qp	3.0 / 19.7 / 28.4	39.2	V / 1.0 / 270.0	-6.8	N/A
598.06	50.2 Qp	2.9 / 19.5 / 28.4	44.2	V / 1.0 / 270.0	-1.8	N/A
572.05	44.3 Qp	2.8 / 19.4 / 28.4	38.0	V / 1.0 / 270.0	-8.0	N/A
546.06	43.9 Qp	2.6 / 19.2 / 28.4	37.3	V / 1.0 / 270.0	-8.7	N/A
520.05	42.4 Qp	2.6 / 19.1 / 28.4	35.6	V / 1.0 / 270.0	-10.4	N/A
468.05	36.0 Qp	2.5 / 17.8 / 28.2	28.1	V / 1.0 / 270.0	-17.9	N/A
312.05	37.1 Qp	1.9 / 15.3 / 27.1	27.2	V / 1.0 / 270.0	-18.8	N/A
The following were maximized between 200 - 1000 MHz, Vertical.						
208.05	46.5 Qp	1.5 / 11.4 / 27.4	32.0	V / 1.0 / 140.0	-11.5	N/A
546.06	49.0 Qp	2.6 / 19.2 / 28.4	42.4	V / 1.0 / 98.0	-3.6	N/A
598.06	50.4 Qp	2.9 / 19.5 / 28.4	44.4	V / 1.0 / 272.0	-1.6	N/A
624.05	45.5 Qp	3.0 / 19.7 / 28.4	39.7	V / 1.0 / 266.0	-6.3	N/A
650.07	47.6 Qp	3.0 / 20.2 / 28.4	42.5	V / 1.0 / 133.0	-3.5	N/A
702.06	47.0 Qp	3.3 / 21.6 / 28.3	43.6	V / 1.0 / 144.0	-2.4	N/A
830.23	47.9 Qp	3.3 / 22.1 / 28.0	45.4	V / 1.3 / 15.0	-0.6	N/A
841.43	41.8 Qp	3.4 / 22.4 / 27.9	39.7	V / 1.3 / 354.0	-6.3	N/A
Horizontal, 0 degrees						
208.05	47.5 Qp	1.5 / 11.4 / 27.4	33.0	H / 1.6 / 0.0	-10.5	N/A
234.06	41.8 Qp	1.7 / 11.4 / 27.2	27.6	H / 1.6 / 0.0	-18.4	N/A
242.42	34.8 Qp	1.7 / 11.9 / 27.1	21.2	H / 1.6 / 0.0	-24.8	N/A
260.06	46.0 Qp	1.8 / 12.8 / 27.1	33.5	H / 1.6 / 0.0	-12.5	N/A
279.62	21.9 Qp	1.8 / 13.6 / 27.0	10.2	H / 1.6 / 0.0	-35.8	N/A
312.05	39.1 Qp	1.9 / 15.3 / 27.1	29.2	H / 1.6 / 0.0	-16.8	N/A
338.06	35.6 Qp	2.0 / 14.9 / 27.3	25.3	H / 1.6 / 0.0	-20.7	N/A
390.05	37.6 Qp	2.2 / 15.9 / 27.7	27.9	H / 1.6 / 0.0	-18.1	N/A
416.06	41.3 Qp	2.3 / 16.4 / 27.9	32.0	H / 1.6 / 0.0	-14.0	N/A

Intertek ETL Semko
5541 Central Avenue, Suite 110
Boulder, Colorado 80301
Voice: 303 786 7999 Fax: 303 449 6160

FREQ	LEVEL	CABLE / ANT / PREAMP	FINAL	POL / HGT / AZ	DELTA1 (dB)	DELTA2 (dB)
(MHz)	(dBuV)	(dB) (dB\m) (dB)	(dBuV)	(m) (DEG)	15.209 <1GHz	15.209 >1GHz
468.05	45.2 Qp	2.5 / 17.8 / 28.2	37.3	H / 1.6 / 0.0	-8.7	N/A
520.05	43.5 Qp	2.6 / 19.1 / 28.4	36.7	H / 1.6 / 0.0	-9.3	N/A
546.06	47.1 Qp	2.6 / 19.2 / 28.4	40.6	H / 1.6 / 0.0	-5.4	N/A
572.05	40.5 Qp	2.8 / 19.4 / 28.4	34.2	H / 1.6 / 0.0	-11.8	N/A
598.06	47.2 Qp	2.9 / 19.5 / 28.4	41.2	H / 1.6 / 0.0	-4.8	N/A
624.05	38.0 Qp	3.0 / 19.7 / 28.4	32.3	H / 1.6 / 0.0	-13.7	N/A
644.37	22.4 Qp	3.0 / 20.1 / 28.4	17.0	H / 1.6 / 0.0	-29.0	N/A
650.07	38.6 Qp	3.0 / 20.2 / 28.4	33.5	H / 1.6 / 0.0	-12.5	N/A
676.06	30.6 Qp	3.1 / 21.2 / 28.3	26.6	H / 1.6 / 0.0	-19.4	N/A
702.06	35.5 Qp	3.3 / 21.6 / 28.3	32.0	H / 1.6 / 0.0	-14.0	N/A
754.04	35.8 Qp	3.2 / 21.3 / 28.2	32.1	H / 1.6 / 0.0	-13.9	N/A
780.05	40.4 Qp	3.3 / 21.5 / 28.1	37.1	H / 1.6 / 0.0	-8.9	N/A
830.23	30.1 Qp	3.3 / 22.1 / 28.0	27.6	H / 1.6 / 0.0	-18.4	N/A
780.05	33.2 Qp	3.3 / 21.5 / 28.1	29.9	H / 2.5 / 0.0	-16.1	N/A
702.06	40.5 Qp	3.3 / 21.6 / 28.3	37.0	H / 2.5 / 0.0	-9.0	N/A
676.06	35.5 Qp	3.1 / 21.2 / 28.3	31.6	H / 2.5 / 0.0	-14.4	N/A
624.05	37.1 Qp	3.0 / 19.7 / 28.4	31.4	H / 2.5 / 0.0	-14.6	N/A
598.06	46.1 Qp	2.9 / 19.5 / 28.4	40.1	H / 2.5 / 0.0	-5.9	N/A
546.06	39.8 Qp	2.6 / 19.2 / 28.4	33.2	H / 2.5 / 0.0	-12.8	N/A
416.06	41.5 Qp	2.3 / 16.4 / 27.9	32.2	H / 2.5 / 0.0	-13.8	N/A
390.05	40.7 Qp	2.2 / 15.9 / 27.7	31.0	H / 2.5 / 0.0	-15.0	N/A
260.06	40.2 Qp	1.8 / 12.8 / 27.1	27.7	H / 2.5 / 0.0	-18.3	N/A
208.05	45.0 Qp	1.5 / 11.4 / 27.4	30.5	H / 2.5 / 0.0	-13.0	N/A
390.05	37.8 Qp	2.2 / 15.9 / 27.7	28.0	H / 2.5 / 90.0	-18.0	N/A
598.06	45.9 Qp	2.9 / 19.5 / 28.4	39.9	H / 2.5 / 90.0	-6.1	N/A
754.04	37.5 Qp	3.2 / 21.3 / 28.2	33.8	H / 2.5 / 90.0	-12.2	N/A
598.06	45.4 Qp	2.9 / 19.5 / 28.4	39.4	H / 1.6 / 90.0	-6.6	N/A
260.06	43.3 Qp	1.8 / 12.8 / 27.1	30.8	H / 1.6 / 90.0	-15.2	N/A
208.05	49.2 Qp	1.5 / 11.4 / 27.4	34.7	H / 1.6 / 90.0	-8.8	N/A
234.06	40.0 Qp	1.7 / 11.4 / 27.2	25.9	H / 1.6 / 180.0	-20.1	N/A
338.06	38.5 Qp	2.0 / 14.9 / 27.3	28.2	H / 1.6 / 180.0	-17.8	N/A
520.05	42.8 Qp	2.6 / 19.1 / 28.4	36.1	H / 1.6 / 180.0	-9.9	N/A
572.05	43.9 Qp	2.8 / 19.4 / 28.4	37.6	H / 1.6 / 180.0	-8.4	N/A
780.05	36.7 Qp	3.3 / 21.5 / 28.1	33.4	H / 1.6 / 180.0	-12.6	N/A
830.23	28.0 Qp	3.3 / 22.1 / 28.0	25.5	H / 1.6 / 180.0	-20.5	N/A
650.07	42.2 Qp	3.0 / 20.2 / 28.4	37.1	H / 2.5 / 180.0	-8.9	N/A
624.05	40.3 Qp	3.0 / 19.7 / 28.4	34.6	H / 2.5 / 180.0	-11.4	N/A
598.06	42.5 Qp	2.9 / 19.5 / 28.4	36.5	H / 2.5 / 180.0	-9.5	N/A
416.06	39.5 Qp	2.3 / 16.4 / 27.9	30.2	H / 2.5 / 180.0	-15.8	N/A
390.05	40.1 Qp	2.2 / 15.9 / 27.7	30.4	H / 2.5 / 270.0	-15.6	N/A
572.05	42.1 Qp	2.8 / 19.4 / 28.4	35.8	H / 1.6 / 270.0	-10.2	N/A

Intertek ETL Semko
5541 Central Avenue, Suite 110
Boulder, Colorado 80301
Voice: 303 786 7999 Fax: 303 449 6160

FREQ	LEVEL	CABLE / ANT / PREAMP	FINAL	POL / HGT / AZ	DELTA1 (dB)	DELTA2 (dB)
(MHz)	(dBuV)	(dB) (dB\m) (dB)	(dBuV)	(m) (DEG)	15.209 <1GHz	15.209 >1GHz
The following were maximized between 200 - 1000 MHz, Horizontal.						
208.05	50.4 Qp	1.5 / 11.4 / 27.4	35.9	H / 1.0 / 81.0	-7.6	N/A
468.05	45.4 Qp	2.5 / 17.8 / 28.2	37.4	H / 1.6 / 0.0	-8.6	N/A
546.06	51.1 Qp	2.6 / 19.2 / 28.4	44.6	H / 1.1 / 22.0	-1.4	N/A
572.05	47.1 Qp	2.8 / 19.4 / 28.4	40.9	H / 1.3 / 30.0	-5.1	N/A
598.06	51.6 Qp	2.9 / 19.5 / 28.4	45.6	H / 1.2 / 34.0	-0.4	N/A
702.06	49.1 Qp	3.3 / 21.6 / 28.3	45.6	H / 1.2 / 155.0	-0.4	N/A
Antenna: ID# 8886 Tensor Horn						
1 - 4 GHz, Vertical, 0 degrees						
1004.80	38.7 Av	2.2 / 23.6 / 37.6	26.9	V / 1.0 / 0.0	N/A	-27.1
1005.32	38.5 Av	2.2 / 23.6 / 37.6	26.6	V / 1.0 / 0.0	N/A	-27.4
1014.06	42.0 Av	2.2 / 23.6 / 37.6	30.2	V / 1.0 / 0.0	N/A	-23.8
1028.25	39.4 Av	2.2 / 23.6 / 37.6	27.6	V / 1.0 / 0.0	N/A	-26.4
1033.56	36.5 Av	2.2 / 23.7 / 37.6	24.8	V / 1.0 / 0.0	N/A	-29.2
1040.04	38.5 Av	2.3 / 23.7 / 37.6	26.7	V / 1.0 / 0.0	N/A	-27.3
1066.06	45.1 Av	2.3 / 23.7 / 37.7	33.5	V / 1.0 / 0.0	N/A	-20.5
1092.06	42.0 Av	2.3 / 23.8 / 37.7	30.5	V / 1.0 / 0.0	N/A	-23.5
1170.07	44.8 Av	2.4 / 24.0 / 37.8	33.4	V / 1.0 / 0.0	N/A	-20.6
1300.06	41.5 Av	2.6 / 24.3 / 37.7	30.7	V / 1.0 / 0.0	N/A	-23.3
1560.05	46.3 Av	2.9 / 25.0 / 37.3	36.9	V / 1.0 / 0.0	N/A	-17.1
2080.06	34.0 Av	3.3 / 26.8 / 38.1	26.0	V / 1.0 / 0.0	N/A	-28.0
2340.05	32.9 Av	3.7 / 27.6 / 38.5	25.7	V / 1.0 / 0.0	N/A	-28.3
2783.09	39.0 Av	4.3 / 29.0 / 38.3	34.2	V / 1.0 / 0.0	N/A	-19.8
2783.51	38.5 Av	4.3 / 29.0 / 38.3	33.7	V / 1.0 / 0.0	N/A	-20.3
2783.50	38.5 Av	4.3 / 29.0 / 38.3	33.6	V / 1.0 / 90.0	N/A	-20.4
1300.06	41.9 Av	2.6 / 24.3 / 37.7	31.0	V / 1.0 / 90.0	N/A	-23.0
1170.07	46.0 Av	2.4 / 24.0 / 37.8	34.6	V / 1.0 / 90.0	N/A	-19.4
1005.32	40.8 Av	2.2 / 23.6 / 37.6	29.0	V / 1.0 / 90.0	N/A	-25.0
1004.80	41.1 Av	2.2 / 23.6 / 37.6	29.3	V / 1.0 / 90.0	N/A	-24.7
1072.56	35.8 Av	2.3 / 23.7 / 37.7	24.2	V / 1.0 / 90.0	N/A	-29.8
1118.06	37.3 Av	2.4 / 23.9 / 37.7	25.8	V / 1.0 / 90.0	N/A	-28.2
1222.07	42.4 Av	2.5 / 24.1 / 37.8	31.2	V / 1.0 / 90.0	N/A	-22.8
1248.05	38.3 Av	2.5 / 24.2 / 37.8	27.2	V / 1.0 / 90.0	N/A	-26.8
1274.05	37.4 Av	2.6 / 24.2 / 37.7	26.4	V / 1.0 / 90.0	N/A	-27.6
1069.69	36.5 Av	2.3 / 23.7 / 37.7	24.9	V / 1.0 / 180.0	N/A	-29.1
1300.06	43.0 Av	2.6 / 24.3 / 37.7	32.1	V / 1.0 / 270.0	N/A	-21.9
1118.06	38.1 Av	2.4 / 23.9 / 37.7	26.6	V / 1.0 / 270.0	N/A	-27.4
1014.06	44.9 Av	2.2 / 23.6 / 37.6	33.1	V / 1.0 / 270.0	N/A	-20.9
The following were maximized between 1 - 4 GHz, Vertical.						
1170.07	48.4 Av	2.4 / 24.0 / 37.8	37.0	V / 1.0 / 67.0	N/A	-17.0
1560.05	49.3 Av	2.9 / 25.0 / 37.3	39.9	V / 1.0 / 353.0	N/A	-14.1
Horizontal, 0 degrees						
1014.06	42.0 Av	2.2 / 23.6 / 37.6	30.3	H / 1.0 / 0.0	N/A	-23.7
1040.04	43.1 Av	2.3 / 23.7 / 37.6	31.4	H / 1.0 / 0.0	N/A	-22.6

Intertek ETL Semko
5541 Central Avenue, Suite 110
Boulder, Colorado 80301
Voice: 303 786 7999 Fax: 303 449 6160

FREQ	LEVEL	CABLE / ANT / PREAMP	FINAL	POL / HGT / AZ	DELTA1 (dB)	DELTA2 (dB)
(MHz)	(dBuV)	(dB) (dB\m) (dB)	(dBuV)	(m) (DEG)	15.209 <1GHz	15.209 >1GHz
1066.06	36.2 Av	2.3 / 23.7 / 37.7	24.6	H / 1.0 / 0.0	N/A	-29.4
1092.06	37.6 Av	2.3 / 23.8 / 37.7	26.1	H / 1.0 / 0.0	N/A	-27.9
1170.07	43.0 Av	2.4 / 24.0 / 37.8	31.6	H / 1.0 / 0.0	N/A	-22.4
1248.05	35.1 Av	2.5 / 24.2 / 37.8	24.0	H / 1.0 / 0.0	N/A	-30.0
1274.05	35.4 Av	2.6 / 24.2 / 37.7	24.5	H / 1.0 / 0.0	N/A	-29.5
1560.05	39.0 Av	2.9 / 25.0 / 37.3	29.6	H / 1.0 / 0.0	N/A	-24.4
1560.05	39.9 Av	2.9 / 25.0 / 37.3	30.4	H / 1.0 / 90.0	N/A	-23.6
1170.07	42.0 Av	2.4 / 24.0 / 37.8	30.6	H / 1.0 / 90.0	N/A	-23.4
1118.06	36.8 Av	2.4 / 23.9 / 37.7	25.2	H / 1.0 / 90.0	N/A	-28.8
1066.06	35.2 Av	2.3 / 23.7 / 37.7	23.6	H / 1.0 / 90.0	N/A	-30.4
1040.04	39.8 Av	2.3 / 23.7 / 37.6	28.0	H / 1.0 / 90.0	N/A	-26.0
1014.06	42.7 Av	2.2 / 23.6 / 37.6	30.9	H / 1.0 / 90.0	N/A	-23.1
1118.06	37.3 Av	2.4 / 23.9 / 37.7	25.8	H / 1.0 / 180.0	N/A	-28.2
1560.05	38.9 Av	2.9 / 25.0 / 37.3	29.4	H / 1.0 / 180.0	N/A	-24.6
2340.05	35.0 Av	3.7 / 27.6 / 38.5	27.8	H / 1.0 / 180.0	N/A	-26.2
2783.09	39.1 Av	4.3 / 29.0 / 38.3	34.3	H / 1.0 / 180.0	N/A	-19.7
2080.06	35.0 Av	3.3 / 26.8 / 38.1	27.1	H / 1.0 / 270.0	N/A	-26.9
1274.05	37.8 Av	2.6 / 24.2 / 37.7	26.8	H / 1.0 / 270.0	N/A	-27.2
1170.07	43.8 Av	2.4 / 24.0 / 37.8	32.4	H / 1.0 / 270.0	N/A	-21.6
1040.04	38.6 Av	2.3 / 23.7 / 37.6	26.9	H / 1.0 / 270.0	N/A	-27.1
The following were maximized between 1 - 4 GHz, Horizontal.						
1040.04	45.0 Av	2.3 / 23.7 / 37.6	33.3	H / 1.0 / 30.0	N/A	-20.7
1560.05	42.4 Av	2.9 / 25.0 / 37.3	32.9	H / 1.0 / 306.0	N/A	-21.1
2783.09	43.9 Av	4.3 / 29.0 / 38.3	39.0	H / 1.0 / 142.0	N/A	-15.0
4 - 8 GHz, Horizontal, 0 degrees						
No significant emissions detected between 4 - 8 GHz, Horizontal.						
0, 90, 180, 270 degrees						
The following are noise floor points.						
4500.00	36.4 Av	6.6 / 32.1 / 40.5	34.6	H / 1.0 / 0.0	N/A	-19.4
6500.00	32.9 Av	8.5 / 34.4 / 40.3	35.5	H / 1.0 / 0.0	N/A	-18.5
The following were maximized between 4 - 8 GHz, Vertical.						
4160.05	35.1 Av	6.0 / 32.0 / 40.2	32.8	V / 1.0 / 40.0	N/A	-21.2
No other significant emissions detected, the following are noise floor points.						
5000.00	33.2 Av	7.6 / 32.5 / 40.4	32.9	V / 1.0 / 40.0	N/A	-21.1
7000.00	32.1 Av	8.1 / 35.0 / 40.5	34.7	V / 1.0 / 40.0	N/A	-19.3
8 - 10 GHz, Vertical.						
No significant emissions detected, the following are noise floor points.						
8500.00	43.4 Av	8.5 / 36.3 / 48.0	40.2	V / 1.0 / 0.0	N/A	-13.8
No significant emissions detected, Horizontal.						
The following is noise floor.						
9500.00	43.5 Av	9.4 / 38.3 / 48.8	42.4	H / 1.0 / 0.0	N/A	-11.6
End of Run						

Intertek ETL Semko
5541 Central Avenue, Suite 110
Boulder, Colorado 80301
Voice: 303 786 7999 Fax: 303 449 6160

FREQ	LEVEL	CABLE / ANT / PREAMP	FINAL	POL / HGT / AZ	DELTA1 (dB)	DELTA2 (dB)
(MHz)	(dBuV)	(dB) (dB\m) (dB)	(dBuV)	(m) (DEG)	15.209 <1GHz	15.209 >1GHz
********** Measurement Summary **********						
598.06	51.6 Qp	2.9 / 19.5 / 28.4	45.6	H / 1.2 / 34.0	-0.4	N/A
702.06	49.1 Qp	3.3 / 21.6 / 28.3	45.6	H / 1.2 / 155.0	-0.4	N/A
830.23	47.9 Qp	3.3 / 22.1 / 28.0	45.4	V / 1.3 / 15.0	-0.6	N/A
546.06	51.1 Qp	2.6 / 19.2 / 28.4	44.6	H / 1.1 / 22.0	-1.4	N/A
650.07	47.6 Qp	3.0 / 20.2 / 28.4	42.5	V / 1.0 / 133.0	-3.5	N/A
572.05	47.1 Qp	2.8 / 19.4 / 28.4	40.9	H / 1.3 / 30.0	-5.1	N/A
624.05	45.5 Qp	3.0 / 19.7 / 28.4	39.7	V / 1.0 / 266.0	-6.3	N/A
841.43	41.8 Qp	3.4 / 22.4 / 27.9	39.7	V / 1.3 / 354.0	-6.3	N/A
208.05	50.4 Qp	1.5 / 11.4 / 27.4	35.9	H / 1.0 / 81.0	-7.6	N/A
468.05	45.4 Qp	2.5 / 17.8 / 28.2	37.4	H / 1.6 / 0.0	-8.6	N/A
780.05	40.4 Qp	3.3 / 21.5 / 28.1	37.1	H / 1.6 / 0.0	-8.9	N/A
520.05	43.5 Qp	2.6 / 19.1 / 28.4	36.7	H / 1.6 / 0.0	-9.3	N/A
833.08	37.1 Qp	3.4 / 22.2 / 28.0	34.7	V / 1.0 / 0.0	-11.3	N/A
676.06	38.4 Qp	3.1 / 21.2 / 28.3	34.4	V / 1.0 / 90.0	-11.6	N/A
9500.00	43.5 Av	9.4 / 38.3 / 48.8	42.4	H / 1.0 / 0.0	N/A	-11.6
754.04	37.8 Qp	3.2 / 21.3 / 28.2	34.1	V / 1.0 / 270.0	-11.9	N/A
841.68	36.0 Qp	3.4 / 22.3 / 27.9	33.9	V / 1.0 / 0.0	-12.1	N/A
260.06	46.0 Qp	1.8 / 12.8 / 27.1	33.5	H / 1.6 / 0.0	-12.5	N/A
416.06	41.5 Qp	2.3 / 16.4 / 27.9	32.2	H / 2.5 / 0.0	-13.8	N/A
827.11	34.9 Qp	3.3 / 22.0 / 28.0	32.2	V / 1.0 / 0.0	-13.8	N/A
8500.00	43.4 Av	8.5 / 36.3 / 48.0	40.2	V / 1.0 / 0.0	N/A	-13.8
1560.05	49.3 Av	2.9 / 25.0 / 37.3	39.9	V / 1.0 / 353.0	N/A	-14.1
390.05	41.1 Qp	2.2 / 15.9 / 27.7	31.4	V / 1.0 / 180.0	-14.6	N/A
786.06	34.2 Qp	3.3 / 21.5 / 28.0	31.0	V / 1.0 / 0.0	-15.0	N/A
2783.09	43.9 Av	4.3 / 29.0 / 38.3	39.0	H / 1.0 / 142.0	N/A	-15.0
789.40	33.1 Qp	3.3 / 21.6 / 28.0	30.0	V / 1.0 / 0.0	-16.0	N/A
840.38	31.6 Qp	3.4 / 22.3 / 27.9	29.4	V / 1.0 / 0.0	-16.6	N/A
312.05	39.1 Qp	1.9 / 15.3 / 27.1	29.2	H / 1.6 / 0.0	-16.8	N/A
685.69	32.9 Qp	3.2 / 21.4 / 28.3	29.2	V / 1.0 / 0.0	-16.8	N/A
1170.07	48.4 Av	2.4 / 24.0 / 37.8	37.0	V / 1.0 / 67.0	N/A	-17.0
832.07	30.9 Qp	3.4 / 22.2 / 28.0	28.4	V / 1.0 / 0.0	-17.6	N/A
815.43	31.1 Qp	3.3 / 21.9 / 28.0	28.3	V / 1.0 / 0.0	-17.7	N/A
338.06	38.5 Qp	2.0 / 14.9 / 27.3	28.2	H / 1.6 / 180.0	-17.8	N/A
685.41	31.9 Qp	3.2 / 21.4 / 28.3	28.2	V / 1.0 / 0.0	-17.8	N/A
234.06	41.8 Qp	1.7 / 11.4 / 27.2	27.6	H / 1.6 / 0.0	-18.4	N/A
6500.00	32.9 Av	8.5 / 34.4 / 40.3	35.5	H / 1.0 / 0.0	N/A	-18.5
7000.00	32.1 Av	8.1 / 35.0 / 40.5	34.7	V / 1.0 / 40.0	N/A	-19.3
4500.00	36.4 Av	6.6 / 32.1 / 40.5	34.6	H / 1.0 / 0.0	N/A	-19.4
815.68	28.7 Qp	3.3 / 21.9 / 28.0	25.9	V / 1.0 / 0.0	-20.1	N/A
644.37	31.1 Qp	3.0 / 20.1 / 28.4	25.8	V / 1.0 / 180.0	-20.2	N/A
1066.06	45.1 Av	2.3 / 23.7 / 37.7	33.5	V / 1.0 / 0.0	N/A	-20.5
1040.04	45.0 Av	2.3 / 23.7 / 37.6	33.3	H / 1.0 / 30.0	N/A	-20.7
1014.06	44.9 Av	2.2 / 23.6 / 37.6	33.1	V / 1.0 / 270.0	N/A	-20.9
836.37	27.3 Qp	3.4 / 22.1 / 27.9	24.9	V / 1.0 / 0.0	-21.1	N/A

Intertek ETL Semko
5541 Central Avenue, Suite 110
Boulder, Colorado 80301
Voice: 303 786 7999 Fax: 303 449 6160

FREQ	LEVEL	CABLE / ANT / PREAMP	FINAL	POL / HGT / AZ	DELTA1 (dB)	DELTA2 (dB)
(MHz)	(dBuV)	(dB) (dB\m) (dB)	(dBuV)	(m) (DEG)	15.209 <1GHz	15.209 >1GHz
5000.00	33.2 Av	7.6 / 32.5 / 40.4	32.9	V / 1.0 / 40.0	N/A	-21.1
4160.05	35.1 Av	6.0 / 32.0 / 40.2	32.8	V / 1.0 / 40.0	N/A	-21.2
825.43	26.9 Qp	3.3 / 22.0 / 28.0	24.2	V / 1.0 / 0.0	-21.8	N/A
1300.06	43.0 Av	2.6 / 24.3 / 37.7	32.1	V / 1.0 / 270.0	N/A	-21.9
1222.07	42.4 Av	2.5 / 24.1 / 37.8	31.2	V / 1.0 / 90.0	N/A	-22.8
1092.06	42.0 Av	2.3 / 23.8 / 37.7	30.5	V / 1.0 / 0.0	N/A	-23.5
788.00	24.6 Qp	3.3 / 21.6 / 28.0	21.5	V / 1.0 / 0.0	-24.5	N/A
1004.80	41.1 Av	2.2 / 23.6 / 37.6	29.3	V / 1.0 / 90.0	N/A	-24.7
242.42	34.8 Qp	1.7 / 11.9 / 27.1	21.2	H / 1.6 / 0.0	-24.8	N/A
988.05	29.0 Qp	3.7 / 23.8 / 27.3	29.2	V / 1.0 / 0.0	-24.8	N/A
1005.32	40.8 Av	2.2 / 23.6 / 37.6	29.0	V / 1.0 / 90.0	N/A	-25.0
419.44	29.6 Qp	2.3 / 16.5 / 27.9	20.4	V / 1.0 / 180.0	-25.6	N/A
2340.05	35.0 Av	3.7 / 27.6 / 38.5	27.8	H / 1.0 / 180.0	N/A	-26.2
1028.25	39.4 Av	2.2 / 23.6 / 37.6	27.6	V / 1.0 / 0.0	N/A	-26.4
1248.05	38.3 Av	2.5 / 24.2 / 37.8	27.2	V / 1.0 / 90.0	N/A	-26.8
2080.06	35.0 Av	3.3 / 26.8 / 38.1	27.1	H / 1.0 / 270.0	N/A	-26.9
1274.05	37.8 Av	2.6 / 24.2 / 37.7	26.8	H / 1.0 / 270.0	N/A	-27.2
1118.06	38.1 Av	2.4 / 23.9 / 37.7	26.6	V / 1.0 / 270.0	N/A	-27.4
1069.69	36.5 Av	2.3 / 23.7 / 37.7	24.9	V / 1.0 / 180.0	N/A	-29.1
508.62	23.5 Qp	2.6 / 19.0 / 28.4	16.8	V / 1.0 / 90.0	-29.2	N/A
1033.56	36.5 Av	2.2 / 23.7 / 37.6	24.8	V / 1.0 / 0.0	N/A	-29.2
1072.56	35.8 Av	2.3 / 23.7 / 37.7	24.2	V / 1.0 / 90.0	N/A	-29.8
242.30	29.1 Qp	1.7 / 11.9 / 27.1	15.5	V / 1.0 / 0.0	-30.5	N/A
450.22	23.2 Qp	2.4 / 17.2 / 28.1	14.8	V / 1.0 / 0.0	-31.2	N/A
372.31	23.6 Qp	2.1 / 15.6 / 27.5	13.8	V / 1.0 / 0.0	-32.2	N/A
997.69	20.5 Qp	3.7 / 23.9 / 27.3	20.8	V / 1.0 / 0.0	-33.2	N/A
997.55	20.2 Qp	3.7 / 23.9 / 27.3	20.6	V / 1.0 / 0.0	-33.4	N/A
30.00	19.8 Qp	0.5 / 13.1 / 28.2	5.2	V / 1.0 / 270.0	-34.8	N/A
36.11	19.6 Qp	0.6 / 12.3 / 28.2	4.2	V / 1.0 / 270.0	-35.8	N/A
279.62	21.9 Qp	1.8 / 13.6 / 27.0	10.2	H / 1.6 / 0.0	-35.8	N/A
195.00	19.9 Qp	1.5 / 13.8 / 27.5	7.6	V / 1.0 / 270.0	-35.9	N/A
42.71	19.6 Qp	0.7 / 11.3 / 28.2	3.3	V / 1.0 / 270.0	-36.7	N/A
134.59	20.2 Qp	1.3 / 12.5 / 27.8	6.2	V / 1.0 / 270.0	-37.3	N/A
138.51	19.8 Qp	1.3 / 12.6 / 27.8	5.8	V / 1.0 / 270.0	-37.7	N/A
141.89	19.6 Qp	1.3 / 12.5 / 27.8	5.7	V / 1.0 / 270.0	-37.8	N/A
75.14	20.2 Qp	0.9 / 7.8 / 28.1	0.8	V / 1.0 / 270.0	-39.2	N/A
80.00	20.5 Qp	0.9 / 7.0 / 28.1	0.3	V / 1.0 / 270.0	-39.7	N/A

Intertek ETL Semko
5541 Central Avenue, Suite 110
Boulder, Colorado 80301
Voice: 303 786 7999 Fax: 303 449 6160

15.205 Test Data

Restricted Band Harmonics of the Fundamental

Sample1 with 5dB gain rod antenna.

Intertek ETL Semko
5541 Central Avenue, Suite 110
Boulder, Colorado 80301
Voice: 303 786 7999 Fax: 303 449 6160

Radiated Electromagnetic Emissions

Test Report #:	**BC500356 Run 1**	Test Area:	Pinewood Site 1 (3m)	Temperature:	20.5	°C
Test Method:	FCC Part 15.209	Test Date:	08-Nov-2005	Relative Humidity:	36	%
EUT Model #:	Tiamis-800	EUT Power:	6VDC	Air Pressure:	80	kPa
EUT Serial #:	Sample 1			Page:		
Manufacturer:	Lexycom					
EUT Description:	Software defined radio transceiver					
Notes:	902 to 928 MHz frequency hopping 1 watt radio.					

Level Key	
Pk – Peak	Nb – Narrow Band
Qp – QuasiPeak	Bb – Broad Band
Av - Average	

FREQ	LEVEL	CABLE / ANT / PREAMP	FINAL	POL / HGT / AZ	DELTA1 (dB)	DELTA2 (dB)
(MHz)	(dBuV)	(dB) (dB\m) (dB)	(dBuV)	(m) (DEG)	15.209 >1GHz	N/A
Low Channel						
Board is vertical on the table with the antenna connector on the left.						
2706.55	19.3 Av	4.2 / 26.9 / 0.0	50.4	V / 1.6 / 225.0	-3.6	N/A
2706.55	18.7 Av	4.2 / 26.9 / 0.0	49.8	H / 1.0 / 0.0	-4.2	N/A
Board is flat on the table.						
2706.94	19.6 Av	4.2 / 26.9 / 0.0	50.7	H / 1.0 / 0.0	-3.3	N/A
2706.94	19.8 Av	4.2 / 26.9 / 0.0	50.9	V / 1.1 / 221.0	-3.1	N/A
Board is vertical on the table with the antenna on top.						
2706.94	18.1 Av	4.2 / 26.9 / 0.0	49.2	V / 1.1 / 303.0	-4.8	N/A
2706.94	18.3 Av	4.2 / 26.9 / 0.0	49.4	H / 1.3 / 242.0	-4.6	N/A
Board placed in its worst case position.						
Low Channel						
3609.00	43.7 Av	5.0 / 28.9 / 39.0	38.6	H / 1.0 / 0.0	-15.4	N/A
3609.00	33.7 Av	5.0 / 28.9 / 39.0	28.6	V / 1.0 / 0.0	-25.4	N/A
4510.92	37.4 Av	6.6 / 30.2 / 40.5	33.7	V / 1.0 / 220.0	-20.3	N/A
4510.92	26.3 Av	6.6 / 30.2 / 40.5	22.6	H / 1.0 / 0.0	-31.4	N/A
5413.17	41.0 Av	6.9 / 31.9 / 40.2	39.5	H / 1.0 / 0.0	-14.5	N/A
5413.02	43.6 Av	6.9 / 31.9 / 40.2	42.1	V / 1.3 / 235.0	-11.9	N/A
8120.12	49.4 Av	8.3 / 34.4 / 46.8	45.4	V / 1.0 / 0.0	-8.6	N/A
9022.37	51.2 Av	8.5 / 35.2 / 48.5	46.4	V / 1.0 / 0.0	-7.6	N/A
8120.12	49.3 Av	8.3 / 34.4 / 46.8	45.2	H / 1.0 / 0.0	-8.8	N/A
9022.37	51.1 Av	8.5 / 35.2 / 48.5	46.3	H / 1.0 / 0.0	-7.7	N/A
Mid Channel						
2745.19	47.9 Av	4.3 / 27.0 / 38.2	41.0	H / 1.5 / 74.0	-13.0	N/A
2745.19	49.7 Av	4.3 / 27.0 / 38.2	42.8	V / 1.1 / 215.0	-11.2	N/A
3660.00	35.0 Av	5.1 / 29.0 / 38.8	30.3	V / 1.0 / 0.0	-23.7	N/A
3660.26	37.1 Av	5.1 / 29.0 / 38.8	32.3	H / 1.0 / 213.0	-21.7	N/A
4575.26	32.5 Av	6.8 / 30.3 / 40.5	29.1	H / 1.0 / 213.0	-24.9	N/A

Intertek ETL Semko
5541 Central Avenue, Suite 110
Boulder, Colorado 80301
Voice: 303 786 7999 Fax: 303 449 6160

FREQ	LEVEL	CABLE / ANT / PREAMP	FINAL	POL / HGT / AZ	DELTA1 (dB)	DELTA2 (dB)
(MHz)	(dBuV)	(dB) (dB\m) (dB)	(dBuV)	(m) (DEG)	15.209 >1GHz	N/A
4575.32	35.2 Av	6.8 / 30.3 / 40.5	31.8	V / 1.2 / 212.0	-22.2	N/A
No emissions seen above the noise floor for the following harmonics. The following are noise floor readings.						
7320.32	30.9 Av	8.2 / 33.8 / 40.4	32.5	V / 1.0 / 0.0	-21.5	N/A
8235.33	40.2 Av	8.4 / 34.5 / 47.1	35.9	H / 1.0 / 0.0	-18.1	N/A
9150.33	40.9 Av	8.8 / 35.3 / 48.1	36.9	H / 1.0 / 0.0	-17.1	N/A
High channel						
2783.45	52.2 Av	4.3 / 27.1 / 38.3	45.4	V / 1.0 / 17.0	-8.6	N/A
2783.45	51.0 Av	4.3 / 27.1 / 38.3	44.2	H / 1.3 / 266.0	-9.8	N/A
3711.26	35.0 Av	5.2 / 29.1 / 38.6	30.6	H / 1.0 / 254.0	-23.4	N/A
3711.26	34.5 Av	5.2 / 29.1 / 38.6	30.2	V / 1.0 / 225.0	-23.8	N/A
4639.10	34.6 Av	6.9 / 30.5 / 40.4	31.6	V / 1.2 / 300.0	-22.4	N/A
4639.10	31.8 Av	6.9 / 30.5 / 40.4	28.8	H / 1.0 / 0.0	-25.2	N/A
7422.35	30.8 Av	8.2 / 34.0 / 40.0	33.0	V / 1.0 / 0.0	-21.0	N/A
7422.35	30.8 Av	8.2 / 34.0 / 40.0	33.0	H / 1.0 / 0.0	-21.0	N/A
No emissions seen above the noise floor for the following harmonics. The following are noise floor readings.						
8350.10	39.6 Av	8.4 / 34.5 / 47.6	34.9	V / 1.0 / 0.0	-19.1	N/A

Intertek ETL Semko
5541 Central Avenue, Suite 110
Boulder, Colorado 80301
Voice: 303 786 7999 Fax: 303 449 6160

15.205 Test Data

Restricted Band Harmonics of the Fundamental

Sample2 with 10dB gain 6 element directional antenna.

Intertek ETL Semko
5541 Central Avenue, Suite 110
Boulder, Colorado 80301
Voice: 303 786 7999 Fax: 303 449 6160

Radiated Electromagnetic Emissions

Test Report #:	**3091658 Run 02**	Test Area:	Pinewood Site 1 (3m)	Temperature:	11.6	°C
Test Method:	FCC Part 15.209	Test Date:	10-Mar-2006	Relative Humidity:	30	%
EUT Model #:	Tiamis-800	EUT Power:	6 VDC	Air Pressure:	81	kPa
EUT Serial #:	Sample2			Page:		
Manufacturer:	LexyCom Technologies, Inc.					
EUT Description:	902...928 MHz Software Defined Radio transceiver					
Notes:	Rev A2					

Level Key	
Pk – Peak	Nb – Narrow Band
Qp – QuasiPeak	Bb – Broad Band
Av - Average	

FREQ	LEVEL	CABLE / ANT / PREAMP	FINAL	POL / HGT / AZ	DELTA1 (dB)	DELTA2 (dB)
(MHz)	(dBuV)	(dB) (dB\m) (dB)	(dBuV)	(m) (DEG)	15.209 >1GHz	N/A
EUT in axis 1						
EUT antenna in vertical polarization						
High Channel						
2783.08	48.0 Pk	4.3 / 29.0 / 38.3	43.1	V / 1.0 / 70.0	-10.9	N/A
2783.08	44.9 Pk	4.3 / 29.0 / 38.3	40.0	H / 1.0 / 145.0	-14.0	N/A
Mid Channel						
2744.84	50.1 Pk	4.3 / 28.9 / 38.2	45.1	H / 1.0 / 135.0	-8.9	N/A
2744.84	52.5 Pk	4.3 / 28.9 / 38.2	47.6	V / 1.0 / 68.0	-6.4	N/A
Low Channel						
2706.99	53.2 Pk	4.2 / 28.8 / 38.1	48.1	V / 1.0 / 70.0	-5.9	N/A
2706.99	52.1 Pk	4.2 / 28.8 / 38.1	47.0	H / 1.0 / 135.0	-7.0	N/A
Axis 2, EUT antenna horizontal						
Low Channel						
2706.99	51.1 Pk	4.2 / 28.8 / 38.1	46.1	H / 1.0 / 144.0	-7.9	N/A
2706.99	53.6 Pk	4.2 / 28.8 / 38.1	48.6	V / 1.0 / 67.0	-5.4	N/A
Mid Channel						
2744.84	52.2 Pk	4.3 / 28.9 / 38.2	47.2	V / 1.0 / 70.0	-6.8	N/A
2744.84	50.4 Pk	4.3 / 28.9 / 38.2	45.4	H / 1.0 / 138.0	-8.6	N/A
High Channel						
2783.08	46.5 Pk	4.3 / 29.0 / 38.3	41.6	H / 1.0 / 144.0	-12.4	N/A
2783.08	47.2 Pk	4.3 / 29.0 / 38.3	42.4	V / 1.0 / 67.0	-11.6	N/A

Intertek ETL Semko
5541 Central Avenue, Suite 110
Boulder, Colorado 80301
Voice: 303 786 7999 Fax: 303 449 6160

FREQ	LEVEL	CABLE / ANT / PREAMP	FINAL	POL / HGT / AZ	DELTA1 (dB)	DELTA2 (dB)
(MHz)	(dBuV)	(dB) (dB\m) (dB)	(dBuV)	(m) (DEG)	15.209 >1GHz	N/A
Axis 3, Antenna pointing upward.						
High Channel						
2783.08	48.4 Pk	4.3 / 29.0 / 38.3	43.5	V / 1.0 / 67.0	-10.5	N/A
2783.08	46.0 Pk	4.3 / 29.0 / 38.3	41.1	H / 1.0 / 145.0	-12.9	N/A
Mid Channel						
2744.84	50.4 Pk	4.3 / 28.9 / 38.2	45.4	H / 1.0 / 134.0	-8.6	N/A
2744.84	52.2 Pk	4.3 / 28.9 / 38.2	47.2	V / 1.0 / 66.0	-6.8	N/A
Low Channel						
2706.99	52.0 Pk	4.2 / 28.8 / 38.1	46.9	V / 1.0 / 65.0	-7.1	N/A
2706.99	51.0 Pk	4.2 / 28.8 / 38.1	46.0	H / 1.0 / 140.0	-8.0	N/A
EUT put in worst case position						
EUT antenna is horizontal.						
Low channel, Harmonics 4,5, and 6						
All of the following readings were maximized.						
3609.30	42.4 Pk	5.0 / 31.1 / 39.0	39.5	H / 1.0 / 183.0	-14.5	N/A
3609.30	43.7 Pk	5.0 / 31.1 / 39.0	40.8	V / 1.0 / 281.0	-13.2	N/A
4511.60	60.0 Pk	6.6 / 32.1 / 40.5	58.2	V / 1.0 / 281.0	4.2 *	N/A
4511.60	56.4 Pk	6.6 / 32.1 / 40.5	54.6	V / 1.0 / 281.0	0.6 *	N/A
4511.60	54.8 Pk	6.6 / 32.1 / 40.5	53.0	V / 1.0 / 281.0	-1.0	N/A
4511.60	55.6 Pk	6.6 / 32.1 / 40.5	53.9	V / 1.0 / 281.0	-0.1	N/A
4511.60	52.9 Pk	6.6 / 32.1 / 40.5	51.1	V / 1.0 / 281.0	-2.9	N/A
Added solder to RF shielding						
4511.60	54.4 Pk	6.6 / 32.1 / 40.5	52.6	V / 1.0 / 285.0	-1.4	N/A
4511.60	49.7 Pk	6.6 / 32.1 / 40.5	47.9	H / 1.0 / 134.0	-6.1	N/A
5413.93	44.0 Pk	6.9 / 32.8 / 40.2	43.4	H / 1.0 / 166.0	-10.6	N/A
5413.93	41.0 Pk	6.9 / 32.8 / 40.2	40.4	V / 1.0 / 210.0	-13.6	N/A
Harmonics 9 and 10						
8120.80	47.8 Pk	8.3 / 36.5 / 46.8	45.9	V / 1.0 / 316.0	-8.1	N/A
9023.10	52.6 Pk	8.5 / 37.3 / 48.5	49.9	V / 1.0 / 165.0	-4.1	N/A
9023.10	47.4 Pk	8.5 / 37.3 / 48.5	44.7	H / 1.0 / 217.0	-9.3	N/A
8120.78	44.5 Pk	8.3 / 36.5 / 46.8	42.5	H / 1.0 / 230.0	-11.5	N/A
Mid Channel						
Reverifying 3rd and 4th harmonics.						

Intertek ETL Semko
5541 Central Avenue, Suite 110
Boulder, Colorado 80301
Voice: 303 786 7999 Fax: 303 449 6160

FREQ	LEVEL	CABLE / ANT / PREAMP	FINAL	POL / HGT / AZ	DELTA1 (dB)	DELTA2 (dB)
(MHz)	(dBuV)	(dB) (dB\m) (dB)	(dBuV)	(m) (DEG)	15.209 >1GHz	N/A
2706.97	49.0 Pk	4.2 / 28.8 / 38.1	43.9	H / 1.0 / 131.0	-10.1	N/A
3609.28	39.2 Pk	5.0 / 31.1 / 39.0	36.4	H / 1.0 / 131.0	-17.6	N/A
3609.28	39.6 Pk	5.0 / 31.1 / 39.0	36.8	V / 1.0 / 70.0	-17.2	N/A
2706.97	51.8 Pk	4.2 / 28.8 / 38.1	46.7	V / 1.0 / 65.0	-7.3	N/A
Mid Channel						
Reverifying 3rd harmonic						
2744.83	51.4 Pk	4.3 / 28.9 / 38.2	46.4	V / 1.0 / 65.0	-7.6	N/A
4th Harmonic						
3659.78	49.8 Pk	5.1 / 31.2 / 38.8	47.2	V / 1.0 / 287.0	-6.8	N/A
3659.78	45.9 Pk	5.1 / 31.2 / 38.8	43.3	H / 1.0 / 160.0	-10.7	N/A
3rd Harmonic Horizontal						
2744.82	46.9 Pk	4.3 / 28.9 / 38.2	41.9	H / 1.0 / 130.0	-12.1	N/A
Harmonics 5 and 8						
4574.71	50.1 Pk	6.7 / 32.1 / 40.5	48.5	H / 1.0 / 185.0	-5.5	N/A
7319.43	40.2 Pk	8.2 / 35.7 / 40.4	43.7	H / 1.2 / 295.0	-10.3	N/A
7319.43	42.1 Pk	8.2 / 35.7 / 40.4	45.6	V / 1.0 / 188.0	-8.4	N/A
4574.69	52.5 Pk	6.7 / 32.1 / 40.5	50.9	V / 1.0 / 65.0	-3.1	N/A
Harmonics 9 and 10						
8234.36	49.0 Pk	8.4 / 36.4 / 47.1	46.8	V / 1.3 / 65.0	-7.2	N/A
9149.31	52.5 Pk	8.8 / 37.5 / 48.1	50.8	V / 1.0 / 355.0	-3.2	N/A
9149.31	46.8 Pk	8.8 / 37.5 / 48.1	45.0	H / 1.0 / 355.0	-9.0	N/A
8234.34	44.5 Pk	8.4 / 36.4 / 47.1	42.2	H / 1.0 / 355.0	-11.8	N/A
High Channel Reverifying 3rd and 4th harmonics.						
2783.06	42.1 Pk	4.3 / 29.0 / 38.3	37.2	H / 1.0 / 128.0	-16.8	N/A
3710.45	36.8 Pk	5.2 / 31.3 / 38.6	34.6	H / 1.0 / 0.0	-19.4	N/A
3710.45	37.4 Pk	5.2 / 31.3 / 38.6	35.3	V / 1.0 / 0.0	-18.7	N/A
2783.06	44.2 Pk	4.3 / 29.0 / 38.3	39.4	V / 1.0 / 70.0	-14.6	N/A
Harmonics 5 and 8						
4638.47	37.5 Pk	6.9 / 32.2 / 40.4	36.1	V / 1.1 / 50.0	-17.9	N/A
7421.49	32.0 Pk	8.2 / 35.9 / 40.0	36.1	V / 1.0 / 0.0	-17.9	N/A
7421.49	32.6 Pk	8.2 / 35.9 / 40.0	36.7	H / 1.0 / 0.0	-17.3	N/A

Intertek ETL Semko
5541 Central Avenue, Suite 110
Boulder, Colorado 80301
Voice: 303 786 7999 Fax: 303 449 6160

FREQ	LEVEL	CABLE / ANT / PREAMP	FINAL	POL / HGT / AZ	DELTA1 (dB)	DELTA2 (dB)
(MHz)	(dBuV)	(dB) (dB\m) (dB)	(dBuV)	(m) (DEG)	15.209 >1GHz	N/A
4638.47	35.6 Pk	6.9 / 32.2 / 40.4	34.2	H / 1.1 / 290.0	-19.8	N/A
9th Harmonic						
8350.00	42.6 Pk	8.4 / 36.4 / 47.6	39.8	H / 1.0 / 0.0	-14.2	N/A
8350.00	41.6 Pk	8.4 / 36.4 / 47.6	38.8	V / 1.0 / 0.0	-15.2	N/A
End of Run						

Intertek ETL Semko
5541 Central Avenue, Suite 110
Boulder, Colorado 80301
Voice: 303 786 7999 Fax: 303 449 6160

List of Equipment Utilized for Final Test

Sample1 with 5dB gain rod antenna.

Intertek ETL Semko
5541 Central Avenue, Suite 110
Boulder, Colorado 80301
Voice: 303 786 7999 Fax: 303 449 6160

Project Report

Begin Date: 11/8/2005 **End Date:** 11/18/2005

Technician Mike Spataro **Project** BC500356

Capital Asset ID	Manufacturer	Model #	Serial #	Description	Test Performed	Service Type	Service Date	Service Due
6	Hewlett-Packard	8594E	3223A00145	Spectrum Analyzer	R Radiated Emissions	For Cal	1/6/2005	1/6/2006
135	EMCO	3146	9402-3775	Log Periodic Antenna (200-1000MHz)	R Radiated Emissions	For Cal	9/30/2005	9/30/2006
138	EMC TEST SYSTEMS	3109	3142	Biconical Antenna 30-300MHz	R Radiated Emissions	For Cal	9/30/2005	9/30/2006
187	EMCO	3115	9205-3886	Horn Antenna 1-18GHz	R Radiated Emissions	For Cal	1/18/2005	1/18/2006
195	EMCO	6502	9205-2738	Magnetic loop	R Radiated Emissions	For Cal	7/13/2005	7/13/2006
202	Avantek	AWT-18037	1002	RF Pre-Amplifier (8-18 GHz)	R Radiated Emissions	For Ver	4/4/2005	4/4/2006
203	Avantek	AFT97-8434-10F	1007	RF Pre-Amplifier (4-8 GHz)	R Radiated Emissions	For Ver	4/4/2005	4/4/2006
213	Mini-Circuits Lab	ZHL-42	N052792-2	Amplifier	R Radiated Emissions	For Ver	5/6/2005	5/6/2006
248	Hewlett-Packard	8447F	3113A05545	9 kHz- 1.3GHz Pre Amp	R Radiated Emissions	For Ver	5/6/2005	5/6/2006
259	Hewlett-Packard	E7405A	My44211889	Spectrum Analyzer	R Radiated Emissions	For Cal	12/1/2004	12/1/2005

Intertek ETL Semko
5541 Central Avenue, Suite 110
Boulder, Colorado 80301
Voice: 303 786 7999 Fax: 303 449 6160

List of Equipment Utilized for Final Test

Sample2 with 10dB gain 6 element directional antenna.

Intertek ETL Semko
5541 Central Avenue, Suite 110
Boulder, Colorado 80301
Voice: 303 786 7999 Fax: 303 449 6160

Project Report

Begin Date: 3/10/2006 **End Date:** 3/10/2006

Technician Jordan Belliston **Project** 3091658

Capital Asset ID	Manufacturer	Model #	Serial #	Description	Test Performed	Service Type	Service Date	Service Due
18880	Hewlett-Packard	85650A	2811A01300	Q.P Adapter	R Radiated Emissions	For Cal	11/8/2005	11/8/2006
18881	Hewlett-Packard	85662A	2403A08749	Display Section	R Radiated Emissions	For Cal	8/8/2005	8/8/2006
18882	Hewlett-Packard	8566B	2410A00154	Spectrum Analyzer (dc-22 GHz)	R Radiated Emissions	For Cal	8/8/2005	8/8/2006
18886	TENSOR	4105	2020	Ridged Guide Antenna 1-18GHz	R Radiated Emissions	For Cal	5/9/2005	5/9/2006
18888	EMCO	3146	9402-3775	Log Periodic Antenna (200-1000MHz)	R Radiated Emissions	For Cal	9/30/2005	9/30/2006
18889	EMC TEST SYSTEMS	3109	3142	Biconical Antenna 30-300MHz	R Radiated Emissions	For Cal	9/30/2005	9/30/2006
18897	EMCO	6502	9205-2738	Magnetic loop	R Radiated Emissions	For Cal	7/13/2005	7/13/2006
18900	Avantek	AFT97-8434-10F	1007	RF Pre-Amplifier (4-8 GHz)	R Radiated Emissions	For Ver	4/4/2006	4/4/2007
18901	Avantek	AWT-18037	1002	RF Pre-Amplifier (8-18 GHz)	R Radiated Emissions	For Ver	4/4/2006	4/4/2007
18906	Mini-Circuits Lab	ZHL-42	N052792-2	Amplifier	R Radiated Emissions	For Ver	4/4/2006	4/4/2007
18912	Hewlett-Packard	8447F	3113A05545	9 kHz- 1.3GHz Pre Amp	R Radiated Emissions	For Ver	5/6/2005	5/6/2006

Intertek ETL Semko
5541 Central Avenue, Suite 110
Boulder, Colorado 80301
Voice: 303 786 7999 Fax: 303 449 6160

Appendix B

Test Plan

and

Constructional Data Form

Intertek ETL Semko
5541 Central Avenue, Suite 110
Boulder, Colorado 80301
Voice: 303 786 7999 Fax: 303 449 6160

Request for Estimate & Test Plan

Laboratory/Agent Information:

Agent/Test Lab:	International Approvals Laboratories, LLC
Contact:	Todd Seeley
Title:	Principal Engineer (Services Development Focus)
Phone Number:	(303) 402-5272
Cell Number:	(303) 503-2491
Fax Number:	(303) 449-6160
Email Address:	todd@ialabs.com

Client Information:

License Holder:	Lexycom Technologies, Inc.
Address:	1227 Reserve Dr
Contact:	Aleksey Pozhidaev
Title:	engineer
Phone Number:	(303) 774-7822
Fax Number:	(303) 774-7828
Email Address:	aleksey@lexycominc.com

Please provide all pertinent information below and email this Form to Todd and Amy at todd@ialabs.com and Amy@ialabs.com for a quotation:

Estimates Requested:

EMC Testing	
☐ Requesting Estimate	☐ No Estimate Required
☐ Pre-Compliance Scans	☐ Engineering Test

Radio Device Testing and Certification	
☒ Requesting Estimate	☐ No Estimate Required
☐ FCC Certification	☐ Industry Canada Certification (Receivers required)
☐ Class 2 Notification Under the R&TTED	

Safety Testing and Certification	
☐ Requesting Estimate	☐ No Estimate Required
☐ NRTL Listing	☐ 1 Day Pre-Assessment (conducted at your facility)
☐ Letter of Findings	☐ CB Report Covering all country Deviations
☐ CE Report to Cover the LVD	☐ CB Report Covering - Specify Countries:
Please list all applicable standards that you would like your device certified under:	

Intertek ETL Semko
5541 Central Avenue, Suite 110
Boulder, Colorado 80301
Voice: 303 786 7999 Fax: 303 449 6160

General Product Information:

Product/Model Number(s):	Tiamis-800
Description of product(s):	902…928 MHz Software Defined Radio transceiver
Intended Use:	☐ Household ☒ Commercial ☒ Industrial ☐ Hospital ☐ Life Supporting
Intended Location:	☒ Dry ☐ Damp ☐ Wet ☐ Hazardous Location
Product Type:	☐ Prototype ☒ Production Sample ☐ Manufacturing Design Change: Please Describe
If there is more than one product what are the differences?	
Is the Product Enclosure:	☐ Metal ☐ Plastic ☐Both

Size:	Length:6.45	Width:3	Height:0.5	Weight:100 g

What Voltages/Current does the EUT run at?	Rated Voltage:4.5…36 VDC Rated Current:1.5A max @ 4.5V, scaled down proportionaly to the voltage # of Phases/Conductors: / # of Power Cords:
Are their multiple suppliers of power supplies?	☐ Yes ☒ No If Yes Please Describe:
Are there Multiple Modes of Operation?	☐ Yes ☒ No If Yes Please Describe:
Can all modes of operation be operated simultaneously?	☐ Yes ☐ No Explain:
In which countries will you be selling the product?	USA

Intertek ETL Semko
5541 Central Avenue, Suite 110
Boulder, Colorado 80301
Voice: 303 786 7999 Fax: 303 449 6160

EMC Information:

What EMC certifications are desired?	☒ FCC/ICES (US & Canada) ☐ CE / EMC / MMD ☐ BSMI (Taiwan) ☐ VCCI (Japan) ☐ SII (Israel) ☐ AS/NZS (Australia/New Zealand) ☐ Other: Please Specify

Highest frequency utilized for device operation:	928

List of Clock Frequencies:	main clock @ 26 MHz, VCO covering 654…829 MHz, DDS chip output frequency 132…148 MHz

What is the time that it takes for the device to complete a full cycle of operation? (time required to identify any degradation in performance)	~20 msec

Total Number of I/O Cables: # Greater than 3m (9.75 feet) in Length # Greater than 30m (97.5 feet) in Length # of cables at a longer length (specify)	1

Number of Dedicated Earth Equalization Ports	1

Number of Ethernet and/or Telecommunications Ports	1

When the device is a compilation of subsystems (in separate chassis) how many interconnecting I/O's are greater than 1 meter in length between the Subsystem chassis?	N/A

For medical devices: Are there any coupled or direct patient contact points on the device?	☐ Yes ☐ No Describe:

Intertek ETL Semko
5541 Central Avenue, Suite 110
Boulder, Colorado 80301
Voice: 303 786 7999 Fax: 303 449 6160

Radio Information:

What Radio certifications are desired?	☒ FCC (USA) ☐ Industry Canada ☐ ETSI (R&TTE) ☐ Other: Please Specify
Operating Frequency:	902…928
RF Output Power:	programmable up to 1 Watt
Is there an RF Conducted Port?	☒ Yes ☐No Description:SMA
Number of Antennas & Description: (Internal, External, Known Gain, etc.)	2
Modulation Technique:	FSK
Number of Channels/Number of Discrete frequencies per Channel:	50 minimum/1
Can the device be operated in CW Mode?	☒ Yes ☐ No
What is the lowest utilized frequency within the device?	902

Notes: Please ensure to bring a notch filter covering your fundamental operating frequency.

Intertek ETL Semko
5541 Central Avenue, Suite 110
Boulder, Colorado 80301
Voice: 303 786 7999 Fax: 303 449 6160

Safety Information:

Has the device been tested and certified for product safety before? A. If it has been previously tested, to which standard and by which organization? B. Can you provide the test report?	☐ Yes ☒ No Standard tested to: Organization tested by: ☐ Yes ☐ No

Is the power supply	☒ An approved off the shelf power supply OR ☐ A Custom Model that will need evaluation/ certification

Does the device contain batteries?	☐ Yes ☒ No What Type? How Many?

What technology is used? (i.e., lasers, X Ray, etc.)	

If Laser:	Class:	Output Power:	Beam Divergence Angle:	Wavelength:

Is the product a Medical Device?	☐ Yes ☐ No
Is it an In Vitro Diagnostic Device?	☐ Yes ☐ No
Testing location: (to be filled in by IALabs)	

Intertek ETL Semko
5541 Central Avenue, Suite 110
Boulder, Colorado 80301
Voice: 303 786 7999 Fax: 303 449 6160

Additional Information:

This information is required to be filled in to act as a test plan and constructional data form required to be supplied as part of the test report in accordance to the required standards. This information is not required to obtain a quote.

Support Equipment:

IALabs requires our customers provide all support equipment necessary to fully operate the EUT. This includes any filters required for testing radio devices.

Item	Description	Manufacturer	Model No.
1			
2			
3			
4			

Cabling Information:

Cable	Function*	Type of Shield	Length	Connectors	Connection**
1	**LMR-240 RF cable**		5 feet	**N, SMA**	
2					
3					
4					
5					
6					

* Function examples (Ethernet, RS232, USB, Analog, physiological parameter, etc.)
** Connection examples (Outside Plant, Patient Coupled, Ring Voltage, etc.)

Monitoring the EUT:

Please provide instructions below on how to observe the EUT to verify proper operation in all modes. (including software revision)

company's representative will be present during the test to provide those instructions

Any other information required: (Notes, Photos, Block Diagrams, Drawings, etc.)

A minimum of a block diagram showing the equipment under test and its support equipment.

technical description of the device is supplied in a separate document

Intertek ETL Semko
5541 Central Avenue, Suite 110
Boulder, Colorado 80301
Voice: 303 786 7999 Fax: 303 449 6160

Appendix C

Measurement Protocol

And

Test Procedures

Intertek ETL Semko
5541 Central Avenue, Suite 110
Boulder, Colorado 80301
Voice: 303 786 7999 Fax: 303 449 6160

MEASUREMENT PROTOCOL

GENERAL INFORMATION

Test Methodology

Conducted and radiated emission testing is performed according to the procedures in ANSI C63.4 & CNS13438.

Justification

The Equipment Under Test (EUT) is configured in a typical user arrangement in accordance with the manufacturer's instructions. A cable is connected to each available port and either terminated with a peripheral into it's characteristic impedance or left unterminated. When appropriate, the cables are manually manipulated with respect to each other to obtain maximum emissions from the unit.

CONDUCTED EMISSIONS

The final level, expressed in dBμV, is arrived at by taking the reading directly from the EMI receiver. This level is compared directly to the applicable limit.

To convert between dBμV and μV, the following conversions apply:

- dBμV = 20(log μV)
- μV = Inverse log(dBμV/20)

RADIATED EMISSIONS

The final level, expressed in dBμV/m, is arrived at by taking the reading from the spectrum analyzer (Level dBμV) and adding the antenna correction factor and cable loss factor (Factor dB) to it. This result then has the applicable limit subtracted from it to provide the Delta which gives the tabular data as shown in the data sheets in Attachment B. The amplifier gain is automatically accounted for by using an analyzer offset.

Example: At a Test Frequency of 30 MHz, with a peak reading on the spectrum analyzer or measuring receiver of 14 dBμV:

Measured Level	+	Transducer & Cable Loss factor	=	Corrected Reading	Specification Limit	-	Corrected Reading	=	Delta Specification
(dBμV)		(dB)		(dBμV/m)	(dBμV/m)		(dBμV/m)		
14.0		**14.9**		**28.9**	**40.0**		**28.9**		**-11.1**

Intertek ETL Semko
5541 Central Avenue, Suite 110
Boulder, Colorado 80301
Voice: 303 786 7999 Fax: 303 449 6160

DETAILS OF TEST PROCEDURES

General Standard Information

The test methods used comply with ANSI C63.4-2003 - "Methods of Measurement of Radio-Noise Emissions from Low-Voltage Electrical and Electronic Equipment in the Range of 9 kHz to 40 GHz."

Conducted Emissions

Conducted emissions on the 50 Hz and/or 60 Hz power interface of the EUT are measured in the frequency range of 150 kHz to 30 MHz. The measurements are performed using a receiver, which has CISPR characteristic bandwidth and quasi-peak detection, and a Line Impedance Stabilization Network (LISN), with 50 Ω/50 μH (CISPR 16) characteristics. Table top equipment is placed on a non-conducting table 80 centimeters above the floor and is positioned 40 centimeters from the vertical ground plane (wall) of the screen room. In some cases, a pre-scan using a spectrum analyzer is initially performed on the units comprising the system under test to locate the highest emissions. If the minimum passing margin appears to be less than 20 dB with a peak mode measurement, the emissions are re-measured using a tuned receiver or spectrum analyzer with quasi-peak and average detection and recorded on the data sheets.

Radiated Emissions

Radiated emissions from the EUT are measured in the frequency range of 30 to 22GHz using a spectrum analyzer and appropriate broadband linearly polarized antennas. Measurements between 30 MHz and 1000 MHz are made with 120 kHz/6 dB bandwidth and quasi-peak detection and measurements above 1000 MHz are made with a 1 MHz/6 dB bandwidth and peak detection. Table top equipment is placed on a 1.0 X 1.5 meter non-conducting table 80 centimeters above the ground plane. Floor standing equipment is placed directly on the turntable/ground plane. Interface cables that are closer than 40 centimeters to the ground plane are bundled in the center in a serpentine fashion so they are at least 40 centimeters from the ground plane. Cables to simulators/testers (if used in this test) are routed through the center of the table and to a screen room located outside the test area. The antenna is positioned 3, 10 or 30 meters horizontally from the EUT. To locate maximum emissions from the test sample the antenna is varied in height from 1 to 4 meters, measurement scans are made with both horizontal and vertical antenna polarizations and the EUT are rotated 360 degrees.

Intertek ETL Semko
5541 Central Avenue, Suite 110
Boulder, Colorado 80301
Voice: 303 786 7999 Fax: 303 449 6160

Conducted Emissions Diagram:

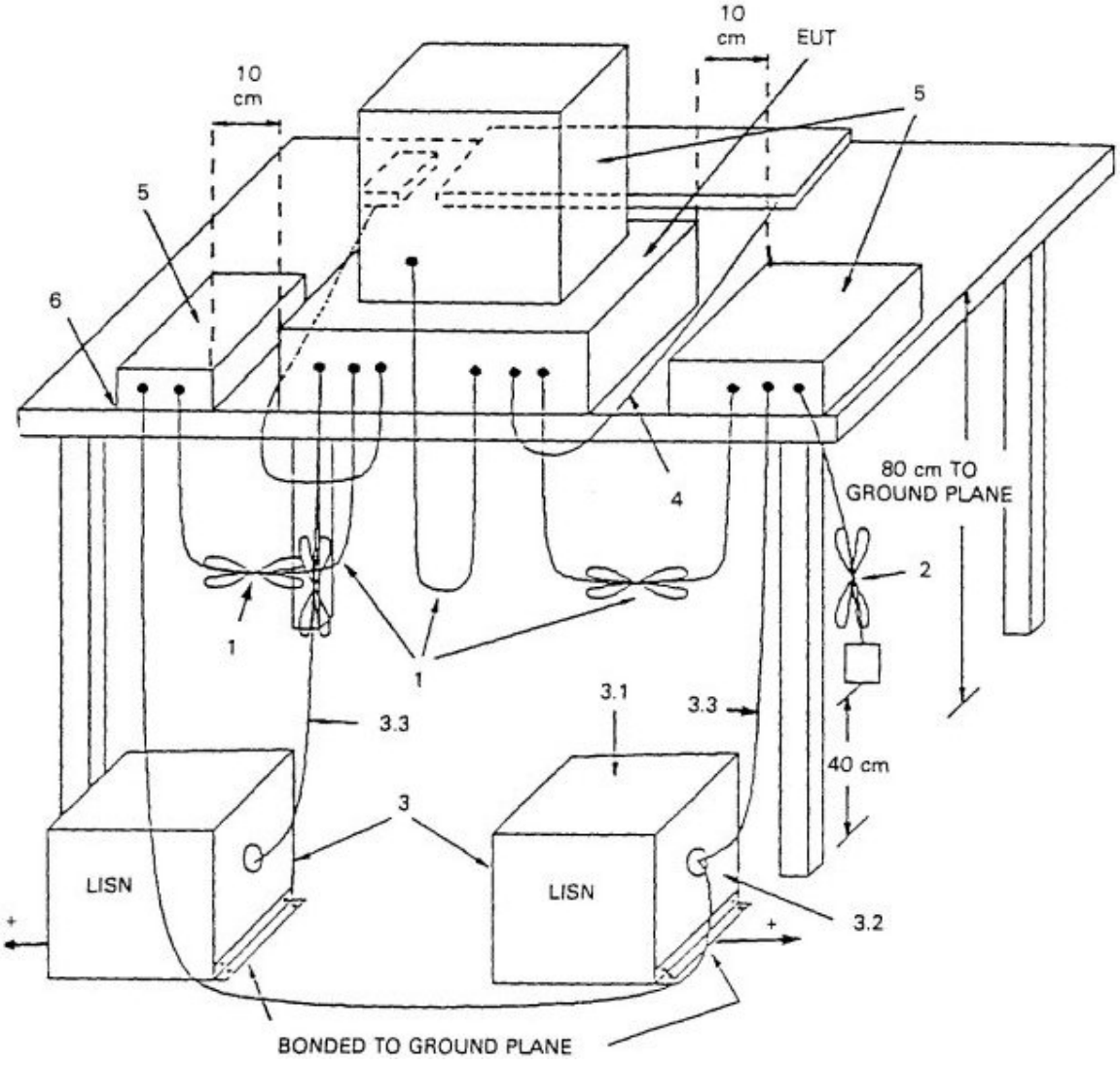

Intertek ETL Semko
5541 Central Avenue, Suite 110
Boulder, Colorado 80301
Voice: 303 786 7999 Fax: 303 449 6160

Radiated Emissions Diagram:

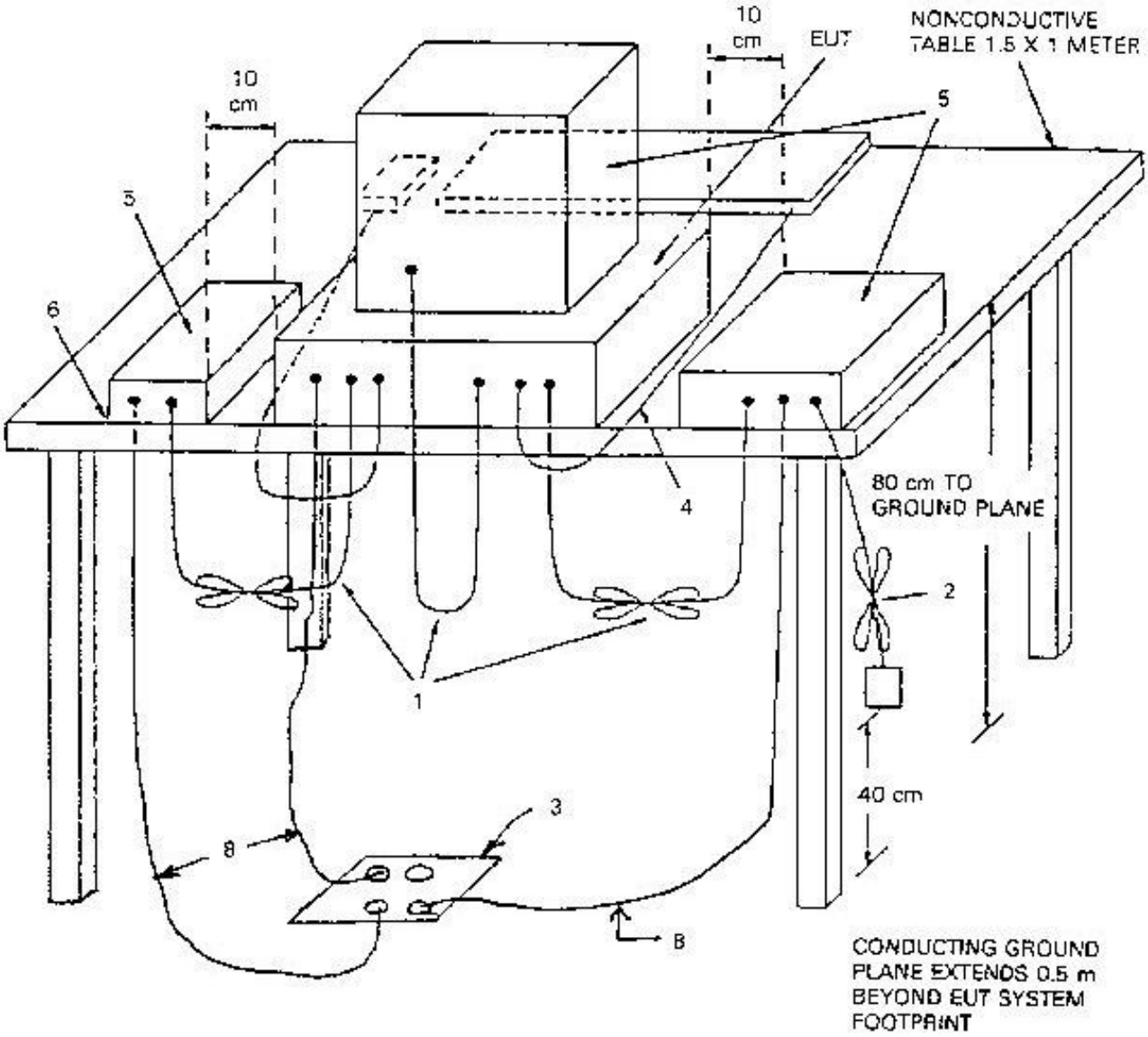

Intertek ETL Semko
5541 Central Avenue, Suite 110
Boulder, Colorado 80301
Voice: 303 786 7999 Fax: 303 449 6160