DNP

DIGITAL PHOTO PRINTER

DP-DS820DX

User Guide

Version 0.2.0

©2023 Dai Nippon Printing Co., Ltd.

2023100502

WARNING

To reduce the risk of fire or electric shock, do not expose this apparatus to rain or moisture. To avoid electrical shock, do not open the cabinet. Refer servicing to qualified personnel only.
This apparatus must be earthed.
For pluggable equipment, the socket-outlet be installed near the equipment and shall be easily accessible.
To disconnect the main power, unplug the AC IN connector.
This unit has no power switch.
When installing the unit, incorporate a readily accessible disconnect device in the fixed wiring, or connect the power plug to an easily accessible socket-outlet near the unit. If a fault should occur during operation of the unit, operate the disconnect device to switch the power supply off, or disconnect the power plug.

Warning on power connection

Use a proper power cord for your local power supply.

1. Use the approved Power Cord (3-core mains lead) /Appliance Connector / Plug with earthing-contacts that conforms to the safety regulations of each country if applicable.
2. Use the Power Cord (3-core mains lead) / Appliance Connector /Plug conforming to the proper ratings (Voltage, Ampere).

If you have questions on the use of the above Power Cord/Appliance Connector/Plug, please consult a qualified service personnel or the distributor.

For the Customer in USA

FCC CAUTION
Changes or modifications not expressly approved by the party responsible for compliance could void the user's authority to operate the equipment.

Note: This equipment has been tested and found to comply with the limits for a Class A digital device, pursuant to part 15 of the FCC Rules. These limits are designed to provide reasonable protection against harmful interference when the equipment is operated in a commercial environment. This equipment generates, uses, and can radiate radio frequency energy and, if not installed and used in accordance with the instruction manual, may cause harmful interference to radio communications. Operation of this equipment in a residential area is likely to cause harmful interference in which case the user will be required to correct the interference at his own expense.

Caution: Use shielded cables to connect this computers. Any changes or modifications not expressly approved by the grantee of this device could void the user's authority to operate the equipment.

FCC statement
This device complies with part 15 of the FCC Rules. Operation is subject to the following two conditions: (1) This device may not cause harmful interference, and (2) this device must accept any interference received, including interference that may cause undesired operation.

The identification, by name, address and telephone number, of a responsible party located within the United States.

DNP Imagingcomm America Corporation
4524 Enterprise Drive NW
Concord, NC 28027
United States
Telephone (704) 784-8100
www.dnpimagingcomm.com

This transmitter must not be co-located or operated in conjunction with any other antenna or transmitter.
This equipment complies with FCC radiation exposure limits set forth for an uncontrolled environment and meets the FCC radio frequency (RF) Exposure Guidelines as this equipment has very low levels of RF energy.

Table of Contents

Introduction **5**

For Safe Operation **5**

Caution for installation **8**

Printer Installation **9**

Checking the contents 9
Name of components 10
Connecting the power cord and a computer 11
Ribbon, Roll Paper, Sheet Paper 12
Setting the media (ribbon, roll paper, sheet paper) 13
Switching the position of the paper guide 19
Disposing of paper scrap 20
Slit cutter/Creaser 21
Slit cutter 21
Creaser 21

Troubleshooting **22**

Error display 22
Solving errors 24
The ribbon is caught in the printer 24
The printer is jammed with roll paper 25
The printer is jammed with sheet paper 27
The printer stopped with the paper partially cut 29
The printer stopped with the paper partially creased 29
The slit cutter stopped halfway 30
The power has been cut during printing 31

Cleaning **32**

Platen roller 32
Thermal print head 33

Repacking **34**

Specifications **35**

Safety precautions

Note that the contents of directions for use and safety precautions correspond to the safety standards as of the time this manual has been created.

Remodeling

For safety, do not remodel this product after purchase.

Copyright

Copyrights, trademarks or any other intellectual property rights whatsoever that pertain to documents, programs or other items provided with this product, are ascribed to Dai Nippon Printing Co., Ltd., or the respective other holders of rights. Except in cases permitted by applicable laws, these may not be duplicated or used without consent from Dai Nippon Printing Co., Ltd.

Introduction

Thank you for purchasing this product.
This document explains how to handle and operate this product.
Please read this document carefully before use.
Be sure to read “For Safe Operation” (P.5-7), and operate the product correctly.

For Safe Operation

Be sure to read this document before using the product. After reading, keep it in a safe place where it can be easily accessed as needed.
The warnings listed here are to ensure proper use of the prod uct, to prevent physical injury to the customer or other persons, and to prevent property damage. Please follow these warnings.

Warnings and Cautions

The possible levels of injury or damage due to misuse are categorized below as Warnings and Cautions, according to the degree of danger involved.

Warning	Accidents caused by failure to heed the warnings accompanying this symbol may lead to serious or fatal injury.
Caution	Accidents caused by failure to heed the cautions accompanying this symbol may lead to physical injury or property damage.

Symbols

The symbols shown have the following meanings:

	This symbol indicates warning and caution messages. The warning content is indicated in or near the symbol.
	This symbol indicates prohibited actions. The prohibited action is indicated in or near the symbol.
	This symbol indicates necessary actions or instructions. The action is indicated in the symbol.

Warning

	• This unit has no power switch. When installing the unit, incorporate a readily accessible disconnect device in the fixed wiring, or connect the power plug to an easily accessible socket-outlet near the unit. If a fault should occur during operation of the unit, operate the disconnect device to switch the power supply off, or disconnect the power plug. • Use the product only with the designated voltage and frequency. Improper connection may cause electric shock or fire. • Avoid connecting too many devices to the outlet used for this product and using extension cords. The outlet may overheat and cause a fire. • Do not damage, cut, bundle, or alter the power cord. Also, the cord may be damaged if heavy objects are placed on it, or if pulled or bent with excessive force, and it may cause a fire. • Do not install the product in places with salinity or corrosive gases in the air. This may cause a fire. • Do not block the vents of the product. Heat may build up in the product and cause a malfunction or fire. • Do not stand on or place heavy objects on the product. Also, do not apply excessive force on the buttons, switches, terminals, etc. This may damage the product and cause injury to the user or other people. • Be careful not to injure yourself or damage other things on the edges of the product. • Do not use this product for applications involving human life (such as medical, space, aeronautic, or other applications that require extreme reliability).
	• The DP-DS820DX weighs 22 kg (48.50 lbs.). When moving the product, have two people lift it by the handles in a way that avoids physical stress. Lifting recklessly or dropping the product may cause physical injury. • Place the product as close to an outlet as possible to be able to easily unplug the power cord in case of problem. • If there is dust on the plug, clean it off thoroughly. It may cause an electric shock or a short circuit. • If metal objects or liquids have fallen into the product, or if there is smoke, a strange odor, or any other abnormality, immediately unplug the power cord, and then contact a service representative. Do not continue using the product if it is damaged or not operating properly. This may cause an electrical shock, a short circuit, a fire, or damage the product.
	• Be sure to ground the product. Otherwise, a short circuit may occur, causing an electric shock or fire.
	• Do not plug or unplug the cord with wet hands. This may cause an electric shock.
	• Do not open the product, disassemble internal parts, or modify the product. It may cause an electric shock, fire, or injury, or a product malfunction. For internal check-ups, adjustments, or repair, please contact a service representative.

Caution

	• Do not install the product in dusty or humid places. This may cause fire or an electric shock, or damage the product. • Do not install the product on an unstable surface. It may fall and cause injury to the user or other people. • Do not allow foreign objects to enter into the product. They may cause an electric shock, a short circuit, a fire, or damage the product. If something falls into the product, immediately unplug the power cord, and then call a service representative. • Do not open the cover while printing. This may damage the product. • Do not spill or spray liquids or chemicals onto the product. • When cleaning the cover, do not use thinner, trichloroethane, benzene, ketone-based cleaners, or chemically treated cloths. They could discolor or deteriorate the cover.
	• Take care to not cut, scratch, or hurt your hands the edges of the paper or on any sharp edges within the printer. • When putting your hands into the printer for removing the jammed paper or cleaning, use safety lint-free gloves or other proper protective clothing to prevent injury. • At least once a year, unplug the power cord, and clean the prongs and the plug. If dust accumulates, it may cause a fire. • When printing continuously for long periods in a small room, be sure to ventilate the room properly. • If you intend to use the product on a transportation vehicle (train, truck, ship, etc.), please talk to a representative in advance. • When disposing of the product, accessories, packaging materials, or media (paper, ribbon), please abide by local waste removal ordinances. For details, contact your local government offices.
	• When unplugging the cord, always grip the plug. Do not pull on the cord as it may damage the cord and cause an electric shock or fire. • When moving the product, be sure to unplug the power cord. Otherwise, the cord may be damaged, which may cause fire or an electric shock. • For safety, when not using the product for an extended period of time, be sure to unplug the power cord. Otherwise, it may cause an electric shock, fire, or a malfunction.
	• Parts with this warning get extremely hot. Do not touch these parts after printing. There is a danger of burns.
	• Do not touch the gear mechanisms. There is a danger of injury if fingers get caught in spinning gears.
	• Do not insert your fingers into the left side of the slit cutter when it is returning to the standby position. Doing so may result in injury due to fingers being caught.

Caution for installation

- Before using the product, read “For Safe Operation” carefully and observe the instructions therein.
- Use care when moving the product. Never try to carry the product alone. Dropping it may cause injury or property damage.
- Do not use or store the product near a fire, humid places, in direct sunlight, near an air conditioner or heater, or any other location with unusually high or low temperature, strong humidity, or excessive dust.
- Do not place the product where chemical reactions occur, such as in a laboratory.
- Do not install the product where there is salinity or corrosive gas in the air.
- The product must be installed on a firm, level surface where there is ample ventilation.
- Do not put anything on top of the product.
- Do not use the product near a radio or television, and do not use the same wall outlet for the product and a radio or television. Otherwise radio or television reception may be adversely affected.
- Do not use a power voltage or a frequency other than those specified.
- Do not put anything on the power cord or step on it.
- Do not drag or carry the product by the power cord or the USB cable.
- Avoid plugging the power cord into an outlet with many other cables connected.
- Do not bundle the power cord.
- Always grip the plug housing, not the cord, to plug or unplug the power cord.
- Always unplug the power cord before connecting or disconnecting the USB cable.
- Avoid using a long USB cable or connecting it to any noise-producing device. If it is unavoidable, use a shielded cable or twisted pair for each signal.
- Use a shielded USB cable compatible with the USB 2.0 specifications.
- Place the product near the outlet where the power cord can be unplugged easily to shut the power off.
- Use an AC outlet that accepts a three-pronged plug. Otherwise, there may be a danger of electric shock.
- Use as a network printer is not anticipated. Any use in conjunction with a network will be the customer’s sole responsibility.
- This device is not appropriate to be used where a child may be present. Install, store, and use the device where it cannot be reached by a child.

Printer Installation

Checking the contents

Check that the printer and all the following accessories are included in the package.

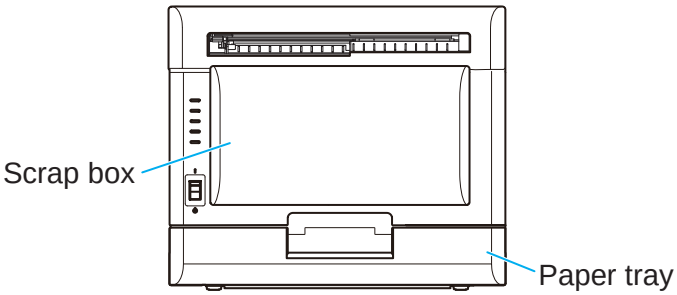

Printer Unit

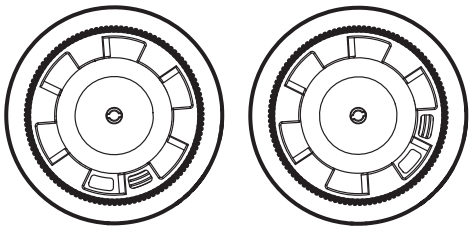

Paper holder

*Set in the printer.

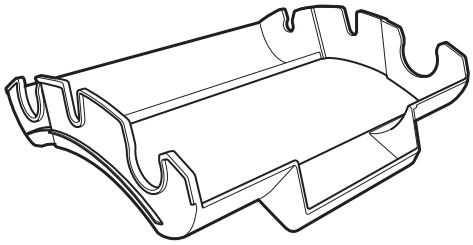

Ribbon cassette

*Set in the printer.
Remove the wrapping
before using them.

⚠ Caution

- Pay particular attention when removing the product from its package, carrying it, or moving it. Dropping the printer may result in personal injury or property damage.
- Do not lift the printer by grasping the wrapping materials. The materials may break and cause the printer to fall.

Name of components

■Front of the unit

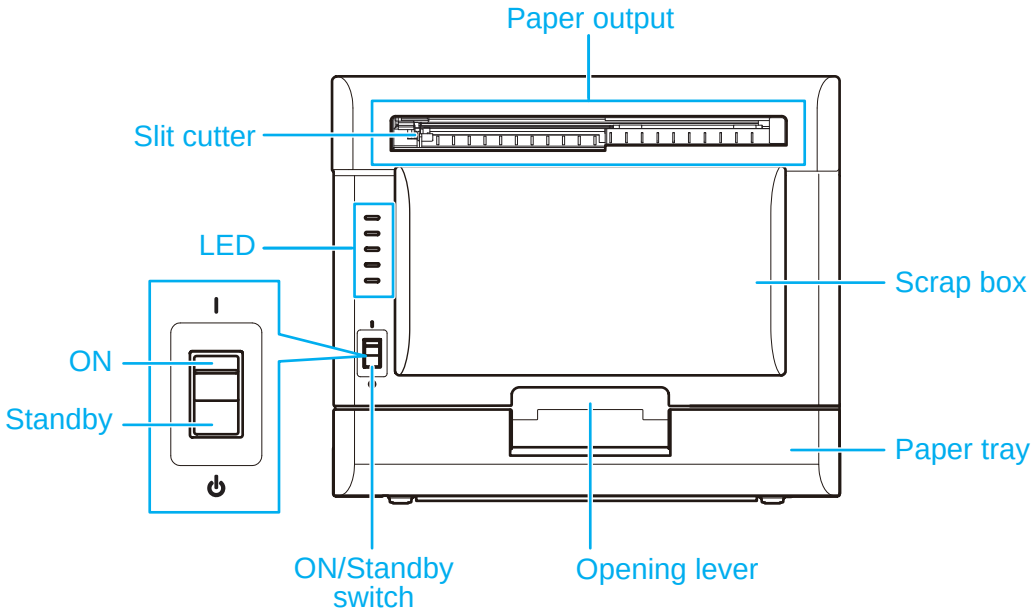

■Back of the unit

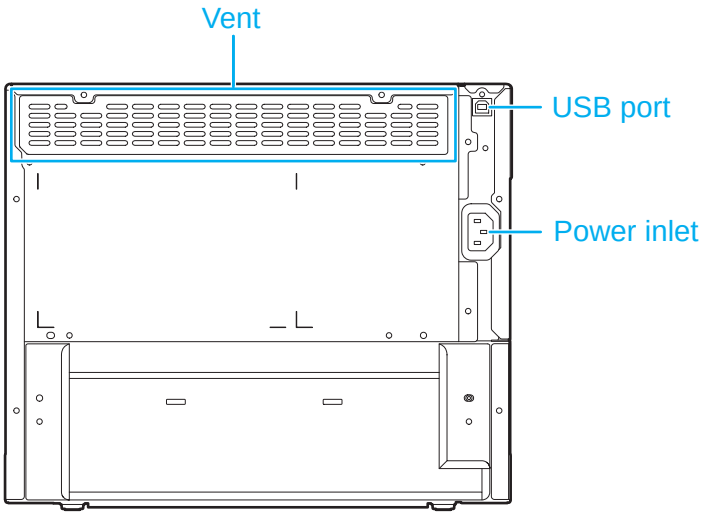

■Side of the unit

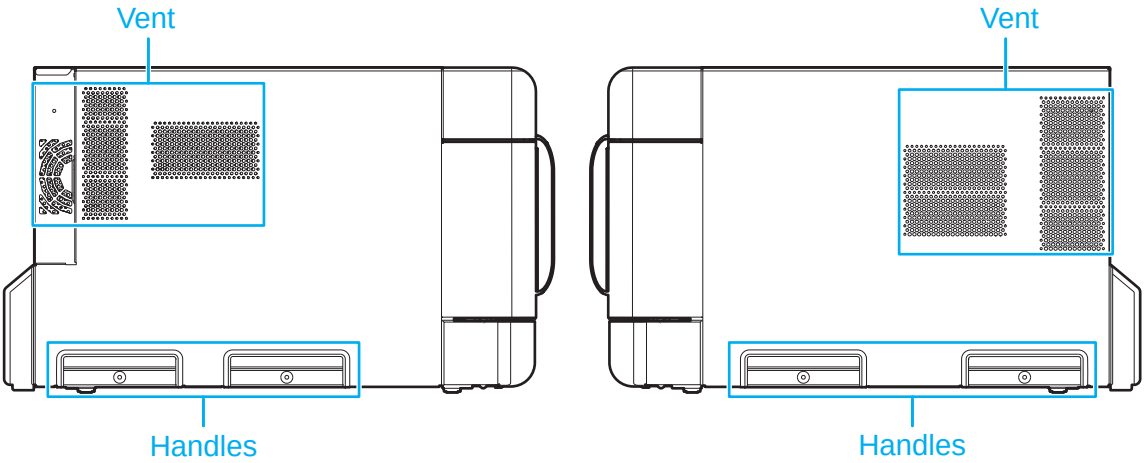

⚠ Caution

- Be careful not to hurt yourself or damage anything on the edges of the printer.

Connecting the power cord and a computer

1 **Make sure that the ON/Standby switch of the printer unit is set to Standby.**

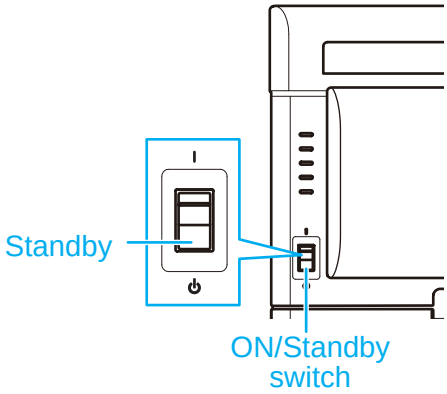

2 **Make sure that the power switch of the computer is set to OFF.**

3 **Plug the connector of the power cord into the printer power inlet.**

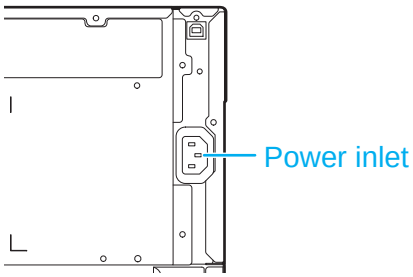

4 **Plug the power cord into an outlet.**

5 **Connect the printer and the computer with a USB cable.**

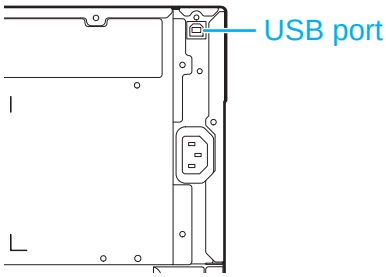

6 **Set the ON/Standby switch of the printer unit and the power switch of the computer to ON.**

⚠ Caution

- Use a shielded USB cable compatible with the USB 2.0 specifications. Otherwise unexpected troubles may arise.

Ribbon, Roll Paper, Sheet Paper

Prepare the media (ribbon, roll paper, sheet paper) with the following widths.

	(8x10")	(8x12")
Ribbon	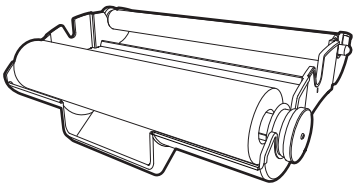	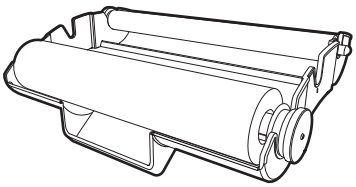
Roll paper	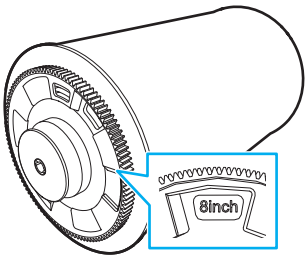	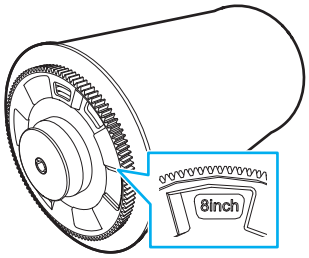
Sheet Paper	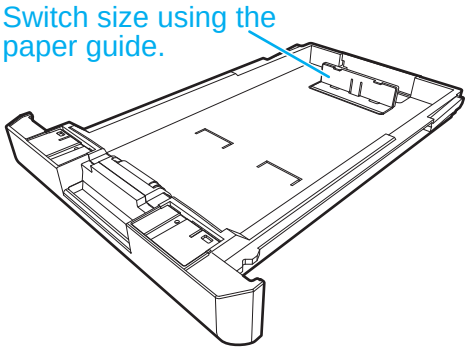	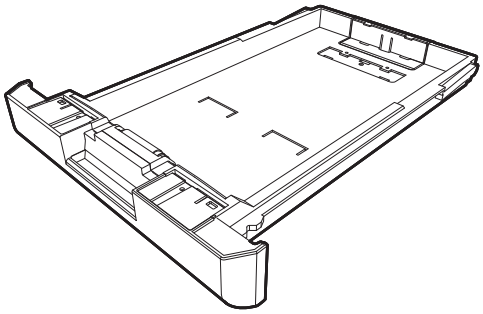

⚠ Caution

- Set the paper and ribbon without putting them directly on the work surface. If dust or dirt adheres to the media when setting it inside the printer unit, it may adversely affect the print quality.

Setting the media (ribbon, roll paper, sheet paper)

1 **Use the opening lever to open the lock, and then pull out the mechanism unit.**

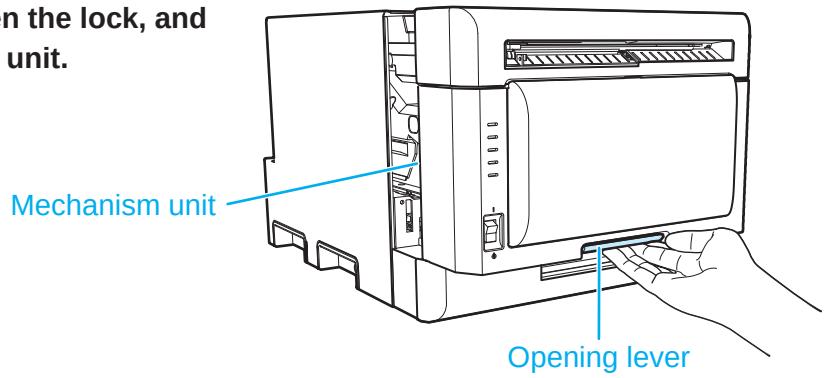

2 **Remove the ribbon cassette from the printer unit.**

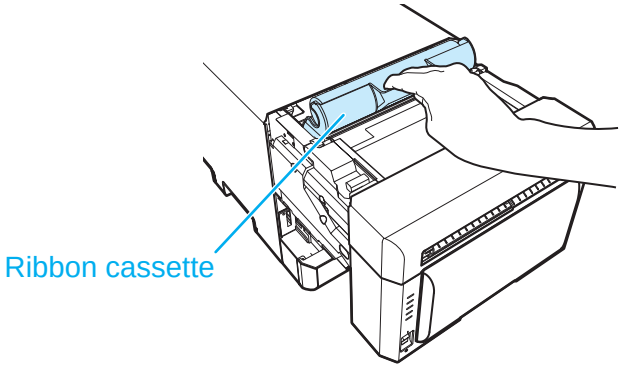

3 **Remove the old ribbon from the ribbon cassette and set the new ribbon.**

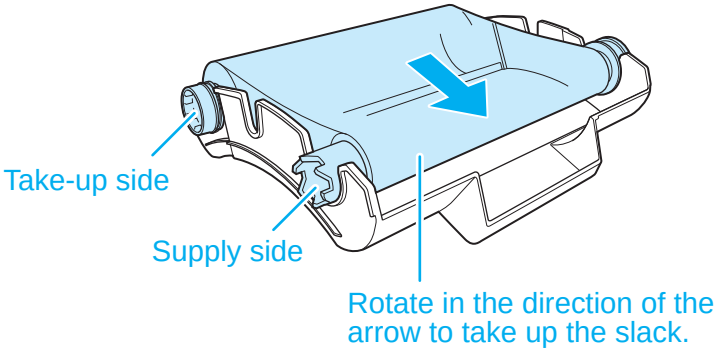

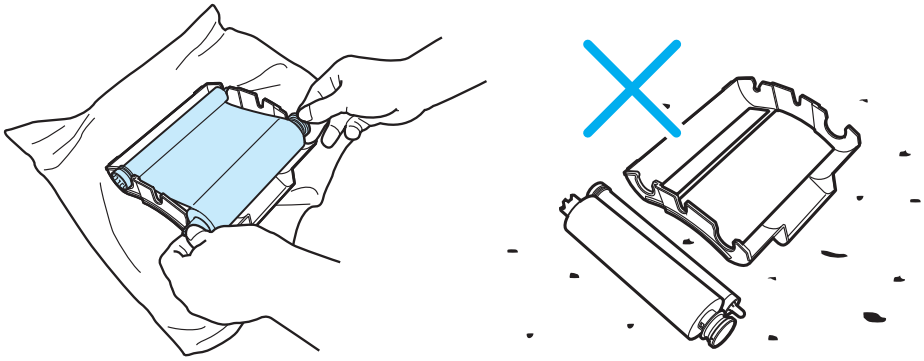

- When setting the media, make sure to use the plastic bag or sheet covering the media. Never put it directly on the table, floor or work spaces.

4 **Install the ribbon cassette to the printer unit.**

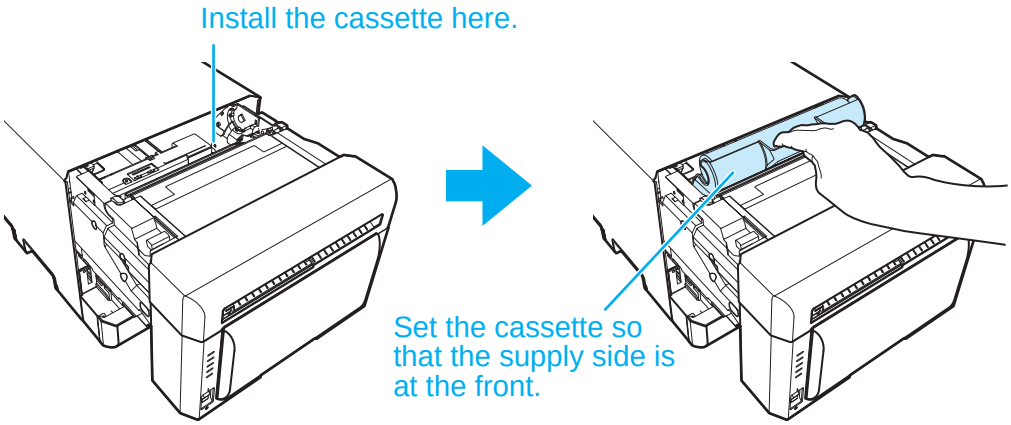

5 **Lift the paper lever and raise the front cover.**

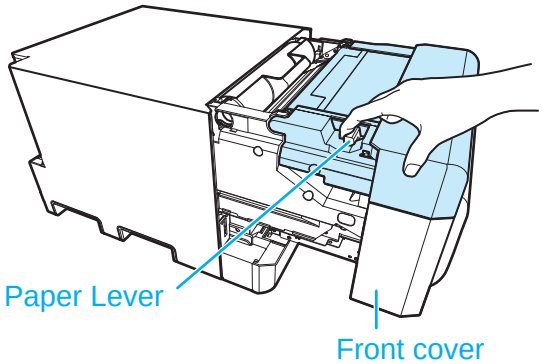

6 **Hold the center of the scrap box and lift it up straight.**

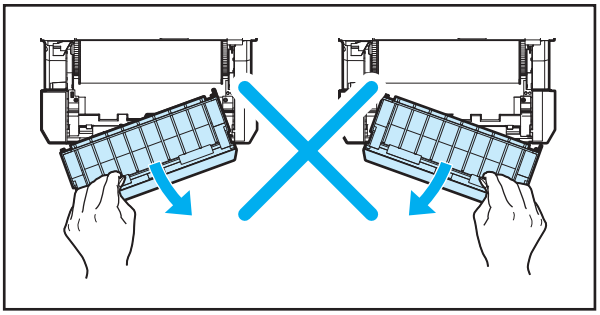

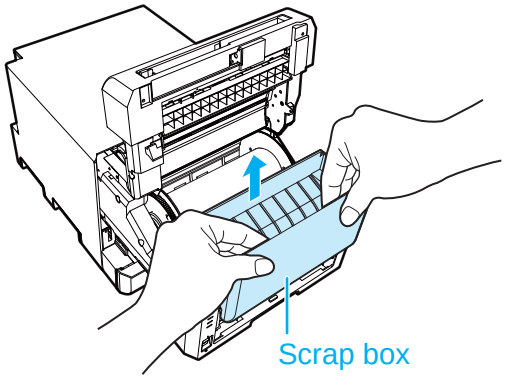

⚠ Caution

- Do not apply too much strength when pulling the mechanism unit out. If detached, the mechanism unit may fall and cause an injury or damage to surrounding objects.
- Lift the trash can straight up with both hands. Be sure not to remove it at an angle. The scrap box may be damaged and the product may not operate normally.
- When the scrap box has been removed, do not touch the cutter on the upper part or you may be cut.
- In order to facilitate color adjustment, media type recognition, and print quantity management, an IC chip is included in the ink ribbon. Note that a ribbon with an IC chip that has not been evaluated and approved may not function properly. (If correct data cannot be read from the IC chip, an alarm will sound. In such a case, ink concentration levels will be lowered in order to protect the product.)

7 **Remove the paper holder from the printer.**

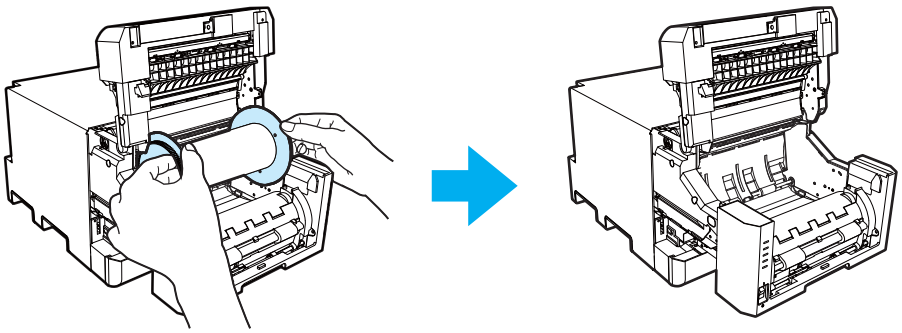

- When removing the paper holders to change the paper roll etc., make sure to place them on the clean surface. Never place them directly on the table or work spaces. If dust or dirt adheres to the media when setting the paper holder inside the printer unit , it may adversely affect the print quality.

8 **Remove the old paper roll from the paper holder, and then set the new roll paper ensuring there are no gaps.**

- When setting the media, make sure to use the plastic bag or sheet covering the media. Never put it directly on the table, floor or work spaces.

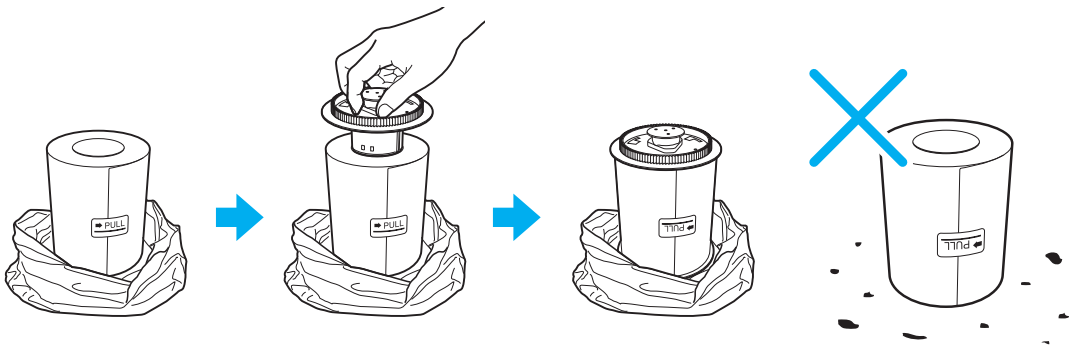

If the paper protrudes, remove the roll from the paper holder and set the edge face of paper flat.

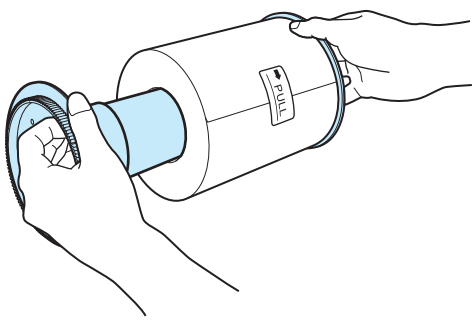

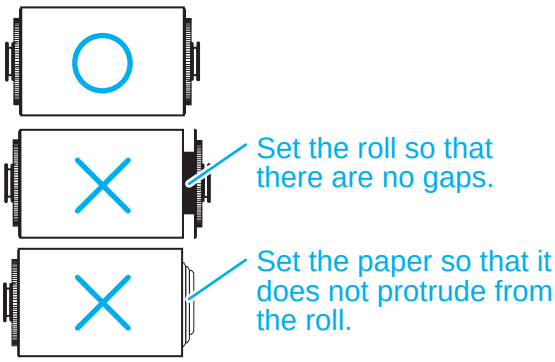

⚠ Caution

- The paper holders with a new paper roll set on it weigh approximately 2.0 kg. Do not let them fall as they may cause physical injury or damage to the paper holders.

9 **Set the paper holder into the printer.**

Set the seal on the paper (→PULL) in the same direction as show on the right.

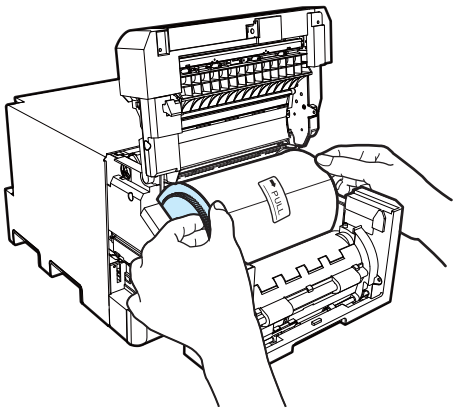

10 **While pressing the paper holder, rotate the paper in the direction of the arrow and advance the leading edge until the buzzer beeps.**

The flashing LED (orange) turns on and stops flashing.

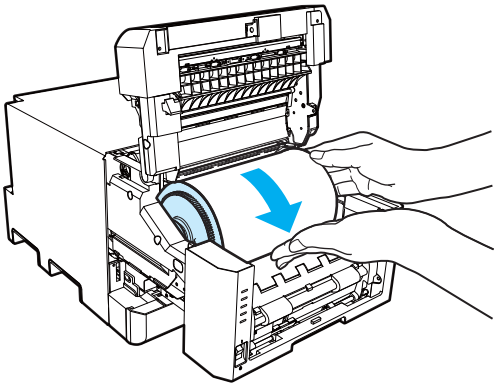

11 **Set the scrap box and close the front cover.**

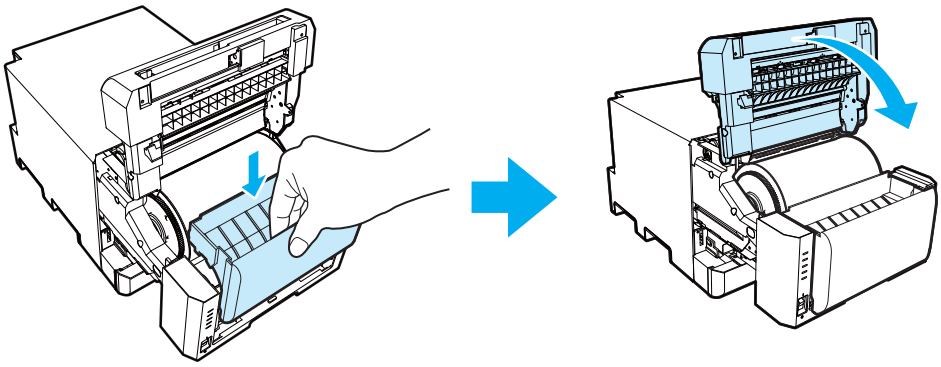

The Printer cannot print when the scrap box has been removed.
If the front cover is closed when there is no scrap box, the scrap box missing error will occur and the ERROR LED (red) will flash.
Always set the scrap box in the printer. Otherwise foreign objects and dust may enter the printer and affect print quality.

12 Close the mechanism unit.

When the mechanism unit is closed, the printer starts paper initialization. (Five blank sheets are output.) Paper initialization cuts off the outer layer of the paper that may be dirty. Note that paper initialization is not carried out if the printer ON/Standby switch is set to ON after the paper is set.

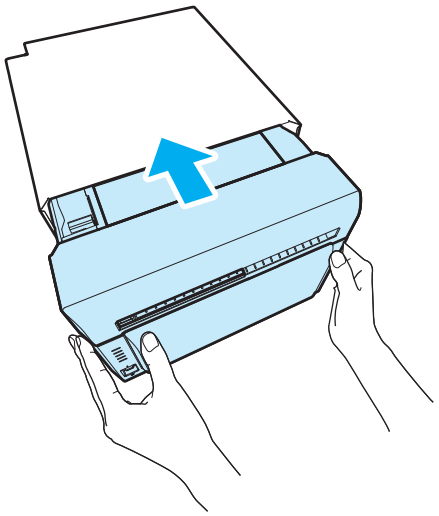

13 Pull out the paper tray.

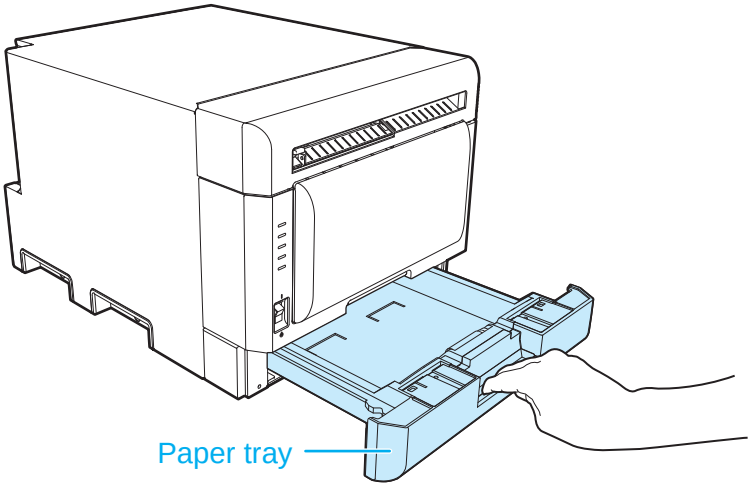

⚠ Caution

- Pulling out the paper tray with excessive force may result in damage. Pull it out slowly.

14 Set the sheet paper.

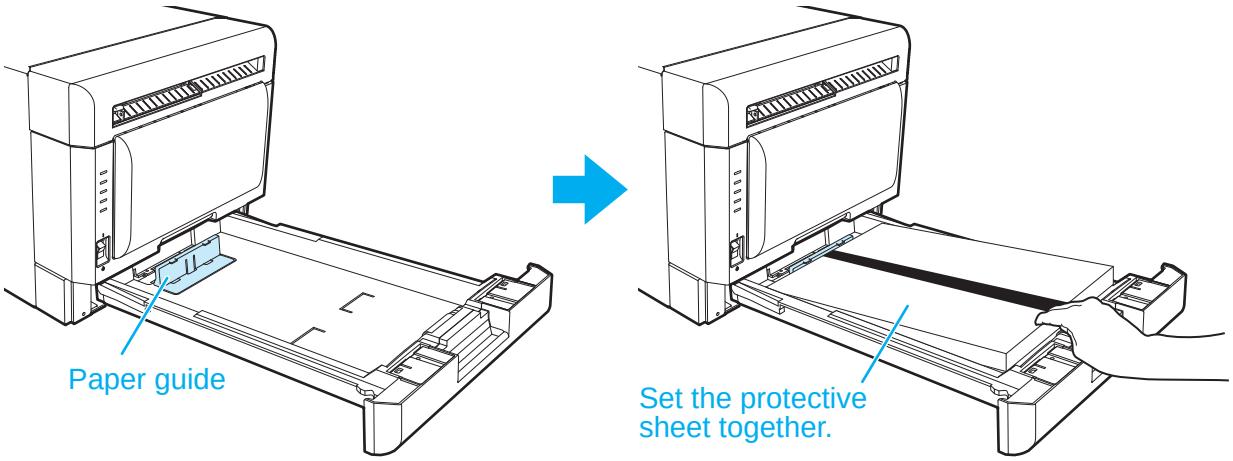

You can switch the paper length of the paper tray.
Move the paper guide as shown below to switch between 8 x 10 inch and 8 x 12 inch.
Please switch and use according to the size of the sheet paper.
See page 19 for details.

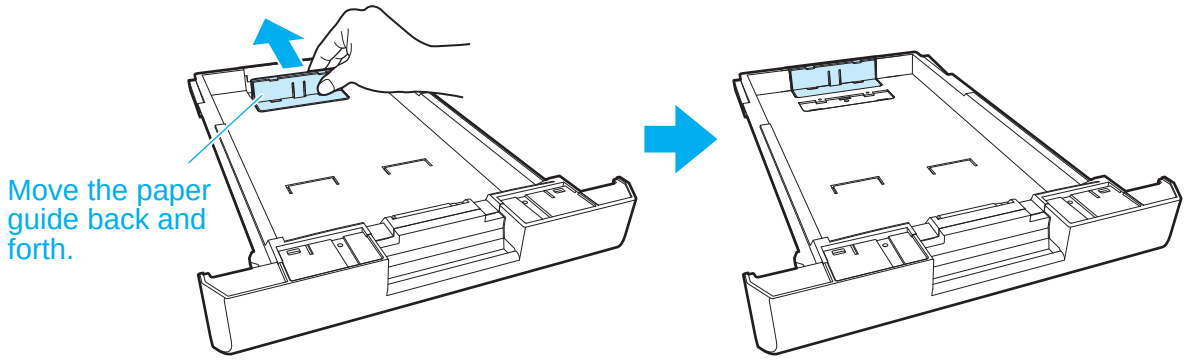

15 **Close the paper tray.**

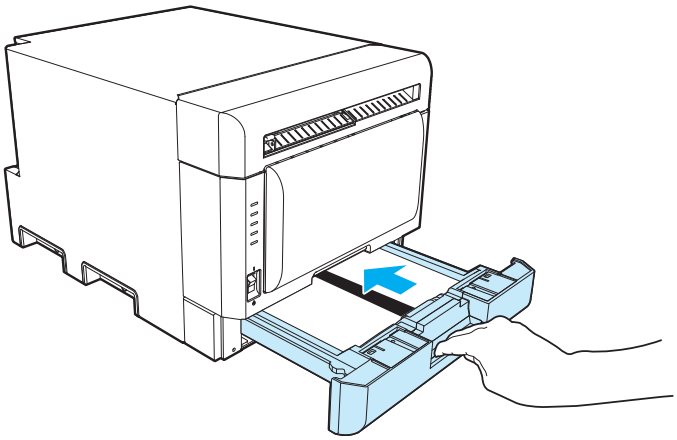

Caution

- Make sure that the scrap box is installed when printing. If not installed, your fingers may get caught in the moving parts and be injured.

Switching the position of the paper guide

Switch the size of the paper tray according to the size of the sheet paper used.

1 **Remove the paper tray.**
If you raise the front side while pulling it towards you until you cannot pull it out, it will come off.

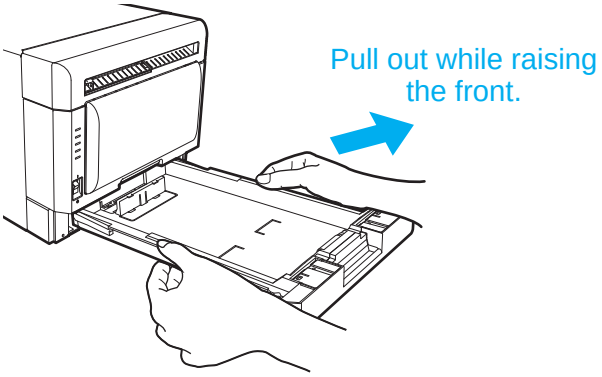

2 **Turn the paper tray over.**

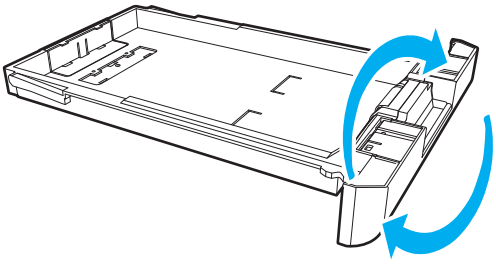

3 **Remove the paper guide from the tray.**
Remove the two screws and press the hook on the paper guide to release the paper guide.

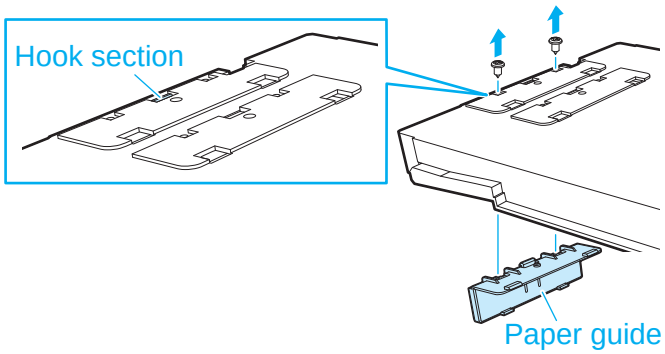

4 **Insert the paper guide into the position that matches the paper size, and then secure the two screws.**

< 8 x 10 >

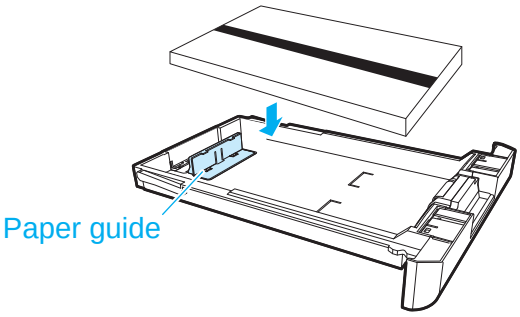

< 8 x 12 >

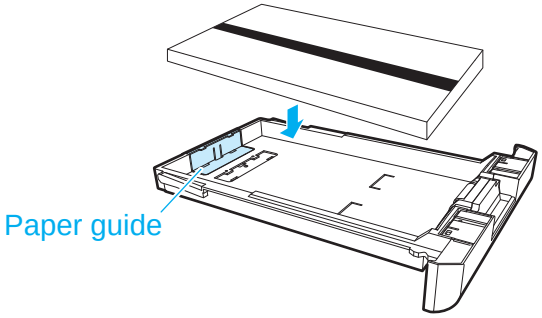

⚠ Caution

- When switching the position of the paper guide, do not remove any screws other than the securing screws on the paper guide.

Disposing of paper scrap

Paper scraps generated when the paper is cut are collected in the scrap box. Be sure to empty the scrap box when replacing the paper.

1 **Release the opening lever, and pull out the mechanism unit.**

2 **Lift the paper lever and raise the front cover.**

3 **Hold the center of the scrap box, lift it straight up to remove it, and discard the paper scraps.**

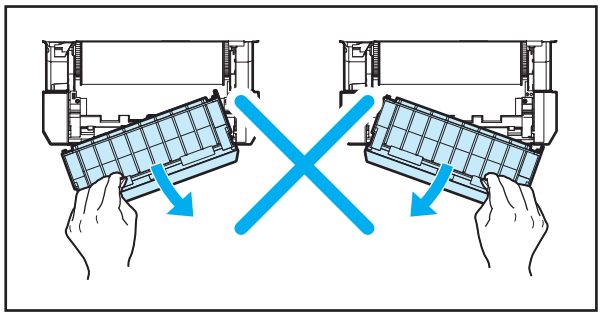

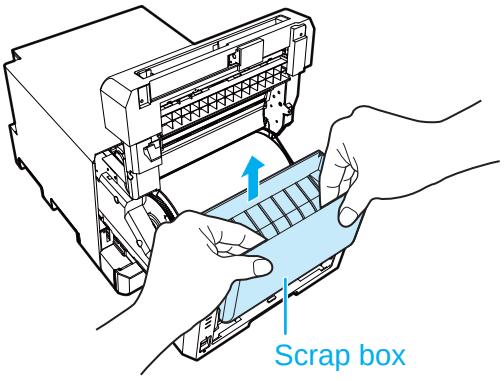

4 **Set the scrap box and close the front cover.**

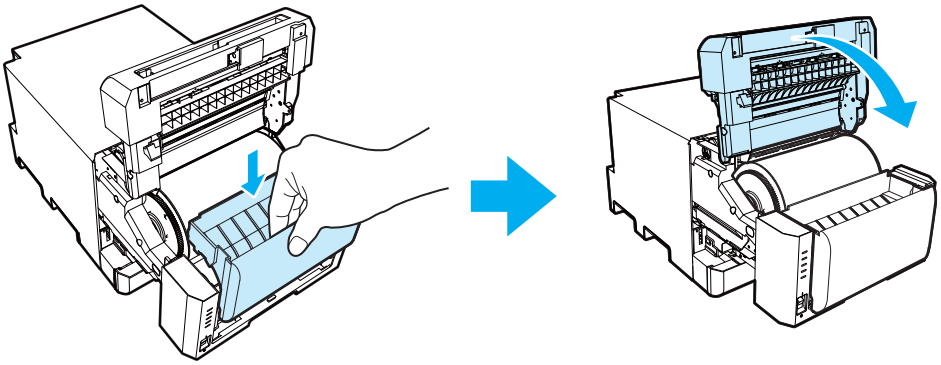

5 **Close the mechanism unit.**

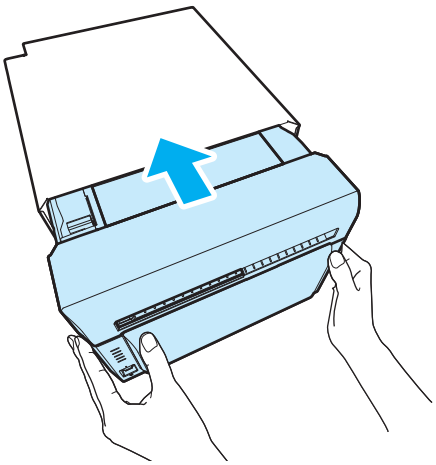

⚠ Caution

- Lift the trash can straight up with both hands. Be sure not to remove it at an angle. The scrap box may be damaged and the product may not operate normally.
- When the scrap box has been removed, do not touch the cutter on the upper part or you may be cut.
- Troubles may occur if the printer is used when the scrap box is full.

Slit cutter/Creaser

Slit cutter

This cuts paper vertically when paper is ejected.

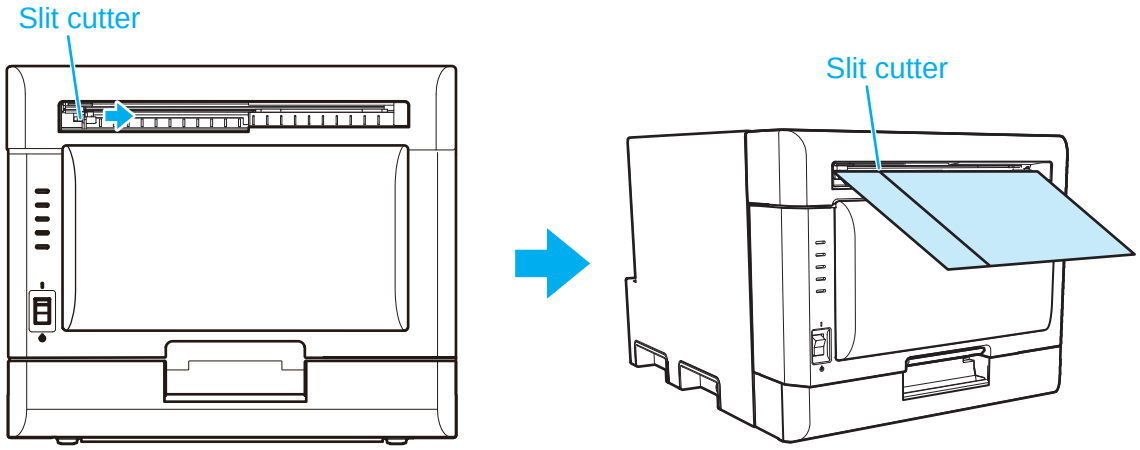

Caution

- Do not insert your hand into the paper ejection port when the slit cutter is operating. Doing so may result in fingers being caught in the cutter and injury.

Creaser

This enables application of a crease line in the paper.

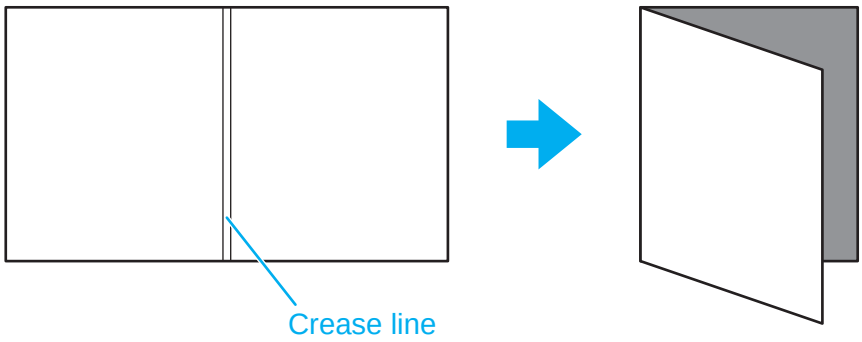

Troubleshooting

Error display

The LEDs condition (lit, flashing, off) indicates the product status.

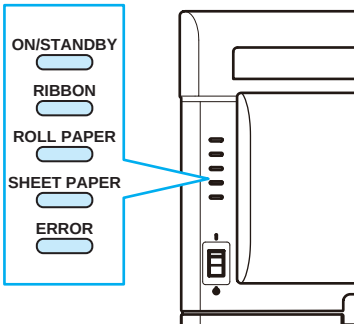

lit, flashing, off.

LED display	Status	Condition	Refer to
ON/STANDBY RIBBON ROLL PAPER SHEET PAPER ERROR	Paper end	Set a new paper.	P.13
ON/STANDBY RIBBON ROLL PAPER SHEET PAPER ERROR	Paper end (Roll paper)	Set a new roll paper.	P.13
ON/STANDBY RIBBON ROLL PAPER SHEET PAPER ERROR	Paper end (Sheet paper)	Set a new sheet paper.	P.17
ON/STANDBY RIBBON ROLL PAPER SHEET PAPER ERROR	Ribbon end	Set a new ribbon.	P.13
ON/STANDBY RIBBON ROLL PAPER SHEET PAPER ERROR	Door is open	Close the mechanism unit.	P.17
ON/STANDBY RIBBON ROLL PAPER SHEET PAPER ERROR	Door is open (No roll paper)	Properly set the paper then close the mechanism unit.	P.13

LED display	Status	Condition	Refer to
ON/STANDBY RIBBON ROLL PAPER SHEET PAPER ERROR	Tray is open	Close the paper tray.	P.18
ON/STANDBY RIBBON ROLL PAPER SHEETPAPER ERROR	Scrap box missing	Set the scrap box in the printer.	P.16
ON/STANDBY RIBBON ROLL PAPER SHEET PAPER ERROR	Paper error (Roll paper)	Properly reset the roll paper.	P.13
ON/STANDBY RIBBON ROLL PAPER SHEET PAPER ERROR	Paper error (Sheet paper)	Properly reset the sheet paper.	P.17
ON/STANDBY RIBBON ROLL PAPER SHEET PAPER ERROR	Ribbon error	Set the ribbon properly.	P.13
ON/STANDBY RIBBON ROLL PAPER SHEET PAPER ERROR * RIBBON LED and PAPER LED alternately flash	Media size error	Send data with a size that matches the media size that has been set on the printer.	P.12
ON/STANDBY RIBBON ROLL PAPER SHEET PAPER ERROR	System error	Reset the ON/Standby switch. If the system does not recover, contact your dealer.	-
ON/STANDBY RIBBON ROLL PAPER SHEET PAPER ERROR	Head cool down	The print heads are being cooled. This error is cleared automatically.	-

Solving errors

1 **Release the opening lever, and pull out the mechanism unit.**

2 **Remove the ribbon cassette from the printer unit.**

3 **Perform the action corresponding to the error.**

“The ribbon is caught in the printer” (see this page),
“The printer is jammed with roll paper” (see P.25),
“The printer is jammed with sheet paper” (see P.27),
“The printer stopped with the paper partially cut” (see P.29),
“The printer stopped with the paper partially creased” (see P.29),
“The slit cutter stopped halfway” (see P.30),
“The power has been cut during printing” (see P.31)

The ribbon is caught in the printer

1 **Pull out the ribbon.**

2 **Cut the ribbon.**

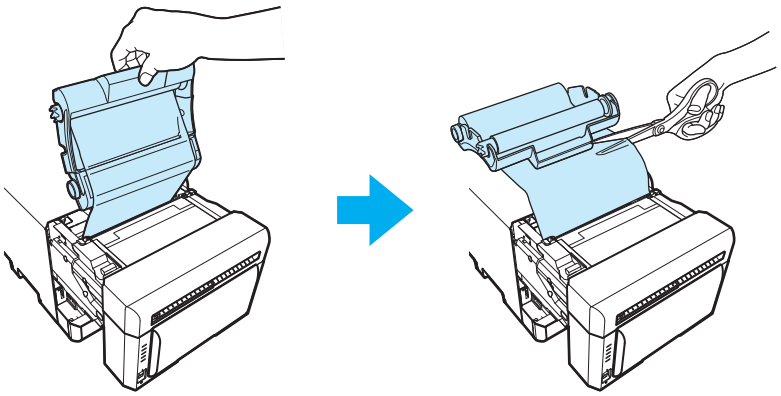

3 **Remove the ribbon that remains in the printer unit carefully.**

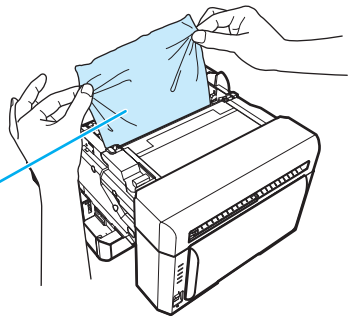

Any pieces of ribbon left inside the printer may affect the print quality. In such cases, clean the platen roller.
(see “Platen roller” P.32)

4 **Reattach the ribbon with tape or similar material.**

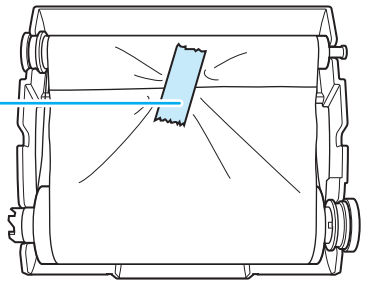

5 **Rotate the take-up roller until the part attached with tape cannot be seen anymore.**

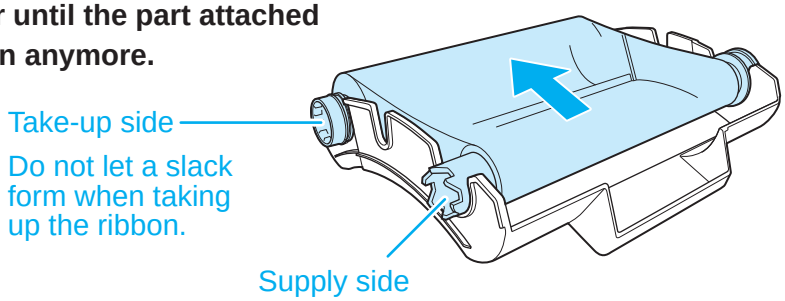

6 **Insert the ribbon cassette in the printer unit.**

7 **After switching the ON/Standby switch on the printer unit to ON, set the paper again.**
When the mechanism unit is closed, initialization of the paper will be performed (any matter printed in case of error will be ejected).Until initialization is performed, errors cannot be removed.

The printer is jammed with roll paper

⚠ Caution

- Take care to not cut, scratch, or hurt your hands the edges of the paper or on any sharp edges within the printer. Use safety lint-free gloves or other proper protective clothing.

1 **Remove the jam.**
Rewind the paper onto the paper spool by turning the spool in the opposite direction of the paper path (see Fig.A) then carefully remove the paper from the printer by pulling paper forward, away from the printer (see Fig.B). Apply only light pressure to avoid damaging the printer components.

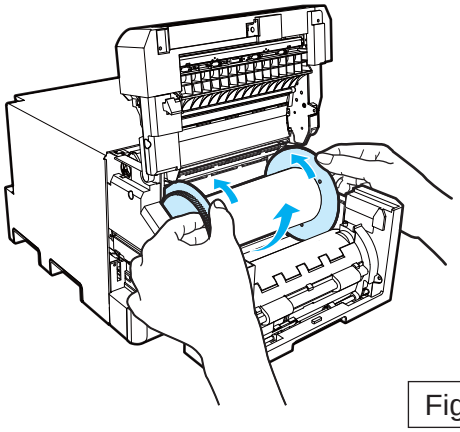

Fig.A

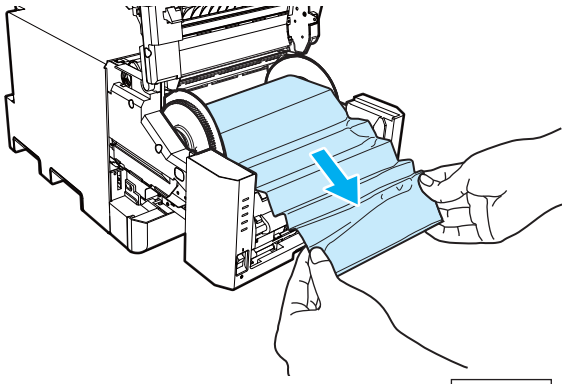

Fig.B

2 **If the jam is not easily removed by above method,** cut the damaged portion of the paper edge, remove and set the paper roll to the side. (Fig.C)
Then remove any remaining paper from the feed path.
If a portion of the paper remains in the printer, carefully reach into the printer unit and remove the paper from the paper path by pulling the paper forward (the direction indicated in Fig.D).

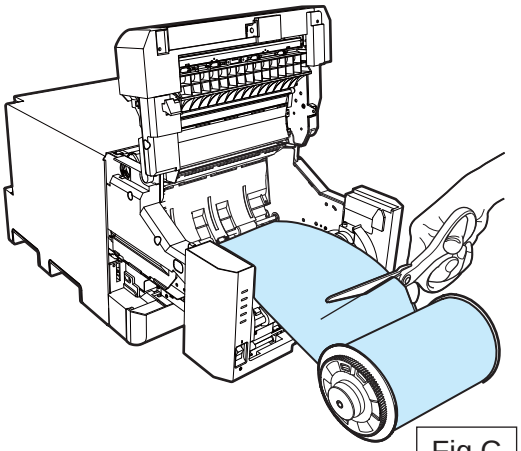

Fig.C

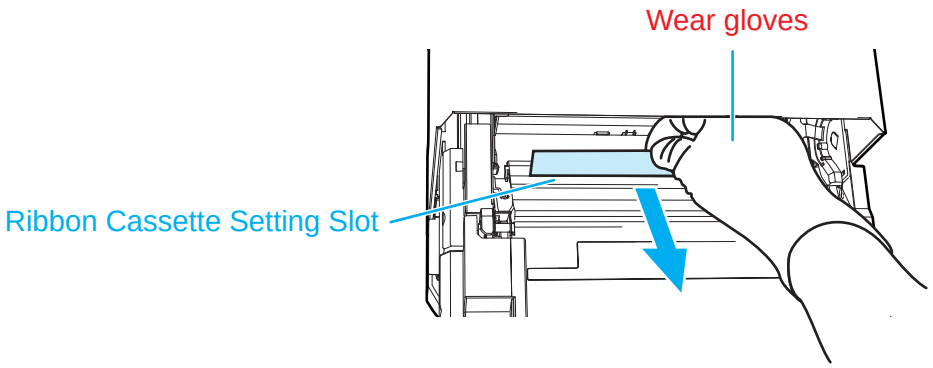

Fig.D

⚠ Caution

- Use caution when reaching into the printer unit. If the jammed paper cannot be removed without using strong force, contact technical support for further instructions. Use of excessive force can damage the printer.
- Take care to not cut, scratch, or hurt your hands the edges of the paper or on any sharp edges within the printer. Use safety lint-free gloves or other proper protective clothing.
- Do not push or pull any parts inside the printer other than the paper. Doing so may cause problems.

3 **Cut off the problem section, such as a wrinkled or partially printed area, with a pair of scissors.**
If wrinkled or partially printed areas remain, they may jam the printer again. Furthermore, if the paper is not cut evenly, the printer does not operate correctly.

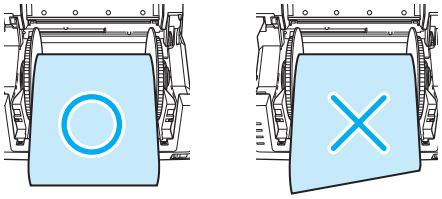

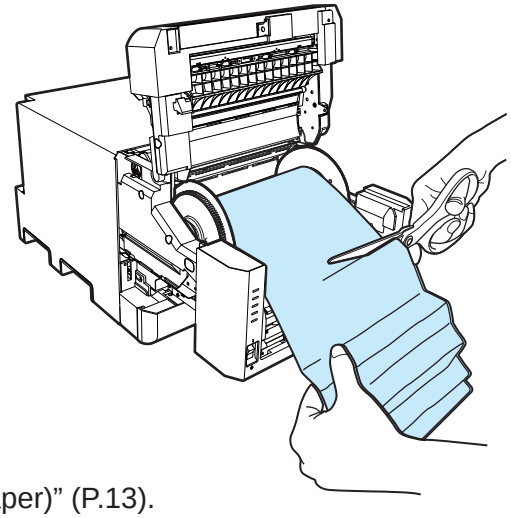

Next, refer to “Setting the media (ribbon, roll paper, sheet paper)” (P.13).

The printer is jammed with sheet paper

1 Check if there is paper in the front paper guide.

Lift the paper lever and raise the front cover, and remove the trash can.

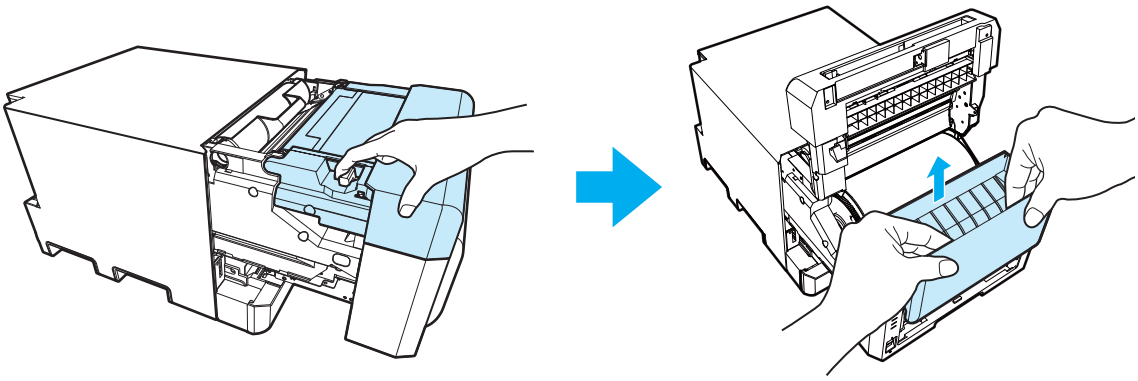

Release the hooks on both ends of the front paper guide.

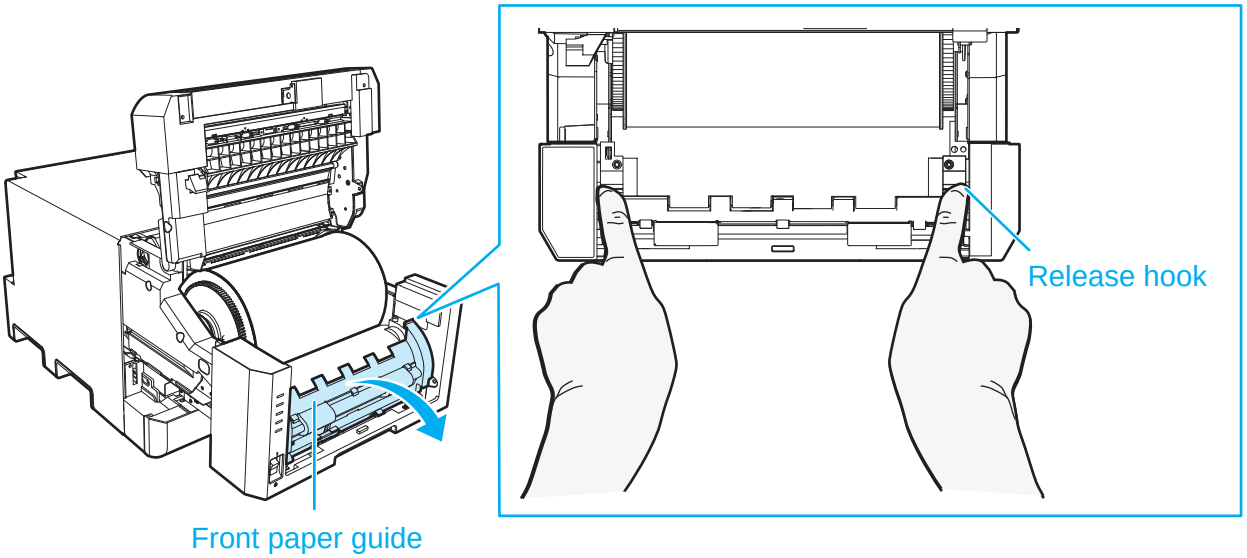

Open the front paper guide, and if there is paper, pull out the leading edge of the paper.

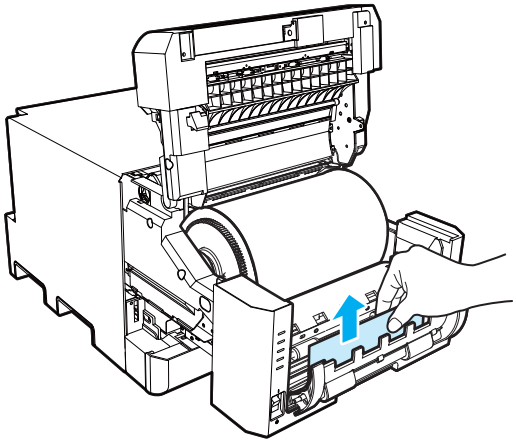

2 **If there is no paper in the front paper guide, pull out the paper tray and check for paper.**

If the leading edge of the paper has come out, pull it out toward you to remove.

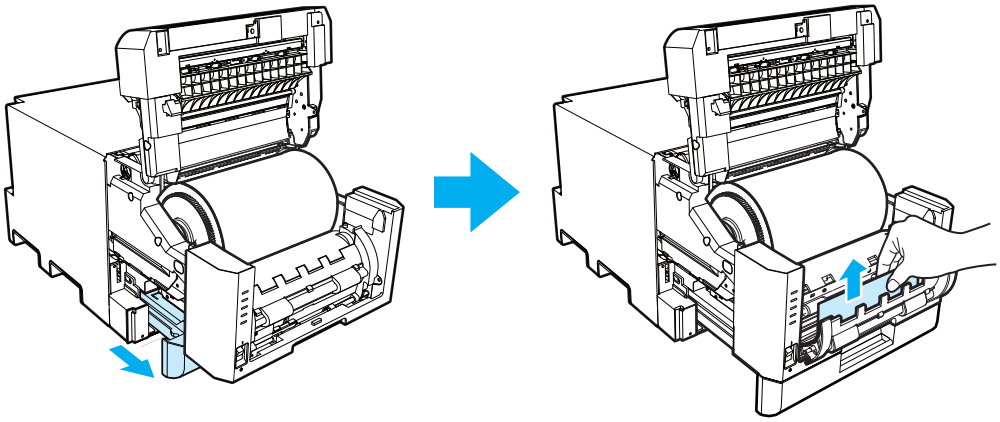

3 **If there is no paper in the front paper guide, check if there is paper at the bottom of the mechanism unit.**

Close the paper tray slightly, and if there is paper at the bottom of the mechanism unit, pull out the leading edge of the paper.

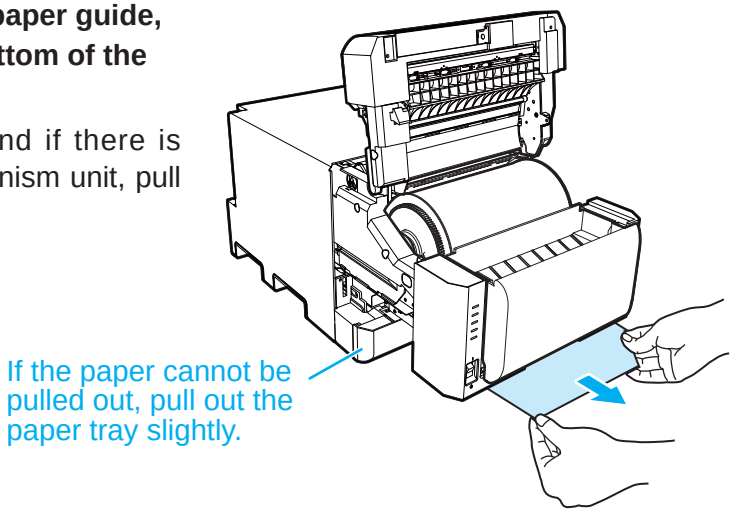

4 **If there is no paper in the front paper guide or at the bottom of the mechanism unit, check if there is paper in the ribbon cassette setting slot.**

Close the front cover, and if there is paper in the ribbon cassette setting slot, reach in, grasp the leading edge of the paper, and pull it out toward you.

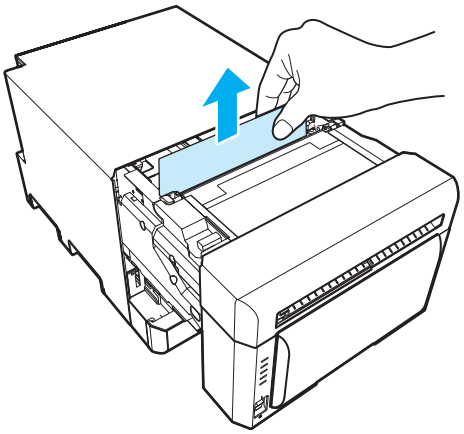

⚠ Caution

- Use caution when reaching into the printer through the ribbon cassette setting slot. Use safety lint-free gloves or other proper protective clothing.
- If the jammed paper cannot be removed without using strong force, contact technical support for further instructions. Use of excessive force can damage the printer.

The printer stopped with the paper partially cut

1 **Set the ON/Standby switch to Standby and then ON again.**

The paper jam is released and the cutter blade returns to its standby position.

- If you cannot release the paper, contact a service representative.

2 **Remove the partially printed part of paper from the printer.**

Next, refer to “The printer is jammed with roll paper” (see P.25) and “The printer is jammed with sheet paper” (see P.27).

The printer stopped with the paper partially creased

1 **Set the ON/Standby switch to Standby and then ON again.**

The paper jam is released and the creaser returns to its standby position.

2 **Remove the partially printed part of paper from the printer.**

Next, refer to “The printer is jammed with roll paper” (see P.25) and “The printer is jammed with sheet paper” (see P.27).

⚠ Caution

- Use caution when reaching into the printer through the ribbon cassette setting slot. Use safety lint-free gloves or other proper protective clothing.
- If the jammed paper cannot be removed without using strong force, contact technical support for further instructions. Use of excessive force can damage the printer.

The slit cutter stopped halfway

1 **Set the ON/Standby switch to Standby.**

2 **Remove the paper remaining in the printer.**

If the leading edge of the paper has not come out from the paper ejection port, open the mechanism unit, pull out the paper toward the rear from the ribbon cassette setting slot, and then pull it out toward you to remove.

Printer cross section

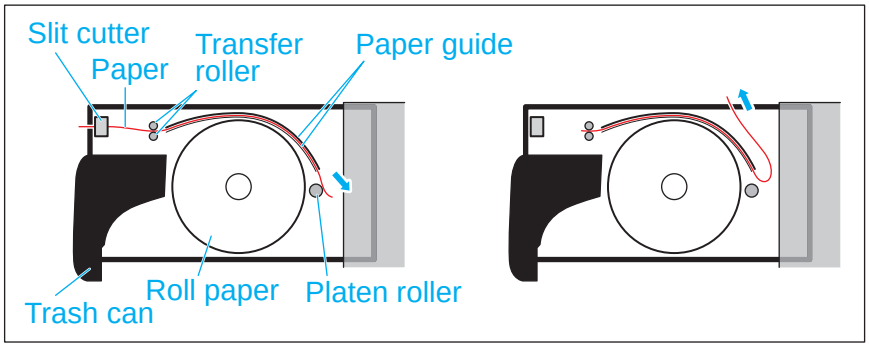

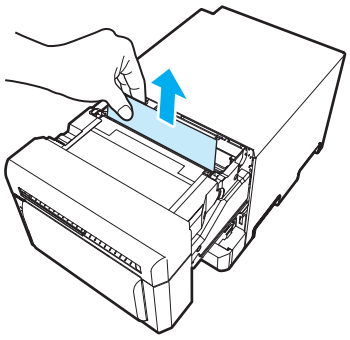

If the leading edge of the paper has come out from the paper ejection port, pull the paper out toward you to remove.

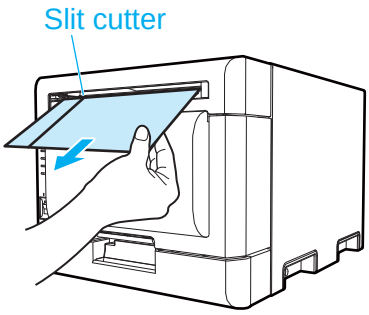

⚠ Caution

- Use caution when reaching into the printer through the ribbon cassette setting slot. Use safety lint-free gloves or other proper protective clothing.
- If the jammed paper cannot be removed without using strong force, contact technical support for further instructions. Use of excessive force can damage the printer.

The power has been cut during printing

If the power is cut during printing, you will not be able to pull out the mechanism unit.

1 **Set the ON/Standby switch to Standby and then ON again.**
The partially printed paper is cut into scrap-size pieces and removed.
After this, you can pull out the mechanism unit.

2 **Check that no partially printed paper remains in the printer.**

If partially printed paper remains, refer to “The printer is jammed with roll paper” (see P.25) and “The printer is jammed with sheet paper” (see P.27).

Caution

- Do not set the ON/Standby switch to Standby during printing. This may cause a malfunction.

Cleaning

Platen roller

If several indentations appear on the printouts (in intervals of approximately 50 mm) or if the printouts are dirty, clean the platen roller.
There may be dust, dirt, adhesive, etc. from the ribbon or paper on the platen roller.

1 **Prepare a piece of gauze or other soft cloth moistened with ethyl alcohol.**

2 **Perform steps 1 to 4 in "Setting the media (ribbon, roll paper, sheet paper)".**

3 **Wipe off all the dirt while turning the platen roller.**

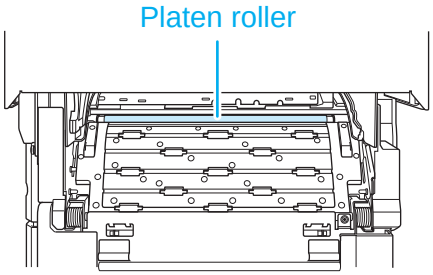

Caution

- Do not touch parts other than cleaning target when cleaning.
- Take care to not cut, scratch, or hurt your hands on any sharp edges within the printer. Use safety lint-free gloves or other proper protective clothing.

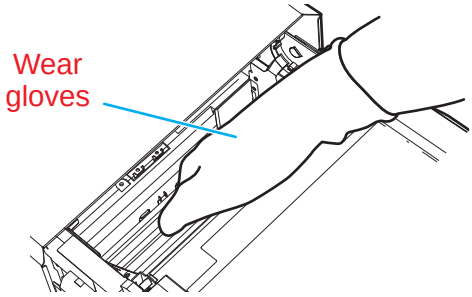

Thermal print head

If stains adhere to the thermal print head, unevenness or gaps may appear during printing.

1 **Prepare a piece of gauze or other soft cloth moistened with ethyl alcohol.**

2 **Gently wipe the thermal head without touching it directly with your hands.**
Wipe only cleaning target after visual observation of it.

3 **If the problem persists, wipe with a polishing sheet.**
Recommended polishing sheet :
Mipox polishing sheet GC10000-75 FEY-A

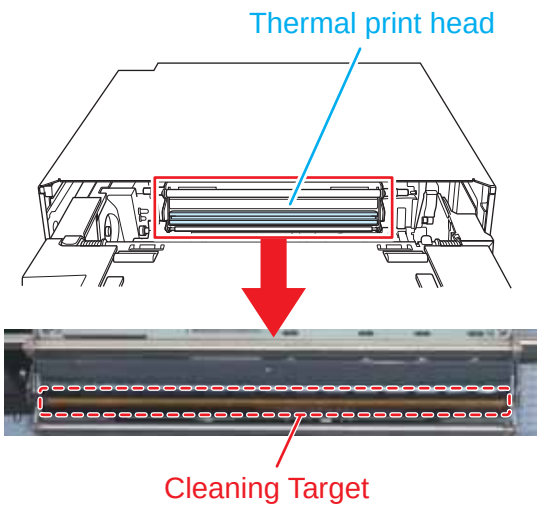

⚠ Caution

- Do not touch parts other than cleaning target when cleaning.
- Take care to not cut, scratch, or hurt your hands on any sharp edges within the printer. Use safety lint-free gloves or other proper protective clothing.

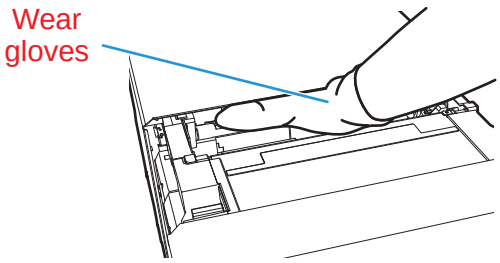

⚠ Caution

- Do not use benzene or thinners, which may damage plastic materials.
- The thermal head is hot for a while after printing. To avoid burning yourself, wait some time before cleaning.
- For your safety, always unplug an electronic devices before cleaning.

Repacking

Transporting the printer requires the reuse of the original packing materials. The printer must be packed in the same way it was at the time of purchase. If the original packaging materials are not used and the printer is not packed correctly, the printer may be broken during transport.
Remove all accessories from the printer (media, power cable).
Please save the Print Head Protective Pad and do not throw away any packaging as you will need them to safely transport the printer.

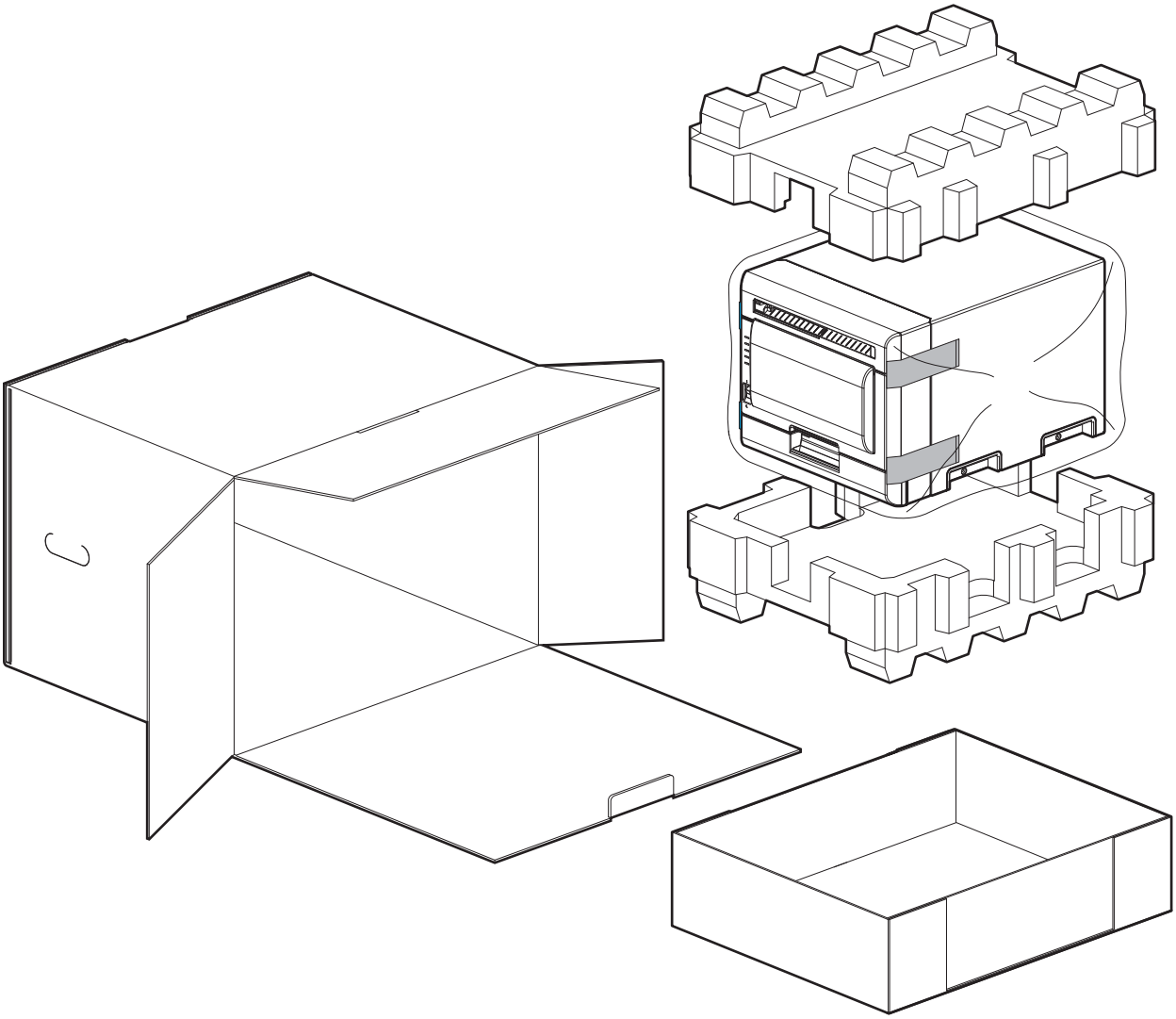

Specifications

Model / Type			DP-DS820DX		
Print method			Thermal dye sublimation transfer		
Resolution	Width direction		300dpi		
	Paper feed direction	Normal mode	300dpi		
		High-quality mode	600dpi		
Print size			Roll paper	8×10	203 mm × 254 mm
				8×12	203 mm × 305 mm
			Sheet paper	8×10	203 mm × 254 mm
				Calendar (8×10.5)	203 mm × 266.7 mm
				Photo book (8×10.75)	203 mm × 273 mm
				8×12	203 mm × 305 mm
Ink ribbon/paper set capacity			Ribbon	(8×10")	180 sides
				(8×12")	150 sides
			Roll paper	(8×10")	130 sides
				(8×12")	110 sides
			Sheet paper	(8×10")	90 sheets (180 sides)
				(8×12")	90 sheets (180 sides)
Slit cutter			Paper may be cut vertically (cutting from 7.5 to 4 inches in 0.1-inch increments is possible)		
Creaser			Enables application of a crease line in the paper		
Interface			USB2.0 (max 480 Mbps) TYPE B connector		
Dimensions			322 mm x 459.8 mm x 271.8 mm		
Weight			Approx. 22.0 kg (printer only)		
Rated Voltage			AC100 V - 240 V 50 Hz/60 Hz		
Rated Current			100 V 3.9 A 240 V 1.6 A		
Operating environment			Temperature 5 °C to 35 °C in natural convection conditions		
			Humidity 35 % to 80 % with no condensation		

* The specifications and appearance of the printer may be changed without prior notice.

Customer service

For information about the product operation or repair, contact your dealer or a service center.

Dai Nippon Printing Co., Ltd.