TAOGLAS

Datasheet

Part No:
WLA.10

Description:

Dual-Band 2.4GHz/5.8GHz Wi-Fi Ceramic Substrate Loop Antenna

Features:

Dimensions: 3.2mm *1.6mm * 0.5mm

High Efficiency

Dual-band Wi-Fi 2.4/5.8GHz

Low profile

Compact Size

Surface-Mount

RoHS and REACH compliant

1.	Introduction	3
2.	Specifications	5
3.	Antenna Characteristics	6
4.	Radiation Patterns	8
5.	Mechanical Drawing	11
6.	Antenna Integration Guide	12
7.	Solder Reflow Diagram	20
8.	Packaging	21
	Changelog	

Taoglas makes no warranties based on the accuracy or completeness of the contents of this document and reserves the right to make changes to specifications and product descriptions at any time without notice. Taoglas reserves all rights to this document and the information contained herein. Reproduction, use or disclosure to third parties without express permission is strictly prohibited.

Ireland ISO 9001: 2015 Certified

Taiwan ISO 9001: 2015 Certified

1. Introduction

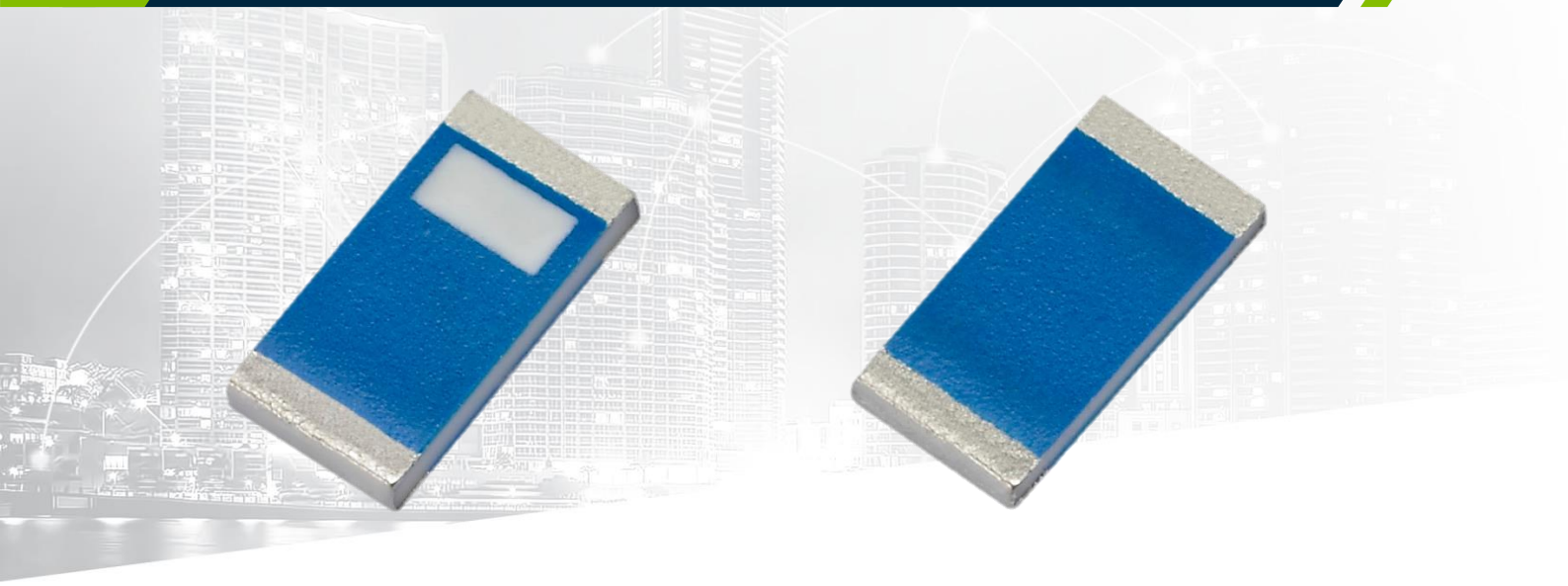

The WLA.10 2.4 / 5.8 GHz Loop antenna is a high efficiency, miniature SMD, edge mounted ceramic antenna for Dual-band 2.4 / 5.8 GHz Wi-Fi and 802.11 applications where PCB space is limited, such as hand-held devices. The WLA.10 uses the main PCB as its ground plane, thereby maintaining good efficiency despite its small size. The efficiency is very stable on the complete bandwidth of both lower and upper bands allowing for maximum data throughput rates on all channels available.

The WLA.10 can be tuned for different PCB sizes/environments by simply changing the values of the matching circuit. Multiple WLA.10 antennas can be integrated easily on a board to achieve excellent MIMO throughput. At 3.2mm*1.6mm*0.5mm, the WLA.10 is one of the smallest antennas available worldwide. This antenna is delivered on tape and reel.

Typical application
- Dual-band Wi-Fi Communications
- Handheld Devices
- IEEE 802.11 b/g/n/ac
- Tablet PCs
- Specialized Control Systems
- Wireless Remote Controls

The results below are based on a 80mm x 40mm ground-plane. If your ground-plane is smaller the efficiency will decrease.

Many module manufacturers specify peak gain limits for any antennas that are to be connected to that module. Those peak gain limits are based on free-space conditions. In practice, the peak gain of an antenna tested in free-space can degrade by at least 1 or 2 dBi when put inside a device. So ideally you should go for a slightly higher peak gain antenna than mentioned on the module specification to compensate for this effect, giving you better performance.

Upon testing of any of our antennas with your device and a selection of appropriate layout, integration technique, or cable, Taoglas can make sure any of our antennas' peak gain will be below the peak gain limits. Taoglas can then issue a specification and/or report for the selected antenna in your device that will clearly show it complying with the peak gain limits, so you can be assured you are meeting regulatory requirements for that module.

For example, a module manufacturer may state that the antenna must have less than 2 dBi peak gain, but you don't need to select an embedded antenna that has a peak gain of less than 2 dBi in free-space. This will give you a less optimized solution. It is better to go for a slightly higher free-space peak gain of 3 dBi or more if available. Once that antenna gets integrated into your device, performance will degrade below this 2 dBi peak gain due to the effects of GND plane, surrounding components, and device housing. If you want to be absolutely sure, contact Taoglas and we will test.

Choosing a Taoglas antenna with a higher peak gain than what is specified by the module manufacturer and enlisting our help will ensure you are getting the best performance possible without exceeding the peak gain limits.

This antenna can be mounted with no performance degradation in either orientation as long as the antenna is soldered correctly via Surface mounting. Please see the integration instructions section for further detail regarding the optimum way to integrate this antenna into your device. For further information please contact your regional Taoglas customer support team.

2. Specifications

Electrical		
Frequency (MHz)	2400-2500	5150-5850
Bandwidth (MHz)	100 (RL<-10)	1332 (RL<-6)
Peak Gain (dBi)	1.25	2.17
Efficiency (%)	66.40	59.68
Impedance (Ω)	50	50
Polarization	Linear	Linear
Maximum Input Power	2W	
Mechanical		
Dimensions (mm)	3.2 x 1.6 x 0.5	
Ground plane (mm)	80 x 40 (Standard Evaluation Board)	
Weight (g)	0.02	
Environmental		
Temperature Range	-40°C to 105°C	
Humidity	Non-condensing 65°C 95% RH	
Moisture Sensitivity Level (MSL)	3 (168 Hours)	

*Tested on 80mm*40mm evaluation board.

3. Antenna Characteristics

3.1 Return Loss

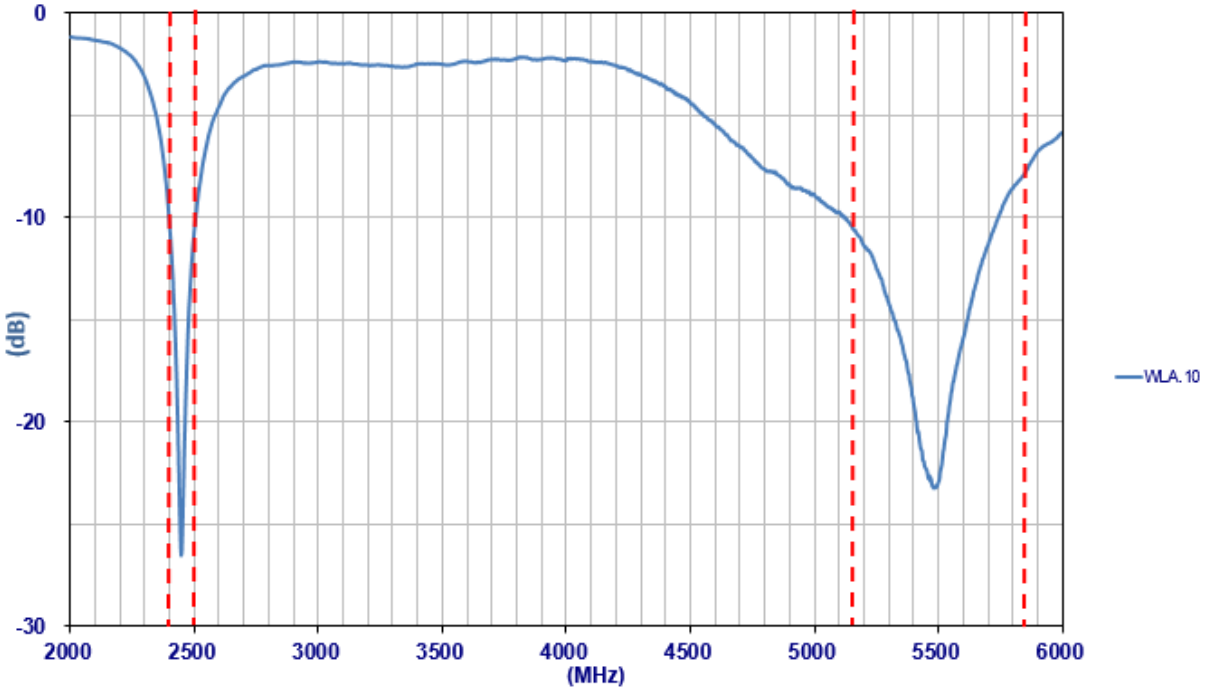

3.2 Efficiency

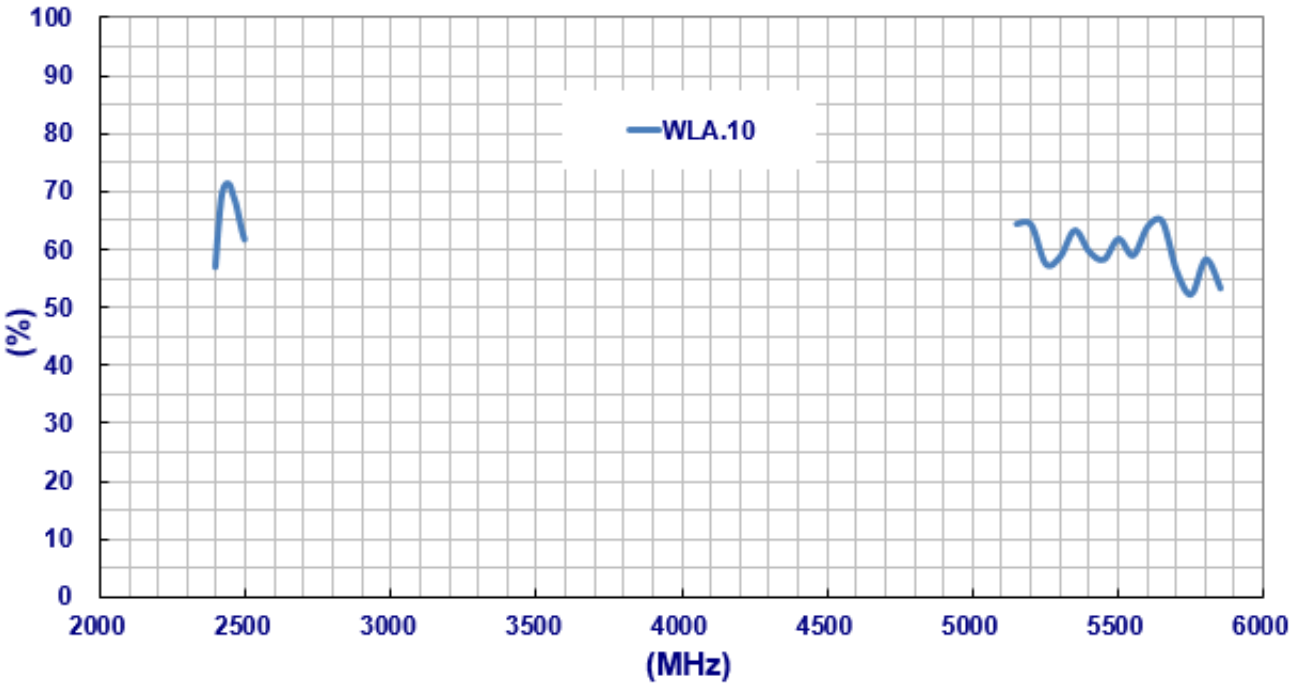

3.3 Average Gain

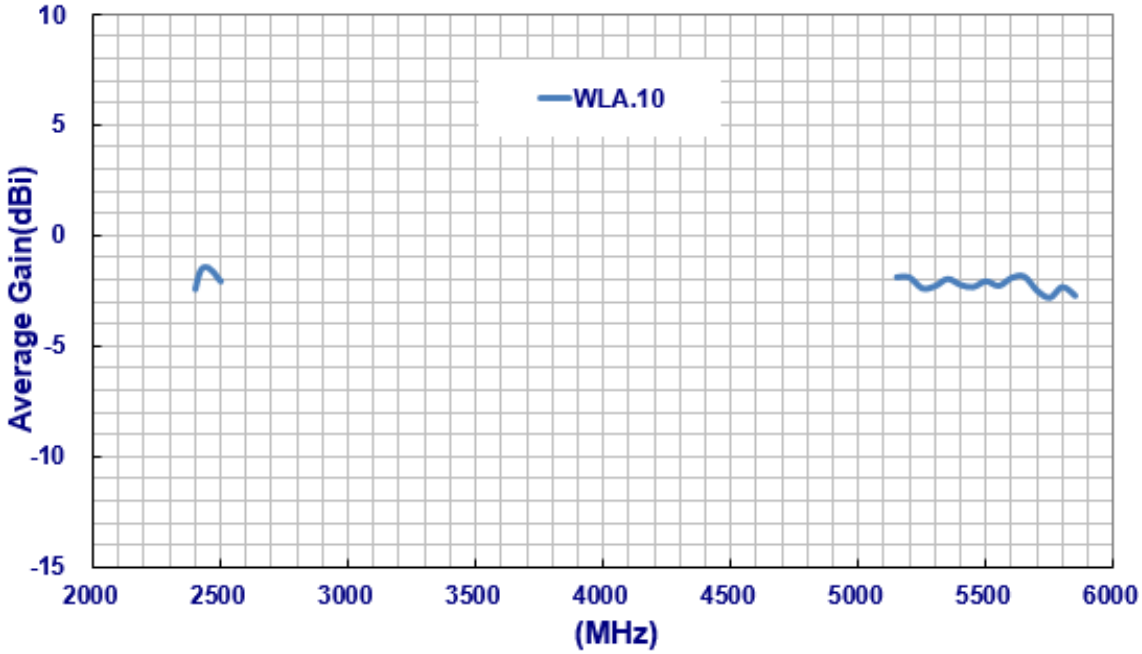

3.4 Peak Gain

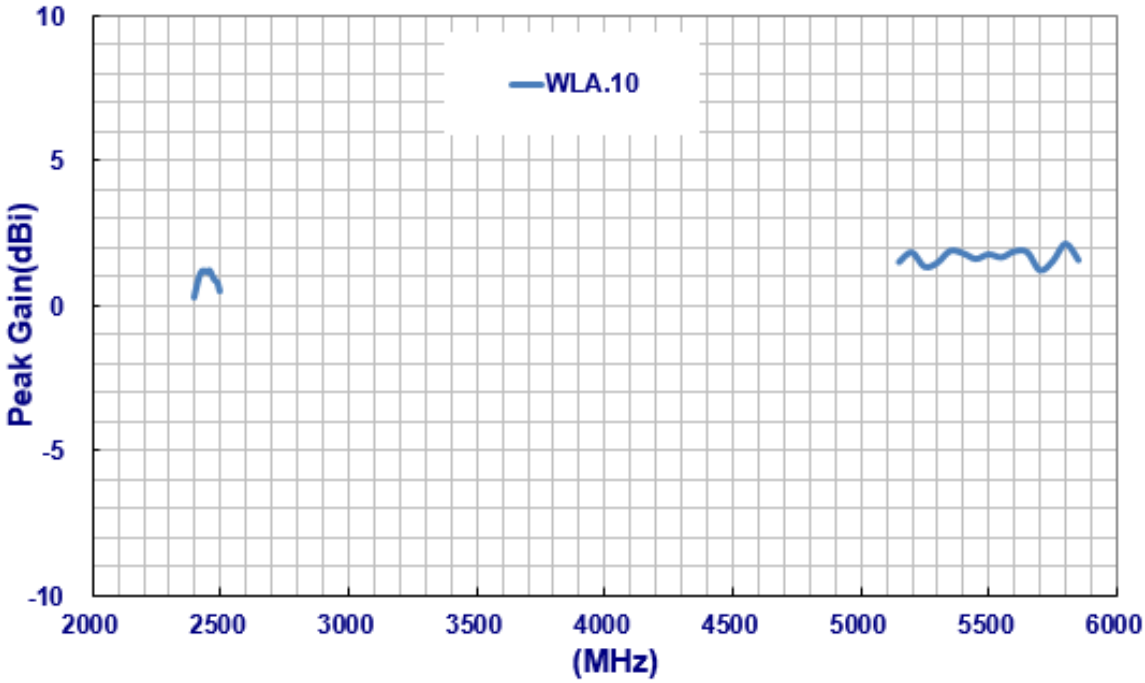

4. Radiation Patterns

4.1 Test Setup

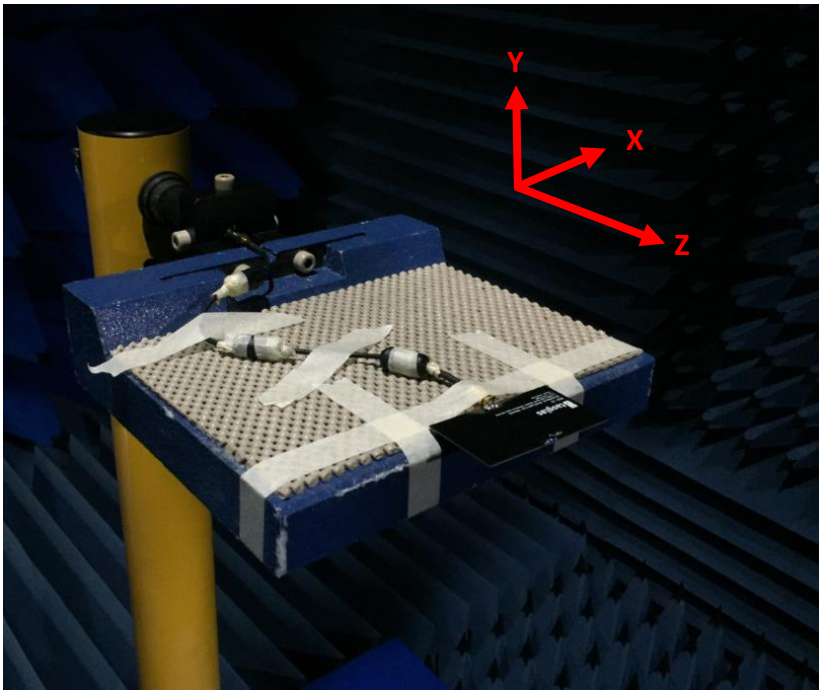

4.2 3D and 2D Radiation Patterns

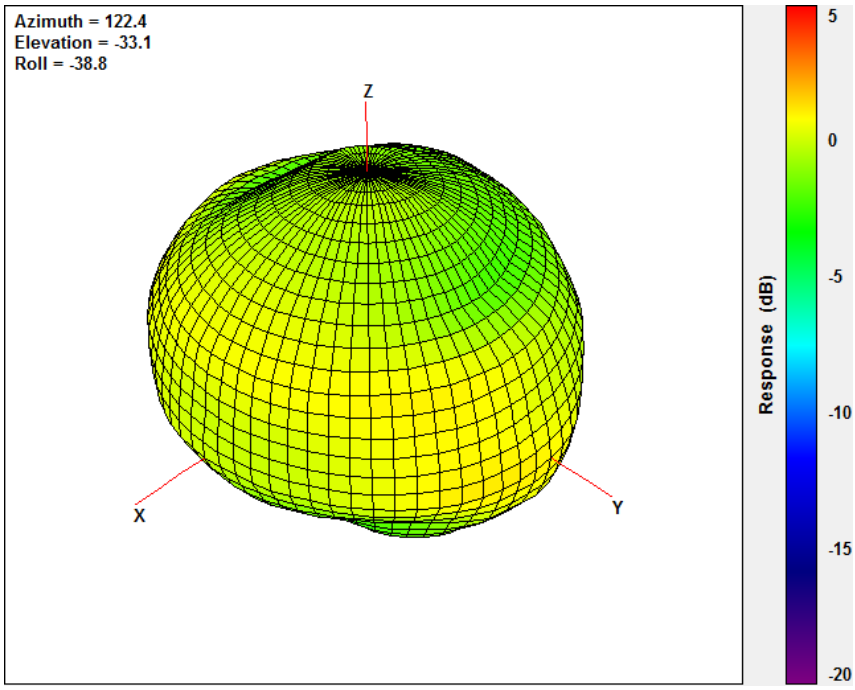

XY Plane	XZ Plane	YZ Plane

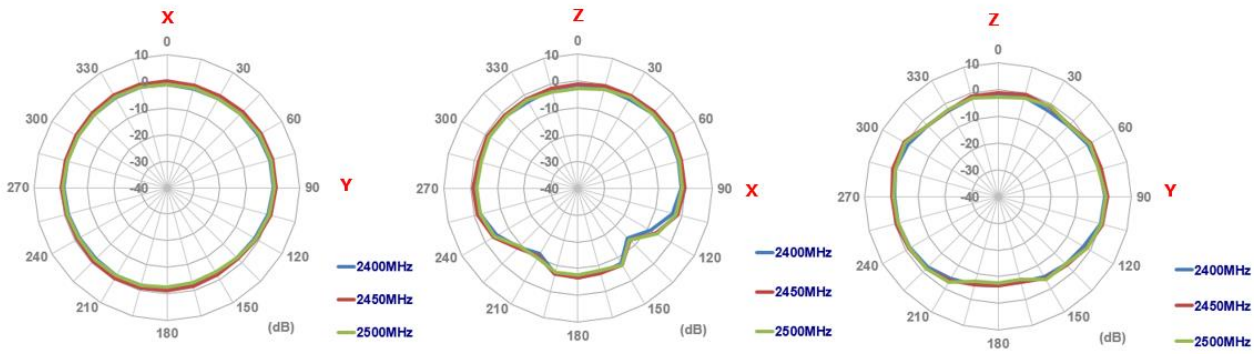

5550MHz

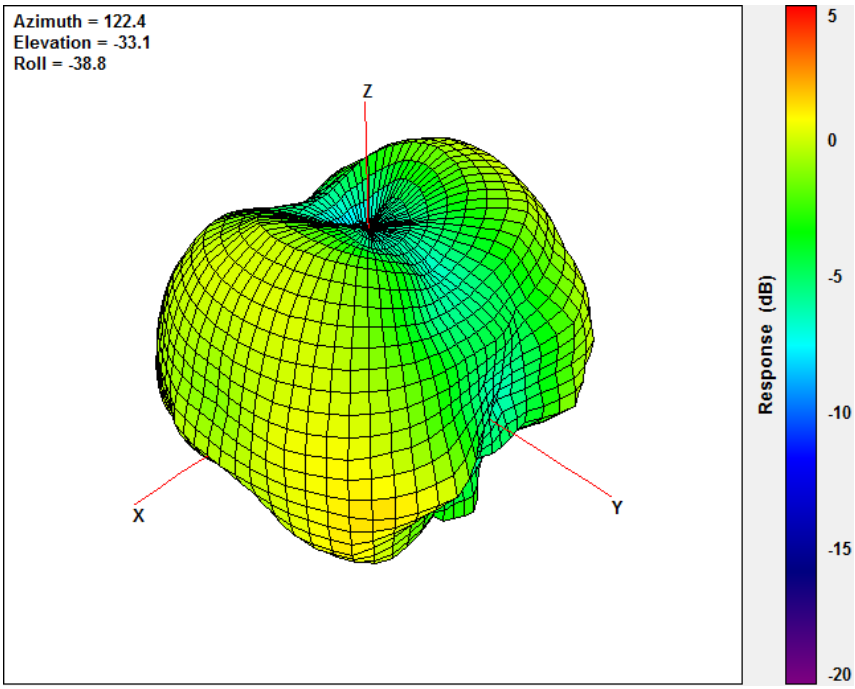

XY Plane	XZ Plane	YZ Plane

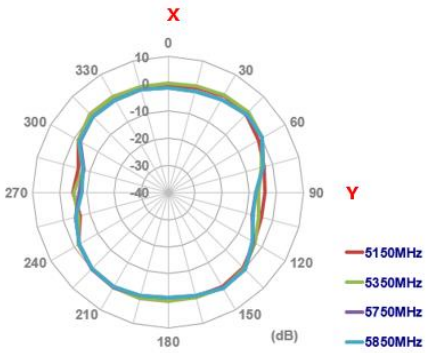

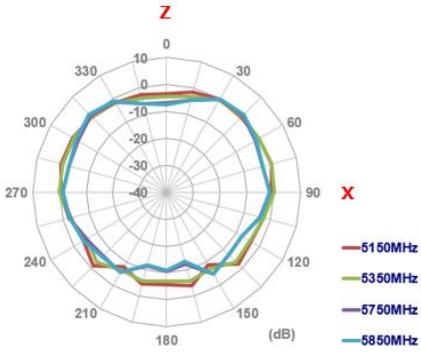

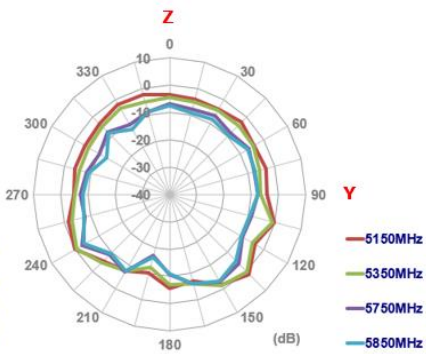

5. Mechanical Drawing (Units: mm)

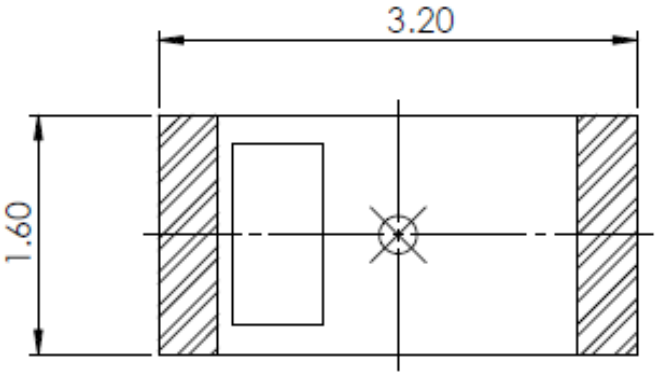

TOP VIEW

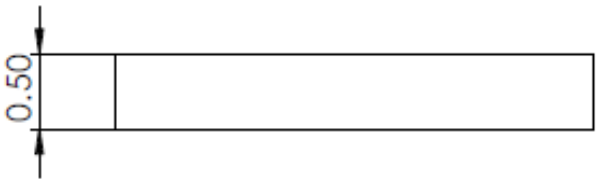

FRONT VIEW

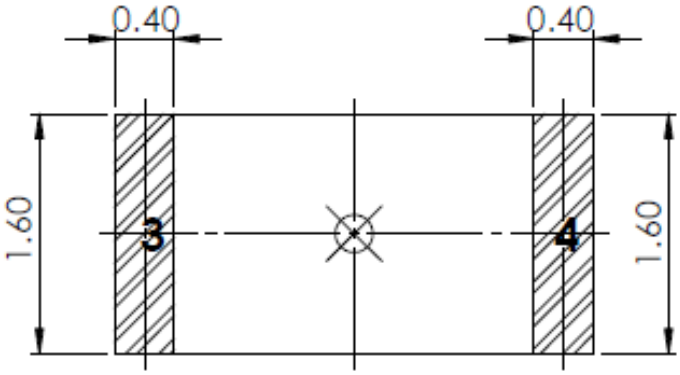

BOTTOM VIEW

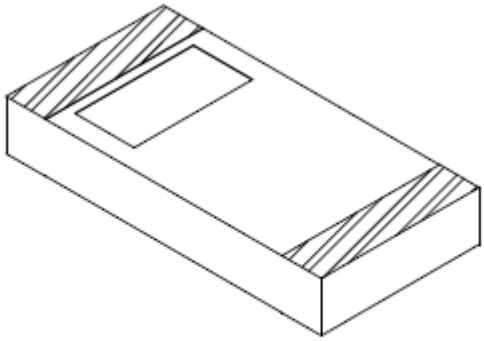

ISOMETRIC VIEW

AG PLATED AREA

6. Antenna Intergration Guide

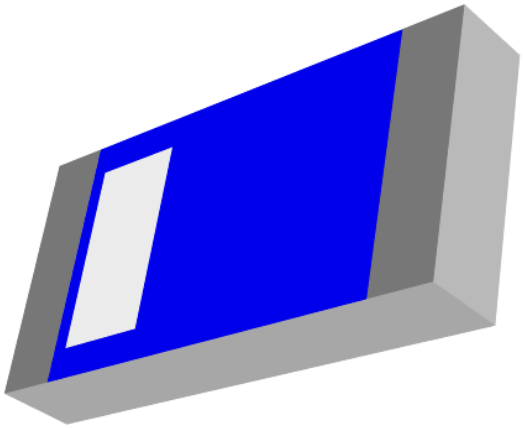

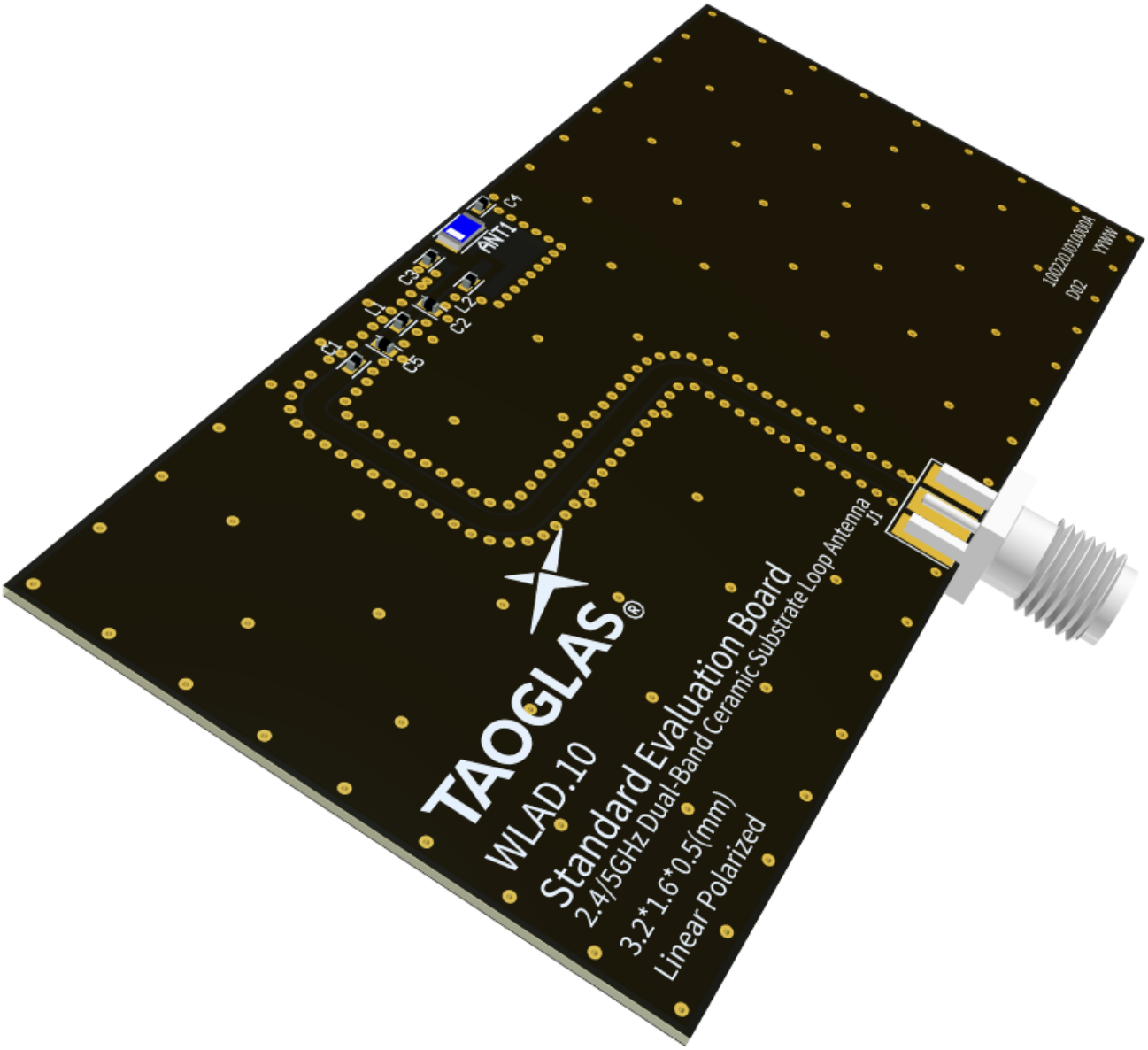

6.1 Schematic Symbol and Pin Definition

The circuit symbol for the antenna is shown below. The antenna has 3 pins with only three pins as functional.

Pin	Description
1	RF Feed
2	Fine Tuning Element
3	RF Tap

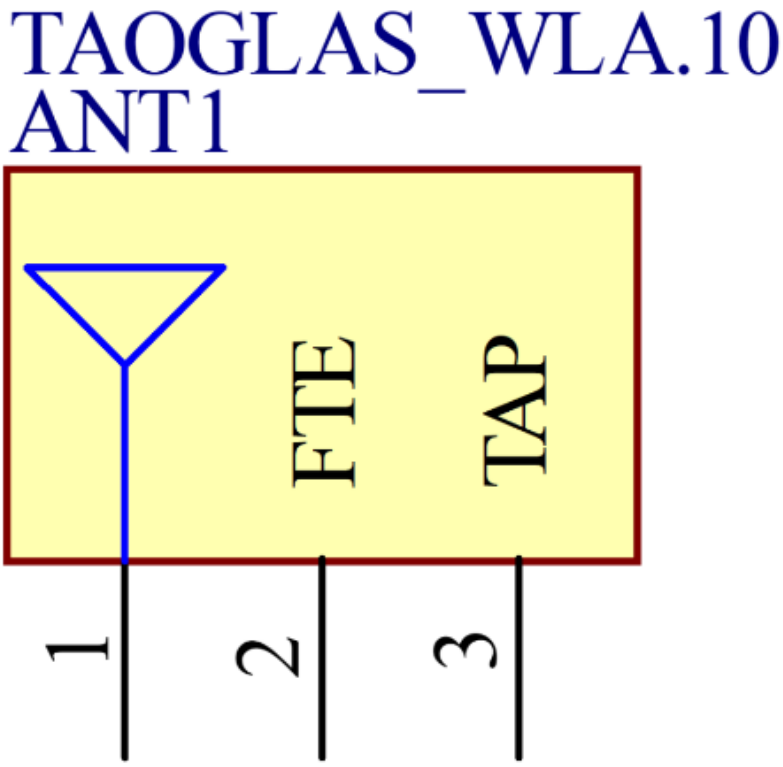

Please note you can download the design files, 3D model, 2D drawings and CST simulation files from the website here:

https://www.taoglas.com/product/3-21-6-0-5mm-wla-10-wi-fi-dual-band-2-4ghz5-8ghz-chip-antenna/

6.2 Antenna Integration

Whatever the size of the PCB, the antenna should ideally be placed on the PCB's longest side, to take advantage of the ground plane. Optimized matching components can be placed as shown.

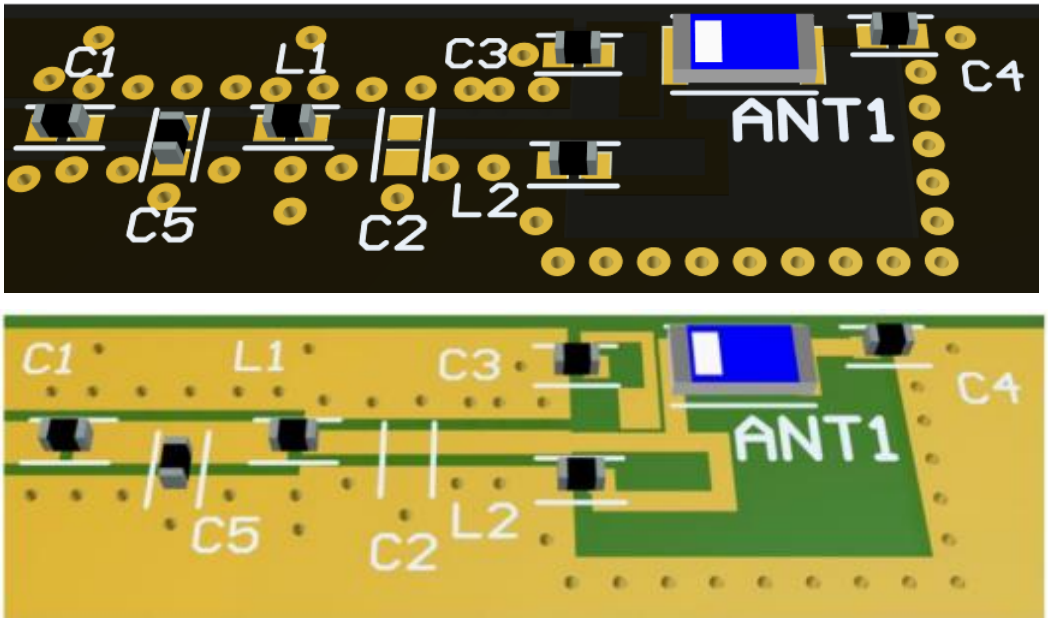

6.3 PCB Layout

The footprint and clearance on the PCB must meet the antenna specification. An example of the PCB layout shows the antenna footprint with clearance. Note the placement of the component L2 & C4. These are connected to Pin 1 & 3 of the antenna and helps with fine-tuning of the antenna. Further, note the placement of the additional components L1, C2, C5. These form a pi-matching network to help with matching the antenna in its final environment.

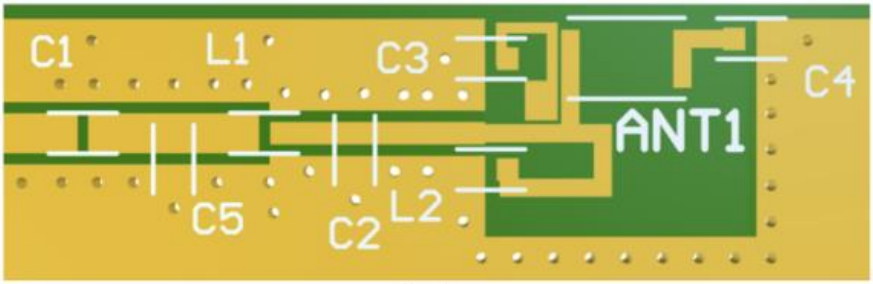

Topside

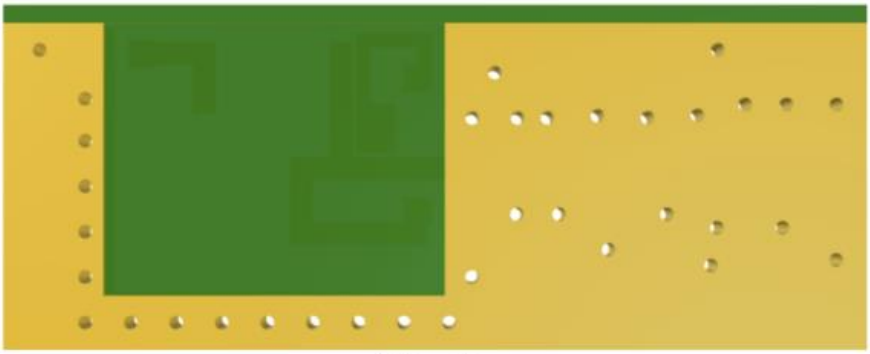

Bottom Side

6.4 PCB Keep Out

Below shows the antenna footprint and clearance through ALL layers on the PCB. Only the antenna pads and connections to feed and GND are present within this clearance area (marked RED). The clearance area extends to 6mm in length & 7.5mm in width. This clearance area includes the bottom side and ALL internal layers on the PCB.

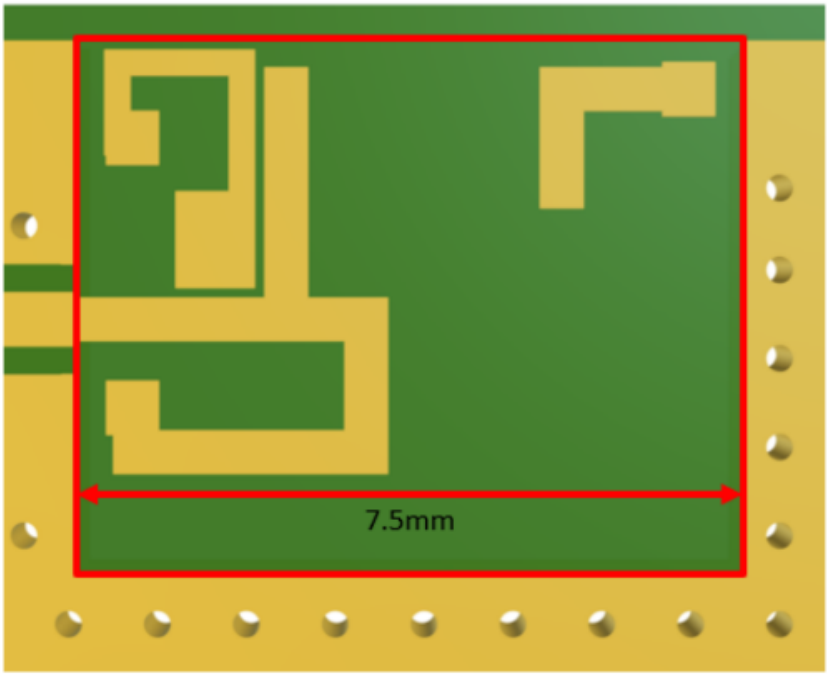

Topside

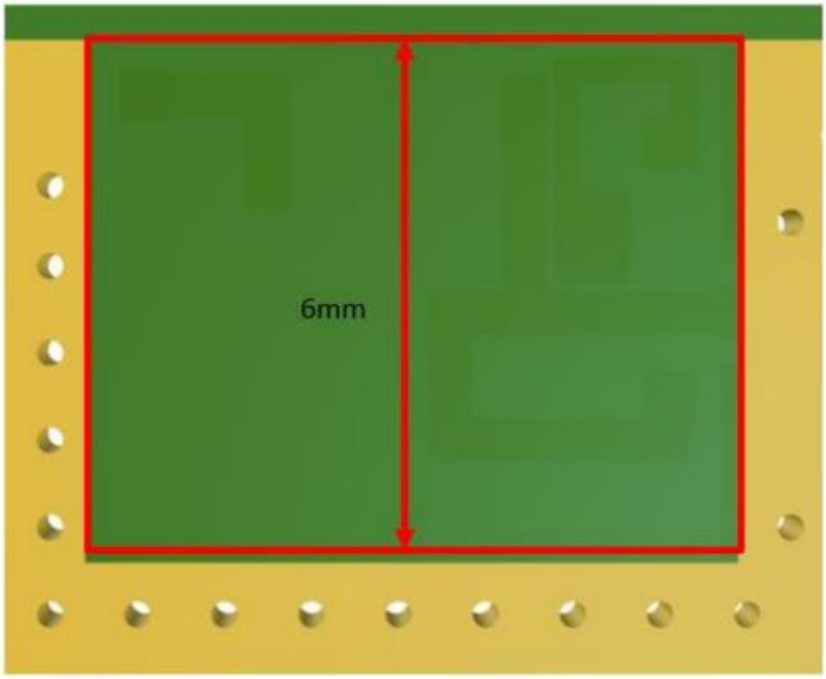

Bottom Side

6.5 Evaluation Board

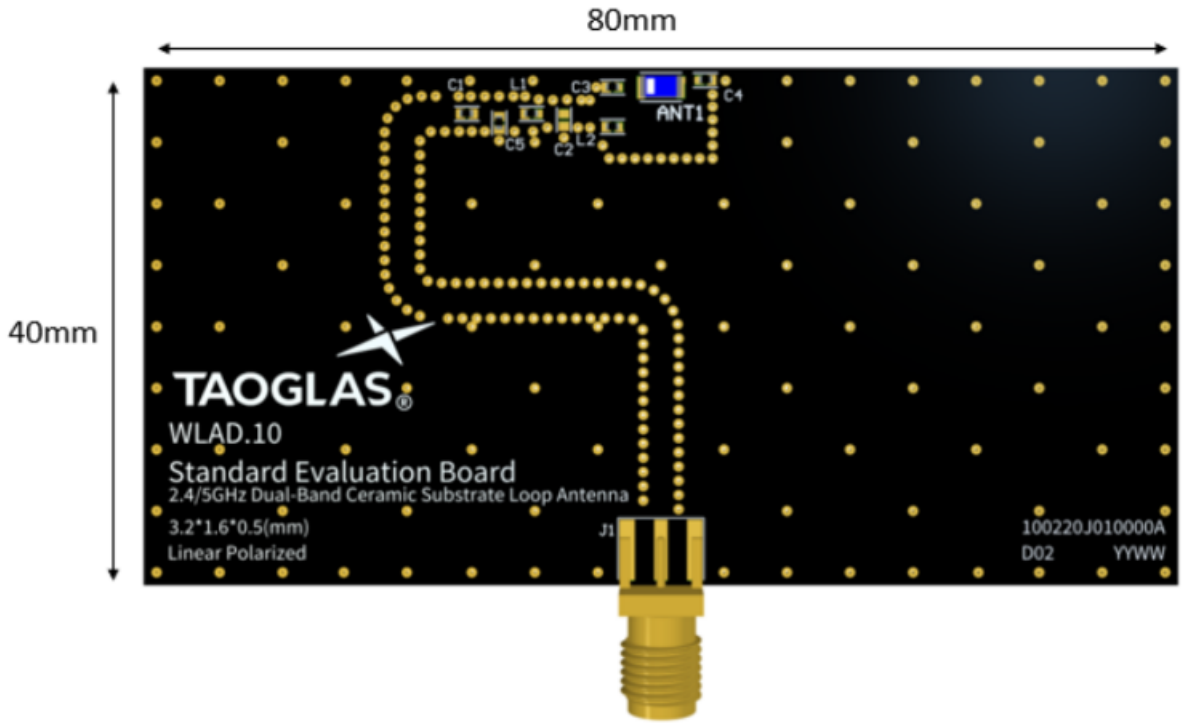

Topside

Bottom Side

6.6 Evaluation Board Matching Circuit

Matching components for the WLA.10 are required for the antenna to have optimal performance on the evaluation board, located outside of the copper clearance in the space specified in the above images. Additional matching components may be necessary for your device, so we recommend incorporating extra component footprints, forming a “pi” network, between the radio module and the antenna.

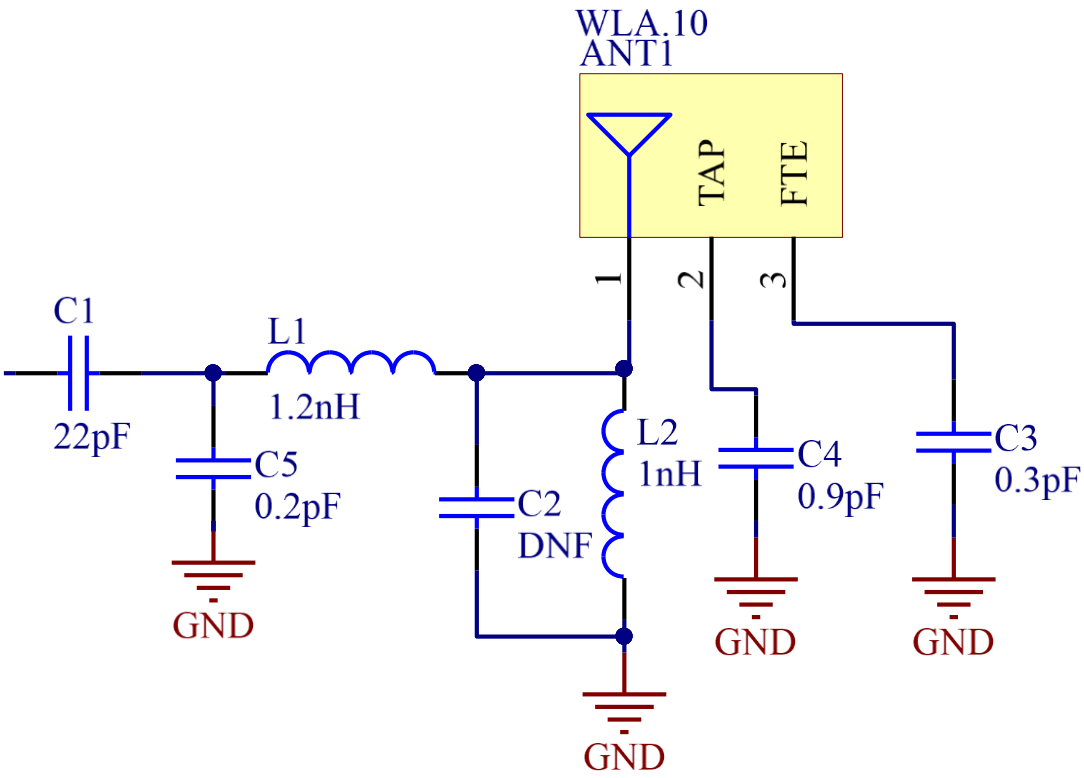

Designator	Type	Value	Manufacturer	Manufacturer Part Number
L1	Inductor	1.2nH	TDK	MLK1005S1N2ST000
L2	Inductor	1nH	TDK	MLK1005S1N0ST000
C1	Capacitor	22pF	Murata	GRM1555C1H220JA01D
C2	Capacitor	DNF	-	-
C3	Capacitor	0.3pF	Murata	GRM1555C1HR30CA01D
C4	Capacitor	0.9pF	Murata	GRM1555C1HR90CA01D
C5	Capacitor	0.2pF	Murata	GRM1555C1HR20WA01D

6.7 PCB Footprint (Pad Dimensions)

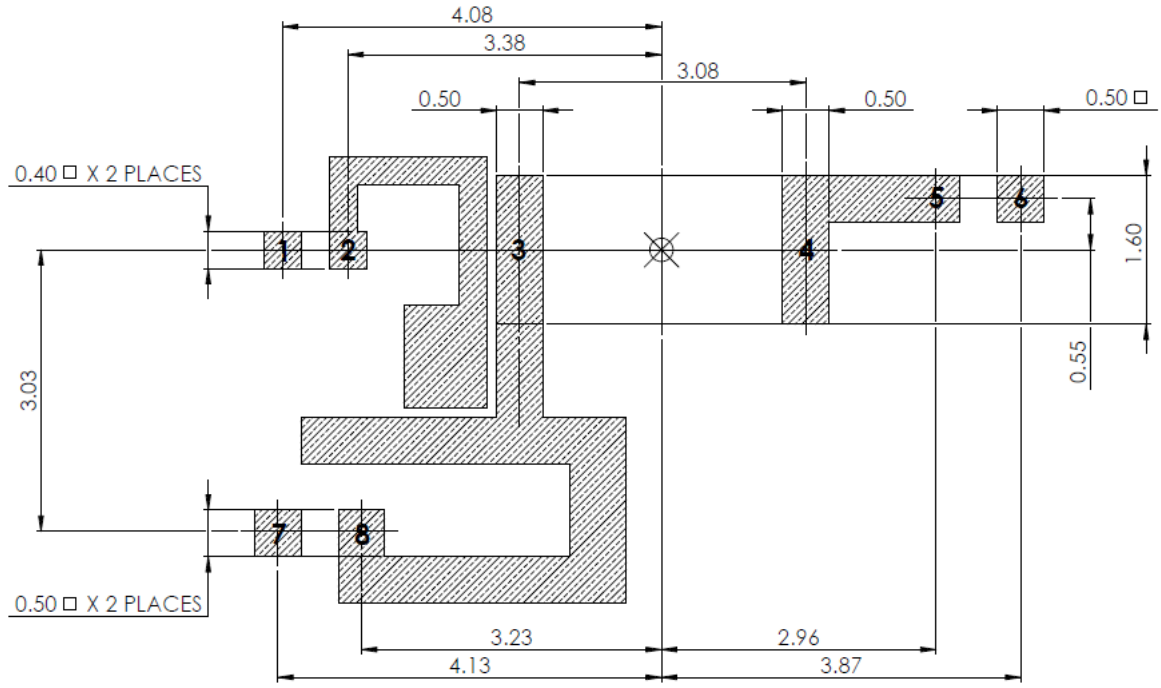

6.8 PCB Footprint (Trace Dimensions)

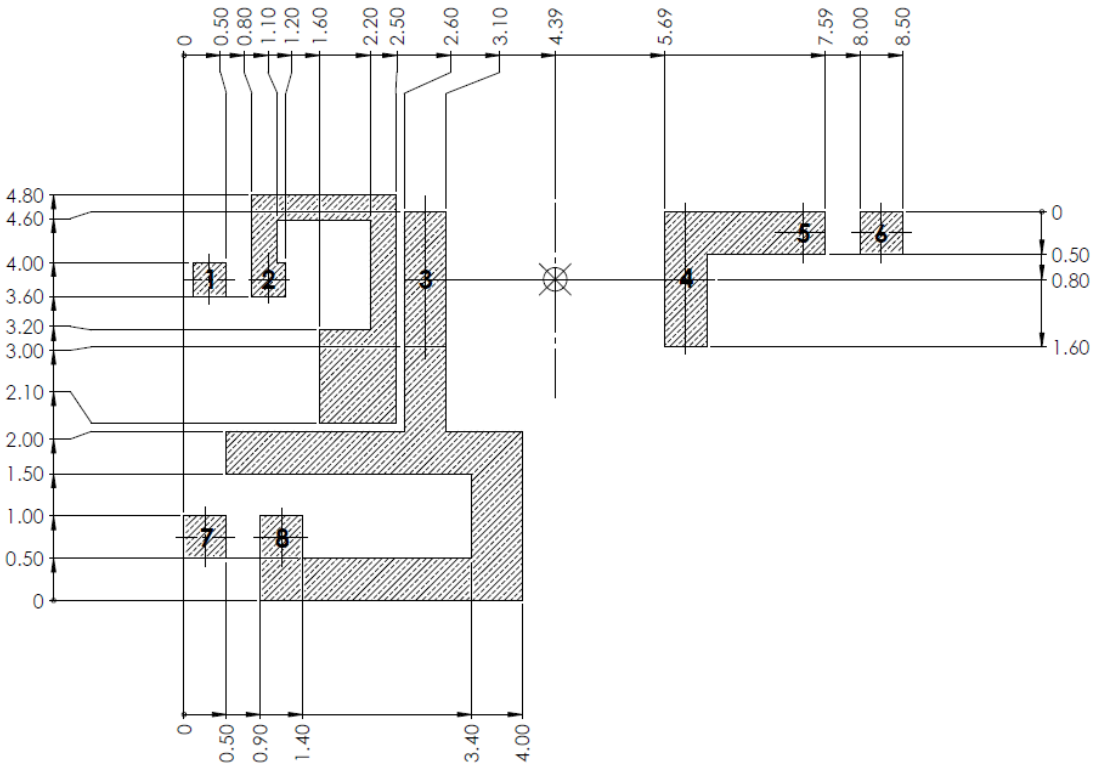

6.9 Copper Keepout Area

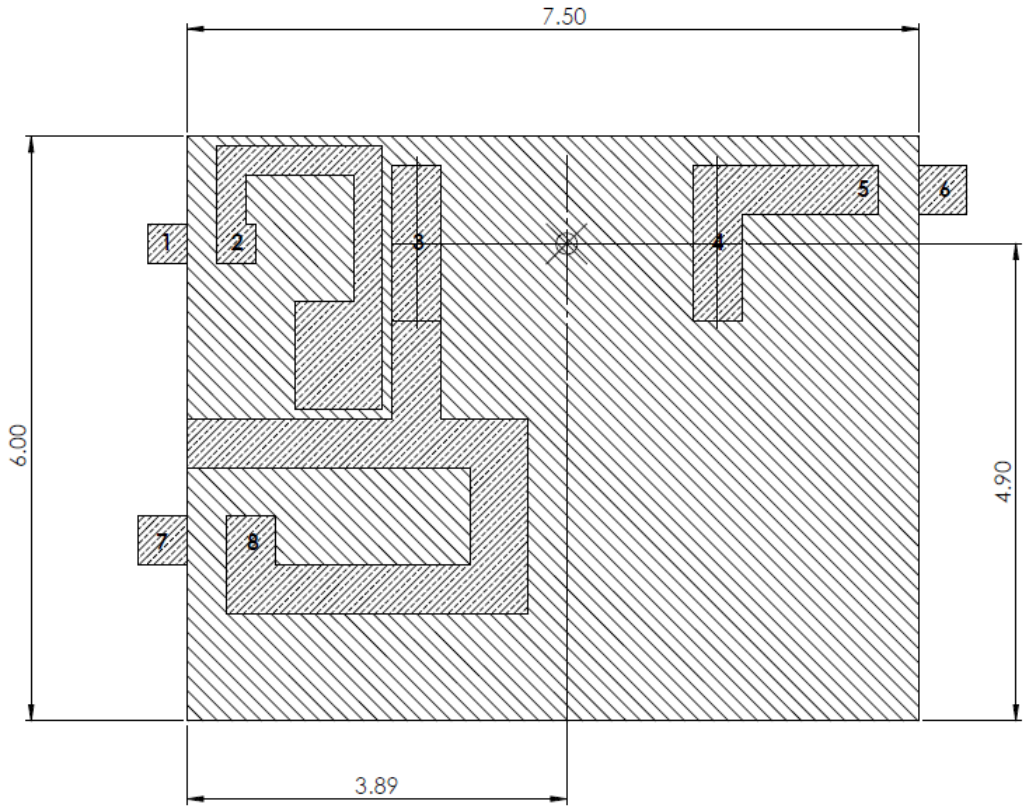

6.10 Top Solder Paste

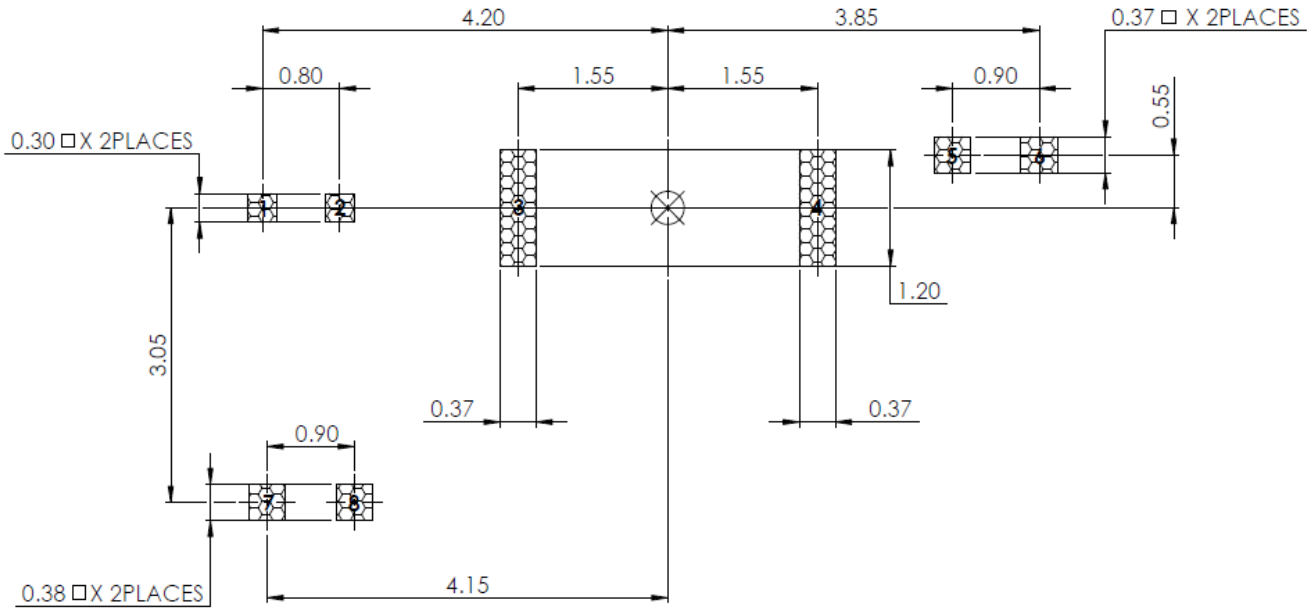

7. Solder Reflow Profile

The WLA.10 can be assembled by following the recommended soldering temperatures are as follows:

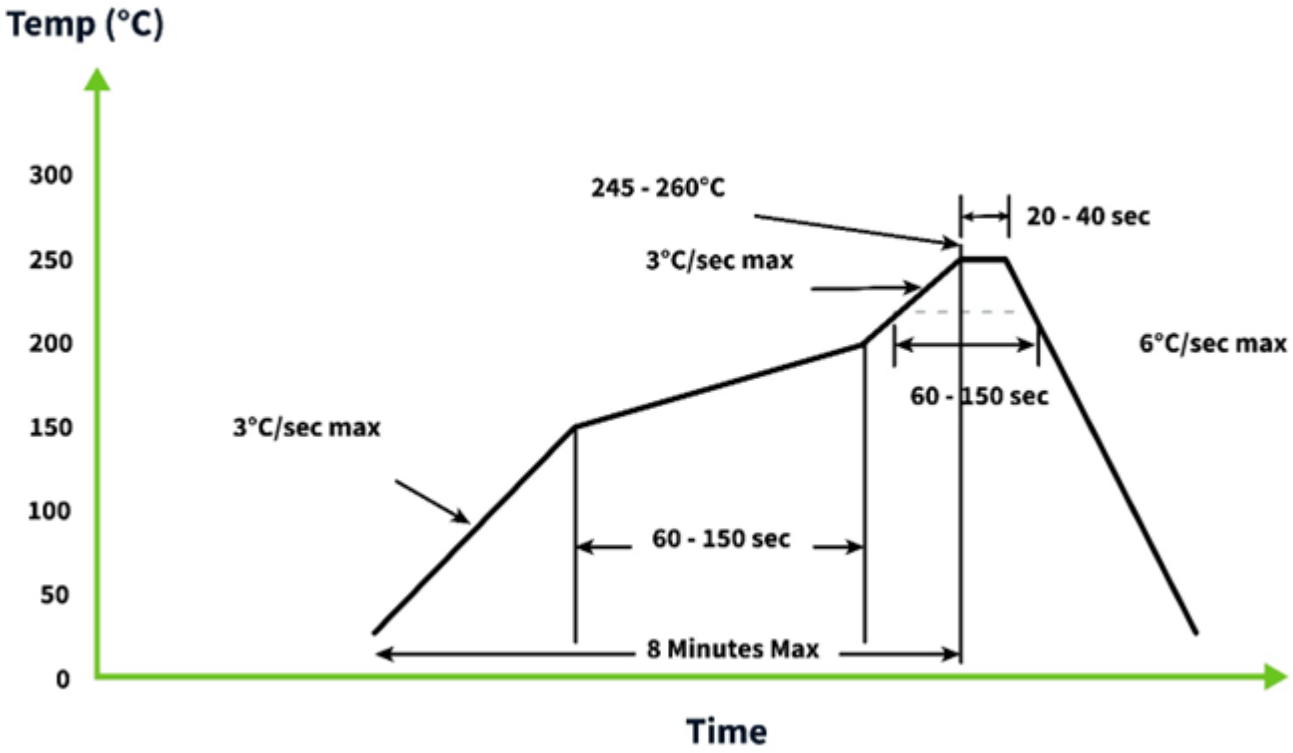

*Temperatures listed within a tolerance of +/- 10º C

Smaller components are typically mounted on the first pass, however, we do advise mounting the WLA.10 when placing larger components on the board during subsequent reflows.

8. Packaging

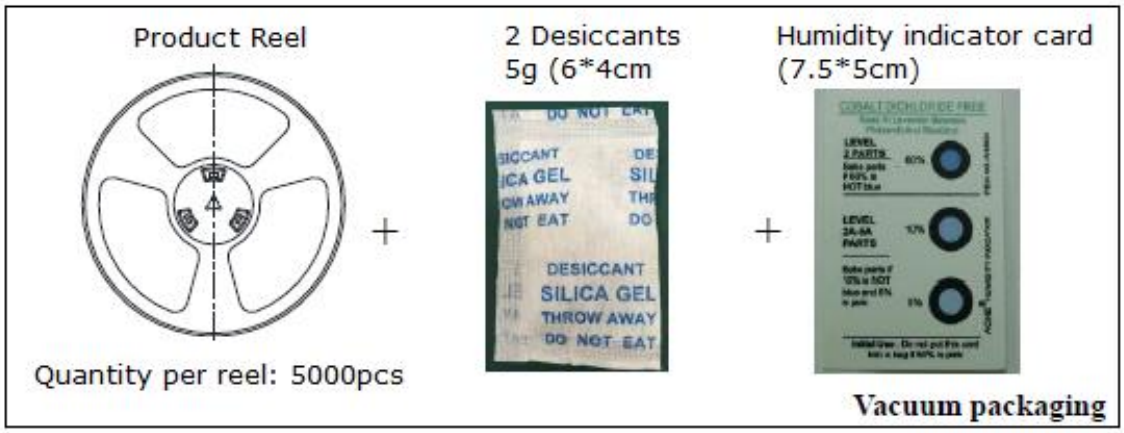

9 reels / 45000 pcs in one carton
Carton Dimensions - 350*350*210mm
Weight - 9Kg

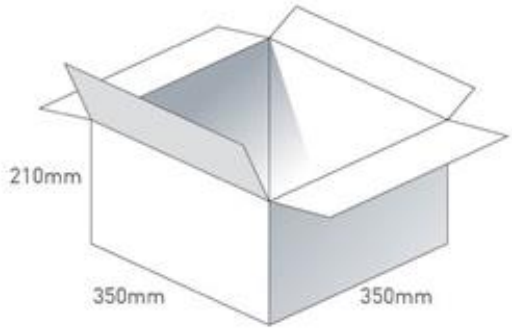

Pallet Dimensions 1050*700*1410mm
36 Cartons per Pallet
4 Cartons per layer
9 Layers

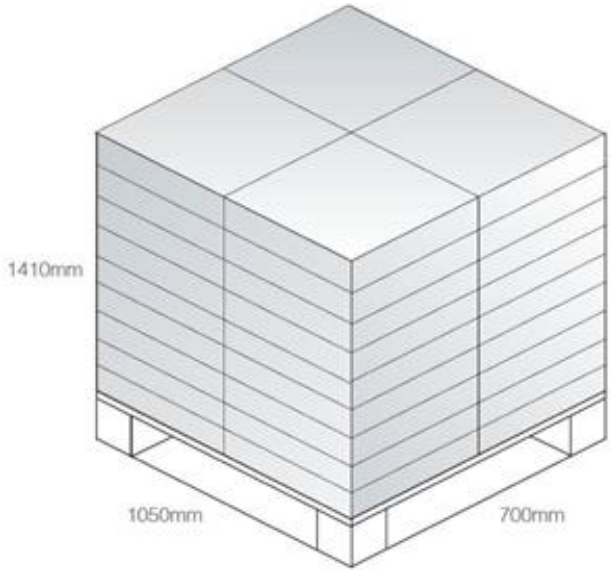

Changelog for the datasheet

SPE-16-8-052 - WLA.10

Revision: F (Current Version)	
Date:	2023-09-05
Changes:	Updated Solder Reflow Information
Changes Made by:	Cesar Sousa

Previous Revisions

Revision: E	
Date:	2022-12-09
Changes:	Updated antenna integration guide.
Changes Made by:	Gary West

Revision: D	
Date:	2022-05-24
Changes:	Antenna temperature range updated. (ISO16750-4 - 5.1.2.2)
Changes Made by:	Gary West

Revision: C	
Date:	2022-01-14
Changes:	Updated Antenna Integration Guide
Changes Made by:	Gary West

Revision: B	
Date:	2021-10-04
Changes:	Full datasheet template update, Addition of MSL & Integration Guide.
Changes Made by:	Gary West

Revision: A (Original First Release)	
Date:	2016-05-17
Notes:	
Author:	Technical Writer

TAOGLAS®

www.taoglas.com

© Taoglas