BION

POWER METER F2, F5
NOZA P1, ST100, PWS01
GW1600, DC100, SBP100

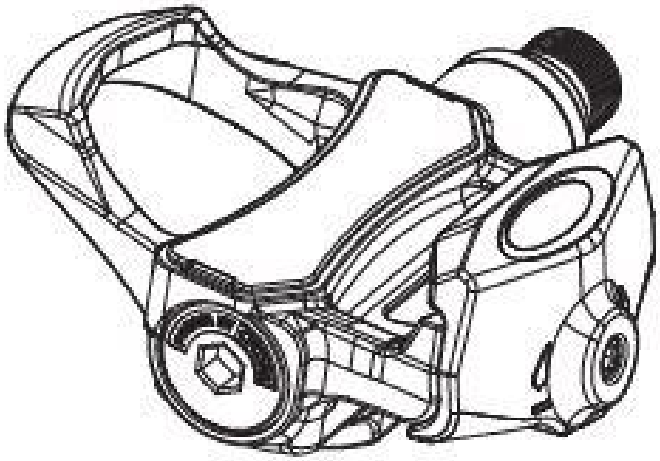

Operating Manual

Agent

Agent for Service Entity Name: Bion Cycle Inc.
Contact Address: 65 08 182street
Fresh Meadows, NY 11365
United States
ContactPhone: (718) 353-4090

Table of Contents

1. Package Contents
2. Tools Required
3. Installation
4. Pairing
5. Calibration
6. Installation
7. Battery
8. Weight
9. Precautions
10. Warranty

⚠**WARNING: Before using this product, please read this manual completely. Improper use could result in damage to the product or lead to injury.**

Package contents

a. Pedal Body
b. Front Binding (fixed)
c. Axle
d. Rear Binding (adjustable)
e. Tension Adjuster
f. Cleats x 2
g. Cleat washers x 6
h. Cleat bolts x 6

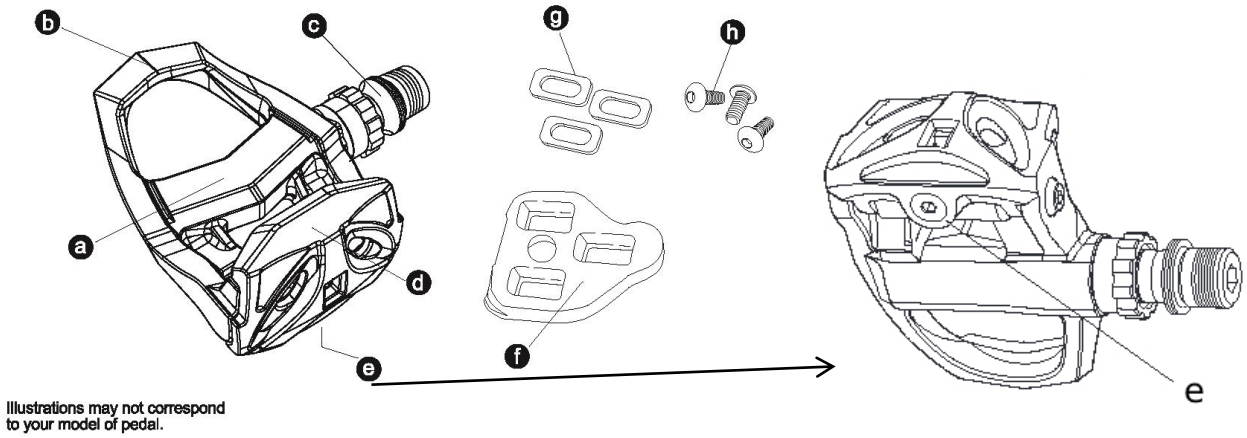

Tools required

6mm or 8mm Allen Key, (depending on pedal model), 4mm Allen key, 3mm Allen key

Pedal installation

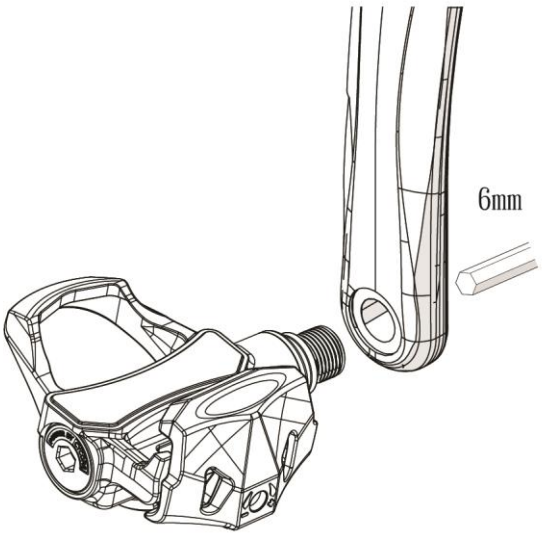

Noted: Please see the instruction and install your pedal properly to avoid damage. The Left pedal is marked with the letter “L” and the right pedal with the letter “R”. It is important step to identify the proper pedal because the left pedal tightens in counterclockwise and the right pedal tightens clock wise.

By using a little bike grease on the pedal arm, it can make installation smoother. Use the 5mm hex, the right pedal screws onto the crank clockwise and the left pedal screws onto the crank counterclockwise.

Cleat Installation

Left and right cleats are identical – the pointed end faces the toe of the show.

1. Lightly lubricate cleat bolt threads with oil
2. Using the 4mm Allen key attach cleat bolts and cleat washers loosely to shoe soles. The lateral center line of the cleat should be aligned with the center of the ball of the shoe sole. Adjust vertically via slots in shoe sole. Adjust horizontally via play between cleat washer and cleat.
3. Tighten cleats very firmly, but avoid excessive force. Tightening torque: 50-80 khf/cm (43-69 lb-in) Cleat position can be fine-tuned to preference after trial rides. It may take some time to find your optimum cleat set-up.

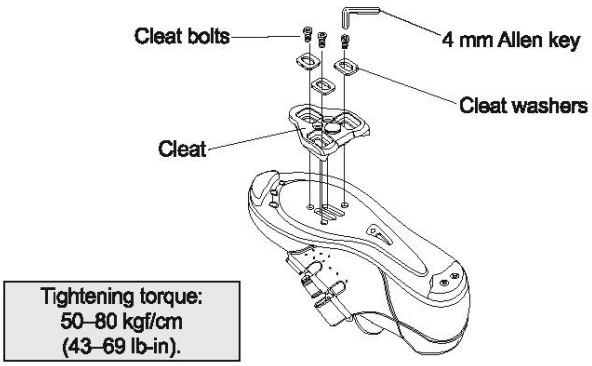

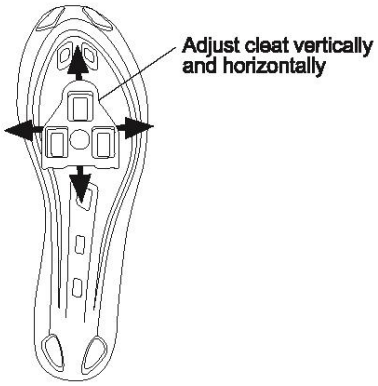

Pedal adjustment and shoe/pedal use

Depending on the model of your pedals, the tension adjuster is located on the rear binding, or on the top of the pedal body. To adjust rear binding tension, use a 3mm Allen key to turn tension adjuster.

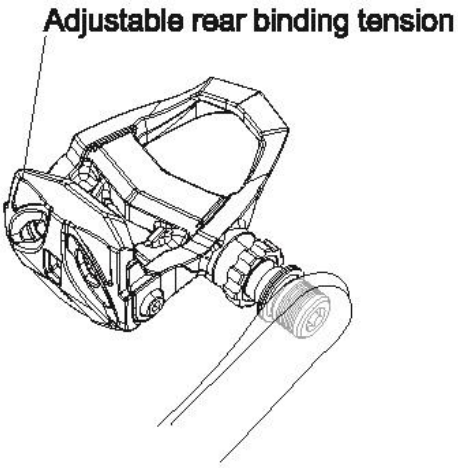

Binding adjustment range:
80–140 kgf/cm (69–121 lb-in).

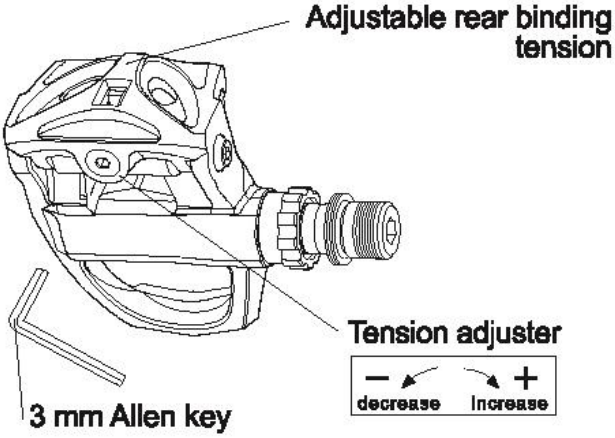

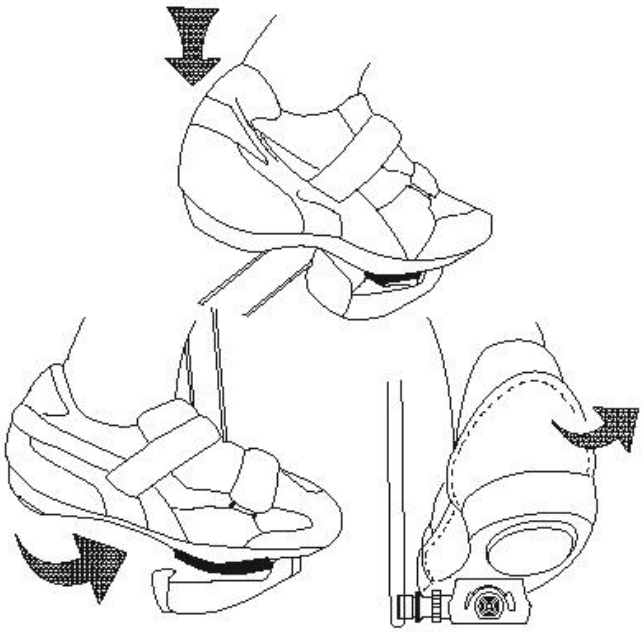

1. Increase tension in a clockwise direction (+) (for a more secure shoe/pedal bind, but more difficult engagement and disengagement).
2. Decrease tension in a counter-clockwise direction (-) (for less secure shoe/pedal bind but easier engagement and disengagement).

Engage cleat shoes in pedals by aligning the cleat between front and rear binding while pushing down.

Disengage by twisting heel outwards (away from bicycle).

Do not over-tighten or over-loosen tension adjustor (over-tighten may damage thread, and bolt may fall out if too loose).

Pairing

Pedal will need to be paired one side at a time. It does not matter which side paired first.

The pedal includes BLE and ANT+ protocols pair the pedal to any device using either of these protocols.

1. The distance of the bike computer and the sensor can't exceed 3m.
2. Open your bike computer and entering Set Mode -> SET SENSOR -> POWER ->
3. Turn the crank a few turns and it will automatically pair with your bike computer

Pedal will automatically switch on by turning the pedal or starting a ride

Calibration

It is not necessary to perform a zero-offset before every ride; however, it is recommended to zero-offset once in a while to make sure it's accuracy.

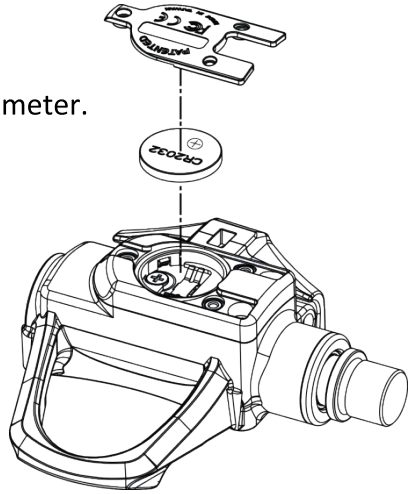

Please see the following steps for zero reset of power pedal:

1. Spin the cranks backwards a few times to wake up the power meter.
2. In order to have the calibration successful, please make sure both power pedal connect successfully each other with green flashing light displaying on the left pedal.
3. Position the cranks should be as vertical as possible to the ground (the left pedal must to at 6 o'clock and the right one at 12 o'clock.) for accurate calibration.
4. Download our APP, Ride for Life App, find the calibration page and select Calibrate.
5. You should receive the message saying "Calibration Successful."

Battery

CR2032x1 (one side) 3Vdc 200mA

To install or replace the battery use screwdriver to remove the battery cover. Remove the battery and recycle. Insert new battery into the power meter in clean/dry environment. Then, replace battery cover and do not overwind.

Weight

224.4g including battery (one side)

Precautions

To keep the power meter in good condition, do not approach to the strong magnets which mean if the pedals are close to the strong magnets, they may perform the atypical data. Avoid soaking the pedals in water or use the high pressure squirt to clean up the pedals. Also, some hazardous substance will cause damage to the pedals like toxic solvents. Please make sure the pedals are under normal use usage.

Warranty

During the warranty period, under the normal use and service, the BION F2 or F5 pedal will be free from physical defects in material and workmanship, or the product will be repaired or replaced as determined by BION dealer. We provide 2 years limited warranty for its products only to the person or entity that originally purchased the product from BION dealer or its authorized distributor or retailer.

Warranty does not apply, if

- The warranty period is expired
- Normal wear and tear
- Unauthorized alternation to or change of parts or components of the product
- Damage caused by human factors, accident, misuse of the product, improper maintenance, assembly, and failure to follow instructions or warnings in Owner's Manual.

Warning Statements

Any changes or modifications not expressly approved by the party responsible for compliance could void your authority to operate the equipment.

Note: This equipment has been tested and found to comply with the limits for a Class B digital device, pursuant to part 15 of the FCC Rules. These limits are designed to provide reasonable protection against harmful interference in a residential installation. This equipment generates, uses and can radiate radio frequency energy and, if not installed and used in accordance with the instructions, may cause harmful interference to radio communications. However, there is no guarantee that interference will not occur in a particular installation. If this equipment does cause harmful interference to radio or television reception, which can be determined by turning the equipment off and on, the user is encouraged to try to correct the interference by one or more of the following measures:

—Reorient or relocate the receiving antenna.

—Increase the separation between the equipment and receiver.

—Connect the equipment into an outlet on a circuit different from that to which the receiver is connected.

—Consult the dealer or an experienced radio/TV technician for help.

This device complies with part 15 of the FCC Rules. Operation is subject to the following two conditions: (1) This device may not cause harmful interference, and (2) this device must accept any interference received, including interference that may cause undesired operation.

RF exposure statements

1. This Transmitter must not be co-located or operating in conjunction with any other antenna or transmitter.