COLL-3151

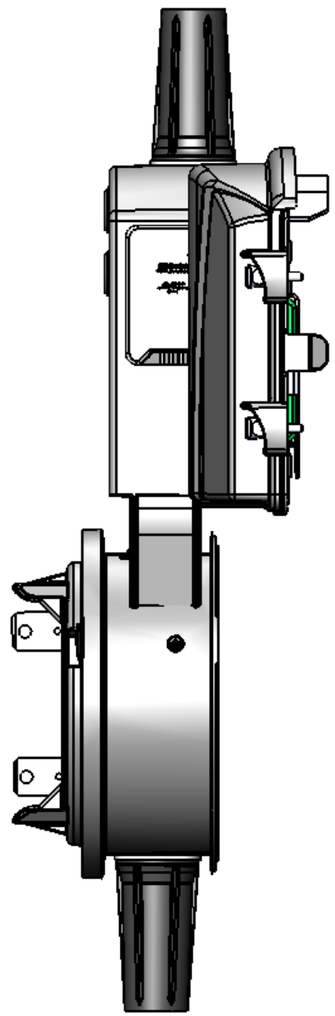

Side view

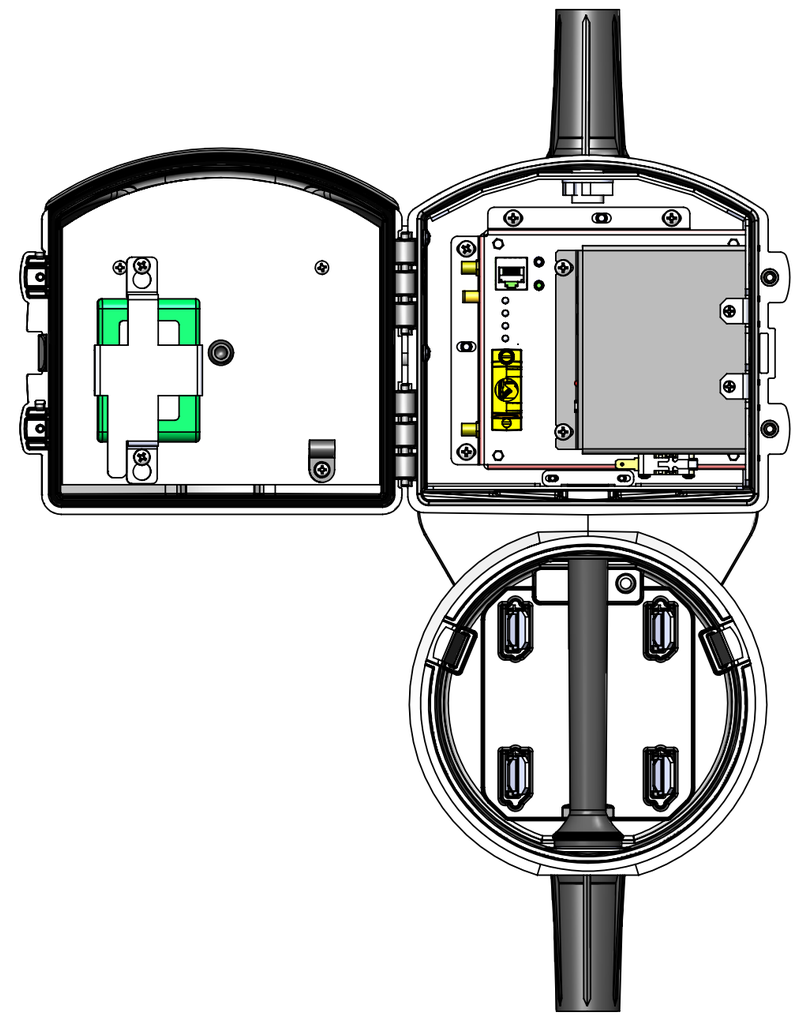

Front view

RoHS Compliant

THE INFORMATION CONTAINED IN THIS DRAWING IS THE SOLE PROPERTY OF TRILLIANT INC. AND ANY REPRODUCTION IN PART OR WHOLE WITHOUT THE WRITTEN CONSENT OF TRILLIANT INC. IS PROHIBITED.

UNLESS OTHERWISE SPECIFIED, DIMENSIONS ARE IN INCHES
TOLERANCES ARE:

0.00 < X < 0.25	±0.015
0.25 < X < 1.00	±0.015
1.00 < X < 3.00	±0.015
3.00 < X < 10.00	±0.015
10.00 < X	±0.015
ANGLES ±0.5°	DRAFT ±0.25°

MATERIAL

FINISH

COLOR

CAD GENERATED DRAWING,
DO NOT MANUALLY UPDATE
DO NOT SCALE DRAWING

Third Angle projection

APPROVALS	DATE
DRAWN C.Fontaine	2015-11-18
CHECKED	

Trilliant Networks Inc.
610 Du Luxembourg
Granby, Québec J2J 2V2

COLL-3151, Generic, Socket-Mounted Collector, Final assembly

SIZE B | DWG. NO. AL-0467A | REV.

SCALE 1:3 | CAD FILE: AL-0467A | SHEET 1 OF 5

Item	Qty	Description	Manufacturer	Triliant P/N
1	1	NCC With Mini PCI card, Telit LTE modem, FW, for COLL-3151		BF-R0004A
2	1	COLL-3151, Enclosure assembly		BL-0158A
3	1	PCA, BATTERY CHARGER 85-277Vac, 200mA charging current		CL-0207C
4	1	PCA, Pwr Ctrl and Ethernet Interface		CL-R0359B
5	1	Rechargeable NI-MH battery pack 12V 2.2Ah, with 2x2 connector & fuse		EB-0011C
6	1	LIMIT SWITCH SPDT 10A-250VAC CHASSIS MOUNT Tab 4.8x0.5, WITH ROLLER ACTUATOR		ES-0005C
10	1	Power harness for COLL-3151, DB-15 to rectangular connectors and Faston		HC-0165A
20	1	CABLE CLAMP, DIAM= 1/4", C. TO C. = 0.44" to 0.46", NYLON, BLACK		HM-0009A
22	1	Mounting bracket for battery pack EB-0011, alu 0.051", RoHS		HM-0204C
23	1	Isolator for Battery charger, COLL-3151, Nomex 410, 0.010", V-0		HM-0209B
25	1	Bracket for NCC/Pwr Ctrl assembly, COLL-3151, 0.064" Alu/TCP, RoHS		HM-0320A
26	1	Cover for Power Supply-Battery charger, COLL-3151, 0.064" Alu/TCP, RoHS		HM-0323A

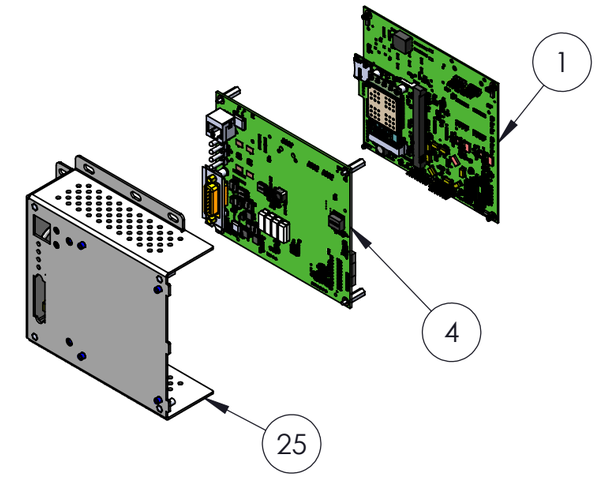

Detail A

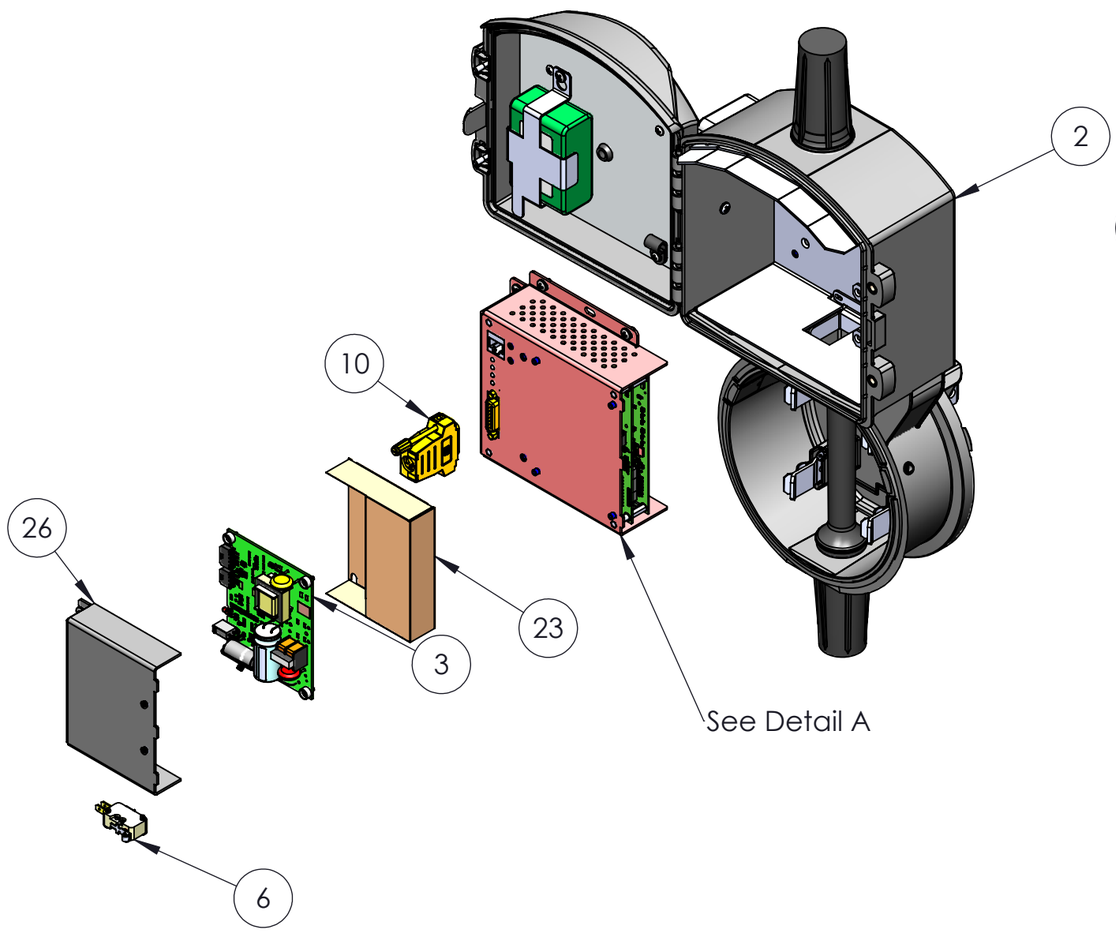

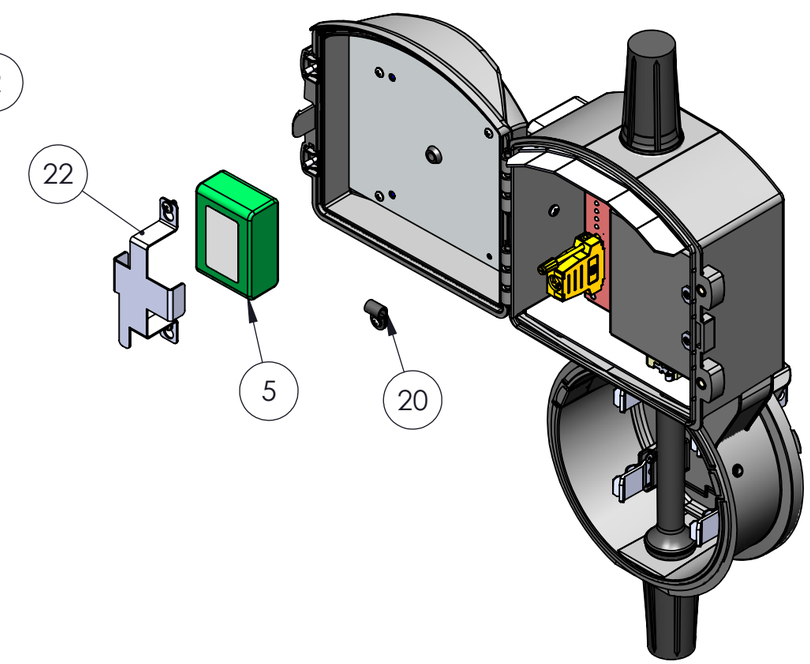

RoHS Compliant

THE INFORMATION CONTAINED IN THIS DRAWING IS THE SOLE PROPERTY OF TRILLIANT INC. AND ANY REPRODUCTION IN PART OR WHOLE WITHOUT THE WRITTEN CONSENT OF TRILLIANT INC. IS PROHIBITED.

UNLESS OTHERWISE SPECIFIED, DIMENSIONS ARE IN INCHES
TOLERANCES ARE:
0.00 < X < 0.25 ±0.015
0.25 < X < 1.00 ±0.015
1.00 < X < 3.00 ±0.015
3.00 < X < 10.00 ±0.015
10.00 < X ±0.015
ANGLES ±0.5° DRAFT ±0.25°

MATERIAL

FINISH

COLOR

CAD GENERATED DRAWING,
DO NOT MANUALLY UPDATE
DO NOT SCALE DRAWING

Third Angle projection

APPROVALS	DATE
DRAWN C.Fontaine	2015-11-18
CHECKED	

Trilliant Networks Inc.
610 Du Luxembourg
Granby, Québec J2J 2V2

COLL-3151, Generic, Socket-Mounted Collector, Final assembly

SIZE B | DWG. NO. AL-0467A | REV.

SCALE 1:4 | CAD FILE: AL-0467A | SHEET 2 OF 5

Item	Qty	Description	Manufacturer	Triliant P/N
1	1	Mini PCI card, Gen3 1Watt Radio, 16 Gb, with FW		CF-R0002B
2	1	PCA, NAN Collector Controller without RJ-45		CL-R0352B
3	1	PCA, Mini PCI to Mini PCIe Converter Card with SIM Socket		CL-R0354A
4	1	TELIT Radio LE910-NAG, Mini PCIe, LTE/HSPA, HW r1, FW 17.01.502, -40/+85°C		EM-0113A

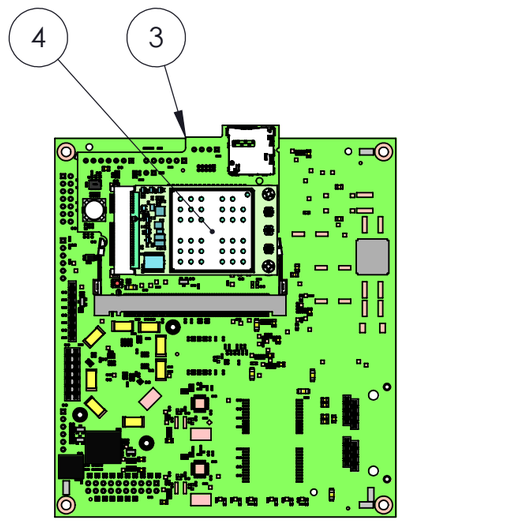

Front View

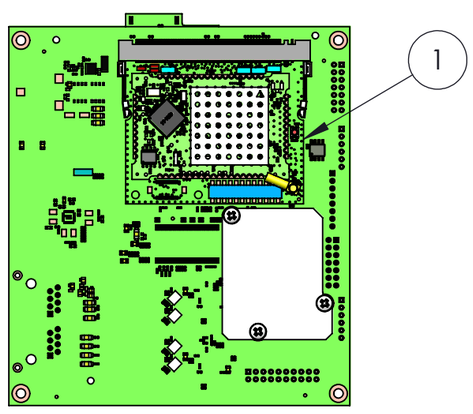

Back View

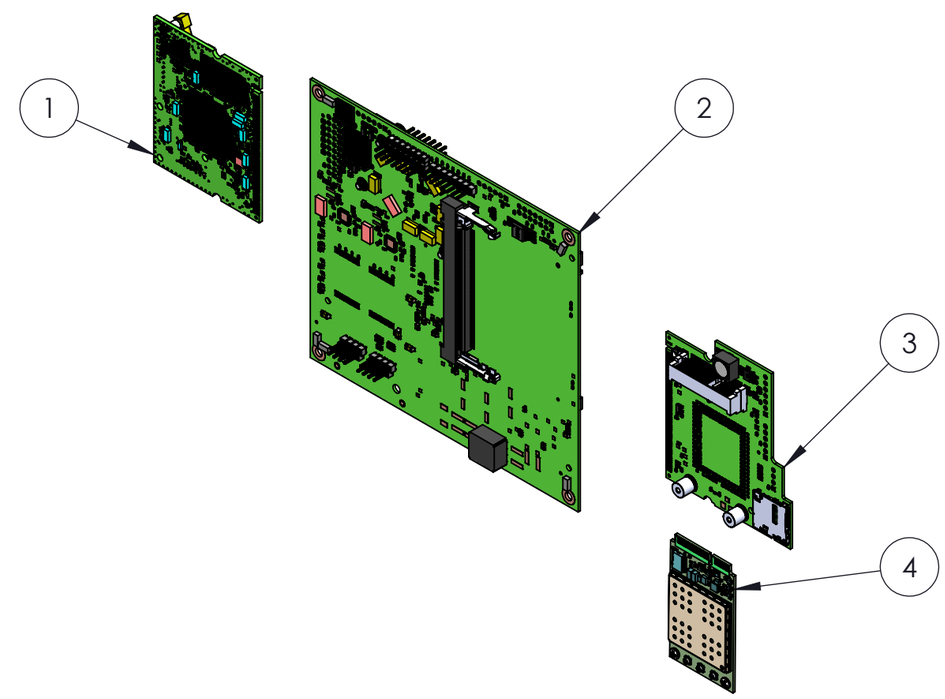

Exploded View

RoHS Compliant

RoHS

THE INFORMATION CONTAINED IN THIS DRAWING IS THE SOLE PROPERTY OF TRILLIANT INC. AND ANY REPRODUCTION IN PART OR WHOLE WITHOUT THE WRITTEN CONSENT OF TRILLIANT INC. IS PROHIBITED.

UNLESS OTHERWISE SPECIFIED,
DIMENSIONS ARE IN INCHES
TOLERANCES ARE:

0.00 < X < 0.25	±0.015
0.25 < X < 1.00	±0.015
1.00 < X < 3.00	±0.015
3.00 < X < 10.00	±0.015
10.00 < X	±0.015
ANGLES ±0.5°	DRAFT ±0.25°

MATERIAL

FINISH

COLOR

CAD GENERATED DRAWING,
DO NOT MANUALLY UPDATE
DO NOT SCALE DRAWING

Third Angle projection

APPROVALS	DATE
DRAWN C.Fontaine	2015-11-18
CHECKED	

Trilliant Networks Inc.
610 Du Luxembourg
Granby, Québec J2J 2V2

NCC With Mini PCI card, Telit LTE modem, FW, for COLL-3151

SIZE B | DWG. NO. BF-R0004A | REV.

SCALE 1:5 | CAD FILE: BF-R0004A | SHEET 3 OF 5

Item	Qty	Description	Manufacturer	Triliant P/N
1	1	Socket-Mounted enclosure, partial assembly		BL-0082B
2	1	ANTENNA 2.4GHZ 2.5dBi, 95x32x9mm, SMA plug Reverse Polarity 90dg + 13" RG-174		EM-0042C
3	1	BODY ANTENNA 694-894 MHZ, 1.7-2.7 MHZ, 3dBi, 14" RG-174 + 90dg SMA plug connector, w/ Insulator		EM-0114A
4	1	BODY ANTENNA 694-894 MHZ, 1.7-2.7 MHZ, 3dBi, 6.25" RG-174 + 90dg SMA plug connector, w/ Insulator		EM-0114B
7	4	Jaw for meter socket adaptor		HM-0001A
9	2	Grounding strap for socket adaptor, SS		HM-0003A
11	1	Ground plane for COLL-3151, NAN side, 0.051'' Alu/TCP, RoHS		HM-0179C
12	1	Plug bumper Thermo plastic black 1/2x1/2"		HM-0194B
13	1	Back plate, COLL-3151, 6.373x6.21x3.272", 0.064" Alu/TCP, RoHS		HM-0319A
14	1	HEAT SHRINK TUBING 1.5", 2:1, L=6.75", BLACK		HM-0327B
15	1	Fixing part for back plate, COLL-3151, 0.064" Alu, RoHS		HM-0328A
16	1	Insulator for antenna stud 5/8'', PTFE, O.D. 1.375 x 0.3'', V-0, RoHS		HM-0329A
17	1	Fiberglass Breather vent		HM-0330A
18	1	Shoulder washer, Nylon, .120L X 1.000A X .130B X .745C X .645D		HM-0331A
19	1	Vent plug		HM-0332A

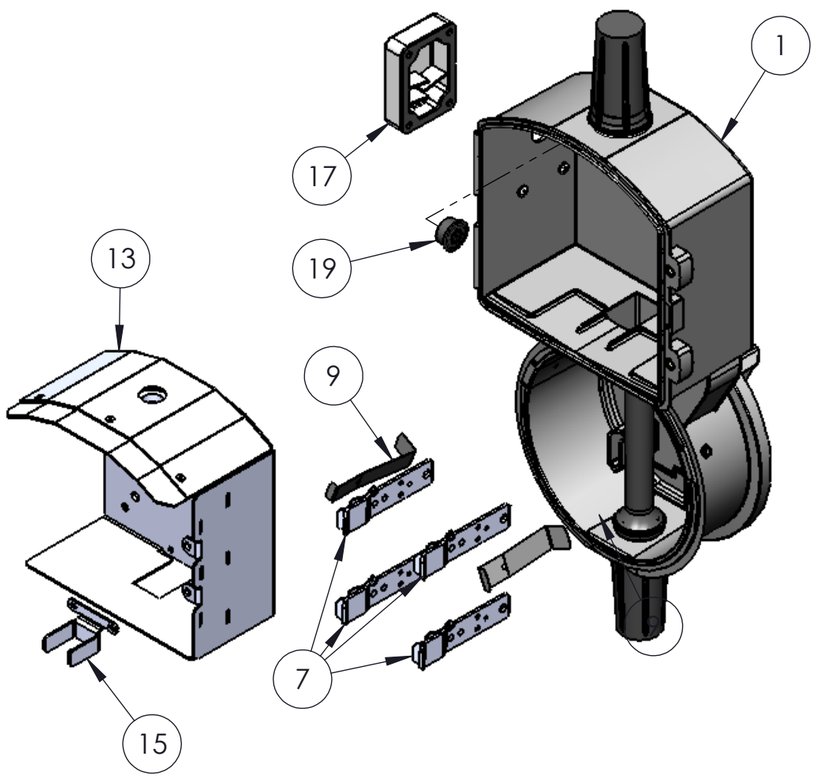

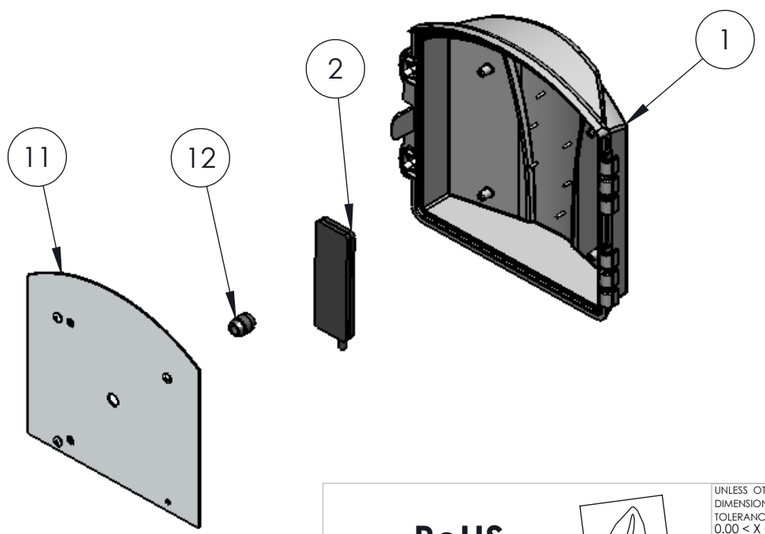

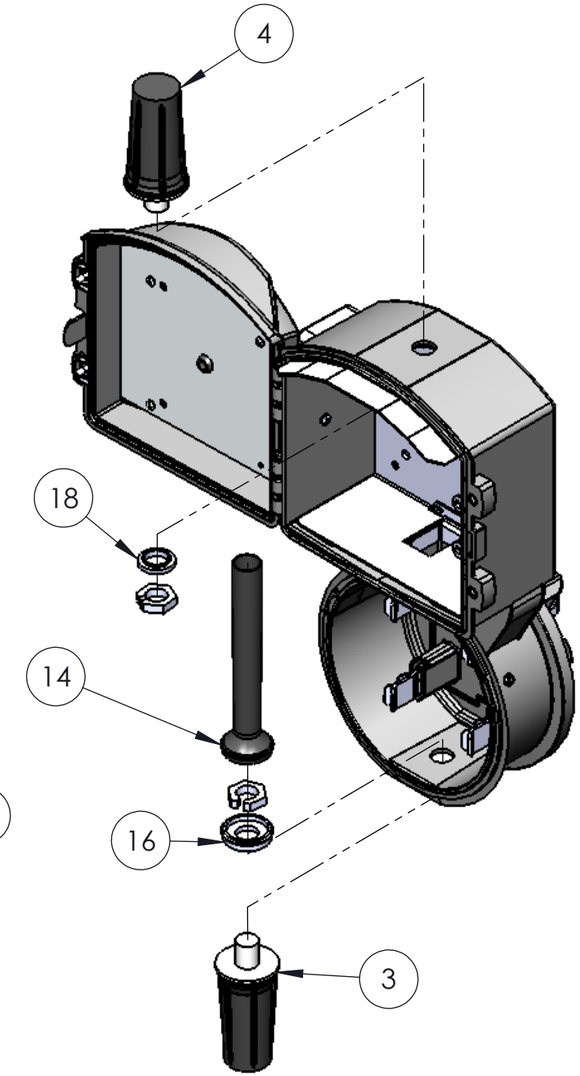

RoHS Compliant

RoHS

UNLESS OTHERWISE SPECIFIED,
DIMENSIONS ARE IN INCHES
TOLERANCES ARE:
0.00 < X < 0.25 ±0.015
0.25 < X < 1.00 ±0.015
1.00 < X < 3.00 ±0.015
3.00 < X < 10.00 ±0.015
10.00 < X ±0.015
ANGLES ±0.5° DRAFT ±0.25°
MATERIAL
FINISH
COLOR

CAD GENERATED DRAWING,
DO NOT MANUALLY UPDATE
DO NOT SCALE DRAWING
Third Angle projection

APPROVALS	DATE
DRAWN C.Fontaine	2015-11-18
CHECKED	

Trilliant Networks Inc.
610 Du Luxembourg
Granby, Québec J2J 2V2

COLL-3151, Enclosure assembly

SIZE B | DWG. NO. BL-0158A | REV.

SCALE 1:4 | CAD FILE: BL-0158A | SHEET 4 OF 5

THE INFORMATION CONTAINED IN THIS DRAWING IS THE SOLE PROPERTY OF TRILLIANT INC. AND ANY REPRODUCTION IN PART OR WHOLE WITHOUT THE WRITTEN CONSENT OF TRILLIANT INC. IS PROHIBITED.

Item	Qty	Description	Manufacturer P/N	Triliant P/N
1	2	HEX STANDOFF 8-32x0.125" BOARD TH.=3/32" BR/NI PL.		HE-0002A
2	1	Enclosure for Socket-Mount Collector, PC 10% GF 5VA		MP-0030A
3	1	Door for Socket-Mount enclosure, PC 10% GF 5VA		MP-0031A
4	1	Sealing gasket for cover MP-0031A, Synprene RT-3805M		MP-0036A
5	2	Side cap for SocketGate, PC		MP-0039A
6	2	CAPTIVE SCREW 8-32x0.610", Slotted head 7/16" diam, BR/NI PL, RoHS		HS-0001C

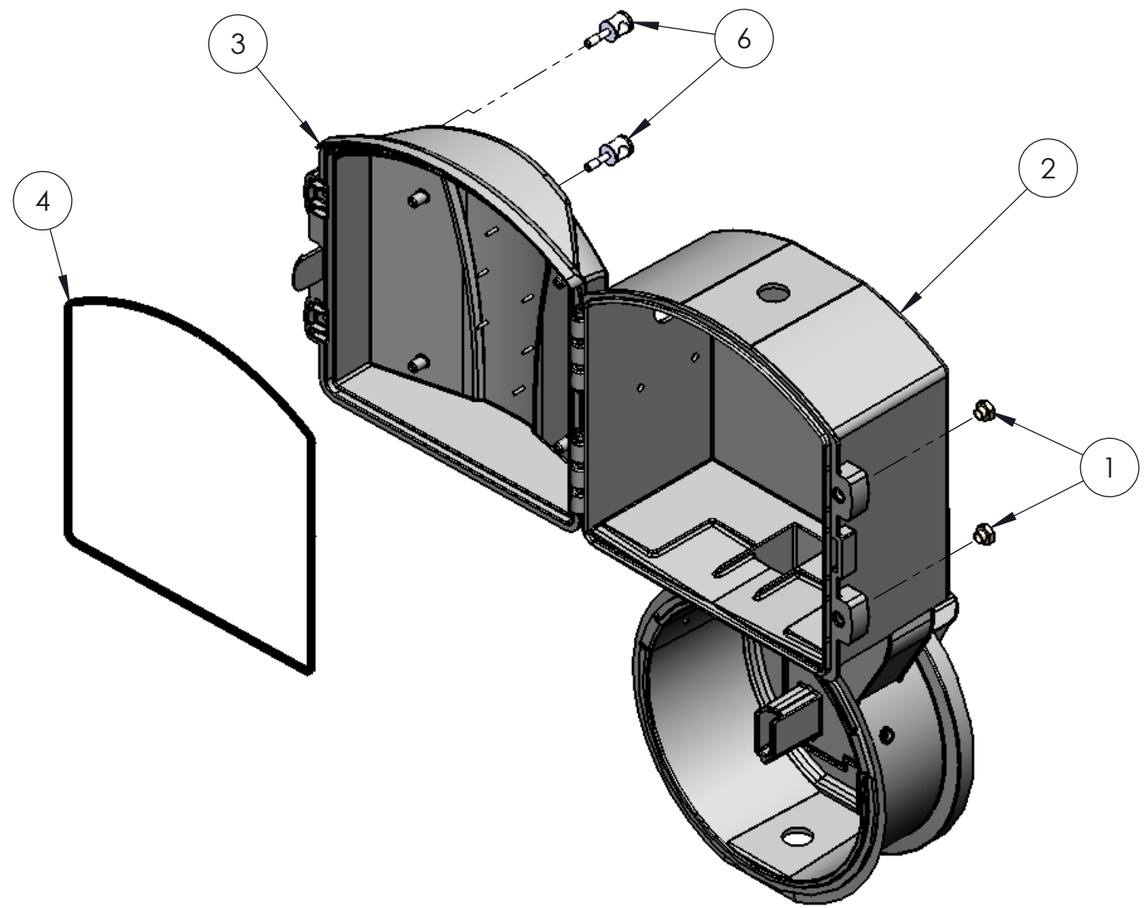

RoHS Compliant

RoHS

THE INFORMATION CONTAINED IN THIS DRAWING IS THE SOLE PROPERTY OF TRILLIANT INC. AND ANY REPRODUCTION IN PART OR WHOLE WITHOUT THE WRITTEN CONSENT OF TRILLIANT INC. IS PROHIBITED.

UNLESS OTHERWISE SPECIFIED,
DIMENSIONS ARE IN INCHES
TOLERANCES ARE:

0.00 < X < 0.25	±0.015
0.25 < X < 1.00	±0.015
1.00 < X < 3.00	±0.015
3.00 < X < 10.00	±0.015
10.00 < X	±0.015
ANGLES ±0.5°	DRAFT ±0.25°

MATERIAL

FINISH

COLOR

CAD GENERATED DRAWING,
DO NOT MANUALLY UPDATE
DO NOT SCALE DRAWING

Third Angle projection

APPROVALS	DATE
DRAWN C.Fontaine	2015-11-18
CHECKED	

Trilliant Networks Inc.
610 Du Luxembourg
Granby, Québec J2J 2V2

Socket-Mounted enclosure, partial assembly

SIZE B | DWG. NO. BL-0082B | REV.

SCALE 1:3 | CAD FILE: BL-0082B | SHEET 5 OF 5