DR5000 Reader

Installation Guide

Document 403-003-001

© 2019. Transact Holdings Inc. All rights reserved.

Table 1: Revision History

Bb Document Part Number	Rev.	Description	Date
403-003-001	A	EC010518. Initial Release.	Pending

-

Transact Inc.	DR5000
FC	Tested To Comply With FCC Standards
FOR HOME OR OFFICE USE	

This device complies with Part 15 of the FCC Rules. Operation is subject to the following two conditions: (1) this device may not cause harmful interference, and (2) this device must accept any interference received, including interference that may cause undesired operation.

Part 15.21: Changes or modifications not expressly approved by the party responsible for compliance could void the user's authority to operate the equipment.

This Class A digital apparatus complies with Canadian ICES-003

Cet appareill numérique de la classes A est conform à la norme NMB-003 du Canada

DR5000 READER INSTALLATION GUIDE

DR5000 Readers is designed to work with Transact SA3000 Door Access and third- party Access Control systems that use a Wiegand interface.

DR5000 Readers support contactless cards using Near Field Communications (NFC) compatible technology. When a contactless card is within range (1.5 inches or less) from the front of the reader, data on the card is read. Card account numbers are stored as up to 48 ASCII numerical digits on the contactless card.

Figure 1-1 DR5000 Reader

Shown with optional trim plate (p/n TRMKT-DR5000)

Reader Installation Overview

When choosing a location to install a DR5000 series reader, consider the following:

- Proximity to entry point
- Visibility and Access to Users
- ADA Requirements
- Protection of the reader from environmental elements
- Cable distance/path to access panel
  - 1200 ft. maximum for RS-485 to Transact SA3032
  - 500 ft. maximum for Wiegand interface

Hardware Kit and Parts List

Table 1-1: Table 1-1: Hardware Kit Parts List

Item No.	Part Number	Description	Qty
1	044-024-019	1 X 4, 3.5MM TERMINAL BLOCK	2
2	044-028-C07	M2 X 5 18-8 SS BUTTON-HEAD SOCKET CAP SCREW	1
3	044-028-E32	6-20 X .5 PH PHILLIPS SELF DRILLING	2
4	044-028-E39	6-32 X 3/4 TRUSS HEAD PHILLIP MACHINE SCREW	2
5	044-030-101	M2 STAINLESS STEEL FLAT WASHER	1
6	044-059-122	DR5000 WALL MOUNT BRACKET	1

NOTE: A single installation does not use all the hardware included.

Figure 1-2 DR5000 Hardware Kit

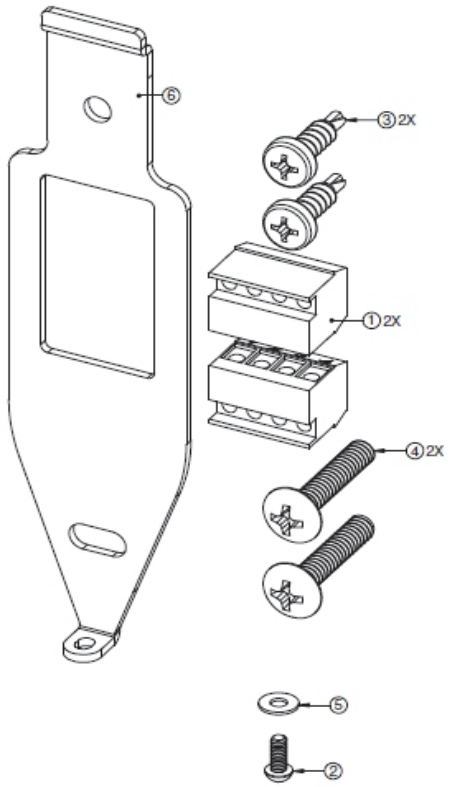

MOUNTING OPTIONS

Figure 1-3 Figure 1-3 DR5000 Mounting Options

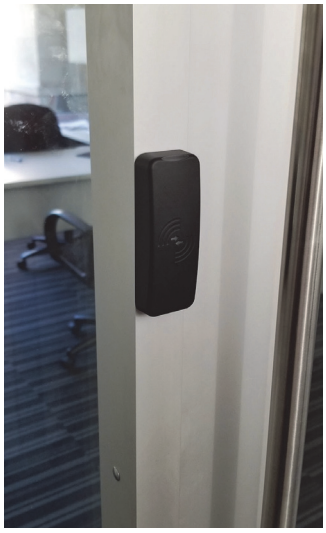

Note: Mounting methods other than those shown have not been evaluated by UL.

Detailed Installation

1. For installations without a trim plate, use the mounting plate as a guide to drill mounting holes and cable route opening in the mounting surface.

   If using trim plate without single gang box, use holes and cable opening in trim plate as a guide to drill mounting holes and cable route opening in mounting surface, Select mounting-hole size based on chosen fastener for the mounting material. The trim plate is optional and can be ordered separately. The trim plate part number is TRMKT-DR5000.

Note: Use appropriate fasteners for the application (#6 x ¾ flathead sheet metal screws are included in hardware kit).

2. Route cable through opening or to the single gang box, see wiring tables on step 6.
3. Install the trim plate if applicable.
   - Single gang box, use #6 x ¾" flathead machine screws
   - Without single gang box, install trim plate using selected fasteners
   - Orientate the trim plate so the slotted hole is located on bottom.
4. Install the mounting plate.
   - If trim plate is used, install mounting plate as shown in Figure 4 using #6 x ¼" panhead machine screws
   - Without trim plate, install mounting plate using #6 x ¾" panhead sheet metal screws or chosen fasteners appropriate for the mounting surface
5. Connect the wires to the terminal blocks. Refer to tables 2 and 3 for wiring connections.

Note: Install in accordance with the National Electrical Code (NEC), ANSI/NFPA 70, and local codes. When using third-party equipment, to maintain UL compliance, the readers must be connected to a UL294 listed access control panel or power supply with an output voltage of 6-24 VDC.

When connecting the DR5000 to the Transact SA3000 Access Control System, typically only TB1 is installed. The SA3000 Door Controller provides power (VCC and GND). Communication is provided by connected the RS-485+/RS-485- to the corresponding signals.

Table 1-2: Figure 1-5 TB1 Connections

#	Description	Transact	3rd Party Wiegand
1	V+ (power) VCC	Door controller	Power Voltage Input (+)
2	GND	Door controller	Ground
3	RS-485 +	Door controller	D0 Data
4	RS-485 -	Door controller	D1 CLK

Table 1-3: Figure 1-6 TB2 Connections

#	Label	Description
1	GLED	GREEN LED
2	RLED	RED LED input
3	BEEP	Beeper input
4	TMPR	Tamper output

Note: To maintain UL compliance, install only 1 wire in each terminal block opening of the DR5000 Reader. When connecting two DR5000s to a single Door Controller, one of DR5000s must have a jumper wire connecting pin 3 to pin 4 on terminal block TB2. This identifies the address on the arbitrated bus. Software detects the jumper and responds to the correct poll messages.

6 Plug the terminal block(s) onto the pins of the DR5000 Reader; and the terminal blocks in the proper locations.

7 Place the reader just above the mounting plate, and then slide down to engage the tab into notch on the back of the reader.

8 Secure reader using the tamper resistant security screw (3/32" tamper hex).

Hold the top of the reader with one hand and while tightening the screw with the other.

Figure 1-4 Figure 1-8 Tamper Resistant Security Screw

READER CONFIGURATION

DR5000 Readers can interface to Transact SA3032 Access Controllers using a serial RS-485 connection. The readers are configured the same as the DR4XXXX series and the legacy SE3-CS and SE3-CSPP readers. When prompted for serial reader(s), select either 1 - SE3-CS/CSPP/RDR100 if only one reader is being installed, or 2 - SE3-CS/CSPP/RDR100 if two readers are being installed.

DR5000 Readers can interface to 3rd party access control panels using the industry standard Wiegand interface. Refer to the 3rd party access control documentation for configuration instructions.

Tamper Operation

The SA3032 door controller continually polls the reader over RS-485 interface. If the reader stops responding to polls, a reader offline condition is detected.

The DR5000 Readers have an optical tamper sensor on the back that senses if the reader is removed from the mounting surface or trim plate. This tamper condition is reported on the additional TAMPER output signal (TB2-4).

READER TESTING

DR5000 Readers do not require maintenance. Test the reader monthly to verify operation.

Test the Card Read Range

1. Hold a valid card approximately 1.5" parallel to reader face.
2. Verify that the Green VALID annunciator turns on.

Test the Card Reader

- Tapping a valid card will turn on the green VALID annunciator
- Tapping an invalid card will turn on the red DENIED annunciator
- If tones are enabled, tapping a valid card will generate a long beep
- If tones are enabled, tapping an invalid card will generate a warble sound
- The key pad, if equipped, should generate a tone after pressing each of the keys

---

Note: The Transact logo located near the bottom right of the reader illuminates when power is supplied to the reader.

TROUBLESHOOTING

Power Indicator is off - If the Power indicator behind the Transact logo remains off when power is applied:	• Verify that the proper voltage is being supplied (TB1-1 = +V, TB1- 2 = GND)
Red annunciator blinking - DR5000 Readers Red annunciator flashes (approximately 1 second rate) when communication is lost with the SA3000 Door Controller Unit. If the Red annunciator is flashing, check the following:	• Verify the SA3000 Controller Unit has been properly configured for Serial Readers. This configuration is made by selecting SE3- CS/ CSPP/RDR100 in the Serial Reader(s) option. Reference the SA3000 Door Access Control System Installation Guide (DOC# 988) in the Controller Unit Configuration (page 28) • If two DR5000 Readers are installed and operating in RS-485 mode, verify one reader has TB2-3 jumpered to TB2-4, verify the wiring between the reader and the Door Controller board in the SA3000 System
No annunciation after card tap - One annunciator always turns on after a contactless card is tapped. If no annunciator turns on, the Reader may have corrupted software or the card may be damaged or not programmed.	• Check software integrity, cycle power to the Reader, the annunciators should turn ON and OFF in sequence, along with four beeps, indicating the Reader has successfully executed its power-up initialization code

If mixing DR5000 and DR4xxx readers in a 2 reader configuration connected to a single Door Controller, one of the readers must always be configured with a jumper. This identifies which reader will answer polls on address 1. The reader choice is arbitrary just as long as only one reader has the jumper.

Table 1-4: Jumper Configuration

Reader	Jumper Position
DR4xxx	TB1-1 to TB1-5
DR5000	TB2-3 to TB2-4

SPECIFICATIONS

Physical Size:	1.45"W x 4.0"H x 0.75"D
Input Power:	6 - 24VDC 1.4W max
Temperature Range:	-35 to +66 Celsius Suitable for indoor and outdoor use
Wiegand Signal Specifications:	Inputs (RED LED, GRN LED, BEEP • 0 - 5.5V maximum • Active when < 2.5V (driver must be able to sink at least 1mA) Outputs (D0, D1, TAMPER): • Open-drain outputs, max sink current 100mA • Internal 10K pullup to 5V • Tamper output polarity is configurable
UL294 Performance Levels:	Line Security: I Attack: I Endurance: IV Standby Power: I