Blackboard
transaction System

LC3000 Laundry System

Installation and Setup Guide

Commerce Suite

Blackboard

The following information applies to wired LC3000 systems equipped with LCM20s only.

Blackboard Inc.	LC3000
FC	Tested To Comply With FCC Standards
FOR HOME OR OFFICE USE	

This Class A digital apparatus complies with
Canadian ICES-003

The following information applies to wireless systems equipped with LWIs and LE3/BRIDGES only.

This device complies with Part 15 of the FCC Rules. Operation is subject to the following two conditions: (1) This device may not cause harmful interference, and (2) this device must accept any interference received, including interference that may cause undesired operation.

Part 15.21: Changes or modifications not expressly approved by the party responsible for compliance could void the user's authority to operate the equipment.

NOTE: The manufacturer is not responsible for any radio or TV interference caused by unauthorized modifications to this equipment. Such modifications could void the user's authority to operate the equipment.

Blackboard Date: 9-9-05 Doc. No.: 1135

Copyright © 2005 Blackboard Inc.® All rights reserved. No part of this publication may be reproduced or used in any form or by any means—graphic, electronic, or mechanical including photocopying, recording, taping, or information storage and retrieval systems—without the express written permission of Blackboard Inc. Information contained in this document is subject to change without notice.

TABLE OF CONTENTS

5 OVERVIEW

8 Laundry System Components

9 Laundry System Installation Overview

10 INSTALL AND CONFIGURE LC3000

10 LC3000 Laundry Reader Installation
11 Install the LC3000 Enclosure

12 LC3000 Laundry Reader Configuration
14 Configure LC3000 Reader Using Front Panel Keyboard
14 Configure LC3000 Reader Using RS-232
15 Configure LC3000 Reader Using Telnet

16 WIRED LAUNDRY MACHINE INTERFACE INSTALLATION

16 LE3/PSENCL and LCM20 Installation
16 Install the LCM20 Board in the LC3000
17 Install LE3/PSENCL (if required)
18 Connect External LCM20 to LC3000 and laundry machines

19 LCI Laundry Machine Interface Installation
19 Install Maytag LCI3010 in Laundry Machine
20 Install Alliance/Speed Queen LCI3020 in Laundry Machine
21 Install Whirlpool LCI3030 in Laundry Machine

23 WIRELESS LAUNDRY MACHINE INTERFACE INSTALLATION

24 Wireless Laundry System Installation Overview
24 Mount the LE3/BRIDGE
25 Configure the LE3/BRIDGE Wireless Module
25 Configure the LWI30XX for Laundry Machines
26 Install the LWI30XX in Laundry Machines

31 APPENDIX

31 Reader Operations
31 Laundry Reader Usage

34 Reader Menus and Settings
34 Manager Card

38 Laundry Component Dimensions and Weight

39 Features

DRAFT

40 Default LC3000 Configuration Settings
40 Restore Default Settings

41 Error Messages (Unix only)

41 Error Messages (windows only)

42 Retrofits
42 MW9010/MW9012 LCR Retrofits (For Wired Laundry Centers only)
42 Danyl Retrofits

42 LC3000 Drill Template

DRAFT

OVERVIEW

This manual provides instructions for selecting, installing, and configuring the Blackboard Laundry System, using the LC3000 Laundry Reader. Recommendations on selecting an installation location are included. Wiring diagrams show you how to connect the LC3000 Laundry System.

The LC3000 Laundry Reader activates and monitors washers and dryers across a laundry center network. The LC3000 is designed to work with the *Blackboard Transaction System (BbTS)* and provides user interface through a display, keypad, and mag-stripe reader. The network connections are 10/100 Base-T or RS-485.

The LC3000 supports new installations for wired or wireless laundry centers. Information for retrofits is available in the **"Appendix"** on page 31.

DRAFT

Wired Solution

The wired solution supports up to 60 laundry machines (see Figure 1 below). In laundry centers with 20 or fewer machines, you only need a single LCM20, which is installed inside the LC3000 enclosure. If your laundry center supports more than 20 machines, a multiplexer (an LCM20) and an enclosure (LE3/PSENCL) are needed for each additional set of 20 laundry machines. The LC3000 reader can support a maximum of three (3) multiplexers.

A machine interface (an LCI), which is a wiring harness that communicates with the laundry machine controller, is connected to a cable within a multiplexer (LCM20). This machine interface must be installed in every laundry machine to facilitate communication between the laundry machines and the LC3000 laundry reader unit. Several models of machine interfaces are available. Use Table 1 (on page 8) to determine the correct machine interface (LCI) model number, based on the manufacturer and model of your laundry machines.

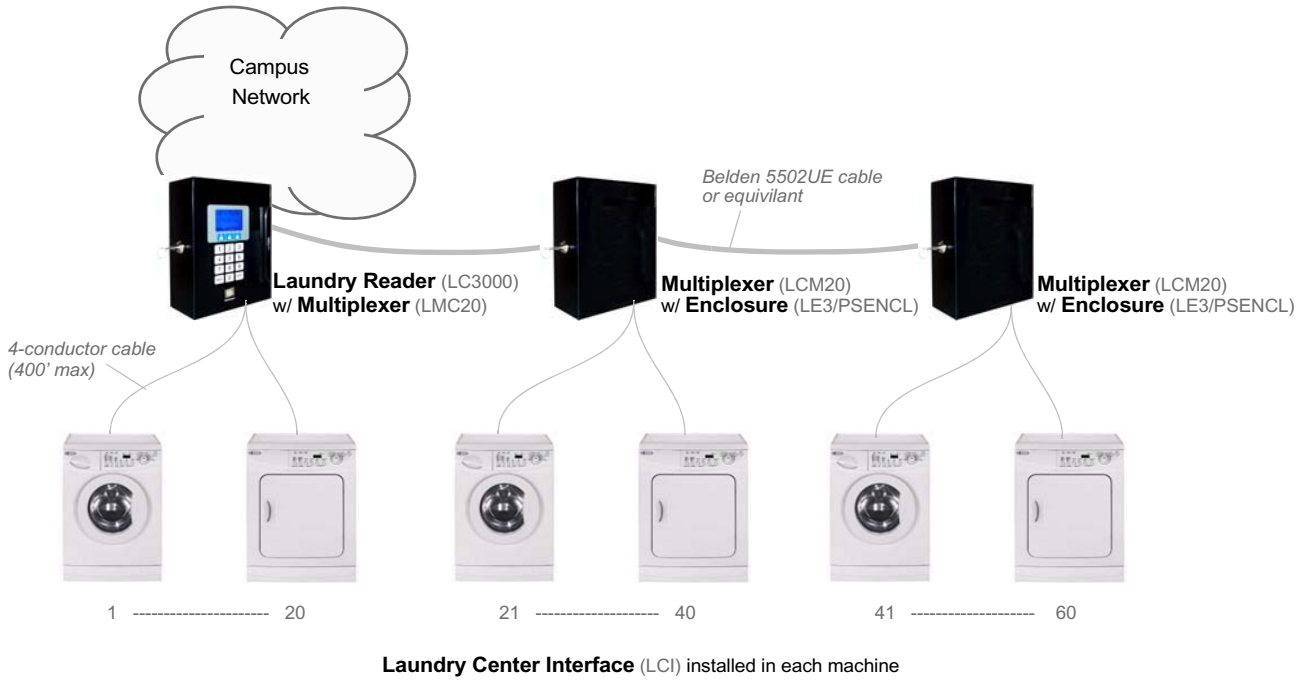

Figure 1: Wired Laundry Center Solution

Wireless Solution

The wireless solution supports up to 60 laundry machines, using a wireless bridge (LE3/BRIDGE). See Figure 2 below.

A laundry wireless interface (LWI) must be installed in every laundry machine to facilitate communication between the laundry machines and the LC3000 Laundry Reader. The LWI includes a Wireless Interface Module and a wiring harness. Several models of LWIs are available. Use Table 1 (on page 8) to select the correct LWI model number based on the manufacturer and model of your laundry machines.

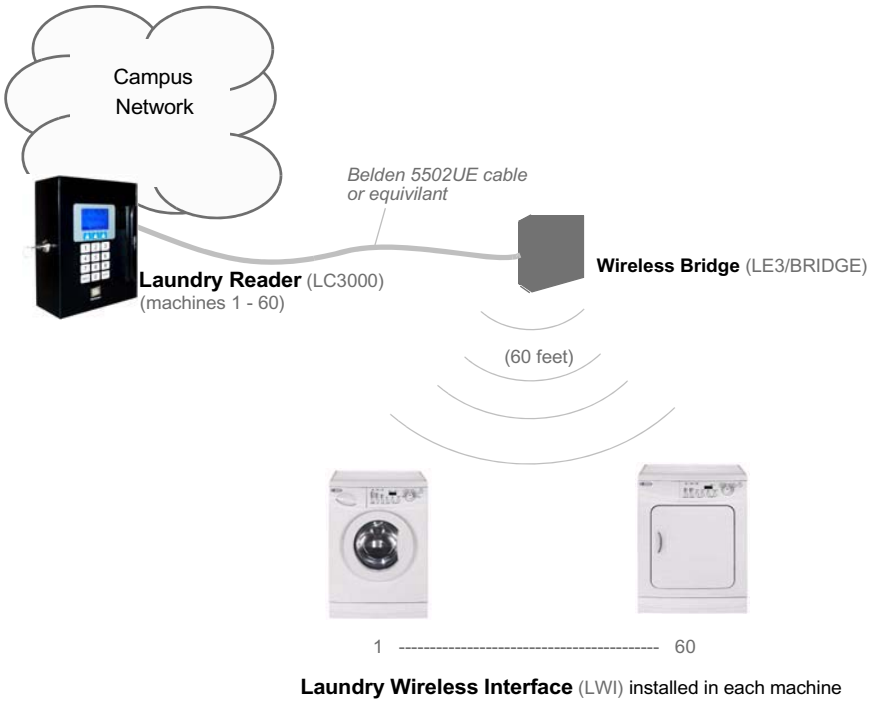

Figure 2: Wireless Laundry Center Solution

LAUNDRY SYSTEM COMPONENTS

Common Component	Wired Interface Components	Wireless Interface Components
Laundry Reader (LC3000): Supports up to 60 machines* using up to 3 Multiplexers (wired); or up to 7 Wireless Bridges (LE3/BRIDGE) per Laundry Reader; up to 60 machines within 60 feet	• **Laundry Multiplexer (LCM20):** 1 per 20 wired machines*; first LCM20 is included in the LC3000 enclosure; second and third LCM20s require LE3/PSENCL. • **Enclosure (LE3/PSENCL):** (power supply/enclosure) 1 per external LCM20.	**Wireless Bridge (LE3/BRIDGE):** 1 per laundry room; up to 7 Bridges per Laundry Reader; and up to 60 machines* can be supported within 60 feet.
	• **Wired Interfaces (LCI)** • ***LCI3010:*** Maytag interface, wired: 1 per machine or complete stacked unit • ***LCI3020:*** Speed Queen interface, wired; 1 per machine or half stacked unit. • ***LCI3030:*** Whirlpool interface, wired; 1 per machine or half stacked unit.	• **Wireless Interfaces (LWI)** • ***LWI3010:*** Maytag interface, wireless; 1 per machine or complete stacked unit. • ***LWI3020:*** Speed queen interface, wireless; 1 per machine or half stacked unit. • ***LWI3030:*** Whirlpool interface, wireless; 1 per machine or half stacked unit.

Table 1: Laundry System Components

** count a stacked unit as two machines*

The Blackboard Laundry System can communicate with most computer-controlled (debit-ready) machines. This System includes the following components:

Laundry Reader (LC3000)

The Laundry Reader is a wall-mounted card reader with a vertical swipe mag-stripe card reader. It includes a 15-key keypad and an LCD display. It features a keyed lock to secure the inside of the unit, along with a hinged door to access the circuit boards.

Laundry Center Multiplexer (LCM20)

The Multiplexer communicates with the LC3000 and controls up to 20 laundry machines. Up to three LCM20 Multiplexers can be connected to an LC3000 to control a maximum of 60 laundry machines. The LC3000 communicates to an LCM20 over an RS-485 bus.

Enclosure (LE3/PSENCL)

External Multiplexers (LCM20s), the 2nd and 3rd Multiplexers connected to an LC3000, require this enclosure for mounting

DRAFT

Laundry Center Interface (LCI)

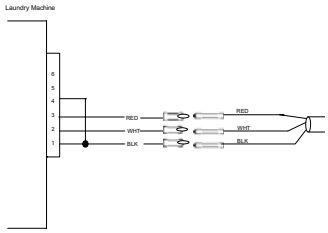

The LCI is a wiring harness that attaches to the control circuitry within the laundry machine. There are several LCI models to support machines from different manufacturers and model types.

Laundry Wireless Bridge (LE3/BRIDGE)

The Bridge provides a wireless connection between the LC3000 and laundry machines. It communicates with the LC3000 over an RS-485 bus and communicates with LWIs within the laundry machines over a wireless network.

Laundry Wireless Interface (LWI)

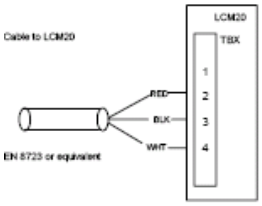

The LWI is a wiring harness installed inside the laundry machine and interfaces with the machine controller. There are several models of LWIs to support machines from different manufacturers and model types.

LAUNDRY SYSTEM INSTALLATION OVERVIEW

1. **Configure BbTS (See System Administrator Guide).**
2. LC3000 Laundry Reader Installation (page 10)
3. LC3000 Laundry Reader Configuration (page 12)
4. Wired Laundry Machine Interface Installation (page 16) or
   Wireless Laundry Machine Interface Installation (page 23)

DRAFT

INSTALL AND CONFIGURE LC3000

LC3000 LAUNDRY READER INSTALLATION

Select a mounting method based on the application and the network mode of the reader. The LC3000 enclosure is designed to mount on a wall: it can be flush-mounted (wiring can come from the interior of the wall); or it can be surface-mounted (wiring can run through conduit on the exterior of the wall).

LC3000 Mounting Location Considerations

Use the following criteria to select the best mounting location for the LC3000:

Connect to 120 VAC @ 60 Hz. Connect only to a 15A maximum branch circuit protection or equivalent. Use a circuit breaker or switch to disconnect power when installing or removing the LC3000.

- *120VAC power availability*
- *Network communications availability (RS-485 or 10/100 Base T)*
- *Wiring distance limitations*

  RS-485 Communications 4000' total per loop

  10/100 Base-T Communications 300'
- *Ease of cable routing to Laundry machines (if wired configuration)*
- *Installation height regulations*

Mounting Requirements

Mounting hardware, .25" appropriate to surface.

DRAFT

Preparing the Enclosure

Before mounting the enclosure, remove all necessary knockouts to route wires and/or attach conduits.

Remove only the knockouts required for your installation.

- All knockouts are dimensioned for 1/2” conduit fittings.

  Flush-mounted enclosure: *If installing a wired laundry center, route machine wires through the “3x3” cutout.*

  Surface-mounted enclosure: *Remove conduit knockouts, located on the top and bottom of the enclosure, to route wire to the laundry machines.*

- The enclosure provides two knockouts, in the upper right, for power.

  Flush-mounted enclosure: *Remove the knockout on the back side.*

  Surface-mounted enclosure: *Remove the knockout on the top.*

Maintain 1/4" separation from AC wiring to other wiring.

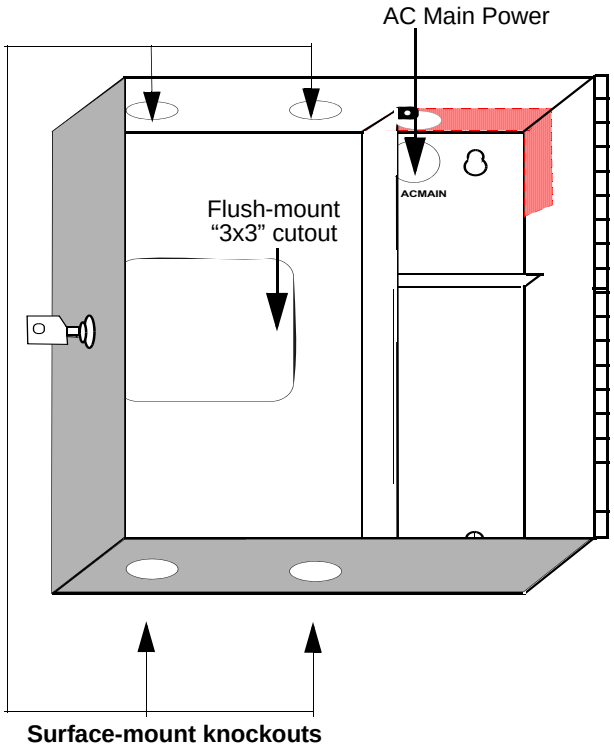

Figure 3: Knockout areas

Install the LC3000 Enclosure

1. Inside the LC3000, remove the power supply cover to access the upper right mounting hole.

   Protect power supply from debris while mounting the enclosure.

2. Secure the enclosure to a wall using hardware appropriate for the wall material.

   Mounting holes accept up to 1/4” hardware.

Disconnect external AC power when installing any wiring.

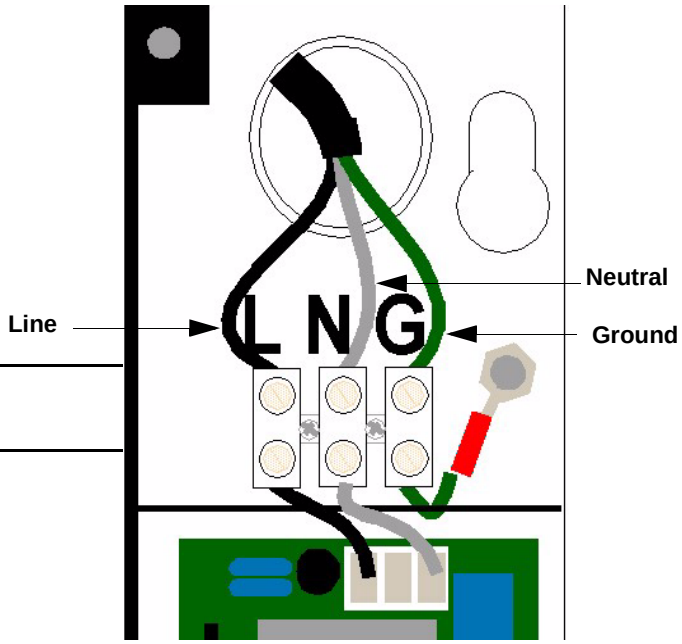

Figure 4: Power Supply Installation

DR

3 Strip back the insulation on the AC wire .28" to prevent bare wire from being exposed when installed in the AC terminal block.

4 Install the appropriate wires into the AC terminal block, as shown in **Figure 4**, tighten the screws to 5 - 7 in-lbs., and replace power supply cover.

Ensure all 120VAC wiring is confined within the power supply compartment when the cover is reinstalled to maintain UL compliance.

---

5 Reconnect external AC power.

Maintain 1/4" separation from AC wiring to other wiring.

---

6 Connect to Network.

The LC3000 board provides both 10/100 Base-T TCP/IP and RS-485 network connections for communications with the BbTS (NP, Network Processor). Select a connection based on the local network.

Once you connect the LC3000 to the network, configure the LC3000 for the network. Refer to the **LC3000 Laundry Reader Configuration** *(page 13) for details on configuring the unit.*

LC3000 LAUNDRY READER CONFIGURATION

Configuration Methods

The Laundry Reader must be configured to interface with the BbTS network. Configure the Reader using either the front panel of the Reader or the configuration port (see **Figure 5: LC3000 Laundry Reader Configuration** (page 13). Future configuration modifications can be one using Telnet, if enabled.

Default Settings

The LC3000 Controller Unit default settings are:

- DHCP enabled
- NP (host) IP address assigned by DHCP server

Configure the LC3000 Laundry Reader to interface with BbTS, using one of three modes:

- **Front Panel Keyboard**
- **Config Port -** provides for RS-232 connection to a computer with Hyperterminal software
- **Telnet** via IP if using Ethernet connections

DRAFT

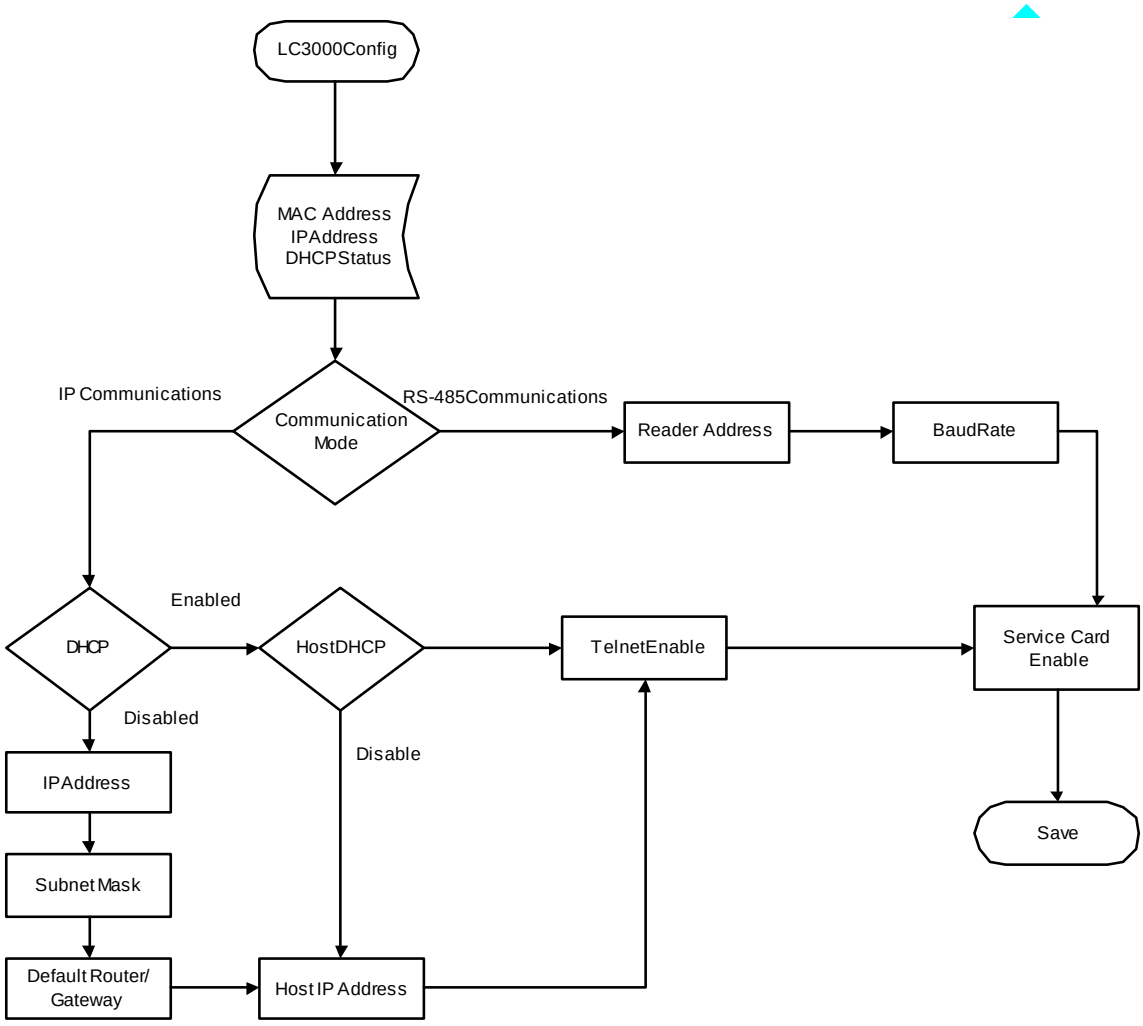

Figure 5: LC3000 Laundry Reader Configuration

Configure LC3000 Reader Using Front Panel Keyboard

1. Swipe the specially encoded service card and press the **NEXT** key on the terminal to start the configuration process.
2. Adjust each of the setup parameters, as appropriate, using the keys displayed on the Terminal.
   - **ACCEPT** - Accept displayed value and advance to next setting.
   - **CHANGE** - Change displayed value.
   - **ABORT** - Abort configuration process.

   To update the IP address and related information, press the CHANGE key when the parameter is displayed; then type in the number using zeroes (0) as placeholders.
3. Press SAVE when prompted to save the new settings and reboot the terminal.

   The terminal may be offline for several minutes until it resynchonizes with the Host.

An asterisk (*) displayed in the second to the last position of the first line indicates the terminal is offline.

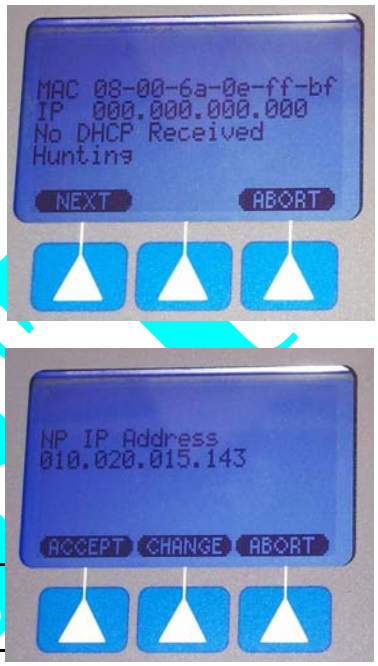

Figure 6: Front panel configuration menus

Configure LC3000 Reader Using RS-232

1. Connect a cable from a computer's serial port to labelled "RS-232 CONFIG".

   Cable connections are shown in Table 2.
2. Open a terminal program (such as Hyperterminal) and establish connection settings:
   - 9600 baud
   - 1 stop
   - no parity
   - no flow control
3. Log in using the default password: **IPrdr4U**.

   The password is case sensitive. Consider changing the password.

```
Blackboard LC3000 Configuration

Enter Password > *******

LC3000

Command Reference -

   config          - Configure master controller parameters
   showconfig      - Display master controller parameters
   door            - Configure door controller parameters
   showdoor        - Display door controller parameters
   status          - Display reader status
   ping <ip_addr>  - Ping another IP device
   netstats        - Display network statistics
   netclear        - Clear network statistics counters
   password        - Change config utility password
   ipreboot        - Reboot reader
   exit            - Log out of session

Type command, followed by 'Enter' key >
```

IPrdr4U

Figure 7: Controller Configuration Menu

4. At the prompt, type the following command and press **Enter** to start configuration:

   config *to configure the LC3000. Refer to* **Figure 5: LC3000 Laundry Reader Configuration** *(page 13), LC3000 Laundry Reader Configuration.*
5. Disconnect cable from RS-232 CONFIG.

Other commands are available on the menu (see **Figure 7***).*

DRAFT

Table 2: RS-232 Config Port Connection

LC3000 Reader (RJ-12)	PC Serial Port DB9 Connector	Signal
Pin 1	Pin 5	Ground
Pin 3	Pin 3	Receive (RX)
Pin 4	Pin 2	Transmit (TX)

Configure LC3000 Reader Using Telnet

1. Open a Telnet session to the LC3000 Reader's IP address.
2. Log in using the default password: **IPrdr4U**.

   The password is case sensitive. Consider changing the password.
3. At the prompt, type the following command and press **Enter** to start configuration:

   config *to configure the LC3000. Refer to* **Figure 5: LC3000 Laundry Reader Configuration** *(page 13),LC3000 Laundry Reader Configuration.*

Other available commands are displayed on the menu (see **Figure 7** *on page 14).*

Forget your password? Refer to Restore Default Settings on page for details.

Now, you are ready to install the machine interface components. Based on your network selection, refer to one of the following sections:

- **Wired Laundry Machine Interface Installation** (page 16)
- **Wireless Laundry Machine Interface Installation** (page 23)

DRAFT

WIRED LAUNDRY MACHINE INTERFACE INSTALLATION

The wired solution supports up to 60 laundry machines. In laundry centers with 20 or fewer machines, a single LCM20 is installed inside the LC3000 enclosure. If your Laundry Center supports more than 20 machines, you must purchase an LCM20 and an LE3/PSENCL for each additional set of 20 machines. The LC3000 reader can support a maximum of three (3) LCM20s. An LCI, which includes a wiring harness that communicates with the laundry machine controller, must be installed in every laundry machine and is attached to a cable connected to the LCM20.

Two 5-pin lead sets exit from the power supply compartment.

In the LC3000, the longer lead set connects to the LC3000 controller board on the door of the enclosure; the shorter lead set connects to the LCM20 board. Do not connect the lead set to the LCM20 board until all connections have been made to machines.

LE3/PSENCL AND LCM20 INSTALLATION

LE3/PSENCL and LCM20 Placement

Consider the following criteria before you place the external LCM20 and LE3/PSENCL:

- 120VAC power availability
- Wiring distance limitation of 400' from Laundry Reader (LC3000) or Multiplexer (LCM20) to the laundry machines
- Ease of cable routing to laundry machines

Install the LCM20 Board in the LC3000

1. With the enclosure door open, position the LCM20 board, with component side facing out (see Figure 7).
2. Secure the LCM20 board using the #4-40 screws from the hardware kit.

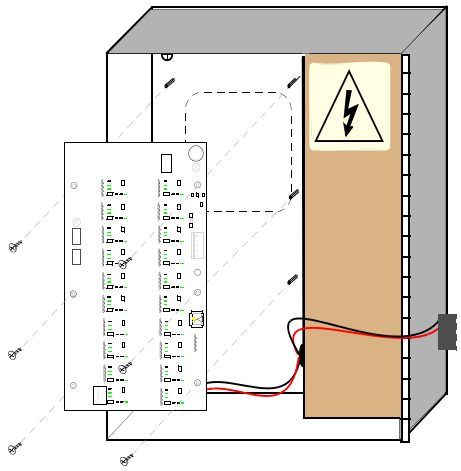

Figure 7: LCM20 Board in the LC3000 Enclosure

DRAFT

3 Set the rotary address switch to position 0. Refer to Figure 8.

4 Connect LCM20 to the LC3000 Reader, using the provided RJ 45 communication cable.

5 Route 4-conductor cables from each LCM20 terminal block to a laundry machine (see Figure 9 below).

6 Consider marking each cable uniquely for easy identification.

Do not connect power to the LCM20 Board until all machine interfaces are terminated.

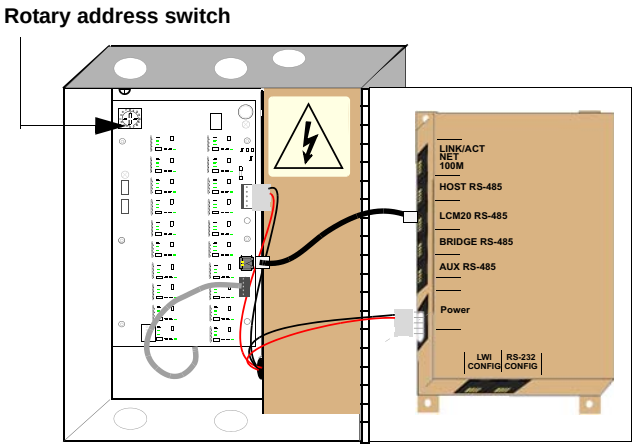

Figure 8: LCM20 Board Placement

Install LE3/PSENCL (if required)

If your Laundry Center has more than 20 machines, an external LCM20 and LE3/PSENCL are required.

1 Inside the LE3/PSENCL, remove the power supply cover to access the upper right mounting hole.

Protect power supply from debris while mounting the enclosure.

2 Secure the enclosure to a wall using hardware appropriate for the wall material.

Mounting holes accept up to 1/4" hardware.

Disconnect external AC power when installing any wiring.

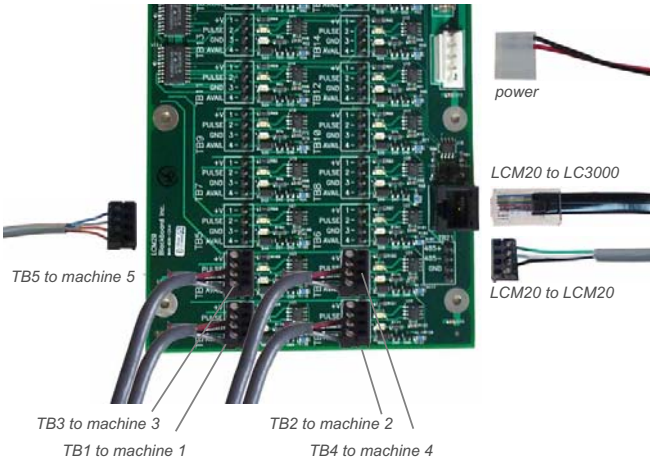

Figure 9: LCM20 Connections

Ensure all 120VAC wiring is confined within the power supply compartment when the cover is reinstalled to maintain UL compliance.

3 Strip back the insulation on the AC wire .28" to prevent bare wire from being exposed when installed in the AC terminal block.

DRAFT

4 Install the appropriate wires into the AC terminal block, as shown in Figure 10, tighten the screws to 5-7 in-lbs.,and replace power supply cover.

5 Position the LCM20 board, with component side facing out, over the six standoffs.

6 Secure the LCM20 board using the #4-40 screws from the hardware kit.

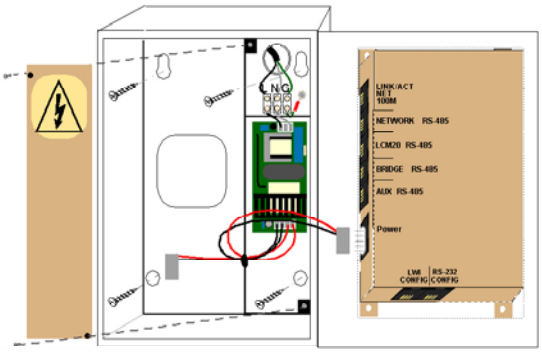

Figure 10: LCM20 Board and LE3/PSENCL Connections

Connect External LCM20 to LC3000 and laundry machines

1 Set the rotary address switch to position 1 or 2.

Position 1 for machine numbers 21 through 40; and position 2 for machine numbers 41 through 60. Refer to **Figure 8: LCM20 Board Placement** *(page 17)*.

2 Route an RS-485 communication cable from external LCM20 to internal LCM20 mounted inside the LC3000 enclosure.

Refer to **Figure 11** *for cable termination.*

3 Route a 4-conductor cable from each laundry machine to an LCM20 terminal block (TB1 - TB20).

Consider marking each cable uniquely for easy identification.

Do not connect power to the LCM20 Board until all machine interfaces are terminated.

Maintain 1/4" separation from AC wiring to other wiring.

4 Install and connect to machine interfaces (LCIs).

The machine interface (LCI) wiring varies depending on the type of machine. Refer to appropriate LCI installation section:

- **Install Maytag LCI3010 in Laundry Machine** (page 19)
- **Install Alliance/Speed Queen LCI3020 in Laundry Machine** (page 20)
- **Install Whirlpool LCI3030 in Laundry Machine** (page 21)

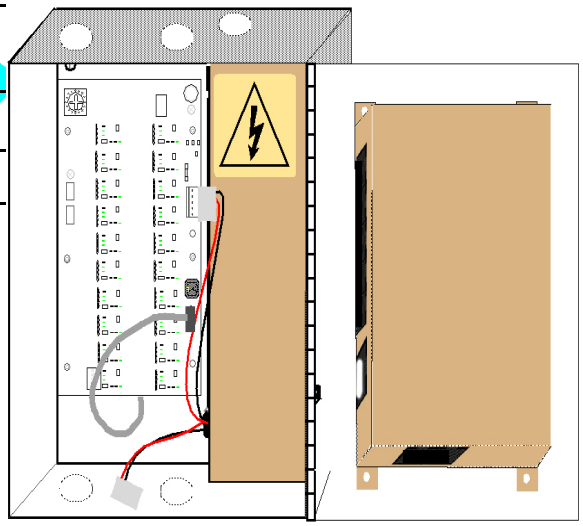

Figure 11: External LCM20 Terminal Connections

5 Once all LCI wiring harnesses are installed in laundry machines and cables are terminated on the LCM20, reconnect power.

DRAFT

LCI LAUNDRY MACHINE INTERFACE INSTALLATION

Install an LCI in every laundry machine. An LCI consists of a wiring harness that interfaces with the laundry machine controller and is attached to a cable connected to the LCM20. Several models of LCI are available. Use Table 1: Laundry System Components, on page 8 to select the correct LCI model number based on the manufacturer and model of your laundry machines.

Wiring harness (LCI) connects under machine controller and describes the blocks.

Install Maytag LCI3010 in Laundry Machine

The hardware kit includes machine controller interface cables, splices, and wire ties. Two cables are included to support both single machines and stacked dryers. If you are installing a single machine, discard the two-wire cable.

1. Remove the operator console (with display and switches) from the machine (only the screws in the top two corners need to be removed).
2. Route the 4-conductor cable from the LCM20 into the laundry machine for connection to the LCI wiring harness.

To prevent tampering, flexible metal conduit is recommended to run the 4-conductor cable from LCM20 to the back of the machine. If flexible metal conduit is not used, then a strain relief must be used to prevent damage to the cable.

---

3. Attach female bullet connectors from the hardware kit to the end of the 4-conductor cable.

   Use a strain relief or other means to secure the cable where it enters the machine.
4. Insert the female bullet connectors into the LCI3010 wiring harness (white to white, black to black, etc.).

   (See **Figure 12**.)

   If the installation is for a stacked machine, the additional two-wire harness must be connected.
5. Install the LCI wiring harness by inserting the six-pin Molex into the connector of the laundry machines circuit board.

   *(See **Figure 13**.)*
6. Use the wire ties and wire tie blocks included in the hardware kit to dress the wires.

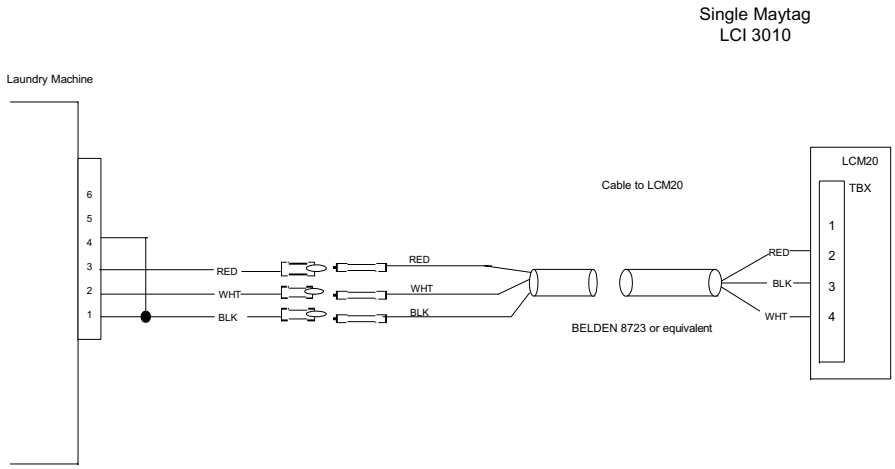

Figure 12: Single Maytag Machine

DRAFT

7 Terminate 4-conductor cable at the LCM20, using the 1 x 4 terminal block provided in the hardware kit.

Refer to **Figure 9: LCM20 Connections** *(page 17).*

8 Replace laundry machine operator console.

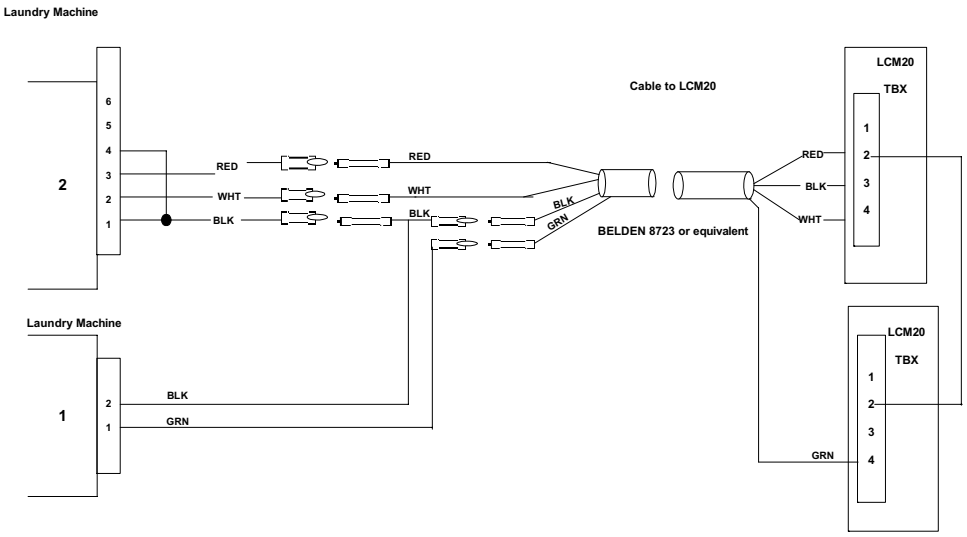

Figure 13: Maytag Stacked Machine

Depending on the labeling of upper and lower dryers and Maytag control board software version, pins may need to be swapped to correctly match available signal with machine identifier.

Install Alliance/Speed Queen LCI3020 in Laundry Machine

The hardware kit includes a machine controller interface cable, splices and wire ties. Two LCI3020s must be ordered when wiring to a stacked dryer.

1 Remove the operator console (with display and switches) from the machine.

Refer to the appropriate Speed Queen service manual.

2 Route the 4-conductor cable from the LCM20 into the machine (see **Figure 14**).

If the installation is for a stacked machine, two cables are required.

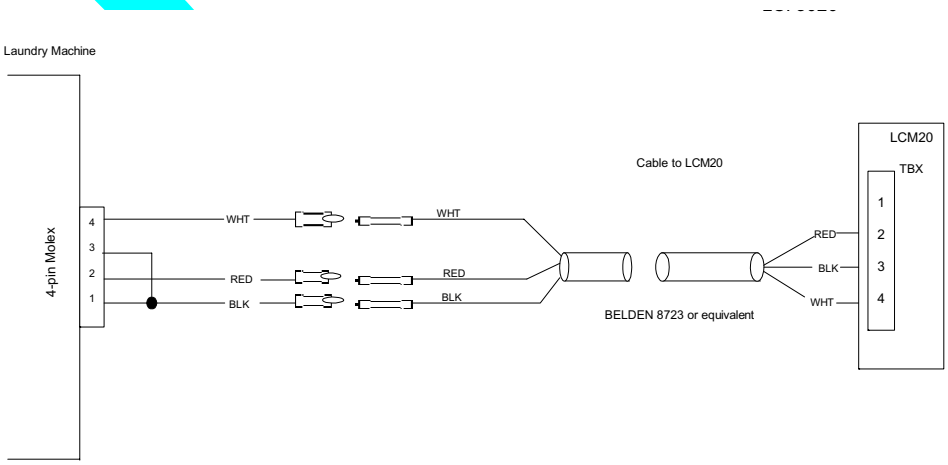

Figure 14: Alliance/Speed Queen Machine

DRAFT

To prevent tampering, flexible metal conduit is recommended to run the 4-conductor cable from LCM20 to the back of the machine. If flexible metal conduit is not used, then a strain relief must be used to prevent damage to the cable.

3 Attach female bullet connectors from the hardware kit to the end of the 4-conductor cable.

Use a strain relief or other means to secure the cable where it enters the machine.

4 Insert the female bullet connectors into the LCI3020 wiring harness (white to white, black to black, etc.).

If the installation is for a stacked machine,perform the same process on the second cable.

5 Insert the four-pin Molex connector into the circuit board, as illustrated in **Figure 14**.

If the installation is for a stacked machine, insert the second four-pin Molex connector into the circuit board.

6 Use the wire ties and wire tie blocks included in the hardware kit to dress the wires.

7 Terminate 4-conductor cable at the LCM20, using the 1 x 4 terminal block provided in the hardware kit; and install the terminal block on the terminal header of the LCM20.

Refer to **Figure 9: LCM20 Connections** *(page 17).*

8 Replace laundry machine operator console.

Install Whirlpool LCI3030 in Laundry Machine

The hardware kit includes a machine controller interface cable, splices, and wire ties. You will need to have two LCI3030s on hand when wiring to a stacked dryer.

1 Remove the operator console (with display and switches) from the machine.

Refer to appropriate service manual.

2 Route the 4-conductor cable from the LCM20 into the machine.

If the installation is for a stacked machine, route two cables.

To prevent tampering, flexible metal conduit is recommended to run the 4-conductor cable from LCM20 to the back of the machine. If flexible metal conduit is not used, then a strain relief must be used to prevent damage to the cable.

3 Attach female bullet connectors from the hardware kit to the end of the 4-conductor cable.

Use a strain relief or other means to secure the cable where it enters the machine.

4 Insert the female bullet connectors into the LCI3030 wiring harness (white to white, black to black, etc.).

If the installation is for a stacked machine, the additional two-wire harness must be connected as shown in **Figure 15: Whirlpool/Advantech Machine** *(page 22)***.** *You must also insert the second four-pin Molex connector into the circuit board.*

DRAFT

5 Attach the orange wire with the female disconnect to the spade lug on the controller board identified with the letter **M1**.

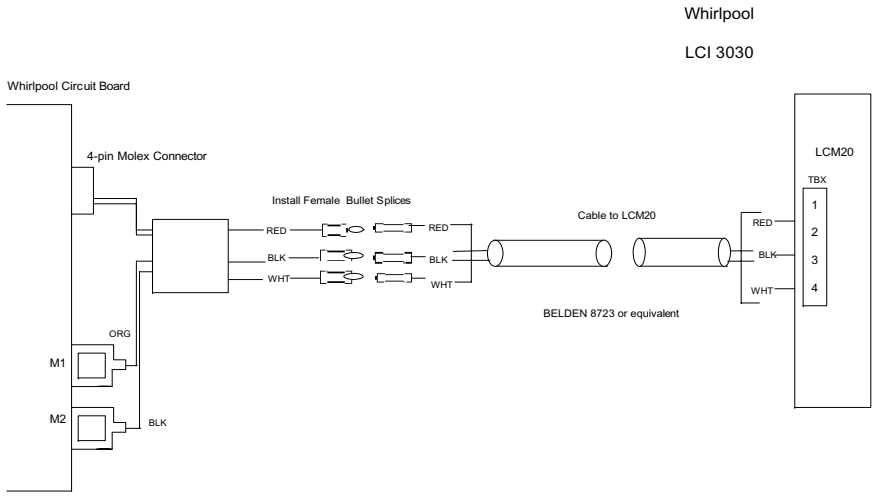

Figure 15: Whirlpool/Advantech Machine

6 Attach the black wire with the female disconnect to the spade lug on the controller board identified with the letter **M2**.

7 Connect the 4-pin Molex connector from the wiring harness to the mating connector on the laundry machine controller board identified as **COIN #1**.

8 Use the wire ties and wire tie blocks, included in the hardware kit, to dress the wires.

9 Terminate 4-conductor cable at the LCM20, using the 1 x 4 terminal block provided in the hardware kit; and install the terminal block on the terminal header of the LCM20.

Refer to **Figure 11: External LCM20 Terminal Connections** *(page 18). Be sure terminal block numbers match laundry machine numeric identifiers.*

10 Replace laundry machine operator console.

DRAFT

WIRELESS LAUNDRY MACHINE INTERFACE INSTALLATION

A wireless laundry center can support up to 60 laundry machines (see Figure 2 on page 7). The configuration uses a Wireless Bridges (LE3/BRIDGE) to connect to the LC3000 Reader and Laundry Wireless Interface (LWI30XX) installed in each laundry machine. THe LE3/BRIDGE and LWI30XX communicate over an RF radio link, eliminating the need for wiring between the reader and laundry machines. The Wireless Laundry System components are listed and explained below.

Wireless Bridge (LE3/BRIDGE)

An LE3/BRIDGE includes a Wireless Interface Module, an enclosure, and a cable, as shown in Figure 16. The Bridge accepts commands from the LC3000 over RS-485 and communicates to LWI30XXs installed in the laundry machines.

Laundry Wireless Interface (LWI30xx)

An LWI30XX includes a Wireless Interface Module and a wiring harness (see Figure 17: Wireless Interface Module and Wiring Harness (page 24). The wiring harness connects the Wireless Interface Module to the control board of the laundry machine. Before your installation, select the appropriate LWI30XX model number based on the manufacturer and model number of each laundry machine (see Table 1: Laundry System Components, on page 8).

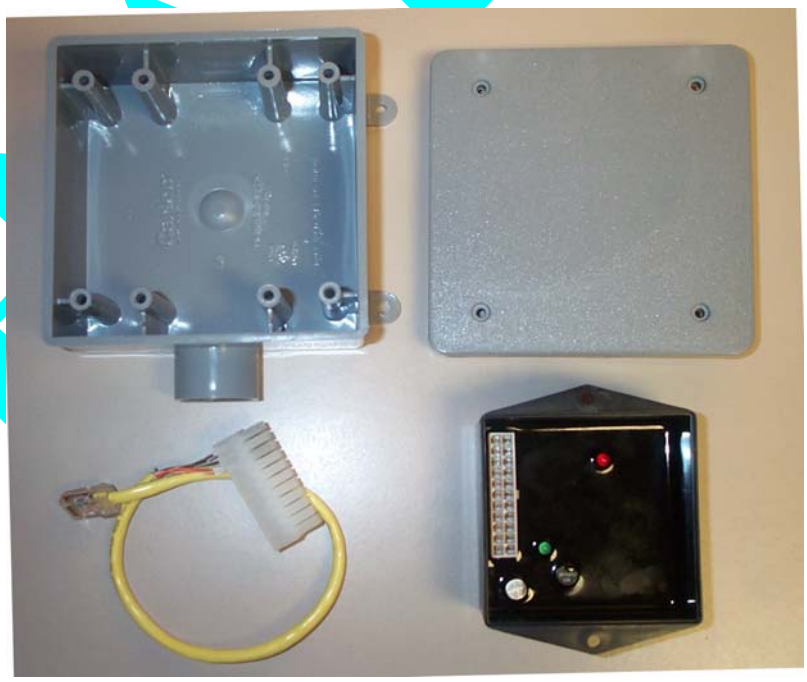

Figure 16: Wireless Bridge component (LE3/BRIDGE)

DRAFT

WIRELESS LAUNDRY SYSTEM INSTALLATION OVERVIEW

You must configure the laundry machines on the host system and download to the LC3000 reader before you configure hardware to the laundry center.

1. **Mount the LE3/BRIDGE** (page 24)
2. **Configure the LE3/BRIDGE Wireless Module** (page 25)
3. **Configure the LWI30XX for Laundry Machines** (page 25)
4. **Install the LWI30XX in Laundry Machines** (page 26)

LE3/BRIDGE Placement

A plastic enclosure is provided with the LE3/BRIDGE. The enclosure is used to house the Wireless Interface Module and must be mounted externally from the LC3000. Use the following criteria to select the appropriate placement:

- Mount in centrally located area to minimize distance to any laundry machine.
- Mount on ceiling or elevated location to increase range.
- Avoid locations near metal objects.
- Avoid having obstructions or barriers between the LE3/BRIDGE and laundry machines.

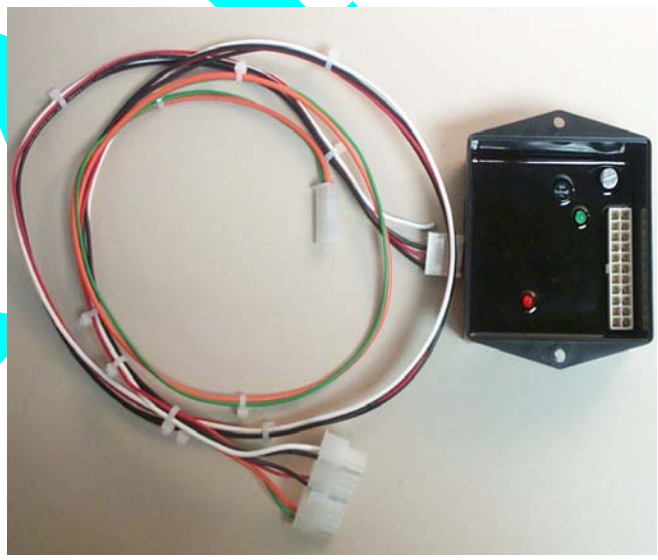

Figure 17: Wireless Interface Module and Wiring Harness

DRAFT

Mount the LE3/BRIDGE

The LE/3 BRIDGE must be mounted external to the LC3000.Select the appropriate hardware and mount the LE3/BRIDGE plastic enclosure.

1. Install 3/4” PVC conduit from the LC3000 to the LE3/BRIDGE enclosure.
2. The LE3/BRIDGE includes a wiring harness with an RJ-45 connector and 22-pin Molex connector.

   The 22-pin connector plugs into the wireless module. The RJ-45 connector must be connected to the RJ-45 jack identified as BRIDGE RS-485 on the LC3000. Connection between the two requires installing a patch cable and using an RJ-45 inline coupler. Pull a patch cable (CAT5) through the conduit and install the inline coupler. Connect the LE3/BRIDGE wiring harness to the inline coupler.

Configure the LE3/BRIDGE Wireless Module

A network ID must be assigned to the LE3/BRIDGE. Since the LC3000 can support multiple LE3/BRIDGES, the network ID identifies which LE3/BRIDGE will respond to a poll. A network ID is also assigned to each LWI30XX installed in a laundry machine, allowing it to respond to a specific LE3/BRIDGE.

Network ID numbers range from 1 through 7. Always select a Network ID that has not been chosen on a nearby network or previously assigned to an additional LE3/BRIDGE attached to the same LC3000. A nearby network is considered any installation that exists within the same building and/or less than 500 feet away.

1. Plug the RJ-45 connector from the patch cable connected to the LE3/BRIDGE wireless module into the RJ-45 jack of the LC3000, labeled “LWI CONFIG” (see Figure 18).

   The LC3000 will request a network ID.

2. Enter a number from 1 to 7 to assign to the LE3/BRIDGE.

   The LC3000 will request a configuration type: BRIDGE or LWI.

3. Select BRIDGE as the configuration type.
4. Remove the RJ-45 connector from the LWI CONFIG jack of the LC3000 and re-install the RJ-45 connector into the RJ-45 jack labeled “BRIDGE RS-485. The LE3/BRIDGE is now operational.

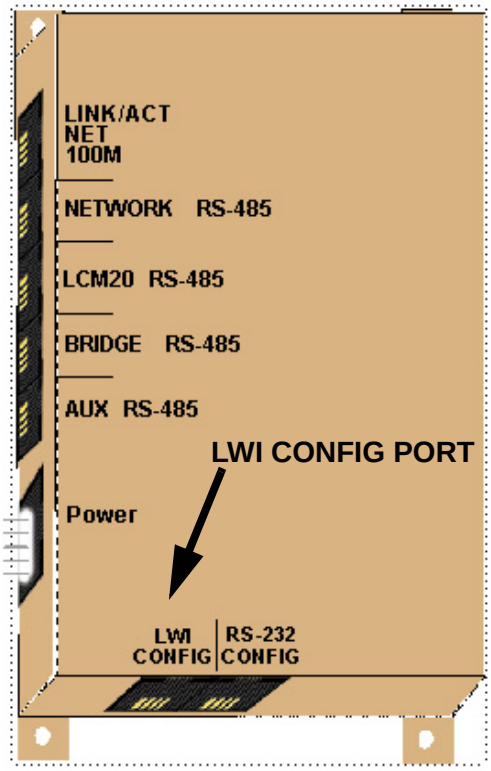

Figure 18: LWI Config Port on LC3000

Configure the LWI30XX for Laundry Machines

Every LWI30XX must be configured before installing it into a laundry machine. The configuration process assigns a network ID and machine number to each LWI30XX and records a unique ID number stored within the wireless module. A label, provided with each LWI30XX, should be placed on the plastic enclosure. Record the assigned machine number and network ID on the label. This ensures the correct LWI30XX module is installed into the assigned laundry machine.

All laundry machines within the laundry center must be assigned a number between 1 and 60. The LC3000 displays this number during normal operation and uses it to determine which LWI30XX module receives a pulse command when a patron selects a specific machine. When configuring the LWI30XX, enter this number when assigning a machine.

1. Plug the configuration cable, provided with the LC3000, into the RJ-45 jack labeled “LWI CONFIG on the LC3000 (see Figure 18).
2. Plug the 22-pin connector of the configuration into an LWI30XX.

   The software requests the Wireless Interface Module type.

3. Select 1 for LWI.

   The software requests the laundry machine ID number (1 through 60).

4. Enter the laundry machine number where the LWI30XX will be installed.
5. Disconnect the LWI30XX module from the configuration cable.
6. Record the network ID and laundry machine number on the label and affix it to the plastic housing of the LWI30XX.

   Repeat the steps listed above for each LWI30XX that will be installed within the laundry center.

DRAFT

When configuring an LWI for a stacked dryer unit, enter the odd number for the lower half of the stack dryer. The LC3000 will internally configure the upper (even-numbered) half of the stack dryer unit. For example, a Maytag Stack Dryer, labelled as machines 3 and 4, lower and upper halves respectively, would specify machine number 3 as the half requiring configuration.

Install the LWI30XX in Laundry Machines

Before installing the LWI30XX inside a laundry machine, the module must be configured (see **Configure the LWI30XX for Laundry Machines** (page 25)). Verify the completion of this step before attempting to install the LWI30XX. Also ensure the machine number assigned to the LWI30XX during the configuration process matches the number assigned to the laundry machine. The machine number should be recorded on the label of the LWI30XX wireless module.

For any installation, either the hood or front panel of the laundry machine must be removed to gain access to the electronic control board. Consult the manufacturer's manual for steps to perform this task. Each LWI30XX contains a wiring harness for connecting the wireless module to the laundry machine's control board. All wiring harnesses support both single and stacked machines. When performing an installation for a single machine, some connectors may not be used.

In a typical installation, the wireless module can be installed inside the machine. However, if the laundry machine is more than 50 feet from the LE3/BRIDGE, it may be necessary to mount the module on the outside of the laundry machine for best reception. Sheet metal screws are provided with the LWI30XX to attach the module.

DRAFT

Installing LWI3010 in Maytag Laundry Machines

Maytag laundry machines require an LWI3010. A single LWI3010 supports both single washer/dryer machines and stacked dryer machines.

Disconnect all power to the machine.

---

1 Remove the operator console (with display and switches) from the machine. For single machines, only remove the top two screws. On stacked machines, only remove the lower two screws on the top panel.

The wiring harness supports both single machines and stacked dryers. Therefore, only a single LWI3010 is needed for either configuration.

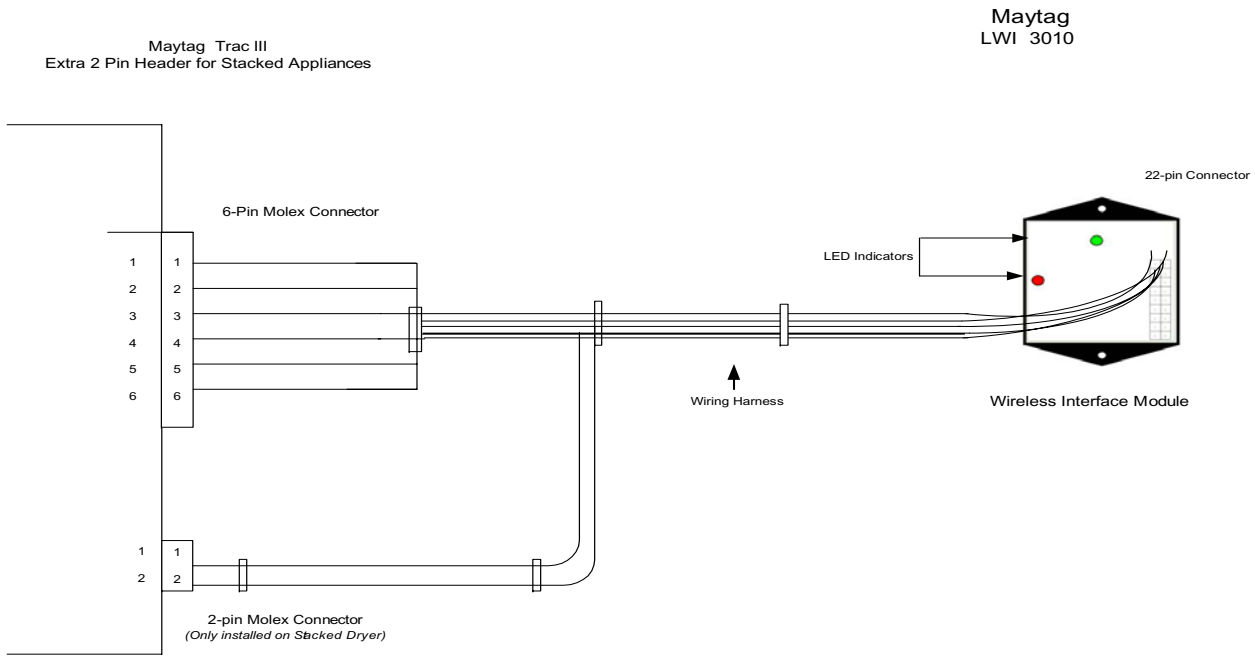

Figure 19: Maytag Machine

2 With access to the machine's control board, install the six-pin connector of the wiring harness into the (AA3) connector of the laundry machine's control board. On stacked machines, install the 2-pin Molex connector on the wiring harness into the control boards (AA2) connector. See Figure 19.

3 Install the 22-pin connector of the wiring harness into the LWI3010 wireless module.

4 Mount the wireless module inside the hood compartment using the double-sticky tape provided, or install the module on the outside of the machine using the sheet metal screws.

If installing inside the hood compartment, keep the module away from the control board and any potential electrical interference sources.

5 Use the wire ties and wire tie blocks included with the LWI3010 to dress the wires within the compartment.

6 Re-install the operator console on the machine.

Installing LWI3020 in Alliance/Speed Queen Laundry Machines

Alliance/Speed Queen laundry machines require an LWI3020. A single LWI3020 supports both single washer/dryer machines and stacked dryer machines. Before installing an LWI3020, verify that the transformer in the machine is the correct type. The transformer should have 4 red wires on the secondary side. If there are only 2 wires, then the transformer must be replaced.

If the 4th alphanumeric digit is A,C, D, F, H, J, L, X, or Y you have the correct dual transformer. If the 4th alphanumeric digit is B, T, or Z, you must have the existing transformer replaced. The correct transformer can be ordered from Alliance Laundry Systems or through your laundry supplier. The correct transformer part number is 201375P.

Disconnect all power to the machine.

---

1. Remove the operator console (with display and switches) from the machine. For single machines, remove only the top two screws.
2. With access to the machine's control board, install the 4-pin connector of the wiring harness labeled "Odd Numbered Machine" onto the (H5) connector of the laundry machine's control board. The H5 connector may be either 4 or 7 pin. If the connector has 7 pins, the connector must be installed on pins 1 through 4.

   When installing the LWI3020 into a stacked machine, the connector identified with label "Even Numbered Machine" must be installed into the control board of the even-numbered machine. For example, if the stacked machine is assigned machines 3 and 4 within the laundry center, then the connector would be installed in the control board identified as machine 3 and the other connector would be installed in the control board of the machine identified as machine 4.
3. Install the 2-Molex pins connected to the RED and RED wires on the wiring harness into the two open positions of the transformer's secondary output connector. It is an AC output, therefore the pins are interchangeable (see **Figure 20: Alliance/Speed Queen Machine** (page 29)).

DRAFT

4 Install the 22-pin connector of the wiring harness into the LIW3020 wireless module.

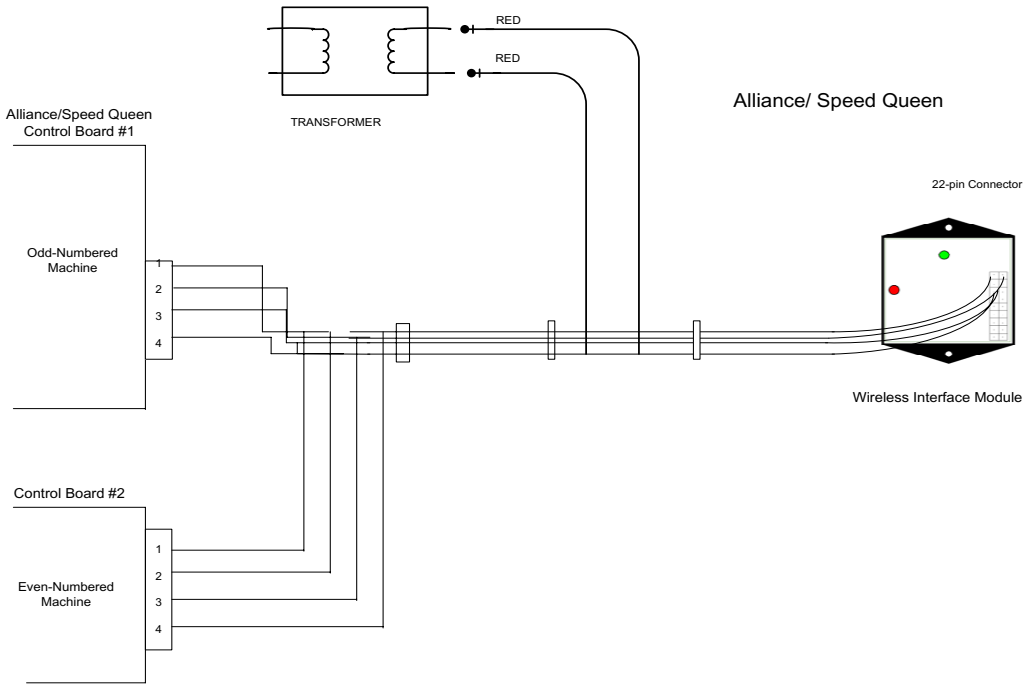

Figure 20: Alliance/Speed Queen Machine

5 Mount the wireless module inside the hood compartment using the double-sticky tape provided or install the module on the outside of the machine, using the sheet metal screws.

If installing inside the hood compartment, keep the module away from the control board and any potential electrical interference sources.

6 Use the wire ties and wire tie blocks included with the LWI3020 to dress the wires within the compartment.

7 Re-install the operator console on the machine.

Install Whirlpool/Advantech LWI3030 in Laundry Machines

Whirlpool/Advantech laundry machines require an LWI3030.

Disconnect all power to the machine.

Refer to the appropriate service manual to remove the control hood cover and gain access to the controller board in the laundry machine.The wiring harness supports both single machines and stacked dryers. Therefore, only a single LWI3030 is needed for either configuration.

1 Attach the orange wire with the female disconnect to the spade lug on the controller board identified with the letter **M1** (see Figure 21).

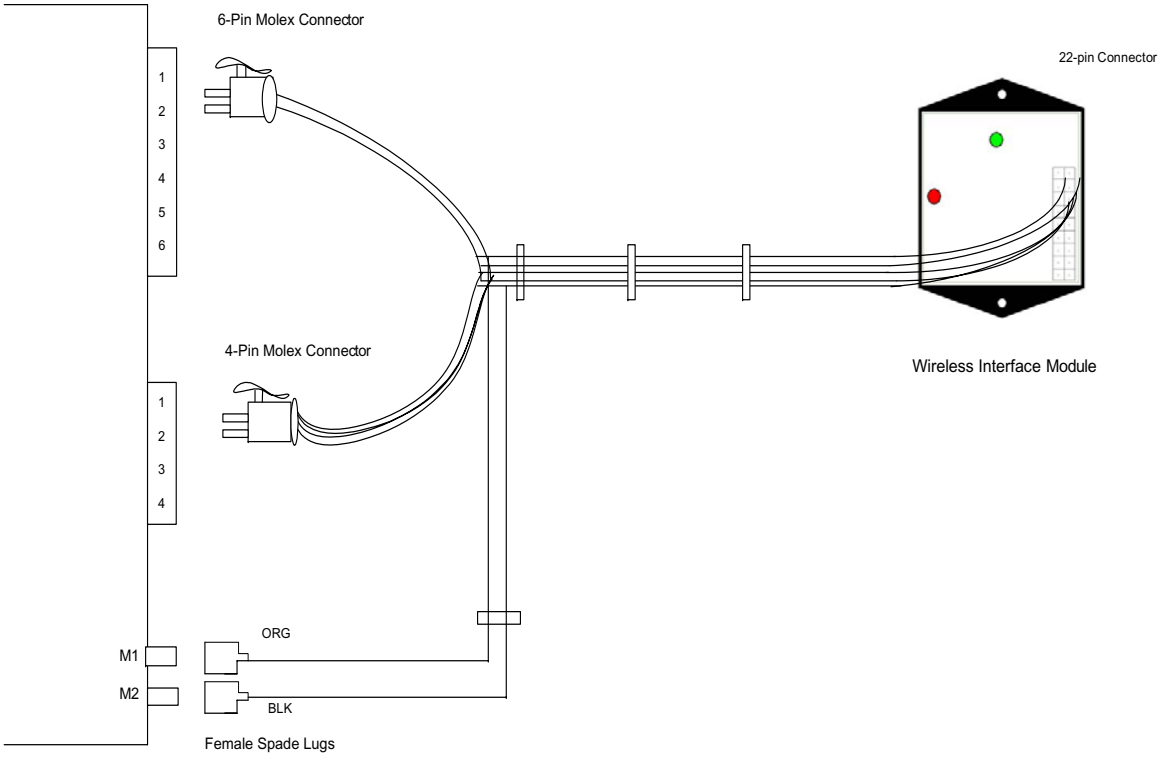

Figure 21: Whirlpool/Advantech Machine

2 Attach the black wire with the female disconnect to the spade lug on the controller board identified with the letter **M2** (see).

3 Connect the 4-pin connector from the wiring harness to the mating connector on the laundry machine controller board.

4 Connect the 6-pin connector from the wiring harness to the mating connector on the laundry machine controller board.

5 Mount the Wireless Interface Module using double-sticky tape or the two-sheet metal screws from the hardware kit.

Select a location near an outer panel and away from any heat source. The location must not exceed the reach of the wiring harness (3 ft.). The LWI should be orientated vertically to get maximum range from the RF transceiver.

6 Plug the 22-pin Molex connector into the LWI.

7 Use the wire ties and wire tie blocks included in the hardware kit to dress the wires.

DK

APPENDIX

READER OPERATIONS

Laundry Reader Usage

The LC3000 Laundry Reader displays online messages to offer a cardholder instructions on the use of the laundry machines. The system toggles back and forth with the following messages:

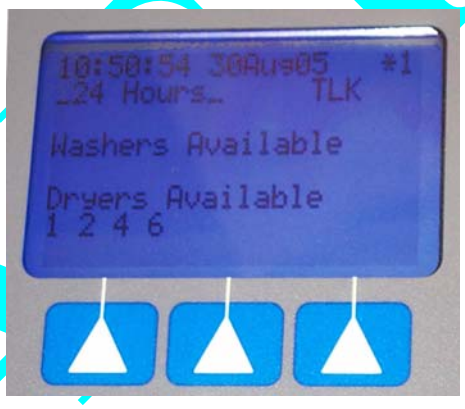

Figure 22: LC3000 Laundry Reader Online Messages

Offline messages are only available on the reader when the system verifies that offline operations with the host are allowed and cardholders' ID numbers are valid.

Operating a Washer

1. Select one of the available washers from the display (see Figure 22).
2. Use the reader's numeric keypad to select the machine. The reader immediately displays a message to inform a cardholder of the status of the selected machine: Available or Out of Service. If an invalid number is used, the reader displays a "Machine Unavailable" message.
3. Swipe card. Once a laundry machine is activated for use, the reader displays the machine number.

Washer 05

Total $1.00

Please Swipe Card

Machine 05

Please load clothes

Start Machine

DRAFT

Once the system accepts the card swipe, the appropriate amount for the transaction is deducted from the cardholder's account. The reader displays a message to confirm the valid transaction.

If a card is not swiped or no other response is made within 10 seconds, the reader aborts the transaction.

The machine begins its cycle once you swipe your card and the system recognizes the transaction as valid. If the time limit lapses, power is turned off for the selected machine. However, the amount is deducted from the cardholder's account regardless of where the machine operated or not.

Refunds to a cardholder's account are at the site's discretion. They do not occur automatically.

Canceling a Transaction

To cancel a transaction, press the softkey, labeled "Clear" any time before swiping a card.

Operating a Dryer

1. Select one of the available dryers from the display (see Figure 22).
2. Use the reader's numeric keypad, to select a machine. The reader immediately displays a message to inform a cardholder of the status of the selected machine: Available, In Use, or Out of Service. If an invalid number is used, the reader displays a "Machine Unavailable" message.
3. Swipe card. Once a laundry machine is activated, the reader displays a message.

Machine 07

Total $1.25

Please Swipe Card

Once the system accepts the card swipe, the appropriate amount for the transaction is deducted from the cardholder's account. The reader displays a message to confirm the valid transaction.

Machine 07

Please Load Clothes

And Start Machine

If a card is not swiped or no other response is made within 10 seconds, the reader cancels the transaction.

The machine begins its cycle once you swipe your card and the system recognizes the transaction as valid. If the time limit lapses, power is turned off for the selected machine. However, the amount is deducted from the cardholder's account regardless of whether the machine operated or not.

DRAFT

Adding Dry Time

Additional drying time may be added at the beginning of the transaction or any time during the drying cycle.

To add time at the beginning of the transaction, complete the following steps:

1. Use the keypad to select the machine's number.

   The reader displays the machine number, the cost of the current cycle, and the cost of additional cycle time:

2. Press the Add Time softkey. Then swipe card. The reader sends the transaction to the System and returns with a new total amount.

Additional minutes can be added (up to 99 minutes).

Status Messages

If you select a machine that is currently in use, the reader displays the following message:

Machine 03 In Use

If you select a machine that is out of service or is turned off, the reader displays the following message:

Machine 09

Out of Service

DRAFT

Reader Menus and Settings

Manager Card

Using a Manager's card, administrators or designated staff can access menus on the LC3000 to obtain sales information and to modify reader settings. Those menu items are briefly explained below (see Figure 25: Manager Card Flowchart (page 36)).

Obtaining Sales Totals

To obtain Sales Totals for your Laundry Center, complete the following steps:

1. Swipe the manager's card.
2. Press 1 on the keypad. Once the sales options display, make a selection and then follow the screen instructions.

   Refer to the Reader Menu flowchart for more details on this menu option.

Figure 23: Manager Card Menu

Changing Terminal Setup

To change the reader's display (backlight and contrast) and the volume, complete the following steps:

1. Press 2 on the keypad. Make a selection and then follow the screen instructions.

Changing Machine Service

Set In/Out Service

This menu allows you to set a machine in or out of service.

1. Press 3 on the key pad.
2. Press 1 - Set In/Out Service.
3. Set Machine ID by entering a laundry machine number (available machines are numbered from 1 through 60).
4. Press 1 for Out of Service **or** press 2 for In Service.
5. Press OK to accept the selection, press Clear to change the selection, or press Abort to cancel the selection.

View Out of Service

To view machines currently out of service, complete the following steps:

1. From the main Manager's Menu, press 3.
2. Then, press 2 to view all machines currently out of service at that time. The reader displays all machines currently out of service at the time of the request.

DRAFT

Modifying and Viewing Bridge Status

To determine whether or not a Bridge has been configured and is properly communicating with the LC3000, complete the following steps:

1 Press 4 on the keypad.

The reader displays seven available Bridge listings and their existing status, as shown in **Figure 24** *below.*

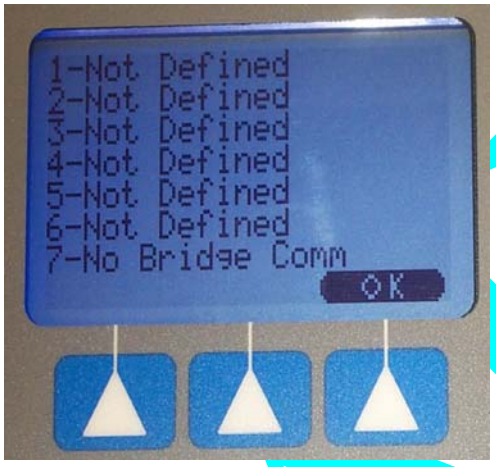

Figure 24: Bridge Status Display

Bridge Display Message	Description
Not Defined	This Bridge is not configured by the LWI CONFIG port.
No Bridge Comm	This Bridge is configured, but is not successfully community on the BRIDGE RS-485 port.
No LWIs Defined	This Bridge is successfully communicating on the BRIDGE RS-485 port, but no LWIs are defined for this Bridge.
No LWI Communication	One or more LWIs are defined for this Bridge, but no LWI communication exists.
LWI Communication OK	One or more LWIs are configured for this Bridge and all are successfully communicating with the Bridge.
LWI Communication	One or more LWIs are configured for this Bridge, but some of the LWIs are not successfully communicating with the Bridge.

Table 3: Bridge Status Menu

Viewing LCM20 Status

To determine the current communication status of any LCM20 to your LC3000 reader, complete the following steps:

1 From the main Manager's menu, press 5 on the keypad.

The reader displays the status of any existing LCM20.

Active and successful communication between the LCM20 and the LC3000 is indicated by the display of an ***A*** *on the reader screen. (Each displayed* ***A*** *represents an active LCM20 that supports 20 laundry machines.)*

A ___ ___

DRAFT

*Inactive and unsuccessful communication between the LCM20 and the LC3000 is indicated by the display of an **I** on the reader screen. (Each displayed **I** represents an inactive LCM20 that is not currently supporting 20 laundry machines.)*

I ____ ____

DRAFT

Manager Card Flowchart

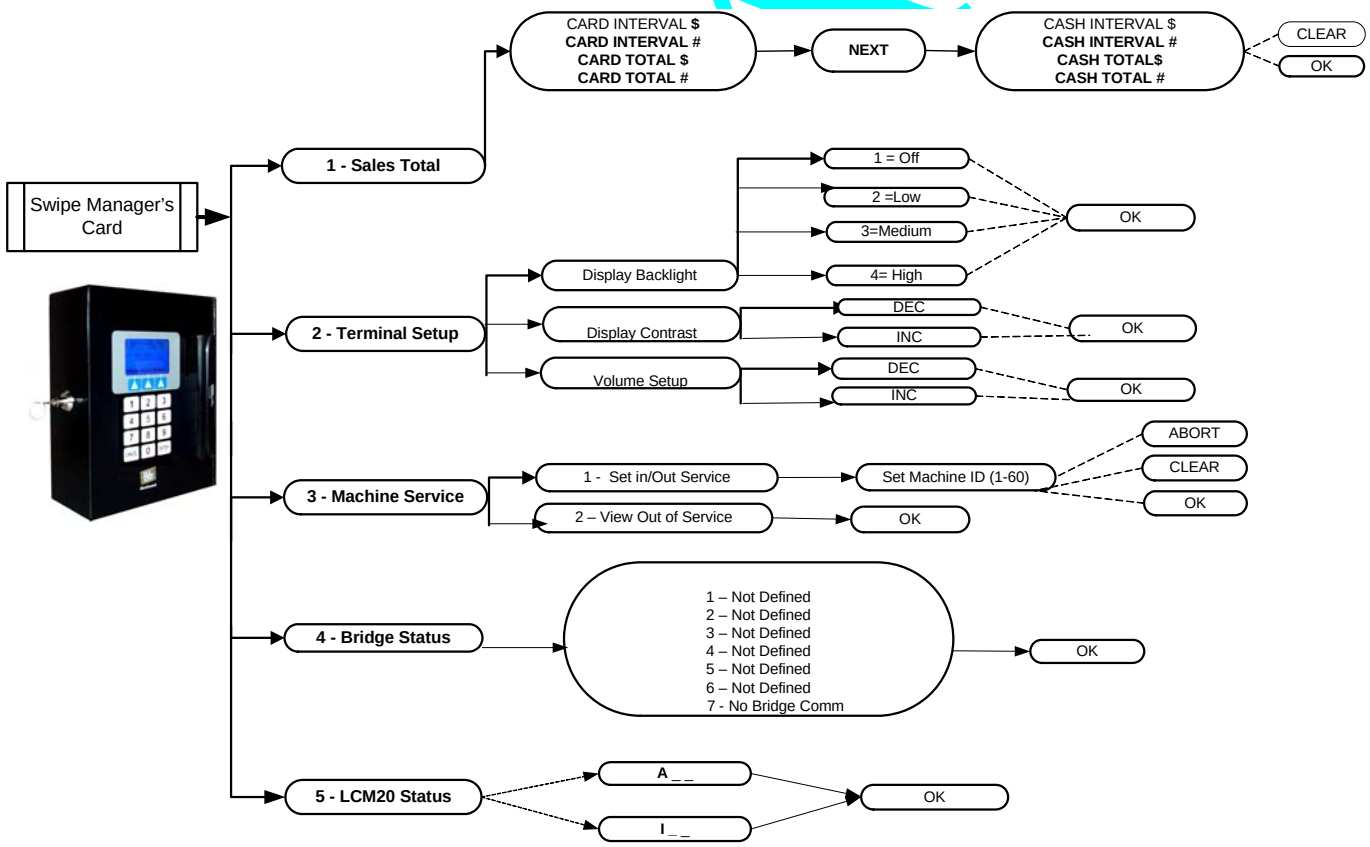

Figure 25: Manager Card Flowchart

LAUNDRY COMPONENT DIMENSIONS AND WEIGHT

- LC3000: 9.6" H x 7.92” W x 3.3" D, 7.6 lbs
- LE3/PSENCL: 9.6" H x 7.92" W x 3.3" D, 7.6 lbs
- LE3/BRIDGE: " H x ?" W x ?" D, 1.0 lb
- LW3XXX: 4" H x 3.1" W X 1.5" D, 1.0 lb

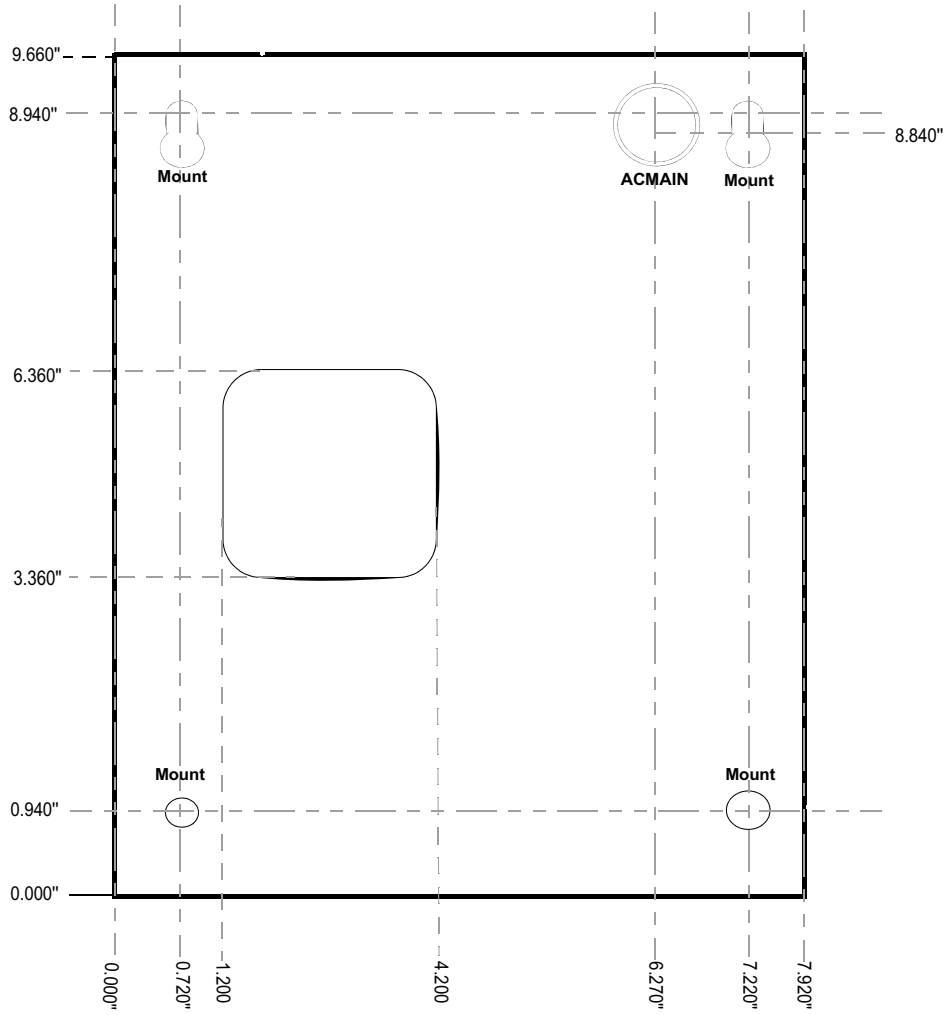

Figure 26: LC3000 Dimensions

Table 4: LC3000 Component Specifications

LC3000	Power	Input Voltage Range Input Frequency Input Current	120VAC 60Hz 1.4A, max
	Operating Environment	Temperature Relative Humidity Altitude	0 to +45C (+32 to +114F) 0 to 95 percent, non-condensing 0 -10,000 feet
	Non-Operating Environment	Temperature Relative Humidity Altitude	-20 to +70 C (-4 to +158F) 0 to 95 percent, non-condensing 0 - 35,000 feet
LE3/PSENCL with LCM20	Power	Input Voltage Range Input Frequency Input Current	120VAC 60Hz 1.4A, max
	Operating Environment	Temperature Relative Humidity Altitude	0 to +45C (+32 to +114F) 0 to 95 percent, non-condensing 0 -10,000 feet
	Non-Operating Environment	Temperature Relative Humidity Altitude	-20 to +70 C (-4 to +158F) 0 to 95 percent, non-condensing 0 - 35,000 feet
LE3/BRIDGE	Power	Input Voltage Range Input Frequency Input Current	9 to 30 VAC or 7 to 36 VDC 60Hz 0.12A, max
	Operating Environment	Temperature Relative Humidity Altitude	0 to +45C (+32 to +114F) 0 to 95 percent, non-condensing 0 -10,000 feet
	Non-Operating Environment	Temperature Relative Humidity Altitude	-20 to +70 C (-4 to +158F) 0 to 95 percent, non-condensing 0 - 35,000 feet
LWI3xxx	Power	Input Voltage Range Input Frequency Input Current	9 to 30 VAC or 7 to 36 VDC 60Hz 0.12A, max
	Operating Environment	Temperature Relative Humidity Altitude	0 to +45C (+32 to +114F) 0 to 95 percent, non-condensing 0 -10,000 feet
	Non-Operating Environment	Temperature Relative Humidity Altitude	-20 to +70 C (-4 to +158F) 0 to 95 percent, non-condensing 0 - 35,000 feet

DRAFT

FEATURES

- Includes 15-key keypad and an 8-line x 21 character LCD display
- Contains a keyed lock to secure the inside of the unit, along with a hinged door to access the circuit boards (*If you prefer a high security lock or unique keys, you can purchase Medeco 60W-0750-239 from RA-LOCK Company (800-777-6310.)*
- Supports 10/100Base-T or RS-485 Communication
- Supports wired or 2.46Hz wireless communication to laundry machines
- Compatible with both Universal and Unix Editions of BbTS

- Reader supports up to 60 laundry machines
- IP and Wireless protocol encrypted using AES
- Software compatible with Danyl LCU
- Retrofit path for Danyl LMI machine interfaces
- Supports debit-ready laundry machines
- Software downloads remotely
- Supports coin-operated machines and tracks the number of cycles and amount collected during each coin cycle.

This device contains an integrated lithium battery. There is a risk of fire if the battery is replaced with an incorrect type. Proper disposal of a used battery is essential. Please follow the manufacturer's instructions.

DEFAULT LC3000 CONFIGURATION SETTINGS

The LC3000 Controller Unit default settings are:

- DHCP enabled
- NP (host) IP address assigned by DHCP server

Restore Default Settings

Forget your password? Refer to Restore Default Settings on page for details.

---

1. Connect a cable from a computer's serial port to the one labelled "RS-232 CONFIG".
   Cable connections are shown in Table 2: RS-232 Config Port Connection, on page 15.
2. Open a terminal program (such as Hyperterminal) and establish connection settings:
   - 9600 baud
   - 1 stop
   - no parity
   - no flow control
3. Type xxx within 3 seconds after "Config Task Started" is displayed in the terminal program. "Restoring to Factory Defaults will display during reset.
4. Disconnect cable from RS-232 CONFIG.

DRAFT

ERROR MESSAGES (UNIX ONLY)

When a transaction cannot be completed successfully, the reader displays the TRANSACTION INVALID message followed by an explanation:

Card Deleted: The cardholder's card number has been deleted from BbTS and is no longer valid at the reader.

Card Expired: The card has expired.

Card Invalid: LS#; The issue code on the card does not match the issue code the System is expecting.

Card Invalid: LS; The card has been reported lost or stolen.

Card Not in System: The card is not entered in the System.

Card Suspended: The card account does not have a sufficient balance or credit to cover the purchase. The remaining balance is displayed.

If the account has a negative balance, the balance is displayed with a minus sign; for example, -5.00.

Invalid Location: The privilege plan rules deny the use of the privilege at the location where the cardholder has attempted to use it.

Invalid On Holiday: The system is programmed to recognize holidays. The privilege plan rules do not allow the use of the privilege during a holiday.

Over Credit Limit: The cardholder's transaction goes over the credit limit defined in the privilege plan rules, or, the cardholder's personal credit limit has exceeded.

Over Daily Limit: The cardholder's transaction goes over the amount limited per transaction as defined in the privilege plan rules.

Plan Expired: A cardholder's privilege plan has expired.

Plan Suspended: A cardholder's privilege plan has been suspended.

Privilege Expired: A cardholder's privilege has expired.

Privilege Suspended: The cardholder has the privilege, but the privilege has been suspended for some reason.

Privilege Unassigned: The privilege the cardholder attempted to use is not assigned to the cardholder.

ERROR MESSAGES (UNIVERSAL EDITION)

Insufficient Funds?

DRAFT

RETROFITS

MW9010/MW9012 LCR Retrofits (For Wired Laundry Centers only)

If you have an existing system equipped with an MW9010/MW9012 laundry reader, you will need to have retrofits installed. The LC3000 can communicate with laundry machines through LCM2, LCM20, and LWI and is intended to support retrofit or new installations. This support is managed locally by the LC3000.

The LC3000, as shipped from Blackboard, is configured for up to 60 machines on up to 3 LCM20s. If LCM2 support is required, it may be changed in the reader with the “machine” command. This command can be used either from the RS-232 CONFIG or using Telnet.

Each of the 60 machines can reside on an LCM2, LCM20, or LWI. The machine command usage is as follows:

```
machine [machine number] [lcm2|lcm20]
```

To change machine 5 from LCM20 to a LCM2, type the following:

```
machine 5 lcm2
```

In addition, all machines can be changed simultaneously from one interface to another. For example:

```
machine alllcm20
machine alllcm2
```

By typing “machines”, you list all the machine interfaces for all 60 machines.

Each LWI or Wireless Bridge is not required to use this machine command. When the LC3000 updates the local machine definition, they are also configured with the LWI Config.

The local machine interface definitions permanently remain within the reader and are not affected by any other command.

Danyl Retrofits

DRAFT

LC3000 Drill Template

DRAFT
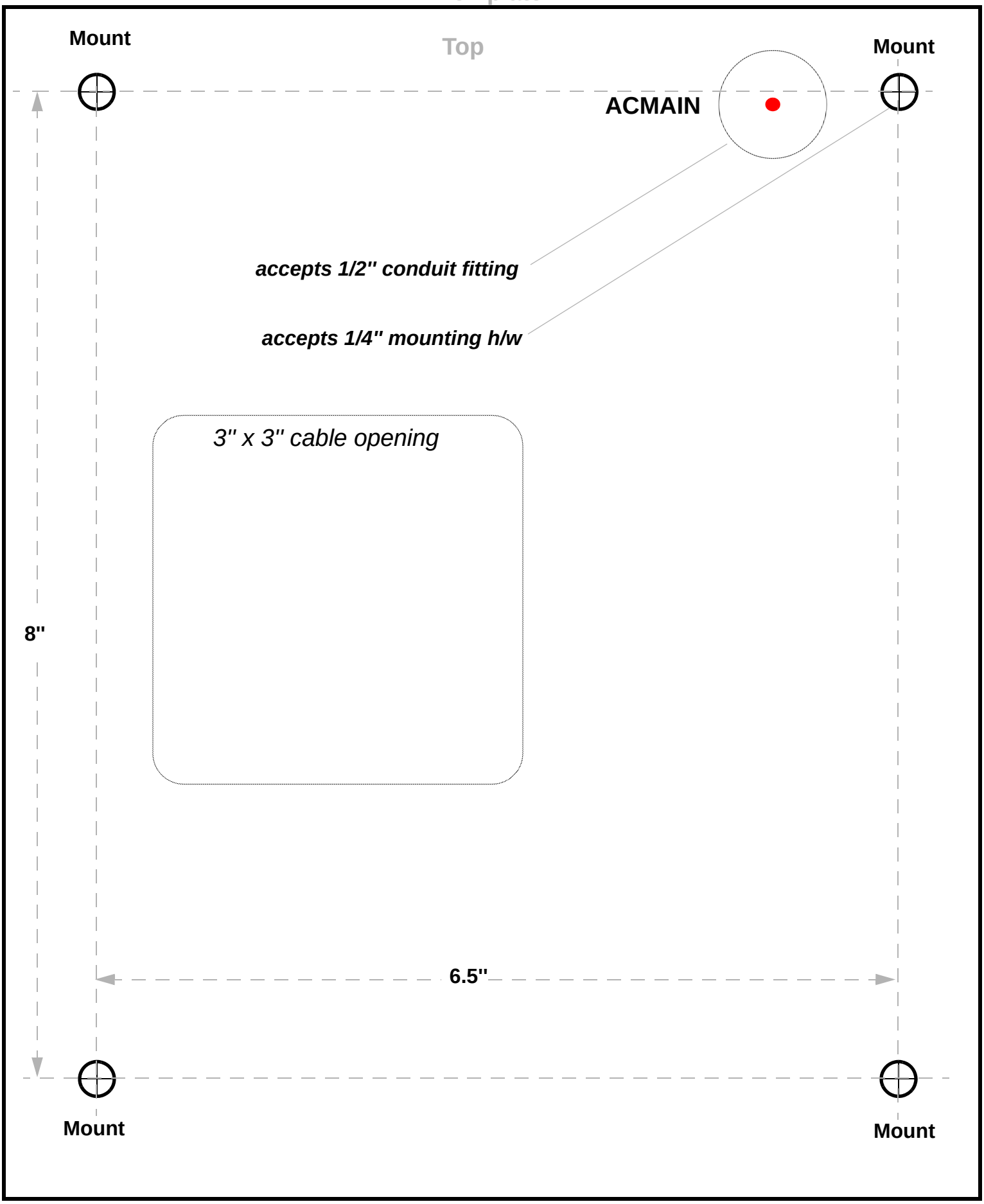
LC3000
Drill Template