harman/kardon®

drive + play™

Owner's Manual

INTRODUCTION

Thank you for purchasing Harman Kardon's Drive + Play™, an elegant mobile audio solution that provides the driver with total iPod® control, including full music browsing capability. We've organized this manual to make installation and operation as simple and trouble-free as possible. Please read it thoroughly before you begin installing Drive + Play. Remember to keep your sales receipt with this manual in a safe place, so both are available for future reference.

If you have any questions about the installation, please contact us at:

1 – (516) – 255 – HKHK (4545)

Or on the Web at:

www.harmankardon.com

iPod® Requirements

Drive + Play is designed to work with all iPods equipped with the following Apple® hardware and software:

1. iPod dock port

2. iPod software

Model Description and Minimum Software Version/Date					
3G	**Mini**	**4G**	**Photo**	**5G**	**Nano**
Buttons above touch wheel	All	Click Wheel	Color Screen	Color Screen	Color Screen
v2.2	v1.1	v3.0	v1.0	v1.0	v1.0
2/04	3/04	7/04	10/04	6/05	9/05

As long as both of these requirements are met, Drive + Play can be easily added to virtually any mobile audio system for total control of your iPod.

Drive + Play Warnings

Distraction Warning

Do not connect or disconnect your iPod or program Drive + Play while driving. Always be careful and attentive to your vehicle and the traffic around you. Always obey all traffic laws while driving. Always pull off the road and park in a position you are sure presents absolutely no risk before browsing your iPod or adjusting the settings on your Drive + Play.

Connecting the iPod

Always hold the Drive + Play's iPod dock connector by its sides and gently insert (or remove) the dock connector. Never use excessive force to insert or remove the connector, or damage to your iPod may occur.

Lost Data

Harman/Kardon is not responsible for any lost data on your iPod when using the Drive + Play. Be sure to back up the audio data files on your computer.

Loud Music and Hearing

Playing loud music in a vehicle can permanently damage your hearing, as well as hinder your ability to hear traffic. The maximum volume levels achievable with this product, combined with high power amplification, may exceed safe levels for extended listening. We recommend using low volume levels when driving. Harman/Kardon accepts no liability for hearing loss, bodily injury, or property damage as a result of use or misuse of this product.

Headphones and Driving

Do not use headphones while operating a vehicle. This practice is illegal in some areas. Always be careful and attentive to your vehicle and the traffic around you. Always obey all traffic laws while driving. Drive + Play's audio output is not suitable for driving headphones and is intended to output a signal appropriate for an audio system's line-level input jack.

About Installation

Although we recommend professional installation for your Harman/Kardon Drive + Play, this product is designed for do-it-yourself installation as well, especially when using the wireless FM transmission method (see page 4). Although the enclosed instructions explain how to install the Drive + Play in a general sense, they do not show the exact methods for your particular vehicle. After reading the manual, if you feel uncomfortable in performing the necessary steps to install the product, consider asking your car-audio dealer about professional installation options.

INSTALLATION

Parts List

Drive + Play includes the following components and parts:

- Text Display With Universal Mounting Base and Attached Cable (3m)
- Control Knob With 30° Mounting Base and Attached Cable (3m)
- Electronics Enclosure (the Brain)
- 12-Volt Accessory Power Cable (2m) With Cigarette Lighter Adaptor
- 12-Volt Power Harness (0.5m) With In-Line Fuse Holder (for direct connection to the vehicle's electrical system)
- Line Out Cable (1.6m): Stereo 3.5mm (M) Plug to L/R RCA (M) Plugs
- iPod Cable (3m): 8-Pin Mini DIN (M) Plug to iPod Dock Connector
- (2) Control Knob Bases: 0° and 60°
- (2) Mounting Plates for Knob Base and Display Base
- (10) Mounting Screws: (3) Knob Base, (3) Display Base and (4) Electronics Enclosure
- (6) Cable Ties, Black
- (2) Hex Keys: 3mm and 1.5mm
- (2) Adhesive Mounting Pads
- (2) Alcohol Prep Pads
- Warranty Card

Tools and Precautions

To install Drive + Play components, we recommend using the following tools:

- Electric or cordless drill with drill bit set
- Phillips screwdriver set
- Pencil
- Protective eyewear

Before starting the installation, please observe the following precautions:

- Turn off all audio system power, including the iPod, before making any connections.
- Always wear protective eyewear when using tools.

Choosing Installation Locations

IMPORTANT: Drive + Play should be installed according to these instructions and relevant regulations. No part of this system should obstruct the driver's view of the road or vehicle controls or information displays necessary for safely operating the vehicle. The text display should be positioned to eliminate glare and reflections, and should be as close as possible to the driver's normal line of sight.

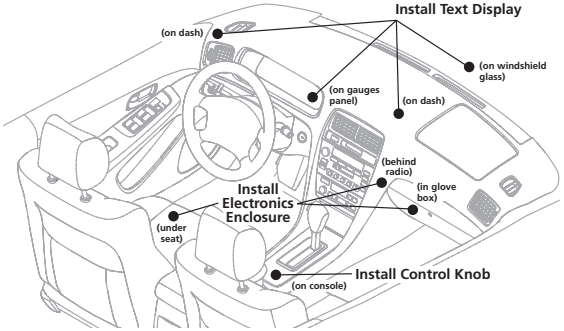

Drive + Play Components

Drive + Play consists of three main components: Text Display, Control Knob and Electronics Enclosure. They operate together as a system to make controlling your iPod easy, and to route the audio signal to your mobile audio system. All three components must be installed. You can choose wireless FM transmission, wired FM transmission (adaptor sold separately), or direct connection of the line-output audio signal for the audio interface.

Text Display Location

The Text Display shows current iPod information and is similar to the display on your iPod. It comes with a three-position pivot arm for virtually limitless viewing adjustment. You can install the unit in a variety of locations, as long as the proposed site offers a direct view of the display. For easiest viewing, mount the unit near other instrument-panel gauges or on top of the dashboard.

Control Knob Location

The Control Knob allows you to control the iPod much like the iPod Click Wheel. The unit comes with three interchangeable bases so you can choose the most comfortable operation angle. Ideally, you should install the Control Knob in a location that provides comfortable access while driving where you can easily feel and operate it without taking your eyes off the road.

continued on next page...

Choosing Installation Locations (continued)

Electronics Enclosure Location

The Electronics Enclosure contains the wireless FM transmitter and the power supply for the three components. You can install it under a seat, in the center console compartment, or in the glove box. If possible, select a site that provides both convenient access to the enclosure and easy cable routing.

Drive + Play also provides an audio interface to a cell phone, satellite radio, or any other device that outputs a low-level audio signal using the Aux In jack. When using the Auxiliary Input feature, select a mounting site for the electronics enclosure that provides easy access to the Aux In jack. Otherwise, you will need to purchase a 3.5mm stereo extension cable for a longer cable run (see Wiring Diagram on page 5).

iPod Location

With this system, you can place your iPod in any location that allows you to conveniently connect it to the Drive + Play iPod cable. Since you don't have to view the iPod or use its controls, you can place it inside the center console compartment, the glove box, or another hidden site.

NOTE: Since an iPod can get hot during operation, avoid tightly enclosed areas. Review "About Operating and Storage Temperatures" in your iPod's User's Guide.

Planning the Installation

IMPORTANT: When routing wires from any of the components to the electronics enclosure, be sure to route them away from any moving parts such as the gear-shift levers, pedals, parking brake and steering column.

Temporarily place the main components at their proposed sites and lay out their interconnect cables to judge the cable routes (see Wiring Diagram on page 5 for wiring options). If a cable comes up short, try moving one or more components to find a better run. Next, inspect the vehicle's interior assembly and locate areas where cables can be hidden or tucked into seams (e.g., under the center console housing, along body panel, etc.). Once you have found the ideal cable runs and component locations, mark the sites with a pencil and continue with the installation.

Choosing an Audio Interface

Referring to the Wiring Diagram on the next page, you can interface the Drive + Play's audio output to your mobile audio system in three ways:

Wireless FM Transmission

This method is the most convenient and requires the least wiring. After setup, you simply tune your radio to the assigned FM frequency to listen to your iPod. Drive + Play has a built-in FM transmitter and its software provides a choice of five fixed FM frequencies or a tunable frequency for areas where none of the fixed frequency selections are available. See Initial Setup on page 9 for details.

Wired FM Transmission

For better quality FM transmission performance, consider purchasing our Wired FM Adaptor for direct connection (via the Antenna jack on the Electronics Enclosure) to your radio's antenna input (see Wiring Diagram on the next page).

NOTE: Depending on your vehicle model, antenna plug adaptors may be required to connect the Wired FM Adaptor to your radio and antenna.

Connecting to Audio Out

This method provides the best sound quality, but involves more wiring. After making the connections and setup, you will select Auxiliary Input or CD Changer on your audio system to listen to your iPod. See Initial Setup on page 9 for details.

NOTE: In order to use the Audio Out, your audio system must have an auxiliary input jack or a CD changer input. A third-party interface is required for a CD changer interface. If your system has neither feature, FM transmission is the only choice for the audio interface.

Choosing a Power Interface

Referring to the Wiring Diagram on the next page, you can connect Drive + Play's power connections to your vehicle's electrical system in one of two ways:

Removable 12-Volt Accessory Power Cable With Cigarette Lighter Adaptor

This power interface is the most convenient, since the power cable can be simply plugged into the vehicle's cigarette lighter outlet. No additional wiring is required. The cigarette lighter adaptor is fuse-protected, and the fuse can be changed by removing the adaptor's end nut.

NOTE: If your cigarette lighter works even when the car's ignition switch is in the "off" position, you'll have to turn Drive + Play on manually. It can be turned off manually, or it will shut off automatically after one hour of inactivity.

Wiring Diagram

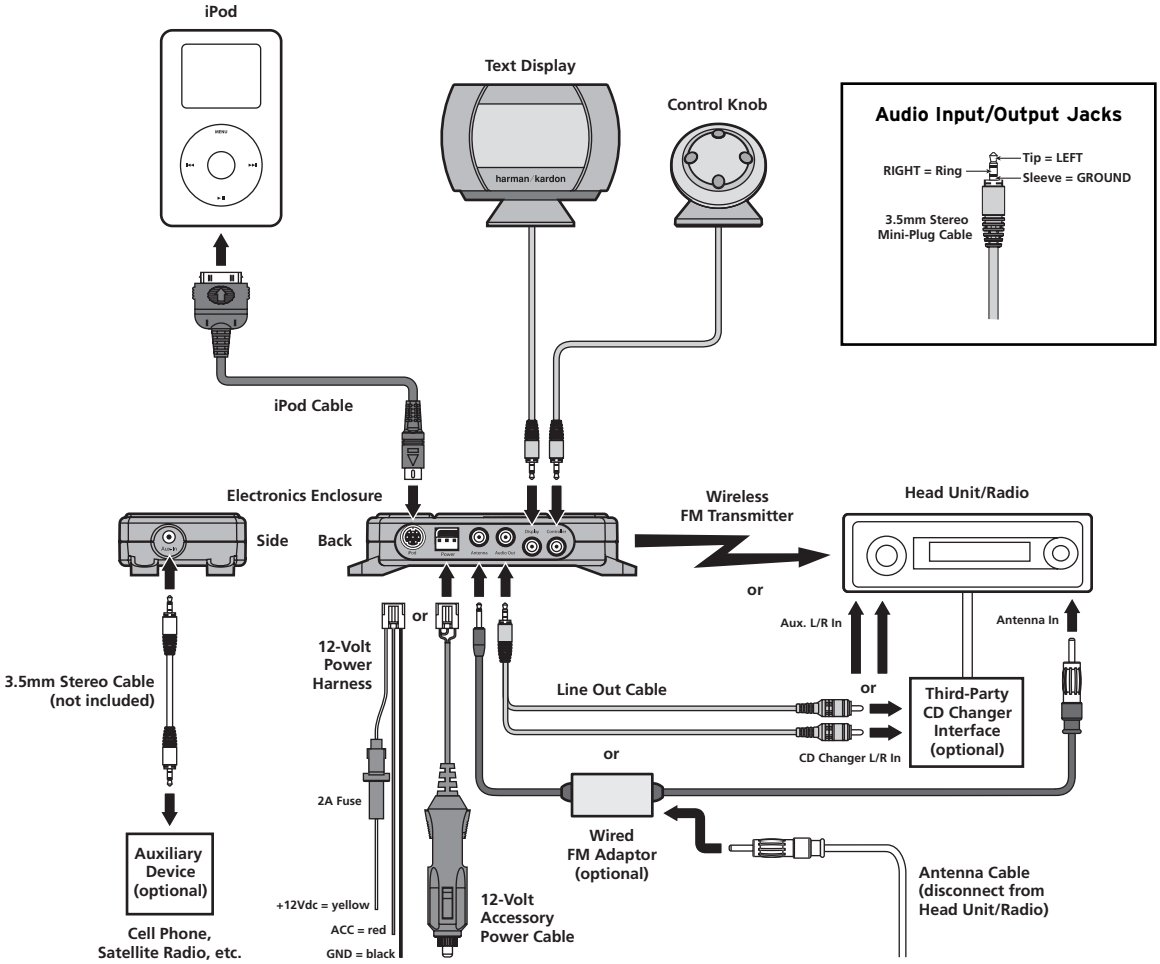

Direct Connection of the 12-Volt Power Harness With In-Line Fuse Holder

Use this method when you want a permanent power connection to the vehicle. Also, by connecting the harness's red wire to the ignition switch's ACC terminal, Drive + Play will turn on or off with the vehicle's ignition (ACC) switch. An in-line fuse holder provides protection for the unit.

IMPORTANT: Replace the in-line fuse only with one of the same type and rating.

Installing Components

Installing the Electronics Enclosure

At the selected site, install the Electronics Enclosure. Use either the enclosed cable ties or mounting screws, as shown below.

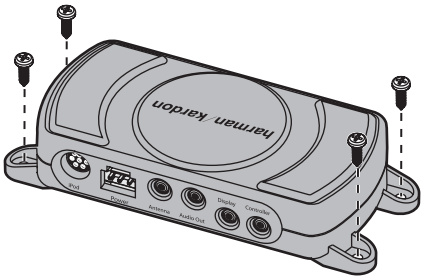

Installing the Text Display

1. Temporarily place the Text Display at the proposed site and check the default viewing angle while adjusting the pivot arm. If it meets your needs, then skip to step 2. Otherwise, change the viewing angle as follows:
   a. Using the 3mm hex key, loosen the recessed hex screw (inside the display base) until the pivot arm is free from the display assembly. The hex screw will remain captive.

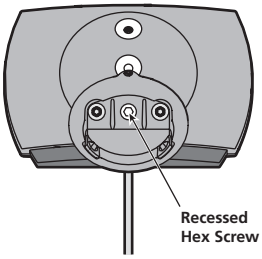

   b. Select another viewing angle position (middle or top). Reassemble the parts in reverse order and tighten the recessed hex screw.

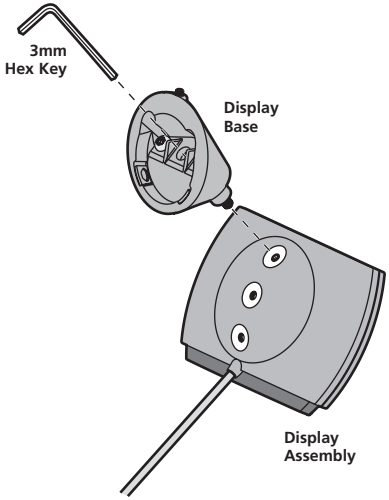

2. At the base, using the 1.5mm hex key, loosen (but do not remove) the hex setscrew.
3. To install the Text Display with adhesive tape, perform the following steps or skip to step 4:
   a. Insert the mounting plate, rotate it 180°, and tighten the hex setscrew as shown below.

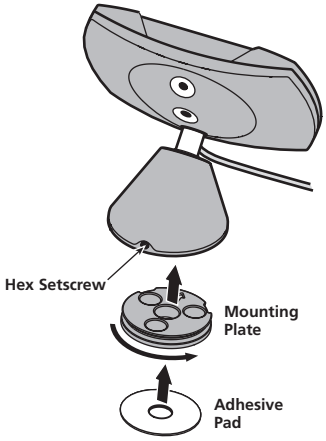

b. At the proposed site, wipe the surface and exposed mounting plate with one of the enclosed alcohol pads. Allow both to dry.

c. Remove the protective tape from one side of one of the enclosed adhesive pads, and press the pad against the mounting plate.

d. Remove the remaining protective tape, and press and hold the Text Display to its site for 5 seconds.

4. To install the Text Display with mounting screws, perform the following steps:

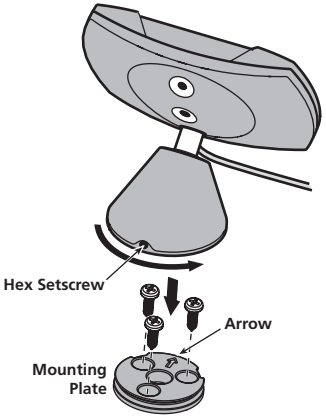

a. At the proposed site, place the mounting plate and rotate it so that the arrow will point toward the hex set-screw at the back of the base after it's mounted.

b. Holding the mounting plate in position, fasten it to the surface with three enclosed mounting screws.

c. Place the Text Display on the mounting plate (180° from its final position), and then rotate it a half-turn to the final position. Tighten the hex setscrew at the back of the base.

5. Route the attached cable to the Electronics Enclosure.

Installing the Control Knob

NOTE: The Control Knob's cable can be routed differently for adhesive or screw mounting. The default cable route is through the back of the base and should be used when mounting the base with the supplied adhesive pad. For screw mounting, the cable can be routed through the center of the base and through a hole that must be drilled in the mounting surface. You may use the mounting plate as a template.

1. Place the Control Knob at the site and check the operation angle with the default 30° base. If it meets your needs, then skip to step 2. Otherwise, change the base as follows:

a. Using a Phillips screwdriver, remove the two screws from the bottom of the base and set the internal mounting plate aside.

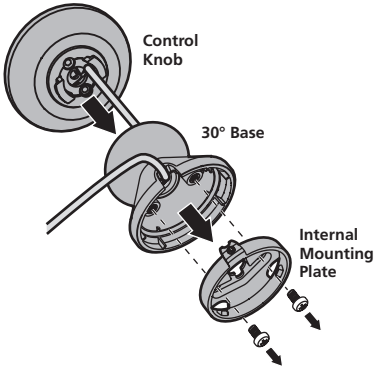

b. While holding the base, grasp the Control Knob and turn it to the right until you feel it release from the base. Slide the base off the attached cable and put it aside.

c. Select another base (0° or 60°) and thread the cable through the base to meet the Control Knob.

d. Place the new base against the Control Knob bottom and turn it to the left until it locks. Route the attached cable through the base's opening. Fasten the internal mounting plate to the base with the screw(s) from step a.

NOTE: The 60° base uses two screws, while the 0° base uses one screw.

continued on next page...

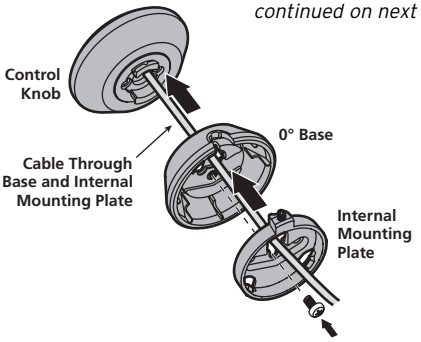

Installing Components

Installing the Control Knob (continued)

2. At the base (below the cable), using the 1.5mm hex key, loosen (but do not remove) the hex setscrew.
3. To install the Control Knob with adhesive tape, perform the following steps or skip to step 4:
   a. Insert the mounting plate, rotate it 180°, and tighten the hex setscrew.

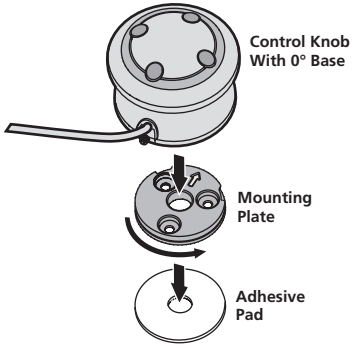

   b. At the site, wipe the surface and exposed mounting plate with one of the enclosed alcohol pads. Allow both to dry.
   c. Remove the protective tape from one side of one of the enclosed adhesive pads, and press the pad against the mounting plate.
   d. Remove the remaining protective tape, and press and hold the Control Knob to its site for 5 seconds.
4. To install the Control Knob with mounting screws, perform the following steps:
   a. At the proposed site, place the mounting plate and rotate it so that the arrow will point toward the hex set-screw at the back of the base after it's mounted.
   b. Holding the mounting plate in position, fasten it to the surface with three enclosed mounting screws.
   c. Using the mounting plate's center hole as a template, drill a hole through the mounting surface and pass the Control Knob's cable through the hole.
   d. Place the Control Knob on the mounting plate (180° from its final position), and then rotate it a half-turn to the final position. Tighten the hex setscrew at the back of the base.

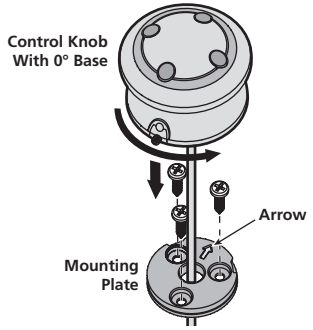

5. Route the attached cable to the Electronics Enclosure.

Installing the iPod Cable

Route the iPod dock connector cable to the chosen iPod site (e.g., the center console compartment or the glove box). Be sure to leave enough cable exposed to make connecting and disconnecting the iPod easy.

Making the System Connections

With all power off, refer to the Wiring Diagram on page 5 and make only the power, ground and audio signal connections that apply to the scheme you have chosen. After verifying all connections including the iPod, proceed to the next section, Operating Drive + Play.

OPERATING DRIVE + PLAY

Distraction Warning

Do not connect or disconnect your iPod or program Drive + Play while driving. Always pull off the road and park in a position that you are absolutely sure presents no risk before browsing your iPod or adjusting the settings on your Drive + Play. Always obey all traffic laws while driving.

Overview

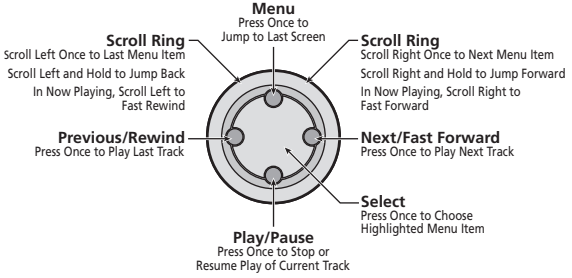

Drive + Play operates much like the iPod itself. The Control Knob mimics the iPod's Click Wheel, and its software uses a similar menu-select system. Before you use Drive + Play, you'll need to set it up for the first time. After you perform the Initial Setup using the Settings Menu, controlling your iPod with Drive + Play will be easy and intuitive.

To make selections on the Text Display, you simply turn the Control Knob's Scroll Ring to highlight a desired menu item. Turn the Scroll Ring to the right to scroll down, and to the left to scroll up. Press the (center) Select button once to confirm your selection.

Depending on your selection, this display may show:

- a list of settings or menu operation, or

When in any of the "settings" menus:

- a highlighted setting with a choice of values, or
- a highlighted setting with a check box, or
- a graphic display which may be adjusted using the Scroll Ring.

Pressing the (center) Select button again will select the next highlighted setting (to the right) or go back to the beginning if all settings have been viewed, or set the check box on or off (i.e., check or uncheck). If a graphic display appears, use the Scroll Ring to adjust the setting.

After making your adjustment or selection, you may press the (top) Menu button to go to the previous menu. If no buttons are pressed within 10 seconds, the Now Playing screen will appear. At this point, pressing the Menu button will take you back to the screen of your previous selection. Repeated Menu presses will take you back to the Drive + Play Menu.

Initial Setup

NOTE: Please refer to Drive + Play's display screen as you make initial settings. Also refer to your iPod User's Guide for operation information.

Power On

1. With the main volume turned down (on your audio system), power on your entire mobile audio system and then turn on Drive + Play by pressing the (bottom) Play/Pause Button. If everything is operating correctly, the iPod screen will display the following message:

   OK to disconnect.

2. Drive + Play's Text Display will show the Harman Kardon splash screen first, followed by the Now Playing screen. What the Now Playing screen displays next depends on the following conditions:
   - Drive + Play will tell your iPod to play the same selection as when it was last turned off. If you plugged your iPod into Drive + Play while it was playing, Drive + Play will tell the iPod to play the current song without interruption.
   - However, if nothing was playing when your iPod was last turned off or when it was plugged in, Drive + Play will tell the iPod to begin playing the first song in its Songs database.

Setting FM Transmission

FM Settings can be accessed from the Main Menu or later within the Settings Menu.

- **To turn FM Transmission on or off:**

  Drive + Play Menu > FM Settings > FM Transmitter> select On (default) or Off.

- **To change the preset FM Frequency:**

  Drive + Play Menu > FM Settings > FM Frequency > select 88.1 (default), 88.3, 88.5, 88.7, 88.9 or Custom (default = 91.7MHz or last setting).

  NOTE: If the preset FM frequencies are already assigned to FM stations in your listening area, then use Custom FM Frequency (below) to select an unused frequency. The default setting is 91.7MHz.

- **To select a Custom FM Frequency:**

  1. Drive + Play Menu > FM Settings > Custom Frequency.
  2. The FM Frequency graphic display will appear. Scroll to select a desired FM frequency.

Setting Shuffle

You can set Drive + Play to shuffle (randomly play) iPod songs or albums as follows:

- Drive + Play Menu > Settings > Shuffle > select Off (default), Songs or Albums.

Setting Repeat

You can set Drive + Play to repeat the current iPod song or all songs in a playlist or album as follows:

NOTE: When browsing by Artists, Genres or Composers, selecting Repeat All will repeat the album that contains the selected song.

- Drive + Play Menu > Settings > Shuffle > select Off (default) > One > All.

continued on next page...

Initial Setup (continued)

Setting AUX Input

To route an audio signal from a device (e.g., cell phone or satellite radio; see Wiring Diagram on page 5) connected to Drive + Play's auxiliary input to your mobile audio system:

- **To enable or disable automatic sensing and switching of audio signals on Drive + Play's auxiliary input:**

  Drive + Play Menu > Settings > select Auto audio sense check box to enable or to disable (default) it.

- **To select Auxiliary input signals manually with iPod connected:**

  1. Drive + Play Menu > Settings > AUX input.
  2. Go Back (on) will appear.

- **To restore audio from the iPod manually with iPod connected:**

  1. Drive + Play Menu > Settings > Go Back (on).
  2. Audio from the iPod will be restored, and the Settings Menu will appear.

- **To enable/disable AUX input manually, when no iPod is connected:**

  1. Turn on the Drive + Play. Aux is Disabled is highlighted.
  2. Press (center) Select button once to enable AUX input. Listening to AUX message will appear.
  3. Press Select button again to disable AUX input. Aux is Disabled message will appear.

Setting the Display

You can customize Drive + Play to display your viewing preferences as follows:

- **To enable or disable Large Fonts:**

  1. Drive + Play Menu > Settings > Display Settings > select Large Font check box to turn it on or off (default).
  2. To enable or disable Large Fonts, press the (top) Menu button twice to return to the Drive + Play menu.

     NOTE: When Large Fonts is disabled (unchecked), the Now Playing screen can display up to 32 characters. When Large Fonts is enabled (checked), the first 16 characters will be displayed and you can press the (center) Select button to display the next 16 characters and again to display the first 16, or use Auto Scroll (see next item).

- **When Large Fonts are enabled, you can also enable or disable Auto Scroll, which automatically scrolls a text message longer than 16 characters in the Now Playing screen:**

  Drive + Play Menu > Settings > Display Settings > Auto Scroll > select On or Off (default).

- **To adjust the display's contrast:**

  1. Drive + Play Menu > Settings > Display Settings > Adjust Contrast.
  2. The Contrast graphic display will appear. Scroll to select a desired contrast.

- **To adjust the display's backlight:**

  1. Drive + Play Menu > Settings > Display Settings > Adjust Backlight.
  2. The Brightness graphic display will appear. Scroll to select a desired brightness.

- **You can set Drive + Play's backlight to turn off after 10 seconds. When it is off, pressing any button on the Control Knob will turn it back on. To turn the display's backlight timer on or off:**

  Drive + Play Menu > Settings > Display Settings > Backlight Timer > select On (default is always on) or 10 sec.

- **To enable or disable an inverted display (i.e., white text on black background):**

  Drive + Play Menu > Settings > select Display Settings check box to enable or disable (default) it.

Setting the Drive + Play (Main) Menu

You can set the Drive + Play (Main) Menu to display your choice of menus as follows:

NOTE: As a default, the following eight menus will be displayed (denoted by checked boxes): FM Settings, Now Playing, Playlists, Artists, Albums, Songs, Genres and Composers. If you want all these selections to display, then skip this section.

1. Drive + Play Menu > Settings > Change Main Menu.
2. Scroll to a selection (e.g., Composers) you want to remove and press the (center) Select Button once to uncheck the box. To add the menu again, press the (center) Select Button once to check the box.
3. Repeat step 2 for other menus you want to remove from or add to the Main Menu.

Setting the Sleep Timer

Drive + Play is equipped with a sleep timer that delays its power off by a default of 2 seconds after the ignition is turned off. You can set a different delay time as follows:

NOTE: Sleep Timer only works when the Drive + Play's ACC wire is connected to the ignition switch's accessory terminal (see Wiring Diagram on page 5).

- Drive + Play Menu > Settings > Sleep Timer > select 2 sec (default), 4 sec, or 8 sec.

Setting the Jump Size

When browsing a database (songs, albums, artists, etc.), you can scroll and hold to jump to a different position in the list, skipping over undesired titles. The default jump size is 10 percent of your database. You can set a different jump size as follows:

- Drive + Play Menu > Settings > Jump Size > select 5%, 10% (default), 15%, 20%, or 25%.

About Drive + Play

You can view information about Drive + Play as follows:

- Drive + Play Menu > Settings > About.

Resetting All Settings

NOTE: Resetting all settings will erase all your custom settings and replace them with default values.

To reset all Drive + Play settings to their default values:

1. Drive + Play Menu > Settings > Reset All.
2. After a few seconds, you will see the Harman Kardon splash screen, followed by the Now Playing screen. At this point, all Drive + Play settings have been reset.

Browsing and Playing Songs

Browsing and playing songs using Drive + Play works much like an iPod. Using the Control Knob (see Overview on page 8), you can play songs in any playlist, or play songs in categories such as Artists, Albums, Songs, Genres or Composers.

NOTE: Drive + Play does not support chapter search when playing an Audiobook. You may use the scroll wheel to move forward or backward manually.

- Press the (center) Select Button to advance through menu items to locate and play songs.
- Press the (top) Menu Button to go back to a previous menu.

When a song starts to play, the Text Display will show the Now Playing screen (see above right) with Song Name, Artist, track number and the elapsed play time. You can also set Drive + Play to shuffle-play or repeat-play a song or album.

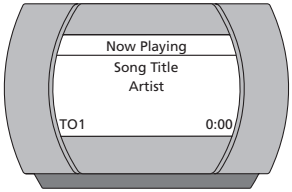

NOTE: Now Playing, Playlists, Artists, Albums, Songs, Genres or Composers will only appear in the Main Menu after they have been checked for display (see the previous page).

Browsing Playlists

- Drive + Play Menu > Playlists > select a playlist (e.g., Favorites) > select a song.

  NOTE: The On-The-Go playlist will not be updated while using Drive + Play.

Browsing Artists

- Drive + Play Menu > Artists > select an artist > select an album > select a song.

Browsing Albums

- Drive + Play Menu > Albums > select an album > select a song.

Browsing Songs

- Drive + Play Menu > Songs > select a song .

Browsing Genres

- Drive + Play Menu > Genres > select a genre > select an artist > select an album > select a song.

Browsing Composers

- Drive + Play Menu > Composer > select a composer > select an album > select a song.

Shuffle Play

You can set Drive + Play to shuffle (randomly play) iPod songs or albums as follows:

- Drive + Play Menu > Settings > Shuffle > select Off (default), Songs, or Albums.

Repeat Play

You can set Drive + Play to repeat the current iPod song or all songs in a playlist or album as follows:

NOTE: When browsing by Artists, Genres or Composers, selecting Repeat All will repeat the album containing the desired song.

- Drive + Play Menu > Settings > Shuffle > select Off (default), One, or All.

TROUBLESHOOTING

Problem:

Message = iPod Disconnected

Solution:

- Check that the iPod Connection Cable is connected between the Electronics Enclosure and the iPod.

Problem:

Message = AUX is Disabled

Solution:

- Check AUX Input (see page 10).
- Check the connection between the Electronics Enclosure and the auxiliary device.

Problem:

Hearing static when playing the iPod with wireless FM transmission.

Solution:

- Interference from an FM station at the same frequency. Try another FM frequency (see page 9).
- Consider installing the optional Wired FM Adaptor (see page 5).

Problem:

Drive + Play won't turn on.

Solution:

- Replace the in-line fuse with one of the same type and rating.

Problem:

Message = Please update your iPod software

Solution:

- Download and install the latest software version for your iPod (see Apple.com).

Technical Support

If you are having other problems with Drive + Play, please contact us at:

1 – (516) – 255 – HKHK (4545)

Or on the Web at:

www.harmankardon.com

TECHNICAL SPECIFICATIONS

Dimensions of Electronics Enclosure:
6" (152.0mm) x 1-1/4" (32.4mm) x 2-5/8" (66.4mm) (W x H x D)

Maximum Mounting Diameter of Text Display:
1-13/16" (46.2mm)

Maximum Mounting Diameter of Control Knob:
1-13/16" (45.9mm)

Fuse Rating: 2A

Nominal Current Requirement with iPod Connected: 500mA

Line Output Voltage: 1V

Maximum Auxiliary Input Voltage: 1V

Audio Input and Output Jacks: 3.5mm stereo mini-plug

All features and specifications are subject to change without notice.

Harman Kardon and Harman International are registered trademarks, and Drive + Play is a trademark, of Harman International Industries, Incorporated.

Apple and iPod are registered trademarks of Apple Computer, Inc.

Information for the User

This device complies with Part 15 of the FCC Rules. Operation is subject to the following two conditions: (1) This device may not cause harmful interference, and (2) this device must accept any interference received, including interference that may cause undesired operation.

This equipment has been tested and found to comply with the limits for Class B Digital Device, pursuant to Part 15 of the FCC Rules. These limits are designed to provide reasonable protection against harmful interference in a residential installation. This equipment generates and can radiate radio frequency energy and, if not installed and used in accordance with the instructions, may cause harmful interference to radio communications. However, there is no guarantee that interference will not occur in a particular installation. If this equipment does cause harmful interference to radio or television reception, which can be determined by turning the equipment off and on, the user is encouraged to try to correct the interference by one or more of the following measures:

- Reorient or relocate the receiving antenna.
- Increase the separation between the equipment and receiver.
- Connect the equipment into an outlet on a circuit different from that to which the receiver is connected.
- Consult the dealer or an experienced radio/TV technician for help.

Any changes or modifications not expressly approved by the party responsible for compliance could void the user's authority to operate the equipment.

harman/kardon®

drive + play™

250 Crossways Park Drive, Woodbury, New York 11797
www.harmankardon.com
© 2005 Harman International Industries, Incorporated. All rights reserved.
Part No. 950-0081-001 revB

A Harman International® Company