MATRIX

Strong • Smart • Beautiful

S7xi
S7xe
S5x
S3x

STEPPER OWNER'S MANUAL

3 IMPORTANT PRECAUTIONS
9 STEPPER ASSEMBLY
19 LOCATION & SETUP
21 TROUBLESHOOTING & MAINTENANCE
25 STEPPER OPERATION
45 STEPPER WORKOUTS
51 PRODUCT SPECIFICATIONS

IMPORTANT PRECAUTIONS

SAVE THESE INSTRUCTIONS

When using a Stepper, basic precautions should always be followed, including the following: Read all instructions before using this product. It is the responsibility of the owner to ensure that all users of this product are adequately informed of all warnings and precautions. If you have any questions after reading this guide, contact Customer Tech Support at the number listed on the back panel of the OWNER'S MANUAL.

This product is intended for commercial use. To ensure your safety and protect the equipment, read all instructions before operating.

MX15_S3x_5x_7xe_7xi_OM_Rev1_7_DES.indd 2-3 1/30/15 4:14 PM

DANGER

TO REDUCE THE RISK OF ELECTRICAL SHOCK:

Always unplug the unit from the electrical outlet immediately after using, before cleaning, performing maintenance and putting on or taking off parts.

WARNING

TO REDUCE THE RISK OF BURNS, FIRE, ELECTRICAL SHOCK OR INJURY TO PERSONS:

- An appliance should never be left unattended when plugged in. Unplug the entertainment equipment from outlet when not in use and before putting on or taking off parts.
- This product must be used for its intended purpose described in this Owner's Manual.
- This unit should not be used by persons weighing more than specified in the OWNER'S MANUAL SPECIFICATIONS SECTION. Failure to comply will void the warranty.
- To prevent electrical shock, never drop or insert any object into any opening.
- Do not remove side covers. Service should only be done by an authorized service technician.
- Never operate the Stepper with the air opening blocked. Keep the air opening clean, free, of lint, hair and the like.
- Never operate the product if it has a damaged cord or plug, if it is not working properly, if it has been damaged, or immersed in water. Return the unit to a service center for examination and repair.
- Do not carry this unit by entertainment equipment power cord or use cord as handle.
- Keep any of the entertainment equipment power cords away from heated surfaces
- Keep hands and loose clothing away from moving parts.
- Close supervision is necessary when the Stepper is used by or near children or disabled persons.
- Do not use outdoors.
- Do not operate where aerosol (spray) products are being used or where oxygen is being administered.
- Connect this Stepper to a properly grounded outlet only.
- To disconnect, turn all entertainment controls to the off position, then remove plug from outlet.
- Keep power cord away from heated surfaces. Do not carry this unit by its supply cord or use the cord as a handle.

WARNING

- Do not use other attachments that are not recommended by the manufacturer. Attachments may cause injury.
- Disconnect all power before servicing or moving the equipment. To clean, wipe surfaces down with soap and slightly damp cloth only; never use solvents. (See MAINTENANCE)
- The unit should never be left unattended when plugged in. Unplug from outlet when not in use, and before putting on or taking off parts.
- Do not operate under blanket or pillow. Excessive heating can occur and cause fire, electric shock, or injury to persons.
- At NO time should pets or children under the age of 14 be closer to the unit than 10 feet.
- At NO time should children under the age of 14 use the unit.
- Incorrect or excessive exercise may cause injury. If you experience any kind of pain, including but not limited to chest pains, nausea, dizziness, or shortness of breath, stop exercising immediately and consult your physician before continuing.
- Do not wear clothes that might catch on any part of the unit.
- Always wear athletic shoes while using this equipment.
- Do not jump on the unit.
- At no time should more than one person be on unit while in operation.
- Children over the age of 14 or disabled persons should not use the unit without adult supervision.
- Never operate the unit if it has a damaged cord or plug, if it is not working properly, if it has been dropped or damaged, or immersed in water. Return the unit to a service center for examination and repair.
- To disconnect, turn all controls to the off position, then remove plug from outlet.
- Do not remove the console covers unless instructed by Customer Tech Support. Service should only be done by an authorized service technician.
- This unit is not equipped with a free wheel. Pedal speed should be reduced in a controlled manner.
- Heart rate monitoring systems may be inaccurate.
- Over exercising may result in serious injury or death.
- If you feel faint, stop exercising immediately.
- This device complies with Part 15 of the FCC Rules.
  Operation is subject to the following two conditions: (1) this device may not cause harmful interference, and (2) this device must accept any interference received, including interference that may cause undesired operation.
  This device contains transmitter module FCC ID: PPD-AR5BHB116
- Any changes or modifications not expressly approved by the party responsible for compliance could void the user's authority to operate this equipment.

MX15_S3x_5x_7xe_7xi_OM_Rev1_7_DES.indd 4-5 1/30/15 4:14 PM

CAUTION **CONSULT A PHYSICIAN BEFORE USING THIS EQUIPMENT. READ OWNER'S MANUAL BEFORE USE.**

It is essential that your unit is used only indoors, in a climate controlled room. If your unit has been exposed to colder temperatures or high moisture climates, it is strongly recommended that the unit is warmed up to room temperature before first time use. Failure to do so may cause premature electronic failure.

DEDICATED CIRCUIT AND ELECTRICAL INFO

A "Dedicated Circuit" means that each outlet you plug into should not have anything else running on that same circuit. The easiest way to verify this is to locate the main circuit breaker box, and turn off the breaker(s) one at a time. Once a breaker has been turned off, the only thing that should not have power to it are the units in question. No lamps, vending machines, fans, sound systems, or any other item should lose power when you perform this test.

Non-looped (isolated) neutral/grounding means that each circuit must have an individual neutral/ground connection coming from it, and terminating at an approved earth ground. You cannot "jumper" a single neutral/ground from one circuit to the next.

ELECTRICAL REQUIREMENTS

For your safety and to ensure good unit performance, the ground on this circuit must be non-looped (isolated). Please refer to NEC article 210-21 and 210-23. Any alterations to the standard power cord provided could void all warranties of this product.

The S3x, S5x and S7xe are designed to be self powered and do not require an external power supply source to operate. Without an external power supply, the console's start-up time may be delayed. Add-on TV's and other console accessories will increase the time needed for start-up. An external power supply will ensure power is provided to the console at all times and is recommended when add-on accessories are used.

For units with an integrated TV (like the 7xe and 7xi), the TV power requirements are included in the unit. An RG6 coaxial cable with 'F Type' compression fittings on each end will need to be connected to the cardio unit and the video source. Additional power requirements are not needed for the add-on digital TV (3x and 5x). For units with an add-on PCTV (3x and 5x), the TV power requirements are separate.

NOTE: ALL UNITS WITH VIRTUAL ACTIVE™ MUST BE POWERED!

110 V UNITS

All Matrix 3x, 5x, 7xe and 7xi 110 V Steppers require the use of a 100-125 V, 60 Hz and a 15 A "Dedicated Circuit", with a non-looped (isolated) neutral/ground for power. This outlet should be a NEMA 5-15R and have the same configuration as the plug. No adapter should be used with this product. Steppers can be daisy-chained together with up to 4 units per 15 A dedicated circuit. Matrix daisy-chain cord adapters are sold separately.

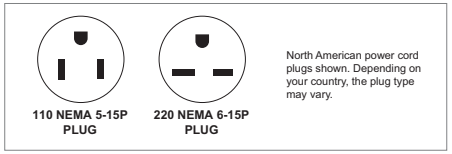

220 V UNITS

All Matrix 3x, 5x, 7xe and 7xi 220 V Steppers require the use of a 216-250 V, 50 Hz and a 15 A "Dedicated Circuit", with a non-looped (isolated) neutral/ground for power. This outlet should be a NEMA 6-15R and have the same configuration as the plug. No adapter should be used with this product. These Steppers can be daisy-chained together with up to 4 units per dedicated 15 A circuit. Matrix daisy-chain cord adapters are sold separately.

GROUNDING INSTRUCTIONS

The unit must be grounded. If it should malfunction or breakdown, grounding provides a path of least resistance for electric current to reduce the risk of electric shock. The unit is equipped with a cord having an equipment-grounding conductor and a grounding plug. The plug must be plugged into an appropriate outlet that is properly installed and grounded in accordance with all local codes and ordinances. If the user does not follow these grounding instructions, the user could void the Matrix limited warranty.

ADDITIONAL ELECTRICAL INFO

In addition to the dedicated circuit requirement, the proper gauge wire must be used from the circuit breaker box, to each outlet that will have the maximum number of units running off of it. If the distance from the circuit breaker box to each outlet, is 100 ft (30.5 m) or less, then 12 gauge wire should be used. For distances greater than 100 ft (30.5 m) from the circuit breaker box to the outlet, a 10 gauge wire should be used.

ENERGY SAVING / LOW-POWER MODE

All units are configured with the ability to enter into an energy saving / low-power mode when the unit has not been in use for a specified period of time. Additional time may be required to fully reactivate this unit once it has entered the low-power mode. This energy saving feature may be enabled or disabled from within the 'Manager Mode' or 'Engineering Mode.'

ADD-ON PCTV (3X AND 5X)

A 15 A or 20 A "Dedicated Circuit" with a non-looped (isolated) neutral/ground is required. Each PCTV requires at least 1.2 A of current. No more than 12 PCTVs should be used for each 15 A circuit and no more than 16 PCTVs should be used for each 20 A circuit. The power outlet should have the same configuration as the plug. No adapter should be used with this product. An RG6 coaxial cable with 'F Type' compression fittings will need to be connected between the video source and each add-on PCTV unit.

ADD-ON DIGITAL TV (3X AND 5X)

Additional power requirements are not needed for the add-on digital TV. An RG6 coaxial cable with 'F Type' compression fittings will need to be connected between the video source and each add-on digital TV unit.

MX15_S3x_5x_7xe_7xi_OM_Rev1_7_DES.indd 6-7 1/30/15 4:14 PM

BATTERY CHARGE (3X, 5X ONLY)

The Stepper saves its battery charge by moving into a shutdown mode whenever **STEP FASTER** appears on the display. If the user does not maintain a step rate above 35 steps per minute, then a 30-second shutdown process begins.

When the battery voltage is low, **LOW BATTERY** appears on the display if the unit is moving into the shutdown mode. The following situation is the time to recharge the battery:

- If no one has used the unit for an extended period of time, the battery may need recharging.
- The unit continues to function with a low battery; however, user and program information is lost once the user stops.

If the battery must be recharged, use the optional power adapter charging unit. The charger should be connected to the Stepper for a minimum of eight hours to ensure a thorough charge. After a completion of charge, the battery light turns from red into green (see illustration). If **LOW BATTERY** still appears on the display after a full charge, the battery could be extinct. Please check with an authorized service technician for replacing the battery.

CAUTION: The battery stored inside the unit contains hazardous materials to the environment. Proper disposal of the battery is required by the local law.

DANGER

Improper connection of the equipment-grounding conductor can result in a risk of electric shock. Check with a qualified electrician or serviceman if you are in doubt as to whether the product is properly grounded. Do not modify the plug provided with the product. If it will not fit the outlet, have a proper outlet installed by a qualified electrician.

WARNING:

Failure to follow these specifications can cause damage to your product and can void the warranty.

Connect this exercise product to a properly grounded outlet only.

Never operate product with a damaged cord or plug even if it is working properly. Never operate any product if it appears damaged, or has been immersed in water. Contact Customer Tech Support for replacement or repair.

- All video and power outlets must be functional the day of delivery / assembly of the product. The client is responsible for any additional installation charges associated with return visits.
- Electrical supply may fluctuate in your area. To ensure stable performance of the product, use the proper gauge wire.

STEPPER ASSEMBLY

WARNING

There are several areas during the assembly process that special attention must be paid. It is very important to follow the assembly instructions correctly and to make sure all parts are firmly tightened. If the assembly instructions are not followed correctly, the unit could have parts that are not tightened and will seem loose and may cause irritating noises. To prevent damage to the unit, the assembly instructions must be reviewed and corrective actions should be taken.

Before proceeding, find the unit's frame serial number located near the on/off switch as shown in the illustration and enter it in the space provided below. The console serial number is located on a barcode sticker on the console, near the connection between the console and the mast.

FRAME SERIAL NUMBER LOCATION

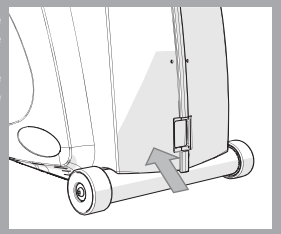

ENTER YOUR SERIAL NUMBERS AND MODEL NAME IN THE BOXES BELOW:

FRAME SERIAL NUMBER:

CONSOLE SERIAL NUMBER:

MODEL NAME:

MATRIX	

CONSOLE SERIAL NUMBER LOCATION

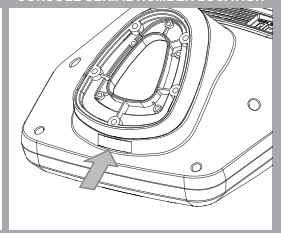

» Use the information above for initial setup and when calling for service.

INCLUDED **FASTENERS**

Qty:	Sketch:	Part Name:	Bag:
8		SOCKET HEAD BOLT (M8x16L)	White
8		LOCK WASHER	White
2		SOCKET HEAD BOLT (M8x25L)	Blue
4		LOCK WASHER	Black
4		BUTTON HEAD BOLT (M8x40L)	Black
2		LOCK WASHER	Yellow
2		BUTTON HEAD BOLT (M8x45L)	Yellow
2		SCREW SET	Orange

Qty:	Sketch:	Part Name:	Bag:
4		BUTTON HEAD BOLT (M8x16L)	Orange
8		ARC WASHER	Orange
3		LOCK WASHER	Green
3		BUTTON HEAD BOLT (M8x16L)	Green
4		BUTTON HEAD BOLT (M5x15L)	Red

REQUIRED **TOOLS**

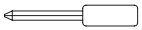

PHILLIPS DRIVER (6x130mm)

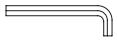

5mm ALLEN WRENCH

6mm ALLEN WRENCH

BEFORE YOU **BEGIN**

Prior to assembling the unit, unpack all of the contents of the box and make sure that all necessary components are present. Review the contents of the hardware package for completeness.

Contact Matrix Customer Service at 1(866) 693-4863 to report any missing items.

Please make sure that the power plug is not plugged into the wall outlet while completing the following procedure.

To ensure correct assembly of the unit, carefully read and follow all assembly steps.

MX15_S3x_5x_7xe_7xi_OM_Rev1_7_DES.indd 10-11 1/30/15 4:14 PM

ASSEMBLY **STEP 1**

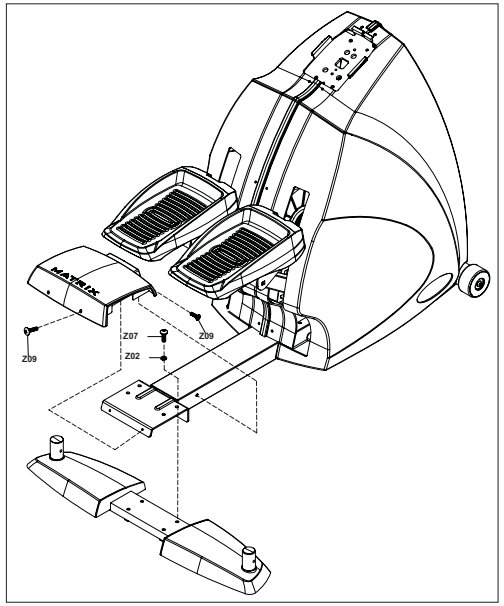

BLACK HARDWARE BAG :			**RED HARDWARE BAG** :		
Z07	BUTTON HEAD BOLT (M8x40L)	4	Z09	BUTTON HEAD BOLT (M5x15L)	4
Z02	LOCK WASHER	4			

A Open BLACK AND RED HARDWARE BAGS.

B Attach the STABILIZER TUBE to the MAIN FRAME using 2 BOLTS (A), 2 SPRING WASHERS (B) and 2 ARC WASHERS (C) on each side.

ASSEMBLY **STEP 2**

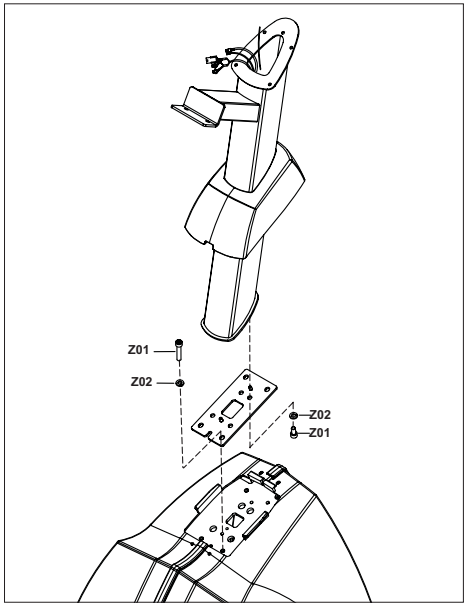

WHITE HARDWARE BAG CONTENTS		
Z01	SOCKET HEAD BOLT(M8x16L)	Qty: 8
Z02	LOCK WASHER	Qty: 8

A Open WHITE HARDWARE BAG.

B Attach MANUAL INCLINE LIFT LEVER to GUIDE RAIL SET using 4 BOLTS (D), 4 FLAT WASHERS (E), 4 SPRING WASHERS (F) and 4 NUTS (G).

C Align GUIDE RAIL SET with MAIN FRAME as shown.

D Lift up on the MANUAL INCLINE LIFT LEVER and place it in one of the holes inside the MAIN FRAME.

E Attach the GUIDE RAIL SET to the MAIN FRAME using 4 BOLTS (G), 4 FLAT WASHERS (H), 4 SPRING WASHERS (I) and 4 NUTS (J).

MX15_S3x_5x_7xe_7xi_OM_Rev1_7_DES.indd 12-13 1/30/15 4:14 PM

ASSEMBLY **STEP 3**

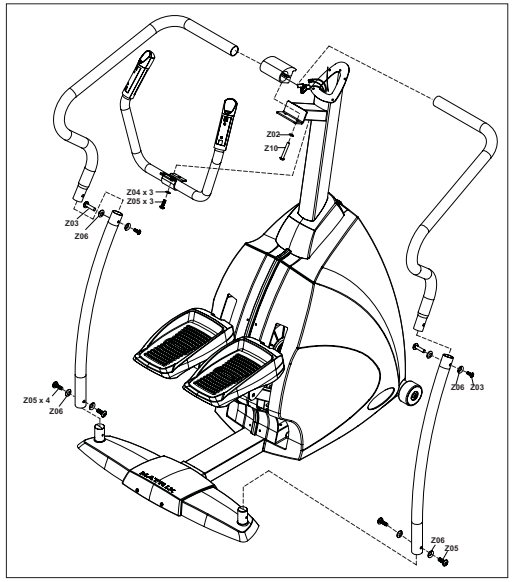

ORANGE HARDWARE BAG:

Z03	SCREW SET	2
Z05	BUTTON HEAD BOLT (M8x16L)	4
Z06	ARC WASHER	8

YELLOW HARDWARE BAG:

Z10	BUTTON HEAD BOLT (M8x45L)	2
Z02	LOCK WASHER	3

GREEN HARDWARE BAG:

Z04	LOCK WASHER	3
Z05	BUTTON HEAD BOLT (M8x16L)	3

A Open ORANGE, YELLOW AND GREEN HARDWARE BAGS.

B Attach the GUIDE RAIL SET to the MAIN FRAME using 4 BOLTS (F), 4 SPRING WASHERS (E) and 4 FLAT WASHERS (D).

C Attach the GUIDE RAIL SET to the INCLINE BRACKET using 4 BOLTS (G), 4 FLAT WASHERS (H), 4 SPRING WASHERS (I) and 4 NUTS (J).

D S3X MODELS: Skip page 23 and continue on page 24.

S5X, S7XE & S7XI ASSEMBLY **STEP 4**

7XE (SHOWN) / 7XI, 5X CONSOLE ASSEMBLY

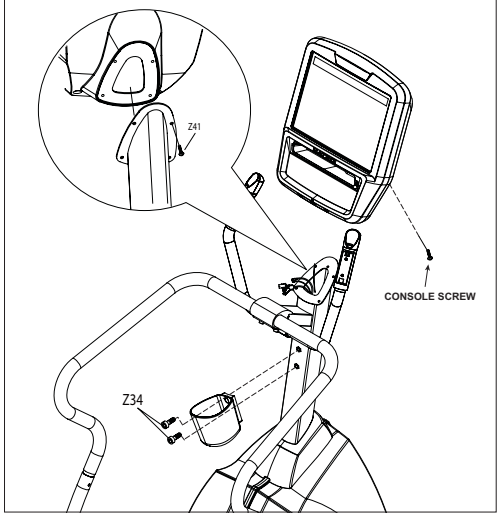

BLUE HARDWARE BAG CONTENTS :

Z34	SOCKET HEAD BOLT(M8x25L)	Qty: 2

S5X, S7XE AND S7XI MODELS ONLY.

A Open BLUE HARDWARE BAG.

B Carefully pull the CONSOLE CABLE through the CONSOLE MAST using the twist tie located inside the CONSOLE MAST.

C Attach CONSOLE MAST to MAIN FRAME using PRE-INSTALLED BOLTS AND WASHERS.

D Slide WAVY WASHER (L) over CRANK followed by PEDAL ARM as shown. Rest PEDAL ARM WHEEL on GUIDE RAIL.

E Attach the PEDAL ARM to the CRANK using 1 FLAT WASHER (K), 1 SPRING WASHER (B) and 1 BOLT (M).

F Repeat steps D–E on the opposite side of the stepper.

S5x / S7xe / S7xi ASSEMBLY COMPLETE!

MX15_S3x_5x_7xe_7xi_OM_Rev1_7_DES.indd 14-15 1/30/15 4:14 PM

S3X ASSEMBLY **STEP 4**

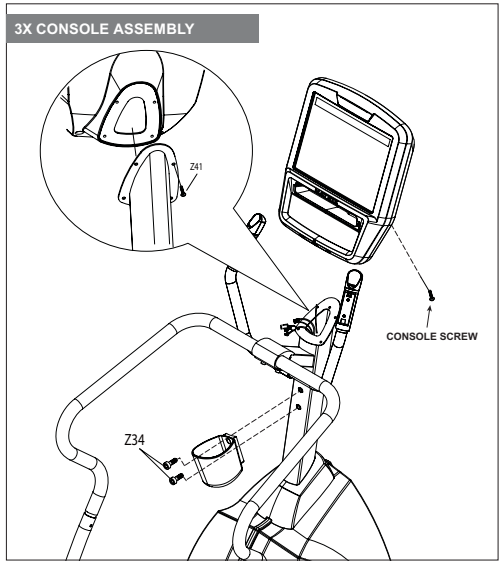

BLUE HARDWARE BAG CONTENTS :

Z34 **SOCKET HEAD BOLT(M8x25L) Qty: 2**

A Open BLUE HARDWARE BAG.

B Carefully pull the CONSOLE CABLE through the CONSOLE MAST using the twist tie located inside the CONSOLE MAST.

C Attach CONSOLE MAST to MAIN FRAME using PRE-INSTALLED BOLTS AND WASHERS.

D Slide WAVY WASHER (L) over CRANK followed by PEDAL ARM as shown. Rest PEDAL ARM WHEEL on GUIDE RAIL.

E Attach the PEDAL ARM to the CRANK using 1 FLAT WASHER (K), 1 SPRING WASHER (B) and 1 BOLT (M).

F Repeat steps D–E on the opposite side of the stepper.

S3x ASSEMBLY COMPLETE!

MX15_S3x_5x_7xe_7xi_OM_Rev1_7_DES.indd 16-17 1/30/15 4:14 PM

LOCATION & SETUP

MX15_S3x_5x_7xe_7xi_OM_Rev1_7_DES.indd 18-19 1/30/15 4:14 PM

LOCATION OF THE UNIT

Place the unit on a level and stable surface away from direct sunlight. The intense UV light can cause discoloration on the plastics. Locate your unit in an area with cool temperatures and low humidity. Please leave a clear zone behind the unit that is at least 24” (600 mm). This zone must be clear of any obstruction and provide the user a clear exit path from the machine. Do not place the unit in any area that will block any vent or air openings. The unit should not be located in a garage, covered patio, near water or outdoors.

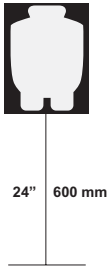

WARNING

Our equipment is heavy, use care and additional help if necessary when moving. Failure to follow these instructions could result in injury.

LEVELING THE UNIT

Locate a level, stable surface to position the Stepper. The Stepper has leveling feet located under the foot support. If your Stepper wobbles in the location where you intended to use it, loosen the lock nut on the adjusting foot and adjust the feet until stable. Once level, lock the adjusting feet by tightening the lock nut to the frame.

BEFORE USING THE UNIT PERFORM INITIAL SETUP.

TROUBLESHOOTING & MAINTENANCE

MX15_S3x_5x_7xe_7xi_OM_Rev1_7_DES.indd 20-21 1/30/15 4:14 PM

RECOMMENDED CLEANING TIPS

Preventative maintenance and daily cleaning will prolong the life and look of your equipment.

A Use a soft, clean cotton cloth. DO NOT use paper towels to clean surfaces on the stepper. Paper towels are abrasive and can damage surfaces.

B Use a mild soap and damp cloth. DO NOT use ammonia based cleaner or alcohol. This will cause discoloring of the aluminum and plastics it comes into contact with.

C Do not pour water or cleaning solutions on any surface. This could cause electrocution.

D Wipe the console, heart rate grip, handles, foot pads and handlebars after each use.

For cleaning 7xe and 7xi displays, use distilled water in an atomizer spray bottle. Spray distilled water onto soft, clean, dry cloth and wipe display until clean and dry. For very dirty displays, adding vinegar is recommended.

CAUTION: Be sure to have proper assistance to install and move the unit in order to avoid injury or damage.

CHECK FOR DAMAGED PARTS

DO NOT use any equipment that is damaged or has worn or broken parts. Use only replacement parts supplied by Matrix Fitness.

MAINTAIN LABELS AND NAMEPLATES.
Do not remove labels for any reason. They contain important information. If unreadable or missing, contact Matrix Fitness Systems for a replacement. 1-866-693-4863, www.matrixfitness.com

MAINTAIN ALL EQUIPMENT
Preventative maintenance is the key to smooth operating equipment, as well as keeping the user's liability to a minimum. Maintain a clean area around the equipment, free from dust and dirt. Equipment needs to be inspected at regular intervals. Defective components must be replaced immediately. Improperly working equipment must be kept out of use until it is repaired. Ensure that any person(s) making adjustments or performing maintenance or repair of any kind is qualified to do so. Matrix Fitness Systems will provide service and maintenance training at our corporate facility upon request or in the field if proper arrangements are made.

CARE AND MAINTENANCE

HOW DO I CLEAN MY MACHINE?

Clean with soap and water cleaners only. Never use solvents on plastic parts. Cleanliness of your stepper and its operating environment will keep maintenance problems and service calls to a minimum. For this reason, Customer Tech Support recommends that the following preventive maintenance schedule be followed.

DAILY

- Unplug the unit. Clean entire machine using water and a mild soap or other Matrix approved solution (cleaning agents should be alcohol and ammonia free).

QUARTERLY

- Check all connecting joint areas for tightness of bolt assemblies.
- For 7xe consoles, enter service mode and select 'test'. Select 'touch calibration' and then select 'start'. Follow the on-screen prompts and touch the screen where indicated.

CONSOLE RESPONSIVENESS ISSUES (CONSOLE REBOOT):

FOR 7XE CONSOLES

Press and HOLD the Channel Up and Channel Down Button until you hear a Beep. Your console will reset.

MX15_S3x_5x_7xe_7xi_OM_Rev1_7_DES.indd 22-23 1/30/15 4:14 PM

MATRIX ASSET MANAGEMENT

The Asset Management system is a feature available on all 5x, 7x, 7xe, and 7xi machines designed to allow remote monitoring of cardio equipment.

This web-based feature provides users with the ability to log in from anywhere with internet connectivity and check on the status of all their equipment. The site provides information including serial numbers, time/distance totals, software versions, and a history of any error codes that the unit has shown.

The system will send email notifications for any error messages that occur on the equipment, notifying both Matrix Fitness customer support and the facility.

To provide the best experience possible, Matrix Fitness Asset Management also allows a user to create a service request ticket in the event that there is a problem with a piece of equipment.

Additionally, service guides, parts lists, and unit drawings for each machine are available through the Asset Management site.

Asset Management site: **am.matrixfitness.com**

STEPPER OPERATION

MX15_S3x_5x_7xe_7xi_OM_Rev1_7_DES.indd 24-25 1/30/15 4:14 PM

POWER

If your unit is powered by a power supply, the power must be plugged into the power jack, which is located in the front of the machine near the stabilizer tube. Some units have a power switch, located next to the power jack. Make sure it is in the ON position. Unplug cord when not in use.

⚠ WARNING

Never operate product if it has a damaged cord or plug, if it is not working properly, if it has been damaged, or immersed in water. Contact Customer Tech Support for examination and repair.

MOUNTING THE STEPPER

1) Stand behind the unit.
2) While holding both of the rear arm handles, place one foot on the corresponding footpad. Wait until the footpad comes to a stop at the bottom of the stroke.
3) Then place your other foot on the opposite pedal.

PROPER USAGE

Your unit offers a variety of foot positions. Moving your foot to the forward most position of the foot pad increases your step height, which will create a feel similar to a step machine. Placing your foot toward the back of the foot pad decreases your step height and creates more of a gliding feel, similar to a smooth walk or run. Always make sure your entire foot is secured on the foot pad. The pedal motion is dependent.

To determine proper workout position, stand on the pedal with your foot on the center of the pedal. Keep your knees slightly bent at all times.

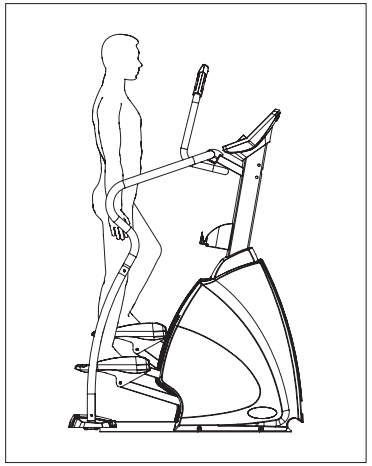

MX15_S3x_5x_7xe_7xi_OM_Rev1_7_DES.indd 26-27 1/30/15 4:14 PM

USING THE HEART RATE FUNCTION

The unit is equipped with heart rate pulse grips.

The heart rate function on this product is not a medical device. While heart rate grips can provide a relative estimation of your actual heart rate, they should not be relied on when accurate readings are necessary. Some people, including those in a cardiac rehab program, may benefit from using an alternate heart rate monitoring system like a chest or wrist strap. Various factors, including movement of the user, may affect the accuracy of your heart rate reading. The heart rate reading is intended only as an exercise aid in determining heart rate trends in general. Please consult your physician.

PULSE GRIPS

Place the palm of your hands directly on the grip pulse handlebars. Both hands must grip the bars for your heart rate to register. It takes 5 consecutive heart beats (15-20 seconds) for your heart rate to register. When gripping the pulse handlebars, do not grip tightly. Holding the grips tightly may elevate your blood pressure. Keep a loose, cupping hold. You may experience an erratic readout if consistently holding the grip pulse handlebars. Make sure to clean the pulse sensors to ensure proper contact can be maintained.

WIRELESS HEART RATE RECEIVER

When used in conjunction with a **wireless chest transmitter**, your heart rate can be transmitted wirelessly to the unit and displayed on the console.

Prior to wearing the wireless chest transmitter on your chest, moisten the two rubber electrodes with water. Center the chest strap just below the breast or pectoral muscles, directly over your sternum, with the logo facing out. NOTE: The chest strap must be tight and properly placed to receive an accurate and consistent readout. If the chest strap is too loose, or positioned improperly, you may receive an erratic or inconsistent heart rate readout.

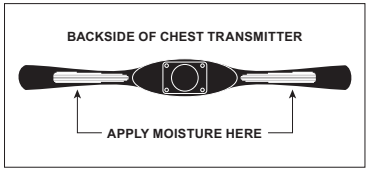

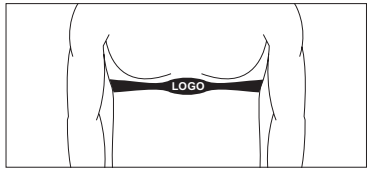

WARNING!

Heart rate monitoring systems may be inaccurate. Over exercising may result in serious injury or death. If you feel faint, stop exercising immediately.

MX15_S3x_5x_7xe_7xi_OM_Rev1_7_DES.indd 28-29 1/30/15 4:14 PM

3X CONSOLE DESCRIPTION

The Matrix machine is inspected before it is packaged. It is shipped in two pieces: the base and the console. Carefully unpack the unit and dispose of the box material. Note: There is a thin protective sheet of clear plastic on the overlay of the console that should be removed before use.

A) **WORKOUT KEYS:** Simple program view and selection buttons.

B) **GO:** One Touch Start.

C) **ENTER:** To confirm each program setting.

D) **UP/DOWN TIME:** Use to adjust workout time.

E) **UP/DOWN LEVEL:** Use to adjust level selection.

F) **STOP:** Ends workout and shows workout summary data.

G) **COOL DOWN:** Puts the console into Cool Down mode.

H) **TOGGLE DISPLAY:** Cycles between 3 or 4 rows of workout information displayed in LED window. The console will automatically cycle between the workout information if the Toggle Display button is pushed and held down for 3 seconds.

MX15_S3x_5x_7xe_7xi_OM_Rev1_7_DES.indd 30-31 1/30/15 4:14 PM

5X CONSOLE DESCRIPTION

The Matrix machine is inspected before it is packaged. It is shipped in two pieces: the base and the console. Carefully unpack the unit and dispose of the box material. Note: There is a thin protective sheet of clear plastic on the overlay of the console that should be removed before use.

A) **WORKOUT KEYS:** Simple program view and selection buttons.

B) **GO:** One Touch Start.

C) **ENTER:** To confirm each program setting.

D) **UP/DOWN TIME:** Easy information and time adjustment.

E) **UP/DOWN LEVEL:** Easy information and level selection.

F) **STOP:** Ends workout and shows workout summary data.

G) **TOGGLE DISPLAY:** Cycles between 2 or 4 rows of workout information displayed in LED window. The console will automatically cycle between the workout information if the Toggle Display button is pushed and held down for 3 seconds.

H) **NUMBER KEYPAD:** Workout data input for workout setup. Level adjustment during workout.

I) **COOL DOWN:** Puts the Ascent into Cool Down mode.

J) **LANGUAGE:** Select Language.

K) **FAN:** Allows for fan speed selection (fan has three operating speeds.)

MX15_S3x_5x_7xe_7xi_OM_Rev1_7_DES.indd 32-33
1/30/15 4:14 PM

7XE CONSOLE DESCRIPTION

The Matrix machine is inspected before it is packaged. It is shipped in two pieces: the base and the console. Carefully unpack the unit and dispose of the box material. Note: There is a thin protective sheet of clear plastic on the overlay of the console that should be removed before use.

The 7xe has a fully integrated touch screen display. All information required for workouts is explained on screen. Exploration of the interface is highly encouraged. The information explaining how to program for various workouts will give an explanation about the contents of each screen on the 7xe.

A) **GO:** One Touch Start.

B) **STOP** (displayed on-screen during workout)**:** Ends workout and shows workout summary data.

C) **COOL DOWN** (displayed on-screen during workout)**:** Puts unit into Cool Down mode. Cool Down time is dependent on the length of the workout. Workouts 19 minutes and shorter will have a cool down length of 2 minutes. Workouts 20 minutes and longer will have a cool down length of 5 minutes.

7XE ENTERTAINMENT ZONE

D) **IPOD®:** Will take the user directly to the iPod screen to allow for iPod control and playlist selection.

E) **VOLUME UP/DOWN:** Adjusts the volume output through headphones.

F) **CC/MUTE:** Mutes sound and turns closed captioning on or off.

G) **NUMBER KEYPAD:** Allows for easy number inputs.

H) **CHANNEL UP/DOWN:** Allows for channel selection on the integrated console TV.

I) **DISPLAY MODE:** Allows user to cycle through console display options, iPod, TV or profile display.

J) **LAST CHANNEL:** Allows the user to cycle between the current channel and the previous channel they were viewing.

MX15_S3x_5x_7xe_7xi_OM_Rev1_7_DES.indd 34-35 1/30/15 4:14 PM

HURESAC-7XI-C CONSOLE DESCRIPTION

The Matrix machine is inspected before it is packaged. It is shipped in two pieces: the base and the console. Carefully unpack the unit and dispose of the box material. Note: There is a thin protective sheet of clear plastic on the overlay of the console that should be removed before use.

The 7xi has a fully integrated touch screen display. All information required for workouts is explained on screen. Exploration of the interface is highly encouraged. The information explaining how to program for various workouts will give an explanation about the contents of each screen on the 7xi.

A) GO: One Touch Start.

B) STOP (displayed on-screen during workout)**:** Ends workout and shows workout summary data.

C) COOL DOWN (displayed on-screen during workout)**:** Puts unit into Cool Down mode. Cool Down time is dependent on the length of the workout. Workouts 19 minutes and shorter will have a cool down length of 2 minutes. Workouts 20 minutes and longer will have a cool down length of 5 minutes.

7XI ENTERTAINMENT ZONE

D) IPOD®: Will take the user directly to the iPod screen to allow for iPod control and playlist selection.

E) VOLUME UP/DOWN: Adjusts the volume output through headphones.

F) CC/MUTE: Mutes sound and turns closed captioning on or off.

G) NUMBER KEYPAD: Allows for easy number inputs.

H) CHANNEL UP/DOWN: Allows for channel selection on the integrated console TV.

I) DISPLAY MODE: Allows user to cycle through console display options, iPod, TV or profile display.

J) LAST CHANNEL: Allows the user to cycle between the current channel and the previous channel they were viewing.

K) RFID SENSOR: Wireless login access location (optional add-on feature).

MX15_S3x_5x_7xe_7xi_OM_Rev1_7_DES.indd 36-37 1/30/15 4:14 PM

GO SCREEN

- Touch the **WORKOUT PROGRAM** of your choice and follow the on-screen prompts or touch **GO** to begin working out.

7XI CONSOLE OPERATION

GETTING STARTED
(For help or more information, touch **?**.)

WELCOME SCREEN

- Touch the **USER** button to sign-in with your XID.
- Touch the **GUEST** button to workout anonymously.
- Touch the **REGISTER** button to create a new XID.

USER SIGN-IN*

1) Enter your **XID** and touch ✓ or ❯.
2) Enter your **PASSCODE** and touch ✓ or ❯.
3) A screen will appear showing you are signed-in successfully.

* For RFID-equipped consoles, touch RFID device to ((•)) .

REGISTER A NEW USER

1) Touch **REGISTER**, select **IMPERIAL** or **METRIC** and enter a unique **XID** that is ten digits in length. Touch ✓ or ❯ to continue.
2) Enter your **EMAIL ADDRESS** and touch the ❯ to continue.
3) Enter your 4-digit **PASSCODE** and touch **ENTER** or ❯ to continue.
4) Re-enter your 4-digit **PASSCODE** and touch **ENTER** or ❯ to continue.
5) Select your **GENDER**, enter your **DATE OF BIRTH** (Day -Month-Year) and touch ✓ or ❯ to continue.
6) Enter your **WEIGHT** and touch ✓ or ❯ to continue.
7) Touch ❮ to go back and change any of your entries. Touch ❯ to complete registration.
8) Your account is now active and you are signed-in.

FEATURED CONTENT

- When the workout starts, featured content is displayed. Touch ⌂ to access homescreen.

HOMESCREEN

- The **USERNAME** or **GUEST** is shown in the upper right-hand corner.
- Touch ✋ to change **WORKOUT STATISTICS** displayed at the bottom of the screen.
- Touch a **FLAG** to change the language.
- Touch ⌂ to go back to the home screen whenever you're using an app.
- Touch 🔊 to switch between different audio source (TV, iPod, Virtual Active, Media Player, etc.).
- Touch ((•)) to see WiFi or Ethernet connectivity.
- Touch ♥ to display your heart rate.
- Touch ⚠ to display current weather warnings in your area.
- Touch ⌨ or 🌡 buttons to change intensity level and/or speed and to alternate between two (user defined) intensity levels. NOTE: the user will need to confirm a change in speed by touching the flashing 'OK' button on the screen.
- Touch ■ to end your workout.
- Touch ⏸ to temporarily stop your workout and touch ▶ to resume. NOTE: After ⏸ is touched, speed, incline and resistance levels be reset.
- Touch 🌡 to enter cool down mode. Cool down lasts for a few minutes while reducing the workout intensity, allowing your body to recover from your workout.
- Touch 🔒 to prevent accidental screen touches from being implemented. Touch it again to unfreeze the screen and browse through features and make intentional changes to your entertainment or workout.
- Touch ✿ to turn the fan on. There are three fan speeds (low, medium, high).

HOMESCREEN:

7XI APPS AND ENTERTAINMENT

- **FEATURED CONTENT** - Displays featured videos, music and workouts according to frequently-accessed content.
- **SIMPLE** - Workout stats are displayed in 3 customizeable windows.
- **VIRTUAL ACTIVE** - Your workout info is displayed and Virtual Active courses are shown. With Virtual Active, escape the confines of an ordinary workout as you or walk or run through exotic destinations.
- **IPOD** - Connect and control audio and video files on-screen.
- **FACEBOOK** - Browse your Facebook page while you work out.
- **TWITTER** - Access your Twitter feed while you work out.
- **TV** - Watch live TV.
- **WEATHER** - Get local weather info.
- **YOUTUBE** - Browse and watch YouTube videos while you work out.
- **FACILITY** - View Facility event schedule and other info.
- **CHANGE WORKOUT** - Select a different workout without stopping your current workout.

VIRTUAL ACTIVE SCREEN:

- **MEDIA PLAYER** - Connect and control audio and video files on-screen via USB port.
- **ON DEMAND TV** - Watch On Demand video content while you work out.
- **ON DEMAND MUSIC** - Watch On Demand music content while you work out.
- **MYFITNESSPAL** - Lose weight with MyFitnessPal, the fastest and easiest to use calorie counter.

NOTE: Availability of apps is subject to change. Additional apps may become available.

Made for iPod iPhone

"Made for iPod" and "Made for iPhone" mean that an electronic accessory has been designed to connect specifically to iPod or iPhone, respectively, and has been certified by the developer to meet Apple performance standards. Apple is not responsible for the operation of this device or its compliance with safety and regulatory standards. Please note that the use of this accessory with iPod or iPhone may affect wireless performance. iPod and iPhone are trademarks of Apple Inc., registered in the U.S. and other countries.

NIKE + IPOD INSTRUCTIONS (7XE CONSOLES ONLY)

REQUIREMENTS

Nike + iPod – compatible iPod or iPhone (See www.apple.com/nikeplus for more information).

Before syncing your Apple device, you must first create a free Nike + iPod account at www.nikerunning.com and have the Nike + iPod App turned on in the settings of your device.

GETTING STARTED

1) Before connecting your Apple device, you must first turn on Nike + iPod within the settings of the device.
2) Dock your Apple device and wait for authentication to complete. This may take up to 10 seconds. After authentication is complete, your iPod-specific console controls will be active (see next page).
3) If your iPod or iPhone is Nike Plus compatible, your workout will begin recording automatically to your Nike + iPod – compatible device.
4) When your workout is complete, your workout data will be recorded to your Nike Plus compatible device.
5) Log into your Nike Running account to review and track your workouts.

Made for iPod

"Made for iPod" means that an electronic accessory has been designed to connect specifically to iPod and has been certified by the developer to meet Apple performance standards. Apple is not responsible for the operation of this device or its compliance with safety and regulatory standards. iPod is a trademark of Apple Inc., registered in the U.S. and other countries.

MX15_S3x_5x_7xe_7xi_OM_Rev1_7_DES.indd 40-41 1/30/15 4:14 PM

MANAGER MODE AND ENGINEERING MODE

3X AND 5X CONSOLES:

These sections allow users to manipulate default settings for the machines. It may be accessed by pressing the **Level Up/ Level Down** keys simultaneously for 5 seconds. To change a setting, press "**Enter**" on the keypad under 'Manager Mode' or 'Engineering Mode' and use the level buttons and numeric keypad to enter a category and change the values. Pressing "**Enter**" again will save the change. Pressing "**Back**" or "**Stop**" will bring you to the previous menu. To exit Manager or Engineering Mode, hold "**Stop**" down for 5 seconds. Below is a list of the settings that can be changed.

MANAGER MODE SETTINGS:		ENGINEERING MODE SETTINGS:	
Default Level	Software Version	Disable Errors	Club ID
Default Age	Speed/Distance Mode	Speed Units	ErP Time
Default Weight	Out of Order	Machine Type	AM System
Default Time	Gender	Power Save Time	Audio Source
Accumulated Time	Sound Mode	Pause Time	Volume Control
Accumulated Floors	Maximum Time	Serial Number	
Language		Adjust Resistance	

7XE AND 7XI CONSOLE:

These sections allow users to manipulate default settings for the machines. Manager Mode may be accessed by pressing **ENTER, 1, 0, 0, 1, Enter** on the keypad. Engineering Mode may be accessed by pressing **ENTER, 2, 0, 0, 1, Enter** on the keypad. The screen shots on the next page show what you will see when you enter Manager Mode and Engineering Mode.

This console has a fully integrated touch screen display. Lightly touch the screen and use the intuitive interface to adjust the settings. Any and all changes made will be saved when the "**home**" button is touched in the upper left-hand corner of the screen. Touching the "**home**" button will exit manager or engineering mode and return you to the main screen. It is not necessary to touch this button after each setting is changed.

7XE - MANAGER AND ENGINEERING MODE

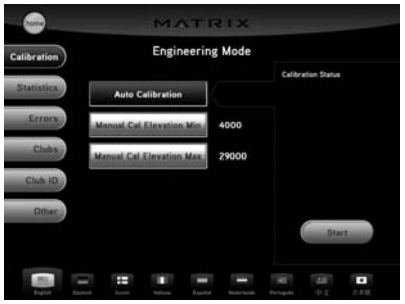

7XI - MANAGER AND ENGINEERING MODE

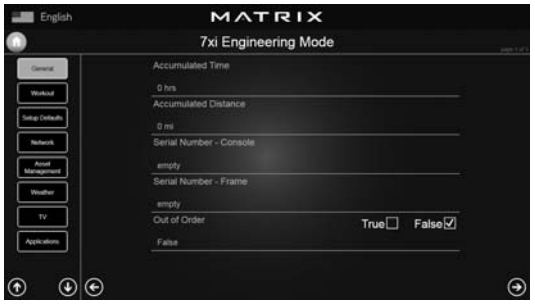

MX15_S3x_5x_7xe_7xi_OM_Rev1_7_DES.indd 42-43
1/30/15 4:14 PM

STEPPER WORKOUTS

NOTE:
The individual human power required to perform an exercise may be different than the mechanical power displayed.

These exercise devices are Class A products. These products display the power input into the exercise device in watts. These products have been tested to ensure that the watts displayed on the console is accurate to within +/- 10 %. The user is not required to calibrate these exercise devices.

The testing parameters used to determine watts accuracy were:

- Training speed of 120 SPM (60 SPM per foot).
- Range of motion (step height) of approximately 200 mm.
- Intensity level set to the following levels: 1, 5, 10, 20, and maximum level.

MX15_S3x_5x_7xe_7xi_OM_Rev1_7_DES.indd 44-45 1/30/15 4:14 PM

WORKOUT DESCRIPTIONS

QUICK START OPERATION

Press the **GO** button and the machine will enter into a manual mode of operation. All energy expenditure values will be calculated using the default weight measurement.

MANUAL WORKOUT OPERATION

Manual is a workout that allows you to manually adjust the intensity level values at anytime. The manual workout also contains a setup screen which allows you to input your weight to help calculate a more accurate caloric burn rate.

To enter into this workout on the 3x or 5x, use the following guidelines. To enter into this workout on the 7xe and 7xi, follow the on-screen prompts.

1) Choose **MANUAL** by selecting the manual workout button and press **ENTER**.
2) Enter the desired intensity level using the **ARROW KEYS** or **NUMBER KEYPAD** and press **ENTER**.
3) Enter the desired workout length using the **ARROW KEYS** or the **NUMBER KEYPAD** and press **ENTER**.
4) Enter user weight (user weight is used to calculate the caloric expenditure value-providing an accurate weight helps to ensure an accurate caloric expenditure rating for each user) using the **ARROW KEYS** or the **NUMBER KEYPAD** and press **ENTER**.
5) Press **GO** to begin the workout.

LANDMARKS

This program allows you to climb to the top of famous destinations from around the world.

To enter into this workout on the 7xi, press **LANDMARKS** and follow the on-screen prompts.

NOTE: Programs may vary based on model and default settings.

LEVEL BASED PROGRAMS

Your Matrix machine offers a variety of level-based workouts to challenge users of all fitness levels. The following information will briefly explain the workout and how to program the machine for each workout selection.

ROLLING HILLS WORKOUT OPERATION

Rolling hills is a level-based workout that automatically adjusts the intensity level to simulate walking or running up hills.

To enter into this workout on the 3x or 5x, use the following guidelines. To enter into this workout on the 7xe and 7xi, follow the on-screen prompts.

1) Choose **ROLLING HILLS** by selecting the rolling hills workout button and press **ENTER**.
2) Enter the desired intensity level using the **ARROW KEYS** or the **NUMBER KEYPAD** and press **ENTER**.
3) Enter the desired workout length using the **ARROW KEYS** or the **NUMBER KEYPAD** and press **ENTER**.
4) Enter user weight (user weight is used to calculate the caloric expenditure value-providing an accurate weight helps to ensure an accurate caloric expenditure rating for each user) using the **ARROW KEYS** or the **NUMBER KEYPAD** and press **ENTER**.
5) Press **GO** to begin the workout.

INTERVAL TRAINING

Interval Training is a level-based workout that automatically adjusts the intensity in a series of low- to high-intensity levels.

To enter into this workout on the 3x or 5x, use the following guidelines. To enter into this workout on the 7xe and 7xi, follow the on-screen prompts.

1) Choose **INTERVAL TRAINING** by selecting the interval training workout button and press **ENTER**.
2) Enter the desired intensity level using the **ARROW KEYS** or the **NUMBER KEYPAD** and press **ENTER**.
3) Enter the desired workout length using the **ARROW KEYS** or the **NUMBER KEYPAD** and press **ENTER**.
4) Enter user weight (user weight is used to calculate the caloric expenditure value-providing an accurate weight helps to ensure an accurate caloric expenditure rating for each user) using the **ARROW KEYS** or the **NUMBER KEYPAD** and press **ENTER**.
5) Press **GO** to begin the workout.

NOTE: Programs may vary based on model and default settings.

MX15_S3x_5x_7xe_7xi_OM_Rev1_7_DES.indd 46-47 1/30/15 4:14 PM

WORKOUT DESCRIPTIONS

USER DEFINED PROGRAMS (RANDOM)

There are 20 workout profiles in random mode. Profile will change each time random button is pressed.

To enter into this workout on the 3x or 5x, use the following guidelines. To enter into this workout on the 7xe and 7xi, follow the on-screen prompts.

1) Press the **RANDOM** button and choose a workout profile.
2) Enter your desired intensity level using the **ARROW KEYS** or **NUMBER KEYPAD** and press **ENTER**.
3) Enter your desired Time using the **ARROW KEYS** or **NUMBER KEYPAD** and press **ENTER**.
4) Enter your Weight using the **ARROW KEYS** or **NUMBER KEYPAD** and press **ENTER**.
5) Press **GO** to begin the workout.

FAT BURN WORKOUT OPERATION

Fat burn is a level-based workout that is designed to help users burn fat through various resistance changes.

To enter into this workout on the 3x or 5x, use the following guidelines. To enter into this workout on the 7xe and 7xi, follow the on-screen prompts.

1) Choose **FAT BURN** by selecting the fat burn workout button and press **ENTER**.
2) Enter the desired intensity level using the **ARROW KEYS** or the **NUMBER KEYPAD** and press **ENTER**.
3) Enter the desired workout length using the **ARROW KEYS** or the **NUMBER KEYPAD** and press **ENTER**.
4) Enter user weight (user weight is used to calculate the caloric expenditure value-providing an accurate weight helps to ensure an accurate caloric expenditure rating for each user) using the **ARROW KEYS** or the **NUMBER KEYPAD** and press **ENTER**.
5) Press **GO** to begin the workout.

NOTE: Programs may vary based on model and default settings.

HEART RATE CONTROL WORKOUT OPERATION

Your Matrix machine offers a heart rate control workout mode. The heart rate control workout mode allows the user to program their desired heart rate zone and the machine will automatically adjust the level based upon the user's heart rate. The heart rate zone is calculated using the following equation: (220-Age) * % = target heart rate zone. The user must wear a telemetric heart rate monitor or continually hold onto the contact heart rate grips for this workout.

To enter into this workout on the 3x or 5x, use the following guidelines. To enter into this workout on the 7xe and 7xi, follow the on-screen prompts.

1) Choose **HEART RATE** by selecting the target heart rate workout button and press **ENTER**.
2) Enter age using the **ARROW KEYS** or the **NUMBER KEYPAD** and press **ENTER**.
3) Enter the desired percent of maximum heart rate using the **ARROW KEYS** and press **ENTER**.
4) Enter the desired workout length using the A**RROW KEYS** or the **NUMBER KEYPAD** and press **ENTER**.
5) Enter user weight (user weight is used to calculate the caloric expenditure value, providing an accurate weight helps to ensure an accurate caloric expenditure rating for each user) using the **ARROW KEYS** or the **NUMBER KEYPAD** and press **ENTER**.
6) Press **GO** to begin the workout.

FITNESS TEST

This test measures cardiovascular fitness and proves an estimated sub-maximal VO2 result. It is based on power output according to ACSM standards and was developed by the Cooper Institute (© www.cooperinstitute.org)

User SPMs must remain between 60-80 SPM during the test.

The test will end when the user can no longer maintain this speed. Use of a heart rate strap is optional but provides more data.

The test starts at a low intensity level and gradually increases in intensity (difficulty) every 2 minutes. As it increases, the user must maintain 60-80SPM to advance to the next level. The test could take upwards of 30+ minutes for very fit individuals. Once the test ends a recovery period (cool down) will begin and the user's results are calculated and displayed. Results are based on the number of stages completed:

Stage Complete:
1 Well Below Average
2 Well Below Average
3 Below Average
4 Below Average
5 Average
6 Average
7 Above Average
8 Above Average
9+ Well Above Average

NOTE: Programs may vary based on model and default settings.

MX15_S3x_5x_7xe_7xi_OM_Rev1_7_DES.indd 48-49 1/30/15 4:14 PM

WORKOUT DESCRIPTIONS

CONSTANT WATTS

This program allows you to vary your cadence or SPM and the machine's resistance will adjust accordingly to your selected goal. The quicker your stride the less resistance for the goal selected.

To enter into this workout on the 3x or 5x, use the following guidelines. To enter into this workout on the 7xe and 7xi, follow the on-screen prompts.

1) Press **CONSTANT WATTS**
2) Enter your desired **WATT** using the **ARROW KEYS** or **NUMBER KEYPAD** and press **ENTER**.
3) Enter your desired **TIME** using the **ARROW KEYS** or **NUMBER KEYPAD** and press **ENTER**.
4) Enter your **WEIGHT** using the **ARROW KEYS** or **NUMBER KEYPAD** and press **ENTER**.
5) Press **GO** to begin the workout.

NOTE: Programs may vary based on model and default settings.

PRODUCT SPECIFICATIONS

	S7xi STEPPER	S7xe STEPPER	S5x STEPPER	S3x STEPPER
TECH SPECS				
OVERALL DIMENSIONS L X W X H	45" X 31" X 70.5" 114.3CM X 78.7CM X 179.1CM	45" X 31" X 70.5" 114.3CM X 78.7CM X 179.1CM	45" X 31" X 70.5" 114.3CM X 78.7CM X 179.1CM	45" X 31" X 70.5" 114.3CM X 78.7CM X 172.7CM
MAXIMUM USER WEIGHT	400 LBS/182 KG	400 LBS/182 KG	400 LBS/182 KG	400 LBS/182 KG
WEIGHT	259 LBS/117.7 KG	259 LBS/117.7 KG	255 LBS/116 KG	258 LBS/117.2 KG
SHIPPING WEIGHT	276 LBS/125.5 KG	276 LBS/125.5 KG	272 LBS/123.6KG	274 LBS/124.5 KG

NORTH AMERICAN SPECIFICATIONS SHOWN. SPECIFICATIONS SUBJECT TO CHANGE. FOR LATEST SPECIFICATIONS PLEASE VISIT WWW.MATRIXFITNESS.COM

MX15_S3x_5x_7xe_7xi_OM_Rev1_7_DES.indd 50-51 1/30/15 4:14 PM

MX15_S3x_5x_7xe_7xi_OM_Rev1_7_DES.indd 52-53 1/30/15 4:14 PM

7XI - WHAT'S NEW

SPRINT 8®

The 20-minute Sprint 8® workout program is a science-based sprint cardio training plan that stimulates the natural release of human growth hormone, which burns fat and builds lean muscle in just 20 minutes, 3 times a week. In two hospital-based studies, participants who performed the Sprint 8 workout for 8 weeks lost, on average, 27% of their body fat.

To keep users on track, the Sprint 8® workout program provides a Sweat Score after every sprint. The Sweat Score is a measure of effort, and users should aim to match or exceed their previous Sweat Score with each subsequent sprint.

Now available on the Treadmill T7xi, Ascent Trainer A7xi, Suspension Elliptical E7xi, Hybrid Bike H7xi, Upright Bike U7xi, and Recumbent Bike R7xi

LANDMARKS

The Landmarks workout program lets you climb the height of the Eiffel Tower, Statue of Liberty, Christ the Redeemer Statue, Empire State Building, One World Trade Center, Tower of Pisa, Great Pyramid of Giza, St. Basil's Cathedral, Burj Khalifa, Taj Mahal and Taipei 101.

Now available on the ClimbMill C7xi and Stepper S7xi

WIRELESS LOGIN

RFID-equipped 7xi consoles allow users to login using their compatible RFID tag.*

* This optional add-on feature is sold separately. Supported standards with carrier frequency of 13.56 MHz include; ISO 14443 A, ISO 15693, ISO 14443 B, Sony Felica, Inside Contactless (HID iClass), and LEGIC RF.

©2015 Johnson Health Tech. 150225

1-866-693-4863
www.matrixfitness.com

Matrix Fitness
1600 Landmark Drive,
Cottage Grove, WI 53527

MX15_S3x_5x_7xe_7xi_OM_Rev1_7_DES.indd 54 1/30/15 4:14 PM