MATRIX

Strong • Smart • Beautiful

T7xi
T7xe
T5x

TREADMILL OWNER'S MANUAL

3 IMPORTANT PRECAUTIONS
9 TREADMILL ASSEMBLY
19 LOCATION & SETUP
25 TROUBLESHOOTING & MAINTENANCE
29 TREADMILL OPERATION
45 TREADMILL WORKOUTS
54 PRODUCT SPECIFICATIONS

IMPORTANT PRECAUTIONS

SAVE THESE INSTRUCTIONS

When using a treadmill, basic precautions should always be followed, including the following: Read all instructions before using this treadmill. It is the responsibility of the owner to ensure that all users of this treadmill are adequately informed of all warnings and precautions. If you have any questions after reading this guide, contact Customer Tech Support at the number listed on the back panel of the OWNER'S MANUAL.

This product is intended for commercial use. To ensure your safety and protect the equipment, read all instructions before operating.

MX15_T5x_T7xe_T7xi_OM_Rev2_2_DES.indd 2-3 2/2/15 9:57 AM

DANGER

TO REDUCE THE RISK OF ELECTRICAL SHOCK:

Always unplug the treadmill from the electrical outlet immediately after using, before cleaning, performing maintenance and putting on or taking off parts.

WARNING

TO REDUCE THE RISK OF BURNS, FIRE, ELECTRICAL SHOCK OR INJURY TO PERSONS:

- Incorrect or excessive exercise may cause injury. If you experience any kind of pain, including but not limited to chest pains, nausea, dizziness, or shortness of breath, stop exercising immediately and consult your physician before continuing.
- When exercising, always maintain a comfortable pace.
- Do not wear clothes that might catch on any part of the treadmill.
- Always wear athletic shoes while using this equipment.
- Do not jump on the treadmill.
- At no time should more than one person be on treadmill while in operation.
- This treadmill should not be used by persons weighing more than specified in the OWNER'S MANUAL SPECIFICATIONS SECTION. Failure to comply will void the warranty.
- Disconnect all power before servicing or moving the equipment. To clean, wipe surfaces down with soap and slightly damp cloth only; never use solvents. (See MAINTENANCE)
- The treadmill should never be left unattended when plugged in. Unplug from outlet when not in use, and before putting on or taking off parts.
- Do not operate under blanket or pillow. Excessive heating can occur and cause fire, electric shock, or injury to persons.
- Connect this exercise product to a properly grounded outlet only.
- At NO time should pets or children under the age of 14 be closer to the treadmill than 10 feet.
- At NO time should children under the age of 14 use the treadmill.

WARNING

- Children over the age of 14 or disabled persons should not use the treadmill without adult supervision.
- Use the treadmill only for its intended use as described in the treadmill guide and owner's manual.
- Do not use other attachments that are not recommended by the manufacturer. Attachments may cause injury.
- Never operate the treadmill if it has a damaged cord or plug, if it is not working properly, if it has been dropped or damaged, or immersed in water. Call Customer Tech Support for examination and repair.
- Keep power cord away from heated surfaces. Do not carry this unit by its supply cord or use the cord as a handle.
- Never operate the treadmill with the air opening blocked. Keep the air opening clean, free of lint, hair, and the like.
- To prevent electrical shock, never drop or insert any object into any opening.
- Do not operate where aerosol (spray) products are being used or when oxygen is being administered.
- To disconnect, turn all controls to the off position, then remove plug from outlet.
- Do not use treadmill in any location that is not temperature controlled, such as but not limited to garages, porches, pool rooms, bathrooms, car ports or outdoors. Failure to comply may void the warranty.
- Do not remove the console covers unless instructed by Customer Tech Support. Service should only be done by an authorized service technician.
- To avoid injury, stand on the side rails before starting the treadmill.
- Heart rate monitoring systems may be inaccurate.
- Over exercising may result in serious injury or death.
- If you feel faint, stop exercising immediately.

CAUTION

CONSULT A PHYSICIAN BEFORE USING THIS EQUIPMENT. READ OWNER'S MANUAL BEFORE USE.

It is essential that your treadmill is used only indoors, in a climate controlled room. If your treadmill has been exposed to colder temperatures or high moisture climates, it is strongly recommended that the treadmill is warmed up to room temperature before first time use. Failure to do so may cause premature electronic failure. The initial (default) starting speed is 0.5 mph (0.8 kph). The default starting speed set too high can be dangerous.

MX15_T5x_T7xe_T7xi_OM_Rev2_2_DES.indd 4-5 2/2/15 9:57 AM

DEDICATED CIRCUIT AND ELECTRICAL INFO

A “Dedicated Circuit” means that each outlet you plug into should not have anything else running on that same circuit. The easiest way to verify this is to locate the main circuit breaker box, and turn off the breaker(s) one at a time. Once a breaker has been turned off, the only thing that should not have power to it are the units in question. No lamps, vending machines, fans, sound systems, or any other item should lose power when you perform this test.

Non-looped (isolated) neutral/grounding means that each circuit must have an individual neutral/ground connection coming from it, and terminating at an approved earth ground. You cannot “jumper” a single neutral/ground from one circuit to the next.

ELECTRICAL REQUIREMENTS

For your safety and to ensure good treadmill performance, the ground on this circuit must be non-looped (isolated). Please refer to NEC article 210-21 and 210-23. Your treadmill is provided with a power cord with a plug listed below and requires the listed outlet. Any alterations of this power cord could void all warranties of this product.

For units with an integrated TV (like the 7xe and 7xi), the TV power requirements are included in the unit. An RG6 coaxial cable with ‘F Type’ compression fittings on each end will need to be connected to the cardio unit and the video source. For units with an add-on digital TV (5x only), the machine in which the add-on digital TV is connected to powers the add-on digital TV. Additional power requirements are not needed for the add-on digital TV. For units with an add-on PCTV (5x only), the TV power requirements are separate.

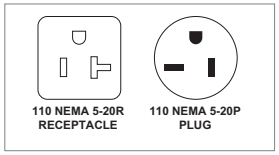

North American power cord plugs shown.
Depending on your country, the plug type may vary.

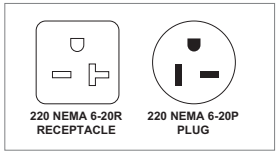

110 V UNITS

All Matrix 5x, 7xe and 7xi 110 V treadmills require the use of a 100-125 V, 60 Hz and a 20 A “Dedicated Circuit”, with a non-looped (isolated) neutral/ground for power. This outlet should be a NEMA 5-20R and have the same configuration as the plug. No adapter should be used with this product.

220 V UNITS

All Matrix 5x, 7xe and 7xi 220 V treadmills require the use of a 216-250 V, 50 Hz and a 20 A “Dedicated Circuit”, with a non-looped (isolated) neutral/ground for power. This outlet should be a NEMA 6-20R and have the same configuration as the plug. No adapter should be used with this product.

GROUNDING INSTRUCTIONS

The treadmill must be grounded. If it should malfunction or breakdown, grounding provides a path of least resistance for electric current to reduce the risk of electric shock. The treadmill is equipped with a cord having an equipment-grounding conductor and a grounding plug. The plug must be plugged into an appropriate outlet that is properly installed and grounded in accordance with all local codes and ordinances. If the user does not follow these grounding instructions, the user could void the Matrix limited warranty.

ADDITIONAL ELECTRICAL INFO

In addition to the dedicated circuit requirement, the proper gauge wire must be used from the circuit breaker box, to each outlet that will have the maximum number of units running off of it. If the distance from the circuit breaker box to each outlet, is 100 ft (30.5 m) or less, then 12 gauge wire should be used. For distances greater than 100 ft (30.5 m) from the circuit breaker box to the outlet, a 10 gauge wire should be used.

ENERGY SAVING / LOW-POWER MODE

All units are configured with the ability to enter into an energy saving / low-power mode when the unit has not been in use for a specified period of time. Additional time may be required to fully reactivate this unit once it has entered the low-power mode. This energy saving feature may be enabled or disabled from within the ‘Manager Mode’ or ‘Engineering Mode.’

ADD-ON PCTV (T5X)

A 15 A or 20 A “Dedicated Circuit” with a non-looped (isolated) neutral/ground is required. Each PCTV requires at least 1.2 A of current (at 110 V or 220 V). No more than 12 PCTVs should be used for each 15 A circuit and no more than 16 PCTVs should be used for each 20 A circuit. The power outlet should have the same configuration as the plug. No adapter should be used with this product. An RG6 coaxial cable with ‘F Type’ compression fittings will need to be connected between the video source and each add-on PCTV unit.

ADD-ON DIGITAL TV (T5X)

Additional power requirements are not needed for the add-on digital TV. An RG6 coaxial cable with ‘F Type’ compression fittings will need to be connected between the video source and each add-on digital TV unit.

MX15_T5x_T7xe_T7xi_OM_Rev2_2_DES.indd 6-7 2/2/15 9:57 AM

DANGER

Improper connection of the equipment-grounding conductor can result in a risk of electric shock. Check with a qualified electrician or serviceman if you are in doubt as to whether the product is properly grounded. Do not modify the plug provided with the product. If it will not fit the outlet, have a proper outlet installed by a qualified electrician.

WARNING

Connect this exercise product to a properly grounded outlet only.

Never operate product with a damaged cord or plug even if it is working properly. Never operate any product if it appears damaged, or has been immersed in water. Contact Customer Tech Support for replacement or repair.

WARNING:

Failure to follow these specifications can cause damage to your product and can void the warranty.

- All video and power outlets must be functional the day of delivery / assembly of the product. The client is responsible for any additional installation charges associated with return visits.
- Electrical supply may fluctuate in your area. To ensure stable performance of the product, use the proper gauge wire.

TREADMILL ASSEMBLY

WARNING

There are several areas during the assembly process that special attention must be paid. It is very important to follow the assembly instructions correctly and to make sure all parts are firmly tightened. If the assembly instructions are not followed correctly, the treadmill could have parts that are not tightened and will seem loose and may cause irritating noises. To prevent damage to the treadmill, the assembly instructions must be reviewed and corrective actions should be taken.

Before proceeding, find the treadmill frame serial number located on a barcode sticker near the on/off power switch and power cord and enter it in the space provided below. The console serial number is located on a barcode sticker on the back of the console near the bottom center.

CONSOLE SERIAL NUMBER LOCATION

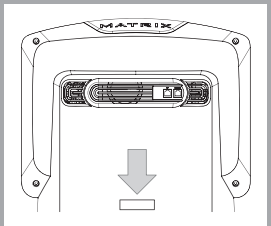

ENTER YOUR SERIAL NUMBERS AND MODEL NAME IN THE BOXES BELOW:

FRAME SERIAL NUMBER:

CONSOLE SERIAL NUMBER:

MODEL NAME:

MATRIX	

FRAME SERIAL NUMBER LOCATION

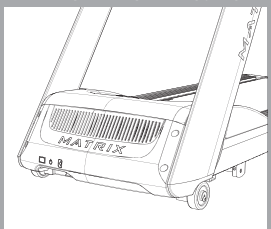

» Use the information above for initial setup and when calling for service.

MX15_T5x_T7xe_T7xi_OM_Rev2_2_DES.indd 8-9 2/2/15 9:57 AM

INCLUDED **FASTENERS & TOOLS**

	Part #:	Part Name:	Outline:	Dimensions:	Quantity:	Bag Color:
10	020090-00	Socket head cap screw		M8 x 20mm	10	Black
14	0000086571	Flat Washer		8.2 x 16 x 2.0T	10	Black
20	0000084935	Left Connection Bracket		SPHC 4.0T	1	
21	0000084936	Right Connection Bracket		SPHC 4.0T	1	
11	004541-AC	Socket Head Cap Screw		M8 x 1.25P x 45 mm	2	White
12	035882-AB	Socket Head Cap Screw		M8 x 1.25P x 75 mm	4	White
14	0000086571	Flat Washer		8.2 x 16 x 2.0T	6	White
17	004539-AD	Socket Head Cap Screw		M8 x 1.25P x 25mm	2	Blue
19	0000088905	Spacer		M8 x 16 x 8	2	Blue
15	004859-AC	Button Socket Head Cap Screw		M8 x 1.25 x 20 mm	6	Red
14	0000086571	Flat Washer		8.2 x 16 x 2.0T	6	Red
13	020072-00	Socket Head Cap Screw		M8 x 1.25 x 60mm	4	Yellow
16	062769-00	Socket Head Cap Screw		M8 x 1.25 x 15mm	2	Yellow
23	0000089835	Ribbed Lock Washer		8.5 x 12.8 x .8/1.3H	6	Yellow
	005394-00	T-Wrench		8mm x 168L	1	

REQUIRED **TOOLS**

8 mm T Wrench

5 mm Allen Wrench

6 mm Allen Wrench

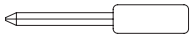

Phillips Screwdriver

BEFORE YOU **BEGIN**

Prior to assembling the unit, unpack all of the contents of the box and make sure that all necessary components are present. Review the contents of the hardware package for completeness.

Contact Matrix Customer Service at 1(866) 693-4863 to report any missing items.

Please make sure that the power plug is not plugged into the wall outlet while completing the following procedure.

To ensure correct assembly of the unit, carefully read and follow all assembly steps.

MX15_T5x_T7xe_T7xi_OM_Rev2_2_DES.indd 10-11 2/2/15 9:57 AM

ASSEMBLY **STEP 1**

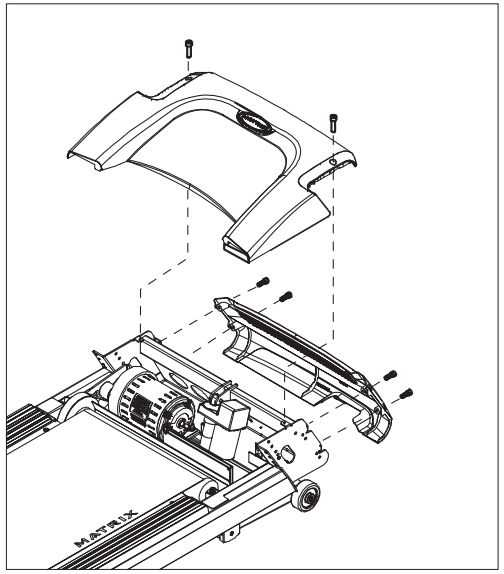

A Remove the **MOTOR COVER** and set aside.The **MOTOR COVER** need to be removed to gain access to the motor compartment so that the wire harness connections can occur.

ASSEMBLY **STEP 2**

BLACK HARDWARE BAG CONTENTS :

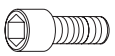

10
SOCKET HEAD CAP SCREW (M8 x 20mm)
Qty: 10

14
FLAT WASHER (6.2 x 12 x 1.6)
Qty: 10

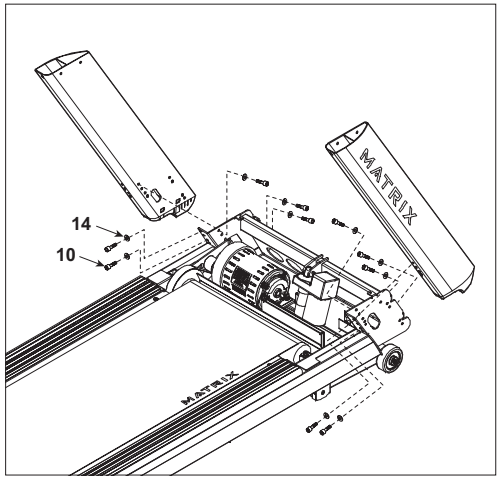

A Open **BLACK HARDWARE BAG**.

B Assemble both the **LEFT AND RIGHT CONSOLE MASTS** to the **TREADMILL BASE** using item **SOCKET HEAD CAP SCREWS (10)** and **FLAT WASHERS (14)**.

MX15_T5x_T7xe_T7xi_OM_Rev2_2_DES.indd 12-13 2/2/15 9:57 AM

ASSEMBLY **STEP 3**

WHITE HARDWARE BAG CONTENTS :

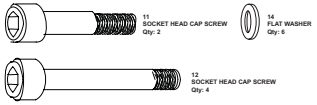

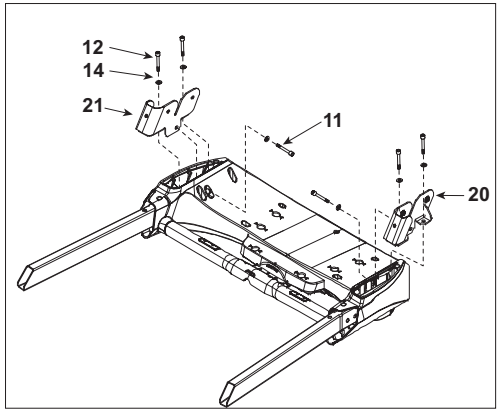

A Open **WHITE HARDWARE BAG**.

B Assemble the **LEFT AND RIGHT BRACKETS (20 AND 21)** to the **CONSOLE BASE** using **SOCKET HEAD CAP SCREWS (12)**, **FLAT WASHERS (14)** and **SOCKET HEAD CAP SCREWS (11)**.

Assembly tip: It is much easier to accomplish this task if the console base is left inside it's shipping container.

ASSEMBLY **STEP 4**

BLUE HARDWARE BAG CONTENTS :

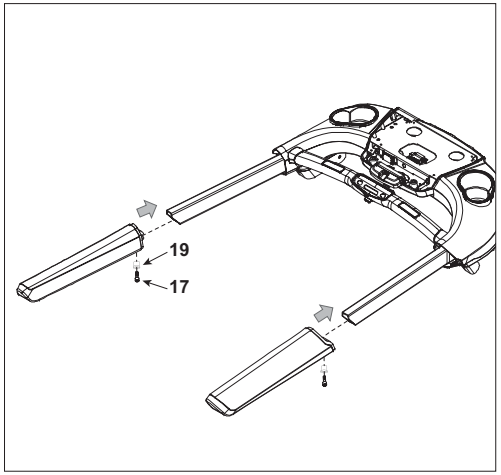

A Open **BLUE HARDWARE BAG**.

B Slide the **URETHANE ARMS** over the steel tubes on the **CONSOLE BASE**.

C Fasten the **URETHANE ARMS** to the steel tubes using **SOCKET HEAD CAP SCREWS (17)** and **SPACERS (19)**.

MX15_T5x_T7xe_T7xi_OM_Rev2_2_DES.indd 14-15 2/2/15 9:58 AM

ASSEMBLY **STEP 5**

RED HARDWARE BAG CONTENTS :

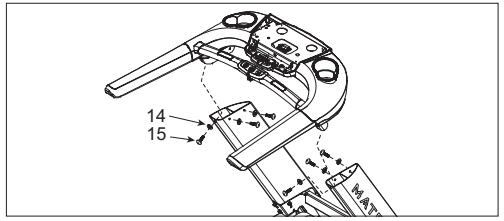

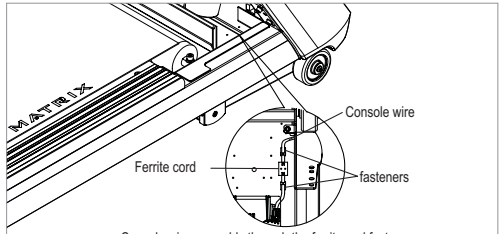

Console wire assembly through the ferrite and fasteners

A Open **RED HARDWARE BAG**.

B Assemble the **CONSOLE BASE** to the **CONSOLE MASTS** using **BUTTON SOCKET HEAD CAP SCREWS (15)** and **FLAT WASHERS (14)**.

C Be sure to route the **CONSOLE CABLES** down the **CONSOLE MAST** through the larger opening in the mast which is closest to the running belt.

D Make all appropriate wire connections within the motor compartment.

ASSEMBLY **STEP 6**

YELLOW HARDWARE BAG CONTENTS :

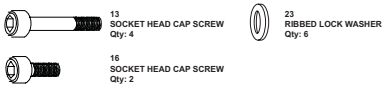

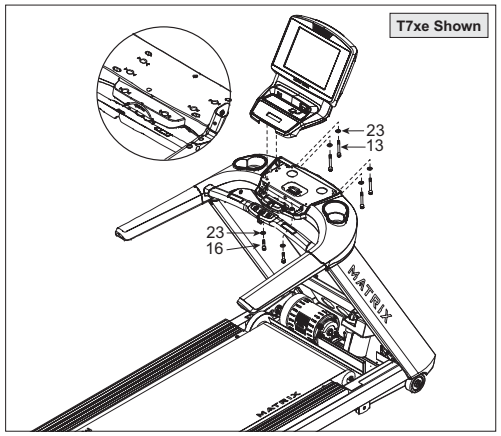

A Open **YELLOW HARDWARE BAG**.

B Make appropriate wire connections to the **FACEPLATE** and then assemble to the **CONSOLE BASE** using **SOCKET HEAD CAP SCREWS (13)**, **RIBBED LOCK WASHERS (23)**, **SOCKET HEAD CAP SCREWS (16)** and **RIBBED LOCK WASHERS (23)**.

C The **SOCKET HEAD CAP SCREWS (16)** are shorter and must be assembled into the holes closest to the running surface.

D All holes applicable to this assembly step can be noted by the embossed arrow next to the hole.

MX15_T5x_T7xe_T7xi_OM_Rev2_2_DES.indd 16-17 2/2/15 9:58 AM

ASSEMBLY **STEP 7**

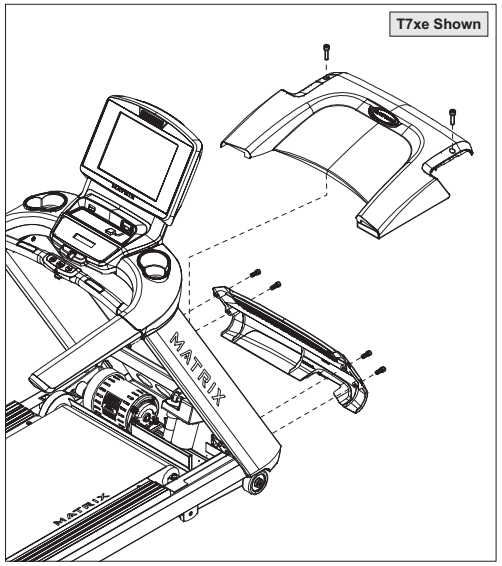

A Replace the **MOTOR COVER.**

ASSEMBLY COMPLETE!

LOCATION & SETUP

MX15_T5x_T7xe_T7xi_OM_Rev2_2_DES.indd 18-19 2/2/15 9:58 AM

LOCATION OF THE TREADMILL

Place the treadmill on a level and stable surface away from direct sunlight. The intense UV light can cause discoloration on the plastics. Locate your treadmill in an area with cool temperatures and low humidity. Please leave a clear zone behind the treadmill that is at least the width of the treadmill and at least 79” (2000 mm) long. This zone must be clear of any obstruction and provide the user a clear exit path from the machine. For ease of access, there should be an accessible space on both sides of the treadmill of at least 24” (600 mm) to allow a user access to the treadmill from either side. Do not place the treadmill in any area that will block any vent or air openings. The treadmill should not be located in a garage, covered patio, near water or outdoors.

WARNING

Our treadmills are heavy. To avoid injury and damage, use care and additional help if necessary when moving.

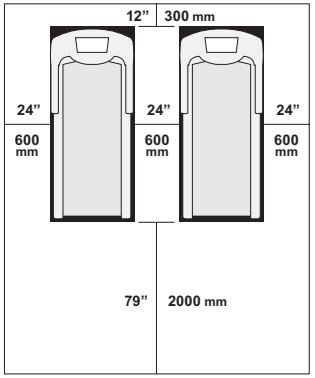

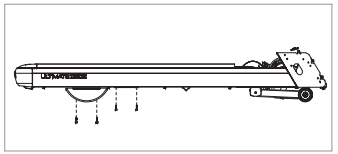

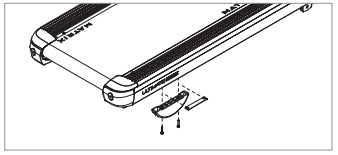

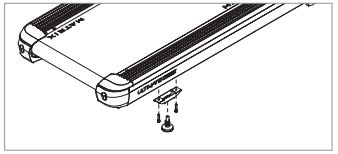

LEVELING THE TREADMILL

Use of shim or adding leveling foot.

NOTE: It is extremely important that the levelers are correctly adjusted for proper operation. An unbalanced unit may cause belt misalignment or other issues. Use of a level is recommended.

Remove the leveling shim provided on the underside of the treadmill. The shim can be found mounted on the underside of the right hand side rail. Remove the rear foot on the side of the treadmill that is resting low. Install the shim as shown above and return the rear foot.

When installing the optional rear leveling foot accessory, remove the existing rear foot. Replace with new leveling foot and fasten to the frame using the existing fasteners that held in the half-moon foot.

BEFORE USING THE TREADMILL

Perform initial setup and calibrate the treadmill using the auto-calibration feature found in ‘Manager Mode’ or ‘Engineering Mode’.

NOTE: DO NOT stand on the belt while the auto-calibration sequence is in progress.

NOTE: DO NOT adjust incline until the initial setup and auto-calibration are completed.

NOTE: DO NOT start the treadmill running belt or press any speed buttons until directed to while tensioning the running belt.

MX15_T5x_T7xe_T7xi_OM_Rev2_2_DES.indd 20-21 2/2/15 9:58 AM

TENSIONING THE RUNNING BELT

After placing the treadmill in the position it will be used, the belt must be checked for proper tension and centering. The belt might need to be adjusted after the first two hours of use. Temperature, humidity, and use cause the belt to stretch at different rates. If the belt starts to slip when a user is on it, be sure to follow the directions below.

1) Locate the two hex head bolts on the rear of the treadmill. The bolts are located at each end of the frame at the back of the treadmill. These bolts adjust the rear belt roller. Do not adjust until the treadmill is on. This will prevent over tightening of one side.

2) The belt should have equal distance on either side between the frame. If the belt is touching one side, do not start the treadmill. Turn the bolts counter clockwise approximately one full turn on each side. Manually center the belt by pushing the belt from side to side until it is parallel with the side rails. Tighten the bolts the same amount as when the user loosened them, approximately one full turn. Inspect the belt for damage.

3) Start the treadmill running belt by pressing the GO buttion. Increase speed to 3 mph (~4.8 kph) and observe the belt position. If it is moving to the right, tighten the right bolt by turning it clockwise ¼ turn, and loosen the left bolt ¼ turn. If it is moving to the left, tighten the left bolt by turning it clockwise ¼ turn and loosen the right ¼ turn. Repeat Step 3 until the belt remains centered for several minutes.

4) Check the tension of the belt. The belt should be very snug. When a person walks or runs on the belt, it should not hesitate or slip. If this occurs, tighten the belt by turning both bolts clockwise ¼ turn. Repeat if necessary.

NOTE: Use the orange strip in the lateral position of the side rails as criteria to confirm the belt is properly centered. It is necessary to adjust the belt until the edge of the belt is parallel to the orange or white strip.

⚠ CAUTION

Do not run belt faster than 3 mph (~4.8 kph) while centering. Keep fingers, hair and clothing away from belt at all times.

Treadmills equipped with side handrails and front handlebar for user support and emergency dismount, press emergency button to stop the machine for emergency dismount.

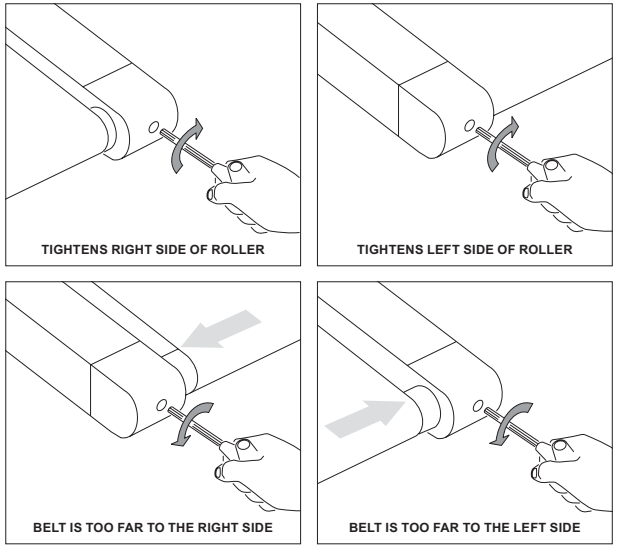

MX15_T5x_T7xe_T7xi_OM_Rev2_2_DES.indd 22-23 2/2/15 9:58 AM

TROUBLESHOOTING & MAINTENANCE

MX15_T5x_T7xe_T7xi_OM_Rev2_2_DES.indd 24-25 2/2/15 9:58 AM

RECOMMENDED CLEANING TIPS

Preventative maintenance and daily cleaning will prolong the life and look of your equipment.

A Use a soft, clean cotton cloth. DO NOT use paper towels to clean surfaces on the treadmill. Paper towels are abrasive and can damage surfaces.

B Use a mild soap and damp cloth. DO NOT use ammonia based cleaner or alcohol. This will cause discoloring of the aluminum and plastics it comes into contact with.

C Do not pour water or cleaning solutions on any surface. This could cause electrocution.

D Wipe the console, heart rate grip, handles and side rails after each use.

E Brush away any wax deposits from the deck and belt area. This is a common occurrence until the wax is worked into the belt material.

F Be sure to remove any obstructions from the path of the elevation wheels including power cords.

G For cleaning 7xe and 7xi displays, use distilled water in an atomizer spray bottle. Spray distilled water onto soft, clean, dry cloth and wipe display until clean and dry. For very dirty displays, adding vinegar is recommended.

CAUTION: Be sure to have proper assistance to install and move the unit in order to avoid injury or damage to the treadmill.

DECK AND BELT REPLACEMENT

One of the most common wear and tear items on a treadmill is the deck and belt combination. If these two items are not properly maintained they can cause damage to other components. This product has been provided with the most advanced maintenance free lubricating system on the market.

WARNING: Do not run the treadmill while cleaning the belt and deck. This can cause serious injury and can damage the machine.

Maintain the belt and deck by wiping the sides of the belt and deck with a clean cloth. The user can also wipe under the belt 2 inches (~51mm) on both sides removing any dust or debris.

The deck can be flipped and reinstalled or replaced by an authorized service technician. Please contact Matrix Fitness Systems for more information.

⚠ WARNING

To remove power from the treadmill, the power cord must be disconnected from the wall outlet.

CHECK FOR DAMAGED PARTS

DO NOT use any equipment that is damaged or has worn or broken parts. Use only replacement parts supplied by Matrix Fitness Systems.

MAINTAIN LABELS AND NAMEPLATES Do not remove labels for any reason. They contain important information. If unreadable or missing, contact Matrix Fitness Systems for a replacement or an authorized service provider.

MAINTAIN ALL EQUIPMENT Preventative maintenance is the key to smooth operating equipment, as well as keeping the user's liability to a minimum. Maintain a clean area around the equipment, free from dust and dirt. Equipment needs to be inspected at regular intervals. Defective components must be replaced immediately. Improperly working equipment must be kept out of use until it is repaired. Ensure that any person(s) making adjustments or performing maintenance or repair of any kind is qualified to do so. Matrix Fitness Systems will provide service and maintenance training at our corporate facility upon request or in the field if proper arrangements are made.

CONSOLE RESPONSIVENESS ISSUES (CONSOLE REBOOT):

FOR 7XE CONSOLES

Press and HOLD the Channel Up and Channel Down Button until you hear a Beep. Your console will reset.

CARE AND MAINTENANCE

HOW DO I CLEAN MY MACHINE?

Clean with soap and water cleaners only. Never use solvents on plastic parts. Cleanliness of your treadmill and its operating environment will keep maintenance problems and service calls to a minimum. For this reason, Customer Tech Support recommends that the following preventive maintenance schedule be followed.

DAILY

- Unplug the treadmill. Clean entire machine using water and a mild soap or other Matrix approved solution (cleaning agents should be alcohol and ammonia free).

MONTHLY

- Unplug the treadmill and remove the motor cover. Check for debris and clean with a dry cloth or small vacuum nozzle.

  WARNING: Do not plug the treadmill in until the motor cover has been reinstalled.

QUARTERLY

- For 7xe consoles, enter service mode and select 'test'. Select 'touch calibration' and then select 'start'. Follow the on-screen prompts and touch the screen where indicated.

MX15_T5x_T7xe_T7xi_OM_Rev2_2_DES.indd 26-27 2/2/15 9:58 AM

MATRIX ASSET MANAGEMENT

The Asset Management system is a feature available on all 5x, 7x, 7xe, and 7xi machines designed to allow remote monitoring of cardio equipment.

This web-based feature provides users with the ability to log in from anywhere with internet connectivity and check on the status of all their equipment. The site provides information including serial numbers, time/distance totals, software versions, and a history of any error codes that the unit has shown.

The system will send email notifications for any error messages that occur on the equipment, notifying both Matrix Fitness customer support and the facility.

To provide the best experience possible, Matrix Fitness Asset Management also allows a user to create a service request ticket in the event that there is a problem with a piece of equipment.

Additionally, service guides, parts lists, and unit drawings for each machine are available through the Asset Management site.

Asset Management site: **am.matrixfitness.com**

TREADMILL OPERATION

MX15_T5x_T7xe_T7xi_OM_Rev2_2_DES.indd 28-29 2/2/15 9:58 AM

CAUTION – RISK OF INJURY TO PERSONS

While you are preparing to use the treadmill, do not stand on the belt. Place your feet on the side rails before starting the treadmill. Start walking on the belt only after the belt has begun to move. Never start the treadmill at a fast running speed and attempt to jump on! In case of an emergency, place both hands on the side arm rests to hold yourself up and place your feet onto the side rails.

USING THE SAFETY KEY

Your treadmill will not start unless the emergency stop button is reset. Attach the clip end securely to your clothing. This safety key is designed to cut the power to the treadmill if you should fall. Check the operation of the safety key every 2 weeks.

WARNING

Never use the treadmill without securing the safety key clip to your clothing. Pull on the safety key clip first to make sure it will not come off your clothing.

PROPER USAGE

Position your feet on the belt, bend your arms slightly and grasp the heart rate sensors (as shown). While running, your feet should be located in the center of the belt so that your hands can swing naturally and without contacting the front handlebars.

Your treadmill is capable of reaching high speeds. Always start off using a slower speed and adjust the speed in small increments to reach a higher speed level. Never leave the treadmill unattended while it is running. When not in use turn the on/off switch to off and unplug the power cord. Make sure to follow the MAINTENANCE schedule in this guide to maintain optimal performance and prevent premature electronic failure. Keep your body and head facing forward. Do not attempt to turn around or look backwards while the treadmill is running. Stop your workout immediately if you feel pain, faint, dizzy or are short of breath.

USING THE HEART RATE FUNCTION

Your unit is equipped with heart rate pulse grips.

The heart rate function on this product is not a medical device. While heart rate grips can provide a relative estimation of your actual heart rate, they should not be relied on when accurate readings are necessary. Some people, including those in a cardiac rehab program, may benefit from using an alternate heart rate monitoring system like a chest or wrist strap. Various factors, including movement of the user, may affect the accuracy of your heart rate reading. The heart rate reading is intended only as an exercise aid in determining heart rate trends in general. Please consult your physician.

PULSE GRIPS

Place the palm of your hands directly on the grip pulse handlebars. Both hands must grip the bars for your heart rate to register. It takes 5 consecutive heart beats (15-20 seconds) for your heart rate to register. When gripping the pulse handlebars, do not grip tightly. Holding the grips tightly may elevate your blood pressure. Keep a loose, cupping hold. You may experience an erratic readout if consistently holding the grip pulse handlebars. Make sure to clean the pulse sensors to ensure proper contact can be maintained.

WARNING!

Heart rate monitoring systems may be inaccurate. Over exercising may result in serious injury or death. If you feel faint, stop exercising immediately.

WIRELESS HEART RATE RECEIVER

When used in conjunction with a **wireless chest transmitter**, your heart rate can be transmitted wirelessly to the unit and displayed on the console.

Prior to wearing the wireless chest transmitter on your chest, moisten the two rubber electrodes with water. Center the chest strap just below the breast or pectoral muscles, directly over your sternum, with the logo facing out. NOTE: The chest strap must be tight and properly placed to receive an accurate and consistent readout. If the chest strap is too loose, or positioned improperly, you may receive an erratic or inconsistent heart rate readout.

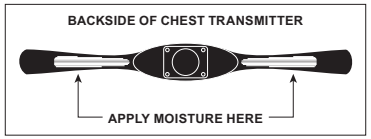

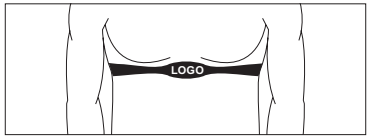

MX15_T5x_T7xe_T7xi_OM_Rev2_2_DES.indd 30-31 2/2/15 9:58 AM

T5X CONSOLE DESCRIPTION

The Matrix machine is inspected before it is packaged. It is shipped in two pieces: the base and the console. Carefully unpack the unit and dispose of the box material. Note: There is a thin protective sheet of clear plastic on the overlay of the console that should be removed before use.

A) **WORKOUT KEYS:** Simple program view and selection buttons. Press Fitness Test button to cycle through available tests.

B) **GO:** One Touch Start.

C) **ENTER:** To confirm each program setting.

D) **UP/DOWN INCLINE:** Adjust incline and make program selections.

E) **UP/DOWN SPEED:** Adjust speed and make program selections.

F) **UP/DOWN TIME:** Adjust time and make program selections.

G) **EMERGENCY STOP / IMMOBILIZATION:** To stop all functions and immobilize the unit. The emergency stop on this treadmill must be returned to its original position in order to allow normal operation of the unit.

H) **STOP:** Ends workout and shows workout summary data.

I) **PAUSE:** Pauses workout. Pause duration can be set in manager or engineering mode.

J) **NUMBER KEYPAD:** Workout data input for workout setup. Speed adjustment during workout.

K) **COOL DOWN:** Puts treadmill into Cool Down mode. Cool Down time is dependent on the length of the workout. Workouts 19 minutes and shorter will have a cool down length of 2 minutes. Workouts 20 minutes and longer will have a cool down length of 5 minutes.

L) **FAN:** Allows for fan speed selection (fan has three operating speeds.)

M) **TOGGLE DISPLAY:** Cycles between 4 rows of workout information displayed in LED window. The console will automatically cycle between the workout information if the Toggle Display button is pushed and held down for 3 seconds.

N) **LANGUAGE:** Select Language.

MX15_T5x_T7xe_T7xi_OM_Rev2_2_DES.indd 32-33 2/2/15 9:58 AM

T7XE CONSOLE DESCRIPTION

The Matrix machine is inspected before it is packaged. It is shipped in two pieces: the base and the console. Carefully unpack the unit and dispose of the box material. Note: There is a thin protective sheet of clear plastic on the overlay of the console that should be removed before use.

The T7xe has a fully integrated touch screen display. All information required for workouts is explained onscreen. Exploration of the interface is highly encouraged. The information explaining how to program for various workouts will give an explanation about the contents of each screen on the T7xe.

A) **GO:** One Touch Start.

B) **STOP:** Ends workout and shows workout summary data.

C) **INCLINE TOGGLES:** Adjust incline during workout.

D) **SPEED TOGGLES:** Adjust speed during workout.

E) **COOL DOWN:** Puts treadmill into Cool Down mode. Cool Down time is dependent on the length of the workout. Workouts 19 minutes and shorter will have a cool down length of 2 minutes. Workouts 20 minutes and longer will have a cool down length of 5 minutes.

F) **EMERGENCY STOP / IMMOBILIZATION:** To stop all functions and immobilize the unit. The emergency stop on this treadmill must be returned to its original position in order to allow normal operation of the unit.

T7XE ENTERTAINMENT ZONE

G) **IPOD®:** Will take the user directly to the iPod screen to allow for iPod control and playlist selection.

H) **VOLUME UP/DOWN:** Adjusts the volume output through headphones.

I) **CC/MUTE:** Mutes sound and turns closed captioning on or off.

J) **NUMBER KEYPAD:** Allows for easy number inputs.

K) **CHANNEL UP/DOWN:** Allows for channel selection on the integrated console TV.

L) **DISPLAY MODE:** Allows user to cycle through console display options, iPod, TV or profile display.

M) **LAST CHANNEL:** Allows the user to cycle between the current channel and the previous channel they were viewing.

MX15_T5x_T7xe_T7xi_OM_Rev2_2_DES.indd 34-35 2/2/15 9:58 AM

T-7XI-C CONSOLE DESCRIPTION

The Matrix machine is inspected before it is packaged. It is shipped in two pieces: the base and the console. Carefully unpack the unit and dispose of the box material. Note: There is a thin protective sheet of clear plastic on the overlay of the console that should be removed before use.

The T7xi has a fully integrated touch screen display. All information required for workouts is explained onscreen. Exploration of the interface is highly encouraged. The information explaining how to program for various workouts will give an explanation about the contents of each screen on the T7xi.

A) GO: One Touch Start.

B) STOP: Ends workout and shows workout summary data.

C) INCLINE TOGGLES: Adjust incline during workout.

D) SPEED TOGGLES: Adjust speed during workout.

E) COOL DOWN: Puts treadmill into Cool Down mode. Cool Down time is dependent on the length of the workout. Workouts 19 minutes and shorter will have a cool down length of 2 minutes. Workouts 20 minutes and longer will have a cool down length of 5 minutes.

F) EMERGENCY STOP / IMMOBILIZATION: To stop all functions and immobilize the unit. The emergency stop on this treadmill must be returned to its original position in order to allow normal operation of the unit.

T7XI ENTERTAINMENT ZONE

G) IPOD®: Will take the user directly to the iPod screen to allow for iPod control and playlist selection.

H) VOLUME UP/DOWN: Adjusts the volume output through headphones.

I) CC/MUTE: Mutes sound and turns closed captioning on or off.

J) NUMBER KEYPAD: Allows for easy number inputs.

K) CHANNEL UP/DOWN: Allows for channel selection on the integrated console TV.

L) DISPLAY MODE: Allows user to cycle through console display options, iPod, TV or profile display.

M) LAST CHANNEL: Allows the user to cycle between the current channel and the previous channel they were viewing.

N) RFID SENSOR: Wireless login access location (optional add-on feature).

MX15_T5x_T7xe_T7xi_OM_Rev2_2_DES.indd 36-37 2/2/15 9:58 AM

GO SCREEN

- Touch the **WORKOUT PROGRAM** of your choice and follow the on-screen prompts or touch **GO** to begin working out.

7XI CONSOLE OPERATION

GETTING STARTED
(For help or more information, touch **?**.)

WELCOME SCREEN

- Touch the **USER** button to sign-in with your XID.
- Touch the **GUEST** button to workout anonymously.
- Touch the **REGISTER** button to create a new XID.

USER SIGN-IN*

1) Enter your **XID** and touch ✓ or ❯.
2) Enter your **PASSCODE** and touch ✓ or ❯.
3) A screen will appear showing you are signed-in successfully.

* For RFID-equipped consoles, touch RFID device to ((•)) .

REGISTER A NEW USER

1) Touch **REGISTER**, select **IMPERIAL** or **METRIC** and enter a unique **XID** that is ten digits in length. Touch ✓ or ❯ to continue.
2) Enter your **EMAIL ADDRESS** and touch the ❯ to continue.
3) Enter your 4-digit **PASSCODE** and touch **ENTER** or ❯ to continue.
4) Re-enter your 4-digit **PASSCODE** and touch **ENTER** or ❯ to continue.
5) Select your **GENDER**, enter your **DATE OF BIRTH** (Day -Month-Year) and touch ✓ or ❯ to continue.
6) Enter your **WEIGHT** and touch ✓ or ❯ to continue.
7) Touch ❮ to go back and change any of your entries. Touch ❯ to complete registration.
8) Your account is now active and you are signed-in.

FEATURED CONTENT

- When the workout starts, featured content is displayed. Touch ⌂ to access homescreen.

HOMESCREEN

- The **USERNAME** or **GUEST** is shown in the upper right-hand corner.
- Touch ✋ to change **WORKOUT STATISTICS** displayed at the bottom of the screen.
- Touch a **FLAG** to change the language.
- Touch ⌂ to go back to the home screen whenever you're using an app.
- Touch 🔊 to switch between different audio source (TV, iPod, Virtual Active, Media Player, etc.).
- Touch ((•)) to see WiFi or Ethernet connectivity.
- Touch ♥ to display your heart rate.
- Touch ⚠ to display current weather warnings in your area.
- Touch ⌨ or 🌡 buttons to change intensity level and/or speed and to alternate between two (user defined) intensity levels. NOTE: the user will need to confirm a change in speed by touching the flashing 'OK' button on the screen.
- Touch ■ to end your workout.
- Touch ⏸ to temporarily stop your workout and touch ▶ to resume. NOTE: After ⏸ is touched, speed, incline and resistance levels be reset.
- Touch 🌡 to enter cool down mode. Cool down lasts for a few minutes while reducing the workout intensity, allowing your body to recover from your workout.
- Touch 🔒 to prevent accidental screen touches from being implemented. Touch it again to unfreeze the screen and browse through features and make intentional changes to your entertainment or workout.
- Touch ✿ to turn the fan on. There are three fan speeds (low, medium, high).

HOMESCREEN:

MX15_T5x_T7xe_T7xi_OM_Rev2_2_DES.indd 38-39 2/2/15 9:58 AM

7XI APPS AND ENTERTAINMENT

- **FEATURED CONTENT** - Displays featured videos, music and workouts according to frequently-accessed content.
- **SIMPLE** - Workout stats are displayed in 3 customizeable windows.
- **VIRTUAL ACTIVE** - Your workout info is displayed and Virtual Active courses are shown. With Virtual Active, escape the confines of an ordinary workout as you or walk or run through exotic destinations.
- **IPOD** - Connect and control audio and video files on-screen.
- **FACEBOOK** - Browse your Facebook page while you work out.
- **TWITTER** - Access your Twitter feed while you work out.
- **TV** - Watch live TV.
- **WEATHER** - Get local weather info.
- **YOUTUBE** - Browse and watch YouTube videos while you work out.
- **FACILITY** - View Facility event schedule and other info.
- **CHANGE WORKOUT** - Select a different workout without stopping your current workout.

VIRTUAL ACTIVE SCREEN:

- **MEDIA PLAYER** - Connect and control audio and video files on-screen via USB port.
- **ON DEMAND TV** - Watch On Demand video content while you work out.
- **ON DEMAND MUSIC** - Watch On Demand music content while you work out.
- **MYFITNESSPAL** - Lose weight with MyFitnessPal, the fastest and easiest to use calorie counter.

NOTE: Availability of apps is subject to change. Additional apps may become available.

Made for iPod iPhone

"Made for iPod" and "Made for iPhone" mean that an electronic accessory has been designed to connect specifically to iPod or iPhone, respectively, and has been certified by the developer to meet Apple performance standards. Apple is not responsible for the operation of this device or its compliance with safety and regulatory standards. Please note that the use of this accessory with iPod or iPhone may affect wireless performance. iPod and iPhone are trademarks of Apple Inc., registered in the U.S. and other countries.

NIKE + IPOD INSTRUCTIONS (7XE CONSOLES ONLY)

REQUIREMENTS

Nike + iPod – compatible iPod or iPhone (See www.apple.com/nikeplus for more information).

Before syncing your Apple device, you must first create a free Nike + iPod account at www.nikerunning.com and have the Nike + iPod App turned on in the settings of your device.

GETTING STARTED

1) Before connecting your Apple device, you must first turn on Nike + iPod within the settings of the device.
2) Dock your Apple device and wait for authentication to complete. This may take up to 10 seconds. After authentication is complete, your iPod-specific console controls will be active (see next page).
3) If your iPod or iPhone is Nike Plus compatible, your workout will begin recording automatically to your Nike + iPod – compatible device.
4) When your workout is complete, your workout data will be recorded to your Nike Plus compatible device.
5) Log into your Nike Running account to review and track your workouts.

Made for iPod

"Made for iPod" means that an electronic accessory has been designed to connect specifically to iPod and has been certified by the developer to meet Apple performance standards. Apple is not responsible for the operation of this device or its compliance with safety and regulatory standards. iPod is a trademark of Apple Inc., registered in the U.S. and other countries.

MX15_T5x_T7xe_T7xi_OM_Rev2_2_DES.indd 40-41 2/2/15 9:58 AM

MANAGER MODE AND ENGINEERING MODE

T5X CONSOLE:

These sections allow users to manipulate default settings for the machines. It may be accessed by pressing the **Incline Down/Speed Down** keys simultaneously for 5 seconds. To change a setting, press "**Enter**" on the keypad under 'Manager Mode' or 'Engineering Mode' and use the incline or speed buttons and numeric keypad to enter a category and change the values. Pressing "**Enter**" again will save the change. Pressing "**Back**" will bring you to the previous menu. To exit Manager or Engineering Mode, hold "**Pause**" down for 5 seconds. Below is a list of the settings that can be changed.

MANAGER MODE SETTINGS:			ENGINEERING MODE SETTINGS:	
Maximum Time	Accumulated Time	Gender	Disable Error	Reset Default
Default Time	Software Version	Language	Elevation Minimum	Club ID
Default Level	Start Speed	Sound Mode	Elevation Maximum	Audio Source
Default Age	Maximum Speed	Navy Test Site	Auto Calibration	Volume Control
Default Weight	Speed Mode	Pause Time	Speed Units	AM System
Accumulated Distance	Out of Order		Pause Time	ErP Time
HRT Speed Based			Serial Number	

T7XE AND T7XI CONSOLES:

These sections allow users to manipulate default settings for the machines. Manager Mode may be accessed by pressing **ENTER, 1, 0, 0, 1, Enter** on the keypad. Engineering Mode may be accessed by pressing **ENTER, 2, 0, 0, 1, Enter** on the keypad. The screen shots on the next page show what you will see when you enter Manager Mode and Engineering Mode.

This console has a fully integrated touch screen display. Lightly touch the screen and use the intuitive interface to adjust the settings. Any and all changes made will be saved when the "home" button is touched in the upper left-hand corner of the screen. Touching the "home" button will exit manager or engineering mode and return you to the main screen. It is not necessary to touch this button after each setting is changed.

7XE - MANAGER AND ENGINEERING MODE

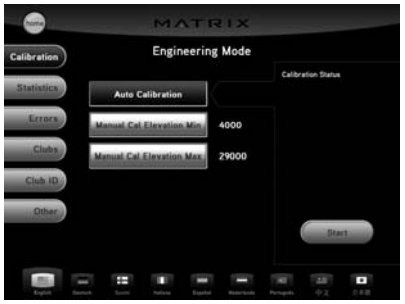

7XI - MANAGER AND ENGINEERING MODE

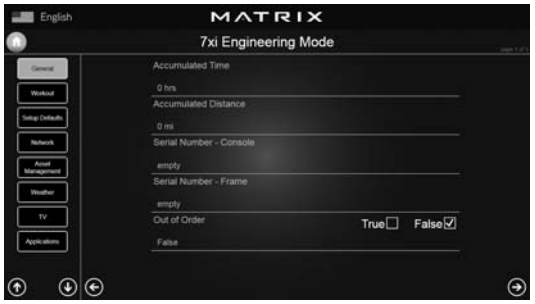

MX15_T5x_T7xe_T7xi_OM_Rev2_2_DES.indd 42-43
2/2/15 9:58 AM

TREADMILL WORKOUTS

MX15_T5x_T7xe_T7xi_OM_Rev2_2_DES.indd 44-45 2/2/15 9:58 AM

WORKOUT DESCRIPTIONS

QUICK START OPERATION

Press the **GO** button and the treadmill will enter into a manual mode of operation. All energy expenditure values will be calculated using the default wight measurement.

MANUAL WORKOUT OPERATION

Manual is a workout that allows you to manually adjust the speed and incline values at anytime. The manual workout also contains a setup screen which allows you to input your weight to help calculate a more accurate caloric burn rate.

To enter into this workout on a 5x, use the following guidelines. To enter into this workout on the 7xe and 7xi, follow the on-screen prompts.

1) Choose **MANUAL** by selecting the manual workout button and press **ENTER**.
2) Enter the desired workout length using the **ARROW KEYS** or the **NUMBER KEYPAD** and press **ENTER**.
3) Enter user weight (user weight is used to calculate the caloric expenditure value-providing an accurate weight helps to ensure an accurate caloric expenditure rating for each user) using the **ARROW KEYS** or the **NUMBER KEYPAD** and press **ENTER**.
4) Enter the desired initial incline using the **ARROW KEYS** or the **NUMBER KEYPAD** and press **ENTER**.
5) Enter the desired initial speed using the **ARROW KEYS** or **NUMBER KEYPAD** and press **ENTER**.
6) Press **GO** to begin the workout.

LEVEL BASED PROGRAMS

Your Matrix treadmill offers a variety of level-based workouts to challenge users of all fitness levels. The following information will briefly explain the workout and how to program the treadmill for each workout selection.

ROLLING HILLS WORKOUT OPERATION

Rolling hills is a level-based workout that automatically adjusts the incline to simulate walking or running up hills.

To enter into this workout on the 5x, use the following guidelines. To enter into this workout on the 7xe and 7xi, follow the on-screen prompts.

1) Choose **ROLLING HILLS** by selecting the rolling hills workout button and press **ENTER**.
2) Enter the desired intensity using the **ARROW KEYS** or the **NUMBER KEYPAD** and press **ENTER**.
3) Enter the desired workout length using the **ARROW KEYS** or the **NUMBER KEYPAD** and press **ENTER**.
4) Enter user weight (user weight is used to calculate the caloric expenditure value-providing an accurate weight helps to ensure an accurate caloric expenditure rating for each user) using the **ARROW KEYS** or the **NUMBER KEYPAD** and press **ENTER**.
5) Press **GO** to begin the workout.

NOTE: Programs may vary based on model and default settings.

FAT BURN WORKOUT OPERATION

Fat burn is a level-based workout that is designed to help users burn fat through various incline changes.

To enter into this workout on the 5x, use the following guidelines. To enter into this workout on the 7xe and 7xi, follow the on-screen prompts.

1) Choose **FAT BURN** by selecting the fat burn workout button and press **ENTER**.
2) Enter the desired intensity level using the **ARROW KEYS** or the **NUMBER KEYPAD** and press **ENTER**.
3) Enter the desired workout length using the **ARROW KEYS** or the **NUMBER KEYPAD** and press **ENTER**.
4) Enter user weight (user weight is used to calculate the caloric expenditure value-providing an accurate weight helps to ensure an accurate caloric expenditure rating for each user) using the **ARROW KEYS** or the **NUMBER KEYPAD** and press **ENTER**.
5) Press **GO** to begin the workout.

5K RUN WORKOUT OPERATION

5K run is a level-based workout with a fixed distance of 5 kilometers. Incline is adjusted automatically throughout the workout. You control the speed.

To enter into this workout on the 5x, use the following guidelines. To enter into this workout on the 7xe and 7xi, follow the on-screen prompts.

1) Choose **5K RUN** by selecting the 5K run workout button and press **ENTER**.
2) Enter the desired intensity using the **ARROW KEY**S or **NUMBER KEYPAD** and press **ENTER**.
3) Enter user weight (user weight is used to calculate the caloric expenditure value-providing an accurate weight helps to ensure an accurate caloric expenditure rating for each user) using the **ARROW KEYS** or **NUMBER KEYPAD** and press **ENTER**.
4) Press **GO** to begin the workout.

NOTE: Programs may vary based on model and default settings.

MX15_T5x_T7xe_T7xi_OM_Rev2_2_DES.indd 46-47 2/2/15 9:58 AM

WORKOUT DESCRIPTIONS

SPRINT 8

The SPRINT 8 program is an anaerobic interval program designed to build muscle, improve speed, and naturally increase the release of Human Growth Hormone (HGH) in your body. Producing HGH through exercise and a proper diet has been shown as an effective way to burn fat and build lean muscle mass according to Phil Campbell, author of Ready, Set, Go! Synergy Fitness. Please go to Mr. Campbell's website, **www.readysetgofitness.com**, for more details about this radical new approach to fitness.

1) WARM-UP (3:00) should gradually increase your heart rate and increase respiration and blood flow to working muscles. The warm-up is controlled by the user to meet your specific needs.

2) INTERVAL TRAINING (14:30) starts immediately after the warm-up with a 30-second sprint interval; changing both speed and incline. Seven recovery intervals of one minute and 30 seconds will alternate with the eight 30-second sprint intervals. The sprints will increase speed and elevation at the 3rd and 5th interval. The recovery speed is about 2–3 mph slower than your sprint and the recovery elevation is 0. You can alter your speed or incline during your workout.

3) COOL-DOWN (2:30) helps return your body's systems to resting levels. Less demand is placed on your heart during recovery if an appropriate cool-down is used following the exercise.

In order to keep track of each segment/interval, the segment time is counted down in the timer. It takes only 20 minutes to complete the SPRINT 8 workout.

To enter into this workout on the 7xi, follow the on-screen prompts.

HEART RATE CONTROL WORKOUT OPERATION

Your Matrix treadmill offers a heart rate control workout mode. The heart rate INCLINE workout mode allows the user to program their desired heart rate zone and maximum allowable incline and the treadmill will automatically adjust the incline based upon the user's heart rate. The heart rate SPEED workout mode allows the user to program their desired heart rate zone and maximum allowable speed and the treadmill will automatically adjust the speed based upon the user's heart rate. The heart rate zone is calculated using the following equation: (220-Age)*%=target heart rate zone. The maximum speed is limited to the settings controlled from within the 'Manager Mode'. The user must wear a telemetric heart rate monitor or continually hold onto the contact heart rate grips for this workout.

To enter into this workout on the 5x, use the following guidelines. To enter into this workout on the 7xe and 7xi, follow the on-screen prompts.

1) Choose **HEART RATE** by selecting the heart rate workout button and press **ENTER**.

2) To have this program control the **SPEED**, select your maximum speed using the **SPEED ARROW KEYS** and press **ENTER**. Or to have this program control the **INCLINE**, select your maximum incline using the **INCLINE ARROW KEYS** and press **ENTER**.

3) Enter age using the **ARROW KEYS** or the **NUMBER KEYPAD** and press **ENTER**.

4) Enter the desired percent of maximum heart rate using the **ARROW KEYS** and press **ENTER**.

5) Enter the desired workout length using the **ARROW KEYS** or the **NUMBER KEYPAD** and press **ENTER**.

6) Enter user weight (user weight is used to calculate the caloric expenditure value-providing an accurate weight helps to ensure an accurate caloric expenditure rating for each user) using the **ARROW KEYS** or the **NUMBER KEYPAD** and press **ENTER**.

7) Press **GO** to begin the workout.

Note: Programs may vary based on model and default settings.

MX15_T5x_T7xe_T7xi_OM_Rev2_2_DES.indd 48-49 2/2/15 9:58 AM

WORKOUT DESCRIPTIONS

FITNESS TEST

Your Matrix treadmill offers a variety of fitness tests-the Gerkin firefighter protocol, the WFI firefighter protocol, the Army, Navy, Marines (USMC), and Air Force (USAF) as well as the Physical Efficiency Battery (PEB).

The Gerkin protocol was developed by Dr. Richard Gerkin of the Phoenix (Arizona) Fire Department. It is a sub-maximal graded treadmill evaluation used by many Fire Departments across the United States to assess the physical condition of the firefighters. The test requires constant monitoring of the user's heart rate so the use of a telemetric chest strap is highly ....encouraged. This test has 15 stages, with each succeeding stage increasing the treadmill speed or incline. When the runner's maximum heart trate is reached, based on age and gender, the test is completed. The score is calculated using the length of time needed to reach and maintain the maximum heart rate for 15 seconds. The workout operates as follows:

WARM-UP: The warm-up is 3 minutes long and runs at 3.0 mph (4.8 kph) and 0% incline.

STAGE 1: At the 3 minute mark, the treadmill will gradually increase speed to 4.5 mph (7.2 kph). The actual test begins at 4.5 mph (7.2 kph).

STAGE 2: After one minute, the treadmill incline will increase to 2%.

STAGE 3: After one minute, the treadmill speed increases to 5.0 mph (8.0 kph).

STAGES 4 THROUGH 15: After every odd minute, the treadmill incline will increase by 2%. After every even minute, the treadmill speed will increase by 0.5 mph (0.8 kph). Once the user's heart rate exceeds the target heart rate (85% of maximum as determined by the equation (220-Age)*%=target heart rate zone), the individual continues the evaluation for an additional 15 seconds. During the 15 second period, the evaluation remains at the stage where the target heart rate is exceeded, without any change to speed or incline. If the heart rate does not return to or below the target heart rate, the evaluation ends and the final evaluation stage is recorded. If the heart rate returns to or below the target heart rate, the program continues at the point where it would have been had the program not stabilized for 15 seconds.

TEST COMPLETION: The test is completed when user heart rate exceeds the target for more than 15 seconds or the user completes all 15 stages, whichever occurs first. The treadmill will enter a cool down cycle for 3 minutes at 3.0 mph (4.8 kph), 0% incline.

Note: Programs may vary based on model and default settings.

FITNESS TEST

To enter into this workout on the 5x, use the following guidelines. To enter into the Gerkin testing workout on the 7xe and 7xi, follow the on-screen prompts.

1) Choose the Gerkin test by pressing the **FITNESS TEST** workout button until Gerkin is shown in the message window and press **ENTER**.
2) Enter age using the **ARROW KEYS** or the **NUMBER KEYPAD** and press **ENTER**
3) The message window will display your target heart rate based upon your age and the target heart rate zone of 85%.
4) Select gender using the **ARROW KEYS** and press **ENTER**.
5) Enter user weight (user weight is used to calculate the caloric expenditure value-providing an accurate weight helps to ensure an accurate caloric expenditure rating for each user) using the **ARROW KEYS** or the **NUMBER KEYPAD** and press **ENTER**.
6) The message window will notify the user that the start speed is 3.0 mph (4.8 kph) and 0% incline during the warm-up.
7) Press **GO** to begin the workout.

Note: Programs may vary based on model and default settings.

SUBMAXIMAL TREADMILL EVALUATION CONVERSION TABLES:

Males:	VO2 max (ml/kg/min)			
	20-29	30-39	40-49	50-59
SUPERIOR	>58.8	>58.9	>55.4	>52.5
	54.0	52.5	50.4	47.1
EXCELLENT	51.4	50.3	48.2	45.3
	48.2	46.8	44.1	41.0
GOOD	46.8	44.6	41.8	38.5
	44.2	42.4	39.9	36.7
FAIR	42.5	41.0	38.1	35.2
	41.0	38.9	36.7	33.8
POOR	39.5	37.4	35.1	32.3
	37.1	35.4	33.0	30.2
VERY POOR	34.5	32.5	30.9	28.0
	31.6	30.9	28.3	25.1

Females:	VO2 max (ml/kg/min)			
	20-29	30-39	40-49	50-59
SUPERIOR	>53.0	>48.7	>46.8	>42.0
	46.8	43.9	41.0	36.8
EXCELLENT	44.2	41.0	39.5	35.2
	41.0	38.6	36.3	32.3
GOOD	38.1	36.7	33.8	30.9
	36.7	34.6	32.3	29.4
FAIR	35.2	33.8	30.9	28.2
	33.8	32.3	29.5	26.9
POOR	32.3	30.5	28.3	25.5
	30.6	28.7	26.5	24.3
VERY POOR	28.3	26.5	25.1	22.3
	25.9	25.1	23.5	21.1

MX15_T5x_T7xe_T7xi_OM_Rev2_2_DES.indd 50-51 2/2/15 9:58 AM

WORKOUT DESCRIPTIONS

The WFI (Wellness Fitness Initiative) protocol is a modified Gerkin test used by firefighters to evaluate aerobic fitness capacity as part of pre-employment testing and annual fitness testing. The goal is to meet or exceed 12 minutes and 30 seconds. This assessment is a series of one-minute intervals, alternating between speed and percent grade.

To enter into this workout on a 5x, use the following guidelines.

1) Choose the WFI test by pressing the **FITNESS TEST** workout button until WFI is shown in the message window and press **ENTER**.
2) Enter age using the **ARROW KEYS** or the **NUMBER KEYPAD** and press **ENTER**
3) The message window will display your target heart rate based upon your age and the target heart rate zone of 85%.
4) Select gender using the **ARROW KEYS** and press **ENTER**.
5) Enter user height (user height is used to calculate the caloric expenditure value-providing an accurate height helps to ensure an accurate caloric expenditure rating for each user) using the **ARROW KEYS** or the **NUMBER KEYPAD** and press **ENTER**.
6) Enter user weight (user weight is used to calculate the caloric expenditure value-providing an accurate weight helps to ensure an accurate caloric expenditure rating for each user) using the **ARROW KEYS** or the **NUMBER KEYPAD** and press **ENTER**.
7) A Body Mass Index number (BMI) is displayed based on the user's gender, height and weight.
8) The message window will notify the user that the start speed is 3.0 mph (4.8 kph) and 0% incline during the warm-up.
9) Press **GO** to begin the workout.

Note: Programs may vary based on model and default settings.

WORKOUT DESCRIPTIONS

FITNESS TEST

The Military Test programs and the Physical Efficiency Battery (PEB) provide workouts of a preset distance. These distances are established by the various branches of the Military with the objective of each test to complete the distance as quickly as possible. At the completion of the test, a time-based score as defined by the respective Military branch will be shown on the console.

To enter into these fitness tests on a 5x, use the following guidelines. To enter into these fitness tests on a 7xe or 7xi, follow the on-screen prompts.

1) Choose your desired fitness test by pressing the **FITNESS TEST** workout button until your desired test is shown in the message window and press **ENTER**.
2) Enter age using the **ARROW KEYS** or the **NUMBER KEYPAD** and press **ENTER.**
3) Select gender using the **ARROW KEYS** and press **ENTER**.
4) Enter user weight (user weight is used to calculate the caloric expenditure value-providing an accurate weight helps to ensure an accurate caloric expenditure rating for each user) using the **ARROW KEYS** or the **NUMBER KEYPAD** and press **ENTER**.
5) Enter the desired start speed using the **ARROW KEYS** or the **NUMBER KEYPAD** and press **ENTER**.
6) Press **GO** to begin the workout.

PEB - This fitness test is based on the running portion of the United States Federal Law Enforcement physical fitness test. The score (0-95) is determined by the time needed to complete a 1.5 mile run, the runner's are and gender. The user adjusts their speed and incline as they want. The faster you can run this distance, the better your score will be.

Marines - This fitness test is based on the running portion of the United States Marine Corps physical fitness test. The score (0-100) is determined by the time needed to complete a 3 mile run, the runner's age and gender. The user adjusts their speed and incline as they want. The faster you can run this distance, the better your score will be.

Air Force - This fitness test is based on the running portion of the United States Air Force physical fitness test. The score (0-50) is determined by the time needed to complete a 1.5 mile run, the runner's age and gender. The user adjusts their speed and incline as they want. The faster you can run this distance, the better your score will be.

Navy - This fitness test is based on the running portion of the United States Navy physical fitness test. The score (45-100) is determined by the time needed to complete a 1.5 mile run, the runner's age and gender. The user adjusts their speed and incline as they want. The faster you can run this distance, the better your score will be.

Army - This fitness test is based on the running portion of the United States Army physical fitness test. The score (0-100) is determined by the time needed to complete a 2 mile run, the runner's age and gender. The user adjusts their speed and incline as they want. the faster you can run this distance, the better your score will be.

Note: Programs may vary based on model and default settings.

MX15_T5x_T7xe_T7xi_OM_Rev2_2_DES.indd 52-53 2/2/15 9:58 AM

PRODUCT SPECIFICATIONS

	T7xi TREADMILL	T7xe TREADMILL	T5x TREADMILL
TECH SPECS			
OVERALL DIMENSIONS (L X W X H)	84.6" X 36.5" X 63.5" / 215 CM X 93 CM X 161 CM	84.6" X 36.5" X 63.5" / 215 CM X 93 CM X 161 CM	84.6" X 36.5" X 63.5" / 215 CM X 93 CM X 161 CM
MAXIMUM USER WEIGHT	400 LBS/182 KG	400 LBS/182 KG	400 LBS/182 KG
WEIGHT	399 LBS/181 KG	399 LBS/181 KG	394 LBS/179 KG
SHIPPING WEIGHT	440 LBS/200 KG	440 LBS/200 KG	433 LBS/197 KG
ELECTRICAL RECEPTACLE & PLUG	NEMA 5-20R/P 110 V OR NEMA 6-20R/P 220 V	NEMA 5-20R/P 110 V OR NEMA 6-20R/P 220 V	NEMA 5-20R/P 110 V OR NEMA 6-20R/P 220 V
ELECTRICAL REQUIREMENTS	20 A DEDICATED CIRCUIT REQUIRED-NON-LOOPED-GROUNDED	20 A DEDICATED CIRCUIT REQUIRED-NON-LOOPED-GROUNDED	20 A DEDICATED CIRCUIT REQUIRED-NON-LOOPED-GROUNDED

*15MPH / 24.1 KPH RATING GOOD UP TO 350 LB USER

NORTH AMERICAN SPECIFICATIONS SHOWN. SPECIFICATIONS SUBJECT TO CHANGE. FOR LATEST SPECIFICATIONS PLEASE VISIT WWW.MATRIXFITNESS.COM

• This device complies with Part 15 of the FCC Rules. Operation is subject to the following two conditions: (1) this device may not cause harmful interference, and (2) this device must accept any interference received, including interference that may cause undesired operation.
This device contains transmitter module FCC ID: PPD-AR5BHB116
• Any changes or modifications not expressly approved by the party responsible for compliance could void the user's authority to operate this equipment.

7XI - WHAT'S NEW

SPRINT 8®

The 20-minute Sprint 8® workout program is a science-based sprint cardio training plan that stimulates the natural release of human growth hormone, which burns fat and builds lean muscle in just 20 minutes, 3 times a week. In two hospital-based studies, participants who performed the Sprint 8 workout for 8 weeks lost, on average, 27% of their body fat.

To keep users on track, the Sprint 8® workout program provides a Sweat Score after every sprint. The Sweat Score is a measure of effort, and users should aim to match or exceed their previous Sweat Score with each subsequent sprint.

Now available on the Treadmill T7xi, Ascent Trainer A7xi, Suspension Elliptical E7xi, Hybrid Bike H7xi, Upright Bike U7xi, and Recumbent Bike R7xi

LANDMARKS

The Landmarks workout program lets you climb the height of the Eiffel Tower, Statue of Liberty, Christ the Redeemer Statue, Empire State Building, One World Trade Center, Tower of Pisa, Great Pyramid of Giza, St. Basil's Cathedral, Burj Khalifa, Taj Mahal and Taipei 101.

Now available on the ClimbMill C7xi and Stepper S7xi

WIRELESS LOGIN

RFID-equipped 7xi consoles allow users to login using their compatible RFID tag.*

* This optional add-on feature is sold separately. Supported standards with carrier frequency of 13.56 MHz include; ISO 14443 A, ISO 15693, ISO 14443 B, Sony Felica, Inside Contactless (HID iClass), and LEGIC RF.

©2015 Johnson Health Tech. 150225

1-866-693-4863
www.matrixfitness.com

Matrix Fitness
1600 Landmark Drive,
Cottage Grove, WI 53527

MX15_T5x_T7xe_T7xi_OM_Rev2_2_DES.indd 56 2/2/15 9:58 AM