ARISTA

Quick Start Guide

C-430E Access Point

Arista.com

Arista Networks

DOC-07746-01

Headquarters	Support	Sales
5453 Great America Parkway Santa Clara, CA 95054 USA +1-408-547-5500	+1-408-547-5502 +1-866-476-0000	+1-408-547-5501 +1-866-497-0000
www.arista.com/en/	support@arista.com	sales@arista.com

© Copyright 2025 Arista Networks, Inc. All rights reserved. The information contained herein is subject to change without notice. The trademarks, logos, and service marks ("Marks") displayed in this documentation are the property of Arista Networks in the United States and other countries. Use of the Marks is subject to the Arista Networks Terms of Use Policy, available at www.arista.com/en/terms-of-use. Use of marks belonging to other parties is for informational purposes only.

Contents

Chapter 1: About This Guide..... 1

Chapter 2: Package Content.....2

Chapter 3: Access Point Overview..... 4

3.1 Front Panel..... 4
3.2 Rear Panel.....5
3.3 Side Panel..... 6

Chapter 4: Install the Access Point..... 9

4.1 Ceiling Mount the Access Point..... 9
4.2 Wall Mount the Access Point..... 10
4.3 Connecting External Antennas to Access Point.....10

Chapter 5: Power On the Access Point.....12

5.1 Using the Access Point with Power Adapter.....12

Chapter 6: Connect the Access Point to the Network..... 13

6.1 Connect the Access Point using PoE..... 13

Chapter 7: Access Point Troubleshooting..... 14

Chapter 8: Appendix A: AP-Server Mutual Authentication..... 15

Chapter 9: Appendix B: Product Compliance..... 16

Chapter 1

About This Guide

This installation guide explains how to deploy the C-430E access point (AP).

> **Important:** Please read the EULA before installing the access point (AP). You can download and read the EULA from: https://www.arista.com/en/support/product-documentation
>
> Installing the AP constitutes your acceptance of the terms and conditions of the EULA mentioned above.

Intended Audience

This guide can be referred by anyone who wants to install and configure the access point.

Document Overview

This guide contains the following chapters:

- Package Content
- Access Point Overview
- Install the Access Point
- Access Point Troubleshooting

> **Note:** All instances of the term 'server' in this document refer to the Wireless Manager, unless the server name or type is explicitly stated.

Product and Documentation Updates

To receive important news on product updates, please visit our website at https://www.arista.com/en/support/product-documentation. We continuously enhance our product documentation based on customer feedback

This equipment conforms to the requirements of the NCC.

- 經型式認證合格之低功率射頻電機，非經許可，公司、商號或使用者均不得擅自變更頻率、加大功率或變更原設計之特性及功能。
- 低功率射頻電機之使用不得影響飛航安全及干擾合法通信；經發現有干擾現象時，應立即停用，並改善至無干擾時方得繼續使用。前項合法通信，指依電信法規定作業之無線電通信。低功率射頻電機須忍受合法通信或工業、科學及醫療用電波輻射性電機設備之干擾。
- 無線資訊傳輸設備避免影響附近雷達系統之操作。

Chapter 2

Package Content

The access point (AP) package must contain the components shown in the following figure.

Figure 2-1: Package Components

Table 1: Labels: Package Components

Label	Description
1	C-430E Access Point
2	15/16" (24 mm) Mounting Bracket (MNT-AP-24MM)

Important: The MAC address of the AP is printed on a label at the bottom of the product and the packaging box. Note down the MAC address before mounting the AP on the ceiling or at a location that is difficult to access.

If the package is not complete, please contact the Arista Networks Technical Support Team at support-campus@arista.com or return the package to the vendor or dealer where you purchased the product.

Chapter 3

Access Point Overview

C-430E is a Wi-Fi 7 multi-radio 802.11be access point. Refer the datasheet for more information.

> **Note:** This equipment is suitable for use in environment air spaces (plenums).

FCC Advisory: C-430E is prohibited for control of or communications with unmanned aircraft systems, including drones, in the 6 GHz band.

This chapter provides an overview of the access point (AP) and describes:

- Front Panel
- Rear Panel
- Side Panel

3.1 Front Panel

The front panel of the AP has 6 LEDs that indicate the status of various AP functions.

Figure 3-1: Front Panel LEDs

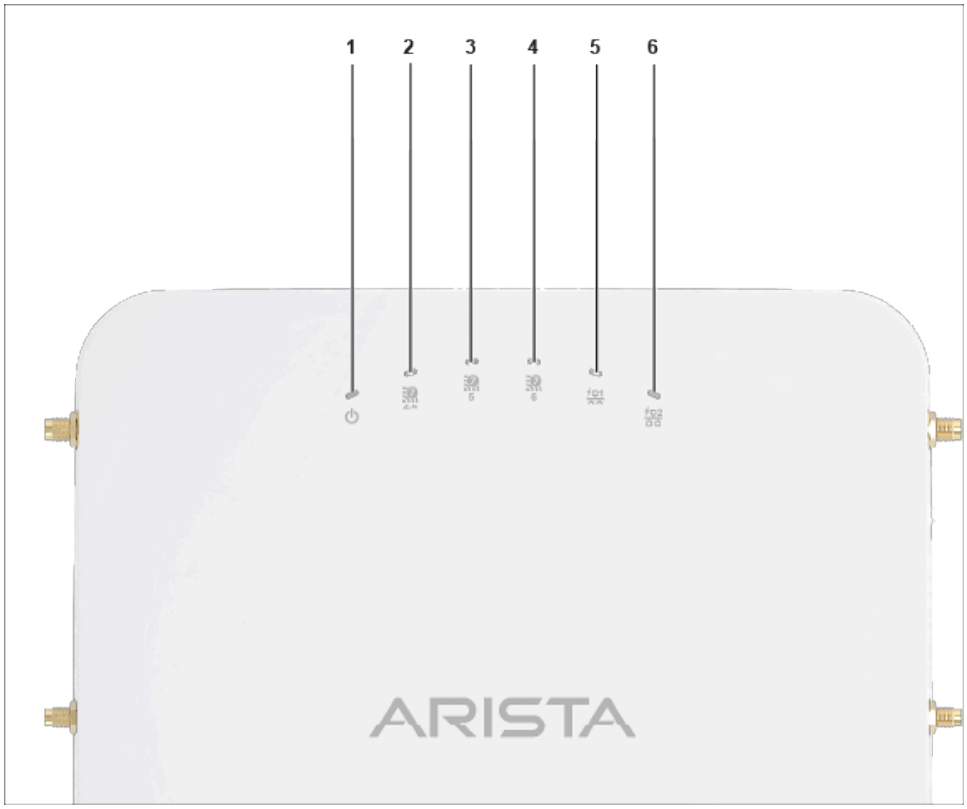

Table 2: Labels: Front Panel LEDs

Label	Description
1	Power
2	2.4 GHz Radio
3	5 GHz Radio
4	6 GHz Radio
5	LAN1
6	LAN2

Power LED: The following table describes the Power LED states.

Table 3: Power LED States Description

	Green	Orange
Solid	Running at full capability	Running at reduced capability
Blinking	Received IP address, but not connected to the server	Did not receive an IP address

Reduced capability indicates that the AP is getting lower than the required maximum power from the PoE+ switch. It means the AP is getting 802.3af instead of 802.3at.

LAN1 LED: ON when the corresponding interface is up.

LAN2 LED: ON when the corresponding interface is up, and either wired guest or link aggregation is configured.

Radio LEDs: ON when the corresponding radio is operational.

3.2 Rear Panel

The rear panel of the AP has its DC power port and 802.3at compliant PoE+ LAN ports to power the device and connect it to a wired LAN.

Figure 3-2: Rear Panel

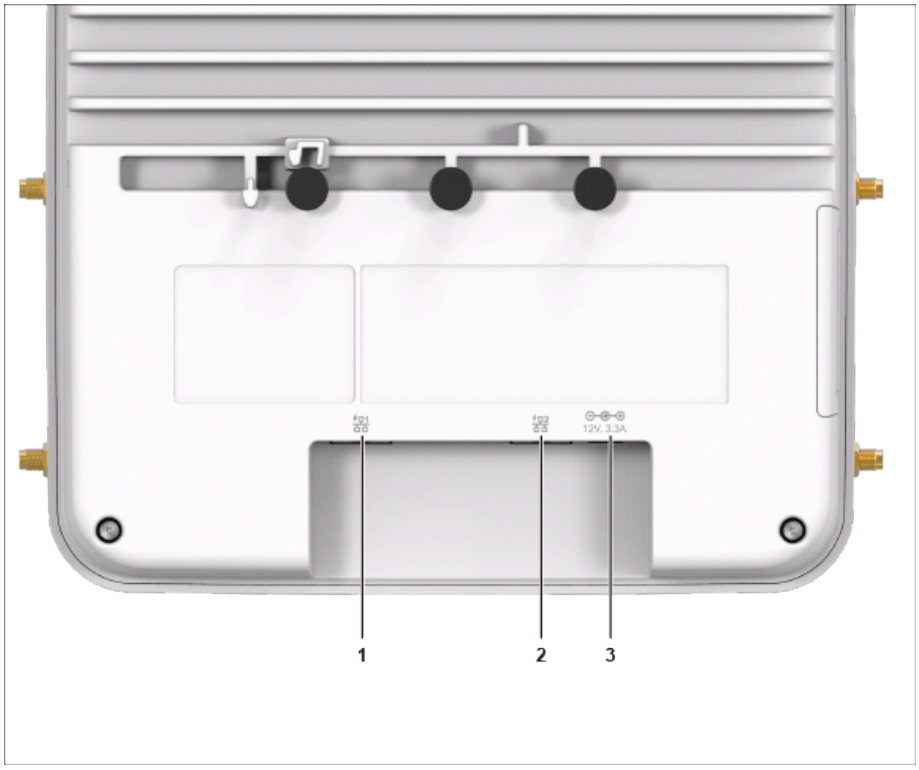

Table 4: Labels: Rear Panel

Label	Description
1	LAN1, POE+
2	LAN2, POE+
3	DC Power

Table 5: Port Details

Port	Description	Connector Type	Speed/Protocol
Power	12V DC/3.3A	5.5 mm overall diameter / 2.1 mm center pinhole	N/A
LAN 1	5 Gigabit Ethernet with 802.3at compliant PoE	RJ-45	100 /1000 Mbps / 2.5/ 5 Gbps Ethernet
LAN 2	5 Gigabit Ethernet with 802.3at compliant PoE	RJ-45	100 /1000 Mbps / 2.5/ 5 Gbps Ethernet

3.3 Side Panel

The side panel of the AP has a reset pinhole, USB port, and console port.

Figure 3-3: Side Panel

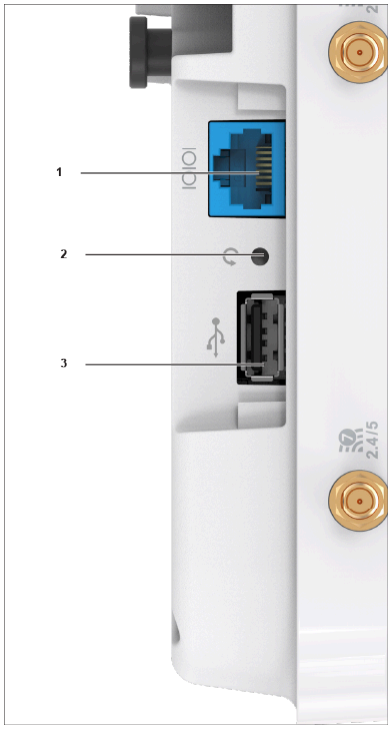

Table 6: Labels: Side Panel

Label	Description
1	Console
2	Reset
3	USB

Port	Description	Connector Type	Speed/Protocol
Console	Establish 'config shell' terminal session via serial connection	RJ-45	• RS 232 Serial (115200 bits per second) • Data bits:8; Stop bits: 1 • Parity: None • Flow Control: None
USB	USB 2.0 port with power output rating of 5V/0.3A (1.5W).	USB	NA
Reset	Reset to factory default settings port. Hold down and power cycle the device to reset.	Pinhole push button	N/A

When you reset the AP, the following settings are reset:

- Config shell password is reset to **config**.
- Server discovery value is erased and changed to the default, **redirector.online.spectraguard.net** (primary) and **wifi-security-server** (secondary).
- All the VLAN configurations are lost.
- If a static IP is configured on the AP, the IP address is erased and DHCP mode is set. The factory default IP address of the AP is 169.254.11.74.

Chapter 4

Install the Access Point

This chapter contains the stepwise procedure to install the access point (AP).

Zero-Configuration of the Access Point

Zero-configuration is supported under the following conditions:

- The device is in AP mode with background scanning on and no SSID configured.
- A DNS entry **wifi-security-server** is set up on all the DNS servers. This entry should point to the IP address of the server. By default, the AP looks for the DNS entry **wifi-security-server**.
- The AP is on a subnet that is DHCP enabled.

Refer to these articles to understand how APs communicate with the server, and the ports that you need to open to enable the communication:

- Wi-Fi Access Points-Server Comunication
- TCP Ports and UDP Ports Used by Access Points

> **Important:** If the AP is on a network segment that is separated from the server by a firewall, you must first open port 3851 for bidirectional User Datagram Protocol (UDP) and Transport Control Protocol (TCP) traffic on that firewall. This port number is assigned to Arista Networks. Zero-configuration cannot work if multiple APs are set up to connect to multiple servers. In this case, the APs must be configured manually. For details on how to configure an AP manually, see the Access Point CLI Guide.

Take a configured AP; that is, ensure that a static IP is assigned to the AP or the settings have been changed for DHCP. Note the MAC address and the IP address of the AP in a safe place before it is installed in a hard-to-reach location. The MAC address of the AP is printed on a label at the bottom of the product.

The steps to install the AP with no configuration (zero-configuration) are as follows:

1. Ceiling Mount the Access Point or Wall Mount the Access Point
2. Connect the Access Point to the Network
3. Power On the Access Point

4.1 Ceiling Mount the Access Point

Mounting the access point (AP) on the ceiling consists of the following steps:

1. **Affix the bracket to the T -grid:** Use the mounting bracket to install the AP on the ceiling. Fix the bracket to the T-grid and rotate the bracket so that it snaps on the T-grid. The bracket is now parallel to an arm of the T-grid. Ensure that the bracket is properly snapped to the T-grid, as shown below.

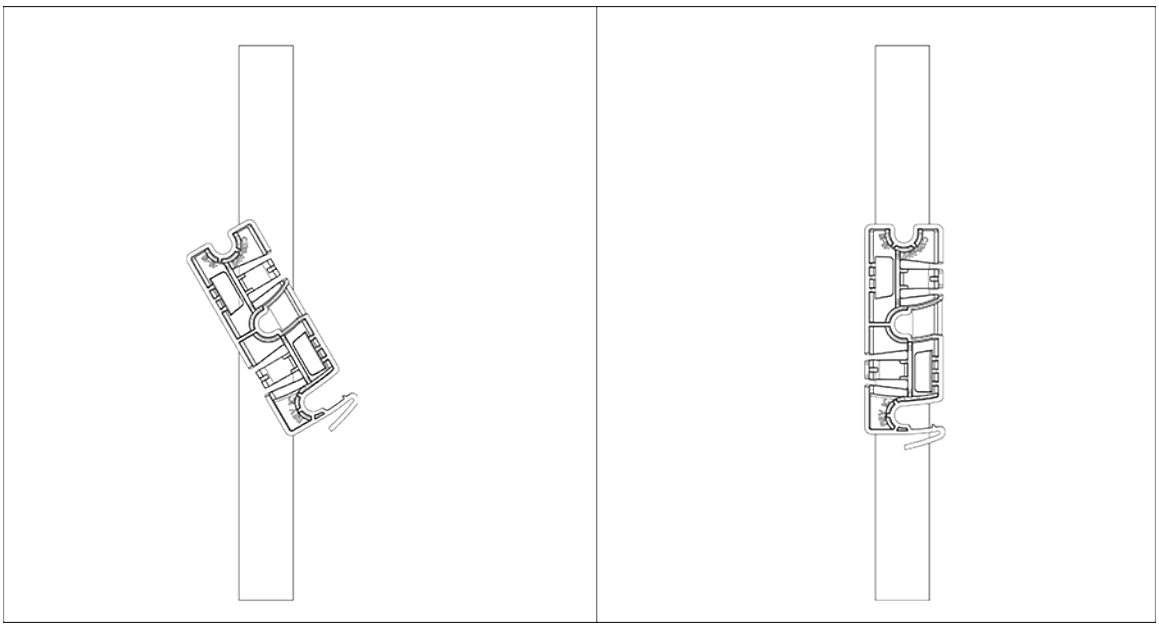

2. **Mounting the AP on the bracket:** Place the mounting post at the rear-side of the AP on to the lower notch of the bracket. Rotate the AP such that the center mounting post fits in to the center notch on the bracket. Ensure that all the mounting posts on the rear-side of the AP are snapped in to the respective notches on the bracket. The mounting posts now properly fit in the respective notches of the bracket and the AP is mounted properly.

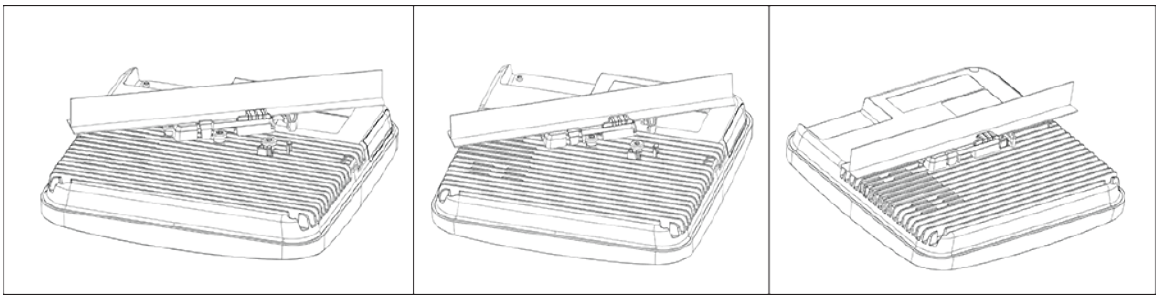

Mounting Instructions using the Silhouette/Interlude Bracket Mount: The Silhouette/Interlude mounting bracket is not a part of the standard package and must be procured separately. The mounting instructions for the Silhouette/Interlude Bracket Mount are similar to the Standard Package Content's mounting instructions.

> **Note:** As a best practice, label the APs using MAC addresses or user your own convention. For example, use serial numbers so that you can easily identify the APs.

4.2 Wall Mount the Access Point

> **Note:** The wall mounting accessory SKU (MNT-AP-FLAT-14CM) can be ordered and purchased separately.

For instructions on wall mounting the access point, refer to Wall Mount the Access Point article.

4.3 Connecting External Antennas to Access Point

Connect the external antennas to antenna ports available on the left and right of the AP. Use RP-SMA type connectors for the antennas. Verify the port markings on the AP before attaching the antenna. Some ports support 2.4/5 GHz, some ports support 6 GHz, and some ports support 2.4/5/6 GHz.

Figure 4-1: Right panel antenna ports

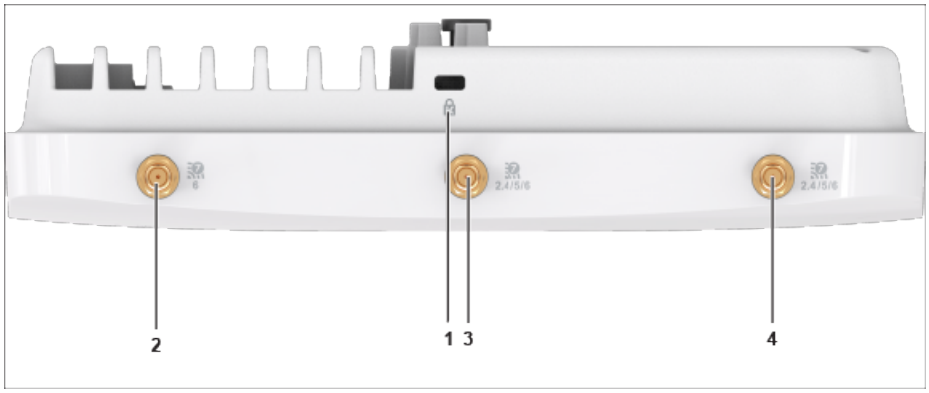

Table 7: Labels: Right Panel Antenna Ports

Label	Description
1	Kensington lock
2	Single band antenna for the 6GHz band.
3	Multi-band antenna for 2.4, 5, and 6 GHz bands.
4	Multi-band antenna for 2.4, 5, and 6 GHz bands.

Figure 4-2: Left panel antenna ports

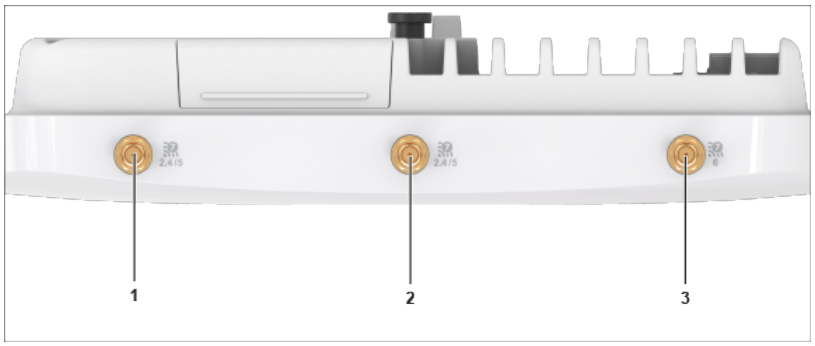

Table 8: Labels: Left PanelAntenna Ports

Label	Description
1	Multi-band antenna for 2.4GHz and 5GHz bands.
2	Multi-band antenna for 2.4GHz and 5GHz bands.
3	Single-band antenna for the 6GHz band.

Chapter 5

Power On the Access Point

You can power the access point (AP) on by plugging one end of the Ethernet cable into the PoE+ (802.3at) switch or injector and the other end into the LAN1 PoE+ port on the AP. Ensure the PoE+ source you are using is turned ON, or use a compatible power adapter (Arista SKU: PWR-AP-W4) to power the AP. The power adapter (if used) must be connected to a socket outlet with an earthing connection.

Note: If you are not using PoE+, ensure that you use only an AC power adapter supported by the AP.

5.1 Using the Access Point with Power Adapter

Use a compatible power adapter (Arista SKU: PWR-AP-W4) to power the AP.

Warning: C-430E is intended to be supplied by approved external power source (UL listed/ IEC 60950-1/IEC 62368-1) whose output complies with ES1/SELV, PS2/LPS, output rating 12V DC, 3.3A minimum (for DC port) or 54V DC, 0.6A minimum (for PoE port), at an ambient temperature of 45°C, and at maximum altitude of 5000m. For any assistance, please contact your Arista representative.

The maximum altitude of operation for the power adapter is 5000m.

To power up the device with power adapter, perform the following steps:

1. Plug the power cable into the DC power receptacle at the rear of the AP.
2. Plug the other end of the power cable into an 110V~240V, 50/60 Hz AC power source.
3. Wait until the AP is ready. Refer to the LED status table.

Chapter 6

Connect the Access Point to the Network

To connect the AP to the network, perform the following steps:

1. Ensure that a DHCP server is available on the network to enable network configuration of the AP.
2. Add the DNS entry **wifi-security-server** on all DNS servers. This entry must point to the IP address of the server.
3. Ensure that DHCP is running on the subnet to which the AP is connected.
4. Check the LEDs on the AP to ensure that it is connected to the server.
5. Log on to the server using ssh and run the `get sensor list` command.

   You will see a list of all Arista devices that are recognized by the server. Single Sign-On users can go to the **Monitor** tab in CloudVision Cognitive Unified Edge and check whether the access point is visible under the **Monitor** tab.

Note: If zero configuration fails, the AP must be configured manually.

Important: If DHCP is not enabled on a subnet, the AP cannot connect to that subnet with zero-configuration. If the DNS entry is not present on the DNS servers, or if you do not have the DHCP server running on the subnet, you must manually configure the AP. For details on configuring an AP manually, see the Access Point CLI Guide.

6.1 Connect the Access Point using PoE

If you are using a PoE injector, make sure the data connection is plugged into a suitable switch port with proper network connectivity.

For PoE port details, see the Rear Panel section.

Chapter 7

Access Point Troubleshooting

The table below lists some of the troubleshooting guidelines for the access point (AP).

Problem	Solution
The AP did not receive a valid IP address via the DHCP.	Ensure that the DHCP server is on and available on the VLAN/subnet to which the AP is connected. If the AP still fails to get a valid IP address, you can reboot it to see if the problem is resolved.
Unable to connect to the server.	• Ensure that the server is running and is reachable from the network to which the AP is connected. If a firewall or a router has Access Control Lists (ACLs) enabled between the AP and the server, ensure that traffic on UDP port 3851 is allowed. • Use the IP-based server discovery method and ensure that you have correctly entered the DNS name, **wifi-security-server** , on the DNS server. • Ensure that the DNS server IP addresses are either correctly configured, or are provided by the DHCP server. • The AP might fail to authenticate with the server. In this case, an 'Authentication failed ' event is raised on the server. Refer to the event for recommended action.
The AP has encountered a problem.	• If you are using Arista Cloud Services, then open the TCP port 443 (SSL). If you have an on-premises installation, then open UDP port 3851 and port 80. • If using a Proxy, Web Accelerator, or URL Content Filter between the AP and the Internet, ensure that the settings allow communication between the AP and Arista Cloud Services. For more information, see https://arista.my.site.com/AristaCommunity/s/article/Wi-Fi-Access-Point-Server-Communication-Workflow • If your configuration requires you to specify an exact IP address or IP range for Arista Cloud Services, please contact support-campus@arista.com.

Chapter 8

Appendix A: AP-Server Mutual Authentication

The AP-server communication begins with a mutual authentication step in which the AP and server authenticate each other using a shared secret. The AP-server communication takes place only if this authentication succeeds.

For more information on the AP-server communication process, see the Wi-Fi Access Point Server Communication Workflow article.

Appendix B: Product Compliance

Singapore IMDA Registration Mark

Complies with
IMDA Standards
DB107129