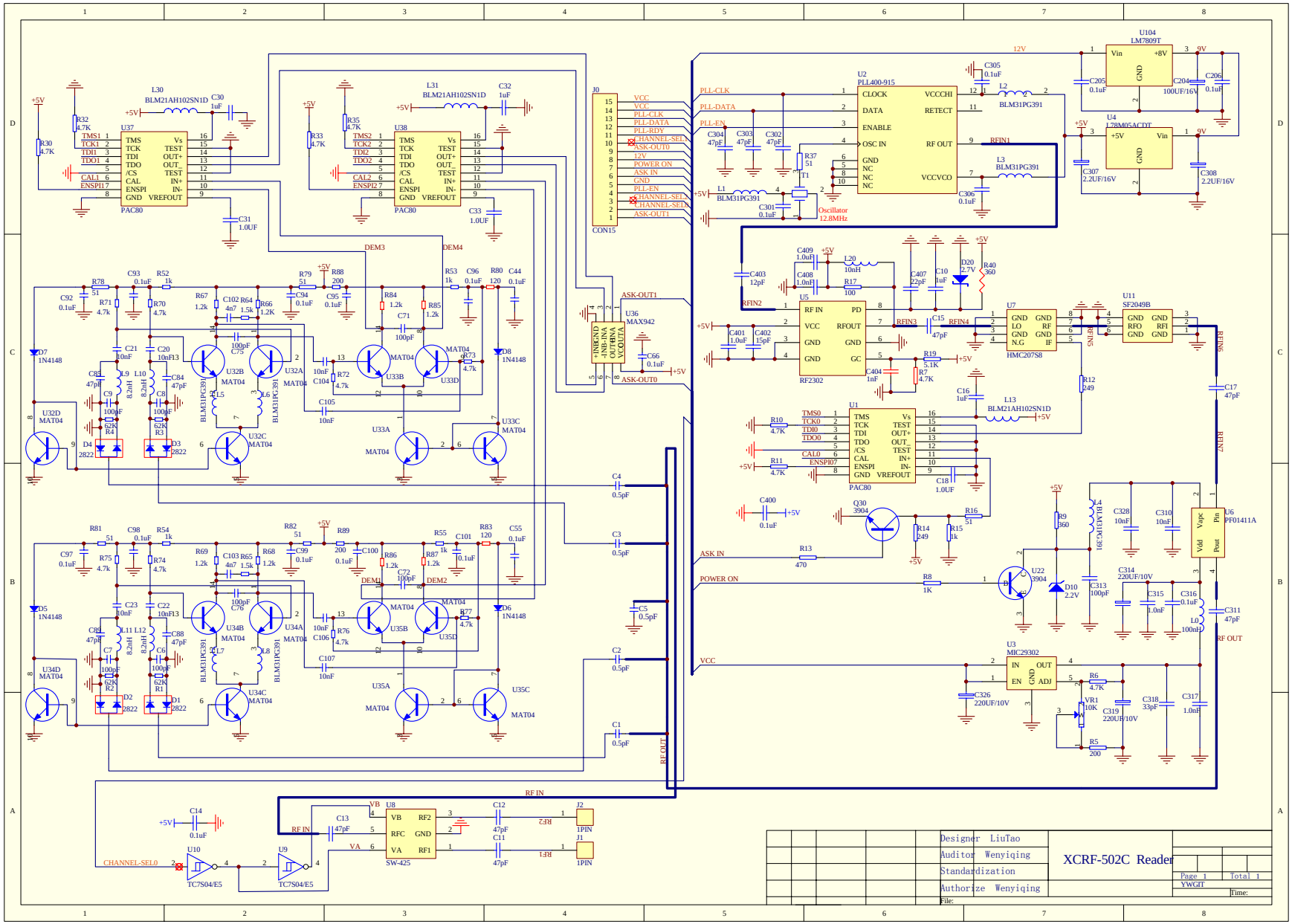
XCRF-502C Reader
Designer LiuTao
Auditor Wenyiqing
Standardization
Authorize Wenyiqing
Page 1
Total 1
YWGIT
Time:
File:
U2 PLL400-915
U104 LM7809T
U4 L78M05ACDT
U5 RF2302
U7 HMC207S8
U11 SF2049B
U1 PAC80
U37 PAC80
U38 PAC80
U3 MIC29302
U6 PF01411A
U8 SW-425
U9 TC7S04/E5
U10 TC7S04/E5
U36 MAX942
J0 CON15
Oscillator 12.8MHz
PLL-CLK
PLL-DATA
PLL-EN
ASK IN
POWER ON
VCC
RF OUT
RF IN
ASK-OUT1
ASK-OUT0
CHANNEL-SEL0

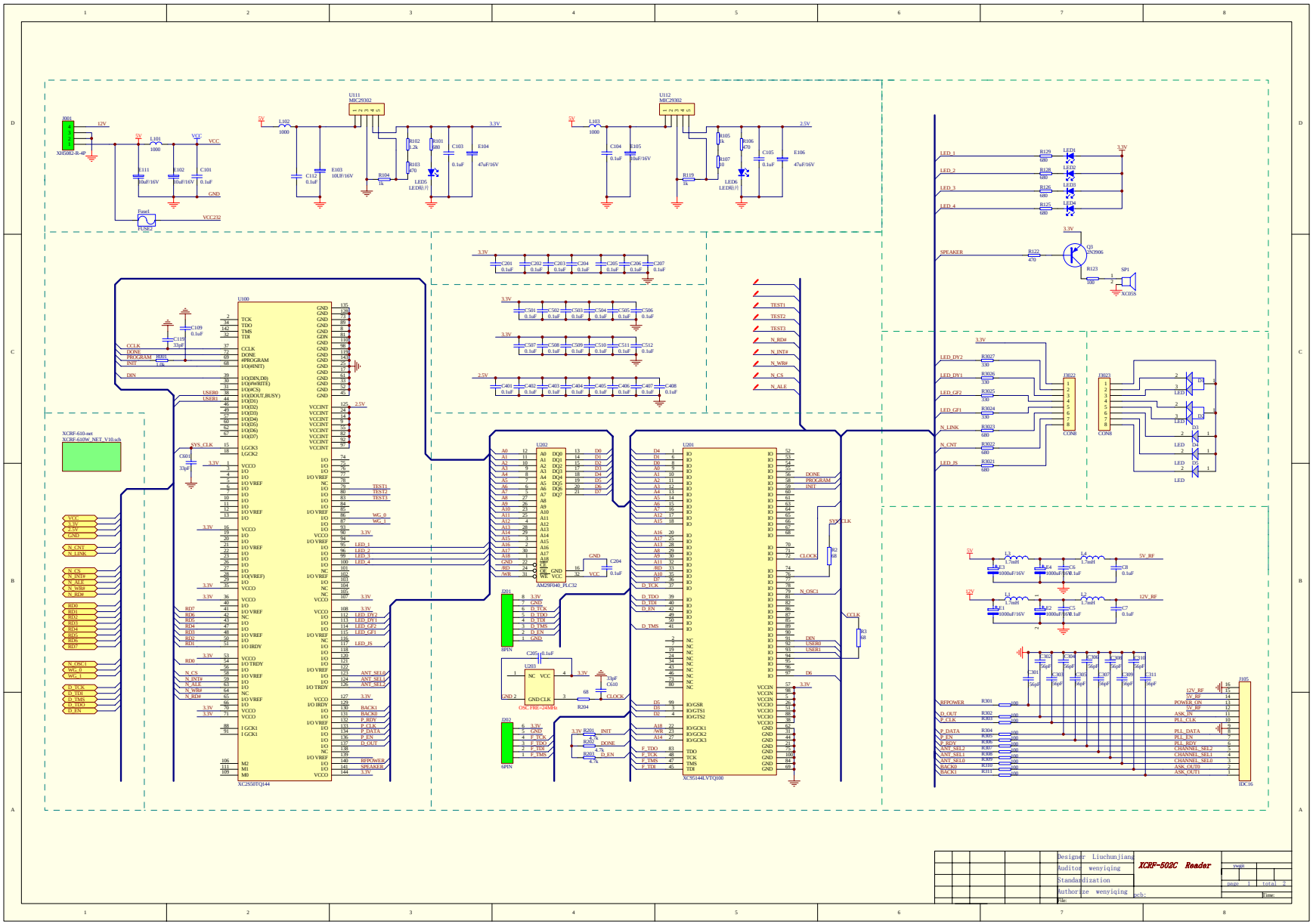
XCRF-610-net
XCRF-610W_NET_V10.sch
U100
XC2S50TQ144
U201
XC95144LVTQ100
U202
AM29F040_PLCC32
U111
MIC29302
U112
MIC29302
J001
XDE082-R-4P
J002
6PIN
J003
8PIN
J005
IDC16
U203
OSC_FRE=24MHz
Fuse1
FUSE2
LED25
LED26
LED1
LED2
LED3
LED4
Q3
2N2906
SP1
XCDS
D022
CON8
D023
CON8
TEST1
TEST2
TEST3
N_RD#
N_INT#
N_WR#
N_CS
N_ALE
LED_1
LED_2
LED_3
LED_4
LED_DY2
LED_DY1
LED_GF2
LED_GF1
N_LINK
N_CNT
LED_JS
SPEAKER
DONE
PROGRAM
INIT
CLOCK
N_OSC1
DIN
USER0
USER1
D6
CCLK
SYS_CLK
RFPOWER
D_OUT
P_CLK
P_DATA
P_EN
P_RDY
ANT_SEL2
ANT_SEL1
ANT_SEL0
BACK0
BACK1
12V_RF
5V_RF
POWER_ON
ASK_IN
PLL_CLK
PLL_DATA
PLL_EN
PLL_RDY
CHANNEL_SEL2
CHANNEL_SEL1
CHANNEL_SEL0
ASK_OUT0
ASK_OUT1
Designer Liuchunjiang
Auditor wenyiqing
Standardization
Authorize wenyiqing
XCRF-502C Reader
Sheet 1 total 2

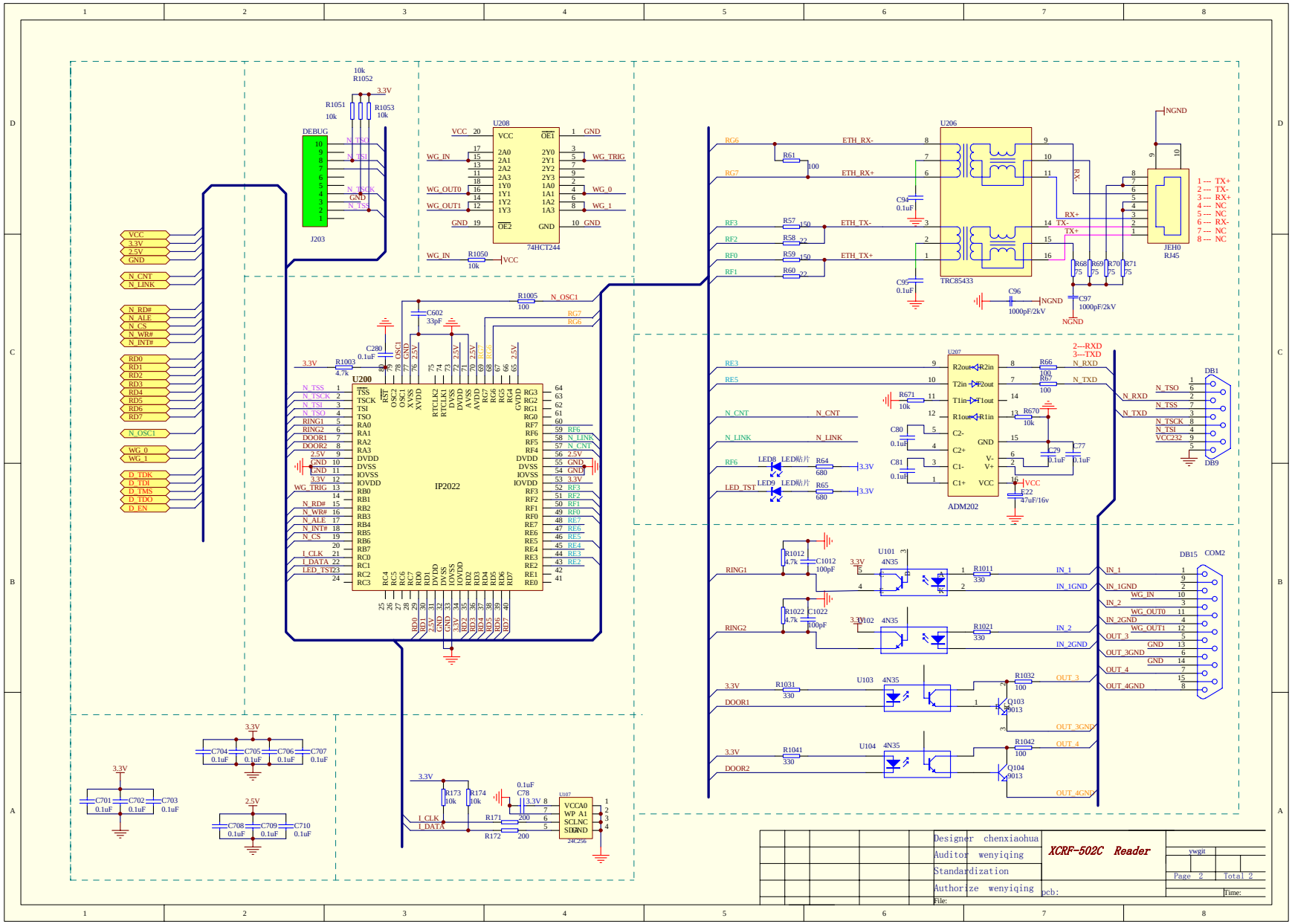
U200
IP2022
U208
74HCT244
U206
TRC85433
JEH0
RJ45
U207
ADM202
DB1
DB9
DB15
COM2
J203
DEBUG
U101
U102
U103
U104
4N35
Q103
Q104
9013
U107
24C256
1 --- TX+
2 --- TX-
3 --- RX+
4 --- NC
5 --- NC
6 --- RX-
7 --- NC
8 --- NC
2---RXD
3---TXD
Designer chenxiaohua
Auditor wenyiqing
Standardization
Authorize wenyiqing
XCRF-502C Reader
pcb:
File:
ywgit
Page 2
Total 2
Time: