SGS Korea Co., Ltd.
4, LS-ro 182beon-gil, Gunpo-si, Gyeonggi-do, Korea, 15807
Tel. +82 31 428 5700 / Fax. +82 31 427 2370
http://www.sgsgroup.kr

TEST REPORT

of

FCC Part 2 Subpart J, Part 22 Subpart C/H and Part 27 Subpart C
IC RSS-132 Issue 3, RSS-139 Issue 4,
RSS-199 Issue 3 and RSS-Gen Issue 5

FCC ID: TQ8LI99700200
IC Certification: 5074A-LI99700200

Equipment Under Test	:	Mission Service Platform
Model Name	:	LI99700200
Variant Model Name(s)	:	-
Applicant	:	FCC: HYUNDAI MOBIS CO., LTD. IC: Hyundai MOBIS Co., Ltd
Manufacturer	:	Hyundai Mobis Co., Ltd.
Date of Receipt	:	2022.07.11
Date of Test(s)	:	2022.07.11 ~ 2023.02.24
Date of Issue	:	2023.02.28

In the configuration tested, the EUT complied with the standards specified above. This test report does not assure KOLAS accreditation.

1) The results of this test report are effective only to the items tested.
2) The SGS Korea is not responsible for the sampling, the results of this test report apply to the sample as received.
3) This test report cannot be reproduced, except in full, without prior written permission of the Company.
4) The data marked ※ in this report was provided by the customer and may affect the validity of the test results.
We are responsible for all the information of this test report except for the data(※) provided by the customer.

Tested by: **Murphy Kim**

Technical Manager: **Jinhyoung Cho**

SGS Korea Co., Ltd. Gunpo Laboratory

INDEX

Table of Contents Page

1. General Information ---------- 3

2. E.R.P. / E.I.R.P. & Radiated Spurious Emissions ---------- 14

3. Conducted Output Power ---------- 38

4. Occupied Bandwidth ---------- 55

5. Peak-Average Ratio ---------- 69

6. Spurious Emissions at Antenna Terminal ---------- 78

7. Band Edge and Emission Mask ---------- 85

8. Frequency Stability ---------- 142

1. General Information

1.1. Testing Laboratory

SGS Korea Co., Ltd. (Gunpo Laboratory)
- 10-2, LS-ro 182beon-gil, Gunpo-si, Gyeonggi-do, Korea, 15807
- 4, LS-ro 182beon-gil, Gunpo-si, Gyeonggi-do, Korea, 15807
- Designation number: KR0150

All SGS services are rendered in accordance with the applicable SGS conditions of service available on request and accessible at http://www.sgs.com/en/Terms-and-Conditions.aspx.

Phone No. : +82 31 688 0901
Fax No. : +82 31 688 0921

1.2. Details of Applicant

FCC Applicant : HYUNDAI MOBIS CO., LTD.
FCC Address : 203, Teheran-ro, Gangnam-gu, Seoul, South Korea, 135-977
IC Applicant : Hyundai MOBIS Co., Ltd
IC Address : 203, Teheran-ro, Gangnam-gu, Seoul, 135-977, Korea(Republic Of)
Contact Person : Choe, Seung-hoon
Phone No. : +82 31 260 0098

1.3. Details of Manufacturer

Company : Hyundai Mobis Co., Ltd.
Address : 203, Teheran-ro, Gangnam-gu, Seoul, 06141, Republic of Korea

1.4. Description of EUT

Kind of Product	Mission Service Platform
Model Name	LI99700200
Serial Number	863789050097240
Power Supply	DC 12.7 V
Rated Power	LTE Band 2, 4, 5, 7, 12, 13, 14, 25, 26, 66, 71: 23 ㎧m
Frequency Range	LTE Band 2: 1 850 ㎒ ~ 1 910 ㎒ LTE Band 4: 1 710 ㎒ ~ 1 755 ㎒ LTE Band 5: 824 ㎒ ~ 849 ㎒ LTE Band 7: 2 500 ㎒ ~ 2 570 ㎒ LTE Band 12: 699 ㎒ ~ 716 ㎒ LTE Band 13: 777 ㎒ ~ 787 ㎒ LTE Band 14: 788 ㎒ ~ 798 ㎒ LTE Band 25: 1 850 ㎒ ~ 1 915 ㎒ LTE Band 26(FCC Only): 814 ㎒ ~ 824 ㎒ LTE Band 26: 824 ㎒ ~ 849 ㎒ LTE Band 66: 1 710 ㎒ ~ 1 780 ㎒ LTE Band 71: 663 ㎒ ~ 698 ㎒
Uplink CA Bands	5B, 7C, 66B, 66C
Modulation Technique	QPSK, 16QAM, 64QAM
Antenna Type	Monopole Antenna
Antenna Gain※	Refer to the clause 1.14
H/W Version	1.0
S/W Version	1.0
FVIN	N/A

1.5. Test Equipment List

Equipment	Manufacturer	Model	S/N	Cal. Date	Cal. Interval	Cal. Due
Signal Generator	R&S	SMA100B	106887	Oct. 13, 2022	Annual	Oct. 13, 2023
Signal Generator	R&S	SMBV100A	255834	May 25, 2022	Annual	May 25, 2023
Spectrum Analyzer	R&S	FSV30	103210	Dec. 07, 2022	Annual	Dec. 07, 2023
Spectrum Analyzer	Agilent	N9020A	MY53421758	Aug. 26, 2022	Annual	Aug. 26, 2023
Spectrum Analyzer	Agilent	N9030A	US51350132	Nov. 11, 2022	Annual	Nov. 11, 2023
Mobile Test Unit	R&S	CMW 500	144034	Feb. 17, 2023	Annual	Feb. 17, 2024
Communication Analyzer	Anritsu	MT8821C	6262192291	Oct. 11, 2022	Annual	Oct. 11, 2023
Power Meter	Anritsu	ML2495A	1223004	Nov. 29, 2022	Annual	Nov. 29, 2023
Power Sensor	Anritsu	MA2411B	1207272	May 27, 2022	Annual	May 27, 2023
Temperature Chamber	ESPEC CORP.	SH-662	93000533	Jun. 02, 2022	Annual	Jun. 02, 2023
Low Pass Filter	Mini-Circuits	NLP-1200+	V 8979400903-2	Feb. 09, 2023	Annual	Feb. 09, 2024
High Pass Filter	Wainwright Instrument GmbH	WHKX10-900-1000-18000-40SS	7	Mar. 04, 2022	Annual	Mar. 04, 2023
High Pass Filter	Wainwright Instrument GmbH	WHKX2.2/12.75G-10SS	8	Mar. 04, 2022	Annual	Mar. 04, 2023
High Pass Filter	Wainwright Instrument GmbH	WHKX3.0/18G-6SS	21	Jun. 09, 2022	Annual	Jun. 09, 2023
High Pass Filter	Wainwright Instrument GmbH	WHNX7.5/26.5G-6SS	11	Oct. 24, 2022	Annual	Oct. 24, 2023
BRIDGE COUPLER	MARKI MICROWAVE INC	CBR16-0012	1542	May 06, 2022	Annual	May 06, 2023
Directional Coupler	KRYTAR	152613	122660	Jul. 06, 2022	Annual	Jul. 06, 2023
DC Power Supply	R&S	HMP2020	102130	Apr. 22, 2022	Annual	Apr. 22, 2023
Preamplifier	H.P.	8447F	2944A03909	Aug. 04, 2022	Annual	Aug. 04, 2023
Preamplifier	R&S	SCU 18	10117	Jun. 13, 2022	Annual	Jun. 13, 2023
Preamplifier	MITEQ Inc.	JS44-18004000-35-8P	1546891	Sep. 27, 2022	Annual	Sep. 27, 2023
Test Receiver	R&S	ESCI 7	100911	Feb. 23, 2022	Annual	Feb. 23, 2023
Loop Antenna	Schwarzbeck Mess-Elektronik	FMZB 1519	1519-039	Aug. 23, 2021	Biennial	Aug. 23, 2023
Bilog Antenna	Schwarzbeck Mess-Elektronik	VULB9163	01126	Feb. 09, 2023	Annual	Feb. 09, 2024
Horn Antenna	R&S	HF906	100326	Feb. 18, 2022	Annual	Feb. 18, 2023
Horn Antenna	R&S	HF907	102270	Mar. 03, 2022	Annual	Mar. 03, 2023
Horn Antenna	Schwarzbeck Mess-Elektronik	BBHA 9170	9170-540	Nov. 30, 2022	Annual	Nov. 30, 2023
Antenna Master	Innco systems GmbH	MA4640-XP-ET	MA4640/536/383 30516/L	N.C.R.	N/A	N.C.R.
Turn Table	Innco systems GmbH	DS 1200S	N/A	N.C.R.	N/A	N.C.R.
Controller	Innco systems GmbH	CONTROLLER CO3000-4P	CO3000/963/383 30516/L	N.C.R.	N/A	N.C.R.
Anechoic Chamber	SY Corporation	L × W × H (9.6 m × 6.4 m × 6.6 m)	N/A	N.C.R.	N/A	N.C.R.
Coaxial Cable	RFONE	MWX221-NMSNMS (4 m)	J1023142	Oct. 04, 2022	Semi-Annual	Apr. 04, 2023
Coaxial Cable	Qualwave Inc.	QA500-18-NN-10 (10 m)	22200114	Oct. 04, 2022	Semi-Annual	Apr. 04, 2023
Coaxial Cable	RADIALL	TESTPRO 3	182287	Feb. 18, 2023	Semi-Annual	Aug. 18, 2023
Coaxial Cable	RADIALL	TESTPRO 3	182288	Feb. 18, 2023	Semi-Annual	Aug. 18, 2023
Coaxial Cable	RADIALL	TESTPRO 3	182291	Feb. 18, 2023	Semi-Annual	Aug. 18, 2023

Note;
- For equipment listed above that has a calibration date or calibration due date that falls within the test date range, care was taken to ensure that this equipment was used after the calibration date and before the calibration due date.

1.6. Summary of Test Results

The EUT has been tested according to the following specifications:

APPLIED STANDARD: FCC Part 2, 22 and 27 / IC RSS-Gen Issue 5, RSS-132 Issue 3, RSS-139 Issue 4 and RSS-199 Issue 3			
Section in FCC	**Section in IC**	**Test Item(s)**	**Result**
§22.913(a)(5) §27.50(d)(4) §27.50(h)(2)	RSS-132 Issue 3 5.4 RSS-139 Issue 4 5.5 RSS-199 Issue 3 4.4	E.R.P. / E.I.R.P.	Complied
§22.917(a) §27.53(h)(1) §27.53(m)(4)	RSS-132 Issue 3 5.5 RSS-139 Issue 4 5.6 RSS-199 Issue 3 4.5	Radiated Spurious Emissions	Complied
§2.1046	RSS-Gen Issue 5 6.12	Conducted Output Power	Complied[1)]
§2.1049	RSS-Gen Issue 5 6.7	Occupied Bandwidth	Complied[1)]
§22.913(d) §27.50(d)(5)	RSS-132 Issue 3 5.4 RSS-139 Issue 4 5.5 RSS-199 Issue 3 4.4	Peak-Average Ratio	Complied[1)]
§22.917(a) §27.53(h)(1) §27.53(m)(4)	RSS-132 Issue 3 5.5 RSS-139 Issue 4 5.6 RSS-199 Issue 3 4.5	Spurious Emission at Antenna Terminal	Complied[1)]
§22.917(a) §27.53(h)(1) §27.53(m)(4)	RSS-132 Issue 3 5.5 RSS-139 Issue 4 5.6 RSS-199 Issue 3 4.5	Band Edge and Emission Mask	Complied[1)]
§2.1055 §22.355 §27.54	RSS-Gen Issue 5 6.11 RSS-132 Issue 3 5.3 RSS-139 Issue 4 5.4 RSS-199 Issue 3 4.3	Frequency Stability	Complied[1)]

Note;

1) The test items referenced from the LI99700020 (FCC ID: TQ8LI99700020 and IC Certification: 5074A-LI99700020).

The applicant takes full responsibility that the test data as referenced in this report represent compliance for this FCC ID and IC Certification.

Except for following, all other surrounding circuity and layout are identical between LI99700200 and LI99700020.

1. LI99700020 has five WWAN modules but LI99700200 has two WWAN modules removed from three WWAN modules.

2. LI99700200 has different antennas from LI99700020.

The test results of LI99700020 (FCC ID: TQ8LI99700020 and IC certification: 5074A-LI99700020) were submitted for this application.

1.7. Sample Calculation for Offset

Where relevant, the following sample calculation is provided:

1.7.1. Conducted Test

Offset value (dB) = Directional Coupler (dB) + Cable loss (dB)

1.7.2. Radiation test

- E.I.R.P. (dB m) = Measured level (dBμV) + Antenna factor (dB/m) + Cable loss (dB) + 20 Log D - 104.8; where D is the measurement distance in meters.
- E.R.P. (dB m) = E.I.R.P. (dB m) - 2.15 (dB)

1.8. Manufacturer Declaration

EUT has two (SIM1 and SIM2) ports each with a port-specific antenna.

1.9. The Test Channel Details

The EUT supports with carrier aggregation uplink. Intra-Band contiguous specification as below

E-UTRA Intra-Band CA configuration / Bandwidth combination set			
E-UTRA CA Configuration	Channel bandwidth for carrier (MHz)	Channel bandwidth for carrier (MHz)	Maximum aggregated bandwidth (MHz)
CA_5B	3	5	8
	5	3	
	5	10	15
	10	5	
	10	10	20
CA_7C	10	20	30
	20	10	
	15	15	
	15	10	25
	15	20	35
	20	15	
	20	20	40
CA_66B	5	5	10
	5	10	15
	10	5	
	5	15	20
	15	5	
	10	10	
CA_66C	10	15	25
	15	10	
	10	20	30
	20	10	
	15	15	
	15	20	35
	20	15	
	20	5	25
	5	20	
	20	20	40

1.10. Worst Case Configuration and Mode

Since all ports have the same module, representatively, all test items were performed on port 1. Radiated spurious emissions were tested separately because the antennas are all different.

The worst-case is based on the conducted output power measurement investigation results. All testing was performed using QPSK and 16QAM modulations. However, the spurious radiated emission and spurious at antenna terminal were only performed on bandwidth and RB offset (with RB size 1) with the highest conducted power in QPSK.

The peak to average ratio were tested only 64QAM modulation as worst case.

The radiation test of the EUT was investigated in three orthogonal orientations X, Y, and Z, and the worst case data is reported.

1.11. Measurement Configuration

Test Items	Band	Test Channel			Bandwidth (MHz)								Modulation			RB #		
		Low	Mid	High	8	10	15	20	25	30	35	40	QPSK	16QAM	64QAM	1	Half	Full
Conducted Output Power	5B	V	V	V	V		V	V					V	V	-	V	-	V
	7C	V	V	V					V	V	V	V	V	V	-	V	-	V
	66B	V	V	V		V	V	V					V	V	-	V	-	V
	66C	V	V	V					V	V	V	V	V	V	-	V	-	V
Frequency Stability	5B	-	V	-	V		V	V					V	–	–	-	-	V
	7C	-	V	-					V	V	V	V	V	–	–	-	-	V
	66B	-	V	-		V	V	V					V	–	–	-	-	V
	66C	-	V	-					V	V	V	V	V	–	–	-	-	V
Occupied Bandwidth	5B	-	V	-	V		V	V					V	V	–	-	-	V
	7C	-	V	-					V	V	V	V	V	V	–	-	-	V
	66B	-	V	-		V	V	V					V	V	–	-	-	V
	66C	-	V	-					V	V	V	V	V	V	–	-	-	V
Peak-to-Average Ratio	5B	-	V	-	V		V	V					-	-	V	-	-	V
	7C	-	V	-					V	V	V	V	-	-	V	-	-	V
	66B	-	V	-		V	V	V					-	-	V	-	-	V
	66C	-	V	-					V	V	V	V	-	-	V	-	-	V
Band edge	5B	V	-	V	V		V	V					V	V	–	–	–	V
	7C	V	-	V					V	V	V	V	V	V	–	–	–	V
	66B	V	-	V		V	V	V					V	V	–	–	–	V
	66C	V	-	V					V	V	V	V	V	V	–	–	–	V
Spurious at antenna terminal & Radiated Spurious Emissions	5B	V	V	V	Worst Case													
	7C	V	V	V	Worst Case													
	66B	V	V	V	Worst Case													
	66C	V	V	V	Worst Case													

1.12. Measurement Uncertainty

Where relevant, the following measurement uncertainty levels have been estimated for tests performed on the apparatus:

Parameter	Uncertainty	
RF Output Power	0.32 dB	
Occupied Bandwidth	3.90 kHz	
Conducted Spurious Emissions	0.61 dB	
Peak to Average Ratio	0.60 dB	
Frequency Stability	5.97 kHz	
Radiated Emission, 9 kHz to 30 MHz	H	3.40 dB
	V	3.40 dB
Radiated Emission, below 1 GHz	H	4.50 dB
	V	5.10 dB
Radiated Emission, above 1 GHz	H	3.70 dB
	V	3.90 dB

All measurement uncertainty values are shown with a coverage factor of *k*=2 to indicate a 95 % level of confidence.

1.13. Test Report Revision

Revision	Report Number	Date of Issue	Description
0	F690501-RF-RTL003856	2023.02.28	Initial

1.14. Antenna Designation

Operating Frequency (㎒)		Antenna Peak Gain (dBi)			
		Ant. No	Ant. Gain	Cable Loss[1)]	Final Gain[2)]
CA_5B	824 ~ 849	Ant. 1	1.98	0.72	1.26
		Ant. 2	1.80	0.72	1.08
CA_7C	2 500 ~ 2 570	Ant. 1	3.53	1.21	2.32
		Ant. 2	2.67	1.21	1.46
CA_66B	1 710 ~ 1 780	Ant. 1	-1.48	1.08	-2.56
		Ant. 2	-0.95	1.08	-2.03
CA_66C	1 710 ~ 1 780	Ant. 1	-1.48	1.08	-2.56
		Ant. 2	-0.95	1.08	-2.03

Note;
1) It is a cable that is permanently connected between the antenna and the EUT
2) In this report, Final gain reflecting the cable loss was used.

1.15. Emission Designator and Max Power

ANT1

Band	Band width (㎒)	Modulation	Low Freq. (㎒)	Upper Freq. (㎒)	Conducted Average (dB m)	Ant. Gain (dB i)	E.R.P. / E.I.R.P. Average (dB m)	E.R.P. / E.I.R.P. Average (W)	Emission Designator
CA_5B	3+5	QPSK	825.6	846.5	22.20	1.26	23.46	0.222	7M45G7D
		16QAM			21.62		22.88	0.194	7M45D7D
	5+3	QPSK	825.6	847.4	22.20		23.46	0.222	7M47G7D
		16QAM			21.85		23.11	0.205	7M45D7D
	5+10	QPSK	826.8	844.0	24.22		25.48	0.353	13M8G7D
		16QAM			23.51		24.77	0.300	13M8D7D
	10+5	QPSK	829.0	846.2	24.25		25.51	0.356	13M8G7D
		16QAM			23.60		24.86	0.306	13M8D7D
	10+10	QPSK	829.0	844.0	24.29		25.55	0.359	18M7G7D
		16QAM			23.65		24.91	0.310	18M7D7D
CA_7C	10+20	QPSK	2 505.5	2 560.0	24.21	2.32	26.53	0.450	27M6G7D
		16QAM			23.42		25.74	0.375	27M6D7D
	20+10	QPSK	2 510.0	2 564.5	24.18		26.50	0.447	27M7G7D
		16QAM			23.38		25.70	0.372	27M6D7D
	15+15	QPSK	2 507.5	2 562.5	24.22		26.54	0.451	28M2G7D
		16QAM			23.41		25.73	0.374	28M2D7D
	15+10	QPSK	2 507.5	2 564.7	24.22		26.54	0.451	23M0G7D
		16QAM			23.40		25.72	0.373	23M1D7D
	15+20	QPSK	2 507.8	2 560.0	24.26		26.58	0.455	32M7G7D
		16QAM			23.40		25.72	0.373	32M6D7D
	20+15	QPSK	2 510.0	2 562.2	24.28		26.60	0.457	32M7G7D
		16QAM			23.41		25.73	0.374	32M6D7D
	20+20	QPSK	2 510	2 560	24.32		26.64	0.461	37M4G7D
		16QAM			23.46		25.78	0.378	37M5D7D
CA_66B	5+5	QPSK	1 712.5	1 777.5	23.56	-2.56	21.00	0.126	9M23G7D
		16QAM			22.68		20.12	0.103	9M21D7D
	5+10	QPSK	1 712.8	1 775.0	23.71		21.15	0.130	13M9G7D
		16QAM			22.84		20.28	0.107	13M9D7D
	10+5	QPSK	1 715.0	1 777.2	23.65		21.09	0.129	13M9G7D
		16QAM			22.89		20.33	0.108	13M9D7D
	5+15	QPSK	1 713.0	1 772.5	23.72		21.16	0.131	18M2G7D
		16QAM			22.85		20.29	0.107	18M1D7D
	15+5	QPSK	1 717.5	1 777.0	23.71		21.15	0.130	18M2G7D
		16QAM			22.88		20.32	0.108	18M3D7D
	10+10	QPSK	1 715.0	1 775.0	23.77		21.21	0.132	18M7G7D
		16QAM			22.92		20.36	0.109	18M8D7D

Band	Band width (㎒)	Modulation	Low Freq. (㎒)	Upper Freq. (㎒)	Conducted Average (dB m)	Ant. Gain (dB i)	E.R.P. / E.I.R.P. Average (dB m)	E.R.P. / E.I.R.P. Average (W)	Emission Designator
CA_66C	10+15	QPSK	1 715.3	1 772.5	23.91	-2.56	21.35	0.136	23M1G7D
		16QAM			23.02		20.46	0.111	23M0D7D
	15+10	QPSK	1 717.5	1 774.7	23.90		21.34	0.136	23M0G7D
		16QAM			22.98		20.42	0.110	23M1D7D
	10+20	QPSK	1 715.5	1 770.0	23.90		21.34	0.136	27M6G7D
		16QAM			22.89		20.33	0.108	27M6D7D
	20+10	QPSK	1 720.0	1 774.5	23.86		21.30	0.135	27M8G7D
		16QAM			22.84		20.28	0.107	27M7D7D
	15+15	QPSK	1 717.5	1 772.5	23.89		21.33	0.136	28M4G7D
		16QAM			22.95		20.39	0.109	28M2D7D
	15+20	QPSK	1 717.8	1 770.0	23.87		21.31	0.135	32M7G7D
		16QAM			22.96		20.40	0.110	32M7D7D
	20+15	QPSK	1 720.0	1 772.2	23.81		21.25	0.133	32M7G7D
		16QAM			22.95		20.39	0.109	32M7D7D
	20+5	QPSK	1 720.0	1 776.7	23.88		21.32	0.136	22M8G7D
		16QAM			22.89		20.33	0.108	22M9D7D
	5+20	QPSK	1 713.3	1 770.0	23.87		21.31	0.135	22M7G7D
		16QAM			22.92		20.36	0.109	22M7D7D
	20+20	QPSK	1 720.0	1 770.0	23.92		21.36	0.137	37M5G7D
		16QAM			23.04		20.48	0.112	37M6D7D

ANT2

Band	Band width (㎒)	Modulation	Low Freq. (㎒)	Upper Freq. (㎒)	Conducted Average (dB m)	Ant. Gain (dB i)	E.R.P. / E.I.R.P. Average (dB m)	E.R.P. / E.I.R.P. Average (W)	Emission Designator
CA_5B	3+5	QPSK	825.6	846.5	22.20	1.08	23.28	0.213	7M45G7D
		16QAM			21.62		22.70	0.186	7M45D7D
	5+3	QPSK	825.6	847.4	22.20		23.28	0.213	7M47G7D
		16QAM			21.85		22.93	0.196	7M45D7D
	5+10	QPSK	826.8	844.0	24.22		25.30	0.339	13M8G7D
		16QAM			23.51		24.59	0.288	13M8D7D
	10+5	QPSK	829.0	846.2	24.25		25.33	0.341	13M8G7D
		16QAM			23.60		24.68	0.294	13M8D7D
	10+10	QPSK	829.0	844.0	24.29		25.37	0.344	18M7G7D
		16QAM			23.65		24.73	0.297	18M7D7D
CA_7C	10+20	QPSK	2 505.5	2 560.0	24.21	1.46	25.67	0.369	27M6G7D
		16QAM			23.42		24.88	0.308	27M6D7D
	20+10	QPSK	2 510.0	2 564.5	24.18		25.64	0.366	27M7G7D
		16QAM			23.38		24.84	0.305	27M6D7D
	15+15	QPSK	2 507.5	2 562.5	24.22		25.68	0.370	28M2G7D
		16QAM			23.41		24.87	0.307	28M2D7D
	15+10	QPSK	2 507.5	2 564.7	24.22		25.68	0.370	23M0G7D
		16QAM			23.40		24.86	0.306	23M1D7D
	15+20	QPSK	2 507.8	2 560.0	24.26		25.72	0.373	32M7G7D
		16QAM			23.40		24.86	0.306	32M6D7D
	20+15	QPSK	2 510.0	2 562.2	24.28		25.74	0.375	32M7G7D
		16QAM			23.41		24.87	0.307	32M6D7D
	20+20	QPSK	2 510	2 560	24.32		25.78	0.378	37M4G7D
		16QAM			23.46		24.92	0.310	37M5D7D
CA_66B	5+5	QPSK	1 712.5	1 777.5	23.56	-2.03	21.53	0.142	9M23G7D
		16QAM			22.68		20.65	0.116	9M21D7D
	5+10	QPSK	1 712.8	1 775.0	23.71		21.68	0.147	13M9G7D
		16QAM			22.84		20.81	0.121	13M9D7D
	10+5	QPSK	1 715.0	1 777.2	23.65		21.62	0.145	13M9G7D
		16QAM			22.89		20.86	0.122	13M9D7D
	5+15	QPSK	1 713.0	1 772.5	23.72		21.69	0.148	18M2G7D
		16QAM			22.85		20.82	0.121	18M1D7D
	15+5	QPSK	1 717.5	1 777.0	23.71		21.68	0.147	18M2G7D
		16QAM			22.88		20.85	0.122	18M3D7D
	10+10	QPSK	1 715.0	1 775.0	23.77		21.74	0.149	18M7G7D
		16QAM			22.92		20.89	0.123	18M8D7D

Band	Band width (㎒)	Modulation	Low Freq. (㎒)	Upper Freq. (㎒)	Conducted Average (dB m)	Ant. Gain (dB i)	E.R.P. / E.I.R.P. Average (dB m)	E.R.P. / E.I.R.P. Average (W)	Emission Designator
CA_66C	10+15	QPSK	1 715.3	1 772.5	23.91	-2.03	21.88	0.154	23M1G7D
		16QAM			23.02		20.99	0.126	23M0D7D
	15+10	QPSK	1 717.5	1 774.7	23.90		21.87	0.154	23M0G7D
		16QAM			22.98		20.95	0.124	23M1D7D
	10+20	QPSK	1 715.5	1 770.0	23.90		21.87	0.154	27M6G7D
		16QAM			22.89		20.86	0.122	27M6D7D
	20+10	QPSK	1 720.0	1 774.5	23.86		21.83	0.152	27M8G7D
		16QAM			22.84		20.81	0.121	27M7D7D
	15+15	QPSK	1 717.5	1 772.5	23.89		21.86	0.153	28M4G7D
		16QAM			22.95		20.92	0.124	28M2D7D
	15+20	QPSK	1 717.8	1 770.0	23.87		21.84	0.153	32M7G7D
		16QAM			22.96		20.93	0.124	32M7D7D
	20+15	QPSK	1 720.0	1 772.2	23.81		21.78	0.151	32M7G7D
		16QAM			22.95		20.92	0.124	32M7D7D
	20+5	QPSK	1 720.0	1 776.7	23.88		21.85	0.153	22M8G7D
		16QAM			22.89		20.86	0.122	22M9D7D
	5+20	QPSK	1 713.3	1 770.0	23.87		21.84	0.153	22M7G7D
		16QAM			22.92		20.89	0.123	22M7D7D
	20+20	QPSK	1 720.0	1 770.0	23.92		21.89	0.155	37M5G7D
		16QAM			23.04		21.01	0.126	37M6D7D

2. E.R.P. / E.I.R.P. & Radiated Spurious Emissions

2.1. Test setup

The diagram below shows the test setup that is utilized to make the measurements for emission from 9 ㎑ to 30 ㎒.

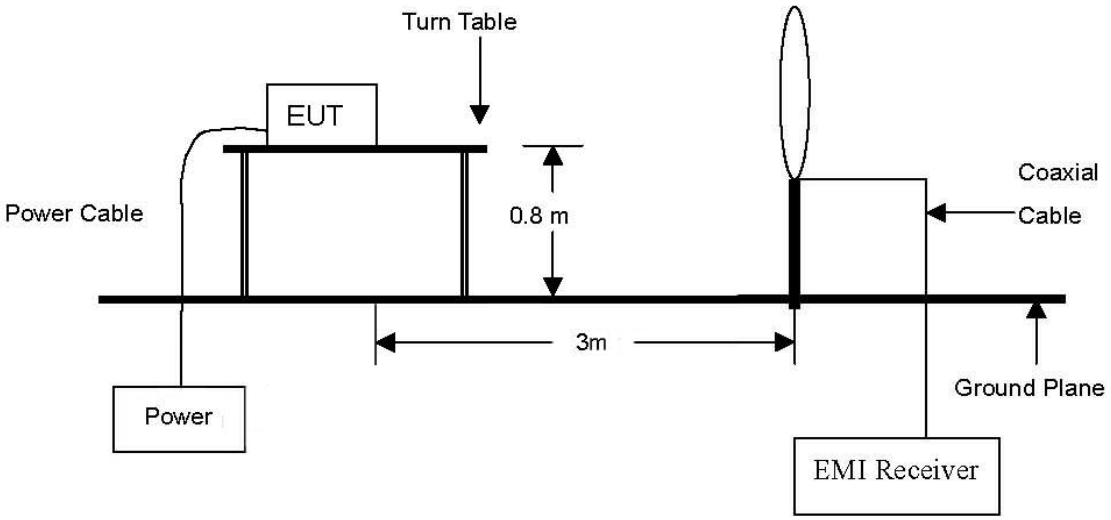

The diagram below shows the test setup that is utilized to make the measurements for emission from 30 ㎒ to 1 ㎓ Emissions.

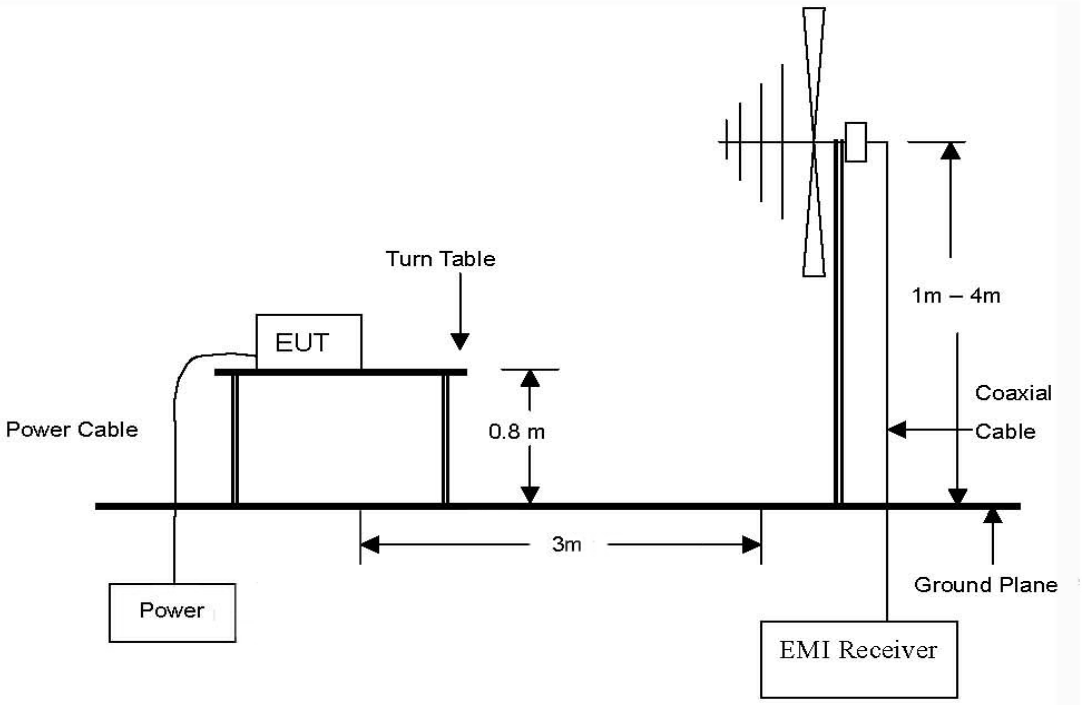

The diagram below shows the test setup that is utilized to make the measurements for emission from 1 ㎓ to 26 ㎓ Emissions.

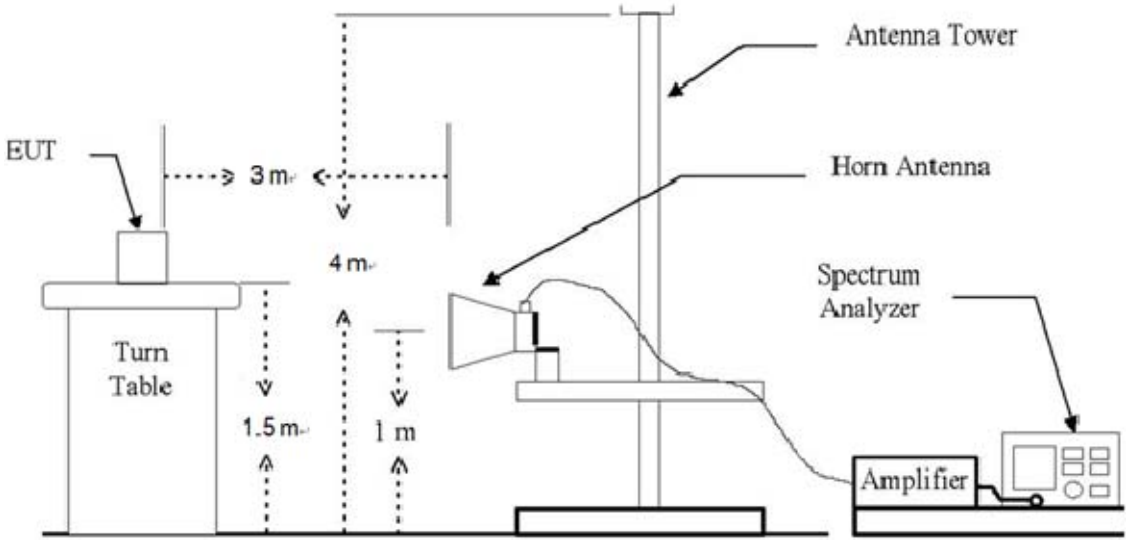

2.2. Limit

2.2.1. Limit of E.R.P. / E.I.R.P.

FCC
- §22.913(a)(5), the ERP of mobile transmitters and auxiliary test transmitters must not exceed 7 watts.

- §27.50(d)(4), fixed, mobile, and portable (hand-held) stations operating in the 1 710-1 755 ㎒ band and mobile and portable stations operating in the 1 695-1 710 ㎒ and 1 755-1 780 ㎒ bands are limited to 1 watt EIRP.

- §27.50(h)(2), Mobile and other user stations. Mobile stations are limited to 2.0 watts EIRP. All user stations are limited to 2.0 watts transmitter output power.

IC
- RSS-132 Issue 3
5.4, the transmitter output power shall be measured in terms of average power.
The equivalent isotropically radiated power (e.i.r.p.) for mobile equipment shall not exceed 11.5 watts.
Refer to SRSP-503 for base station e.i.r.p. limits.

- RSS-139 Issue 4
5.5, The maximum output power of the equipment shall comply with the limits specified below. In the tables, maximum power refers to the equivalent isotropically radiated power (e.i.r.p.) or total radiated power (TRP), measured in terms of average values.

Table 3: Maximum power of equipment in the band 1 710-1 780 ㎒

Equipment type	Maximum power
Fixed station and base station	30 ㏈m e.i.r.p./ channel bandwidth
Subscriber equipment	30 ㏈m e.i.r.p./ channel bandwidth

- RSS-199 Issue 3
4.4, the transmitter output power shall be measured in terms of average value.
For base station equipment, refer to SRSP-517 for the maximum permissible e.i.r.p.
For mobile subscriber equipment, the e.i.r.p. shall not exceed 2 W. For fixed subscriber equipment, the transmitter output power shall not exceed 2 W and the e.i.r.p. shall be limited to 40 W.

2.2.2. Limit of Radiated Spurious Emissions

FCC

- §22.917(a), the power of any emission outside of the authorized operating frequency ranges must be attenuated below the transmitting power (P) by a factor of at least 43 + 10log(P) ㎧.

- §27.53(h)(1), for operations in the 1 695-1 710 ㎒, 1 710-1 755 ㎒, 1 755-1 780 ㎒, 1 915-1 920 ㎒, 1 995-2 000 ㎒, 2 000-2 020 ㎒, 2 110-2 155 ㎒, 2 155-2 180 ㎒, and 2 180-2 200 bands, the power of any emission outside a licensee's frequency block shall be attenuated below the transmitter power (P) in watts by at least 43 + 10 $\log_{10}$ (P) ㎧.

- §27.53(m)(4), for mobile digital stations, the attenuation factor shall be not less than 40 + 10 $\log_{10}$ (P) ㎧ on all frequencies between the channel edge and 5 megahertz from the channel edge, 43 + 10 $\log_{10}$ (P) ㎧ on all frequencies between 5 megahertz and X megahertz from the channel edge, and 55 + 10 $\log_{10}$ (P) ㎧ on all frequencies more than X megahertz from the channel edge, where X is the greater of 6 megahertz or the actual emission bandwidth as defined in paragraph (m)(6) of this section. In addition, the attenuation factor shall not be less that 43 + 10 $\log_{10}$ (P) ㎧ on all frequencies between 2 490.5 ㎒ and 2 496 ㎒ and 55 + 10 $\log_{10}$ (P) ㎧ at or below 2 490.5 ㎒. Mobile Satellite Service licensees operating on frequencies below 2 495 ㎒ may also submit a documented interference complaint against BRS licensees operating on channel BRS Channel 1 on the same terms and conditions as adjacent channel BRS or EBS licensees.

IC

- RSS-132 Issue 3

5.5, Mobile and base station equipment shall comply with the limits in (i) and (ii) below.

(i) In the first 1.0 ㎒ band immediately outside and adjacent to each of the sub-bands specified in Section 5.1, the power of emissions per any 1 % of the occupied bandwidth shall be attenuated (in ㎧) below the transmitter output power P (㎧ W) by at least 43 + 10 $\log_{10}$ p (watts).

(ii) After the first 1.0 ㎒ immediately outside and adjacent to each of the sub-bands, the power of emissions in any 100 ㎑ bandwidth shall be attenuated (in ㎧) below the transmitter output power P (㎧ W) by at least 43 + 10 $\log_{10}$ p (watts). If the measurement is performed using 1 % of the occupied bandwidth, power integration over 100 ㎑ is required.

- RSS-139 Issue 4

5.6, Unwanted emissions shall be measured in terms of average values.

For all equipment, the TRP or total conducted power (sum of conducted power across all antenna connectors) of the unwanted emissions outside the frequency block or frequency block group shall not exceed the limits shown in table 6.

Table 3: Unwanted emission limits

Offset from the edge of the frequency block or frequency block group	Unwanted emission limit
1 ㎒	-13 ㎧m/(1% of OB)*
>1 ㎒	-13 ㎧m

* OB is the occupied bandwidth

- RSS-199 Issue 3
4.5, In the 1 ㎒ band immediately outside and adjacent to the channel edge, the unwanted emission power shall be measured with a resolution bandwidth of at least 1% of the occupied bandwidth for base station and fixed subscriber equipment, and 2% for mobile subscriber equipment. Beyond the 1 ㎒ band, a resolution bandwidth of 1 ㎒ shall be used. A narrower resolution bandwidth can be used, provided that the measured power is integrated over the full required measurement bandwidth of 1 ㎒, or 1% or 2% of the occupied bandwidth, as applicable.

Equipment shall comply with the following unwanted emission limits:

for base station and fixed subscriber equipment, the power of any unwanted emissions measured as above shall be attenuated (in ㏈) below the transmitter power, P (㏈ W), by at least 43 + 10 log10 p for mobile subscriber equipment, the power of any unwanted emissions measured as above shall be attenuated (in ㏈) below the transmitter power, P (㏈ W), by at least:

i. 40 + 10 log10 p from the channel edges to 5 ㎒ away
ii. 43 + 10 log10 p between 5 ㎒ and X ㎒ from the channel edges, and
iii. 55 + 10 log10 p at X ㎒ and beyond from the channel edges

In addition, the attenuation shall not be less than 43 + 10 log10 p on all frequencies between 2 490.5 ㎒ and 2 496 ㎒, and 55 + 10 log10 p at or below 2 490.5 ㎒.

In (a) and (b), p is the transmitter power measured in watts and X is 6 ㎒ or the equipment occupied bandwidth, whichever is greater.

2.3. Test Procedure: Based on ANSI/TIA 603E: 2016 and ANSI C63.26-2015 and KDB 971168 D01 Power Meas License Digital Systems v03r01.

1. On a test site, the EUT shall be placed at 0.8 m or 1.5 m height on a turn table, and in the position close to normal use as declared by the applicant.
2. The test antenna shall be oriented initially for vertical polarization located 3 m from EUT to correspond to the fundamental frequency of the transmitter.
3. The output of the test antenna shall be connected to the measuring receiver and the peak detector is used for the measurement.
4. Radiated spurious emissions measurement method was set as follows:
   RBW = 100 ㎑ for emissions below 1 ㎓ and 1 ㎒ for emissions above 1 ㎓, VBW ≥ 3 x RBW,
   Detector = RMS, trace mode = max hold, per the guidelines of KDB 971168 D01 Power Meas License Digital Systems v03r01.
5. The transmitter shall be switched on, the measuring receiver shall be tuned to the frequency of the transmitter under test.
6. The test antenna shall be raised and lowered through the specified range of height until the maximum signal level is detected by the measuring receiver.
7. The transmitter shall be rotated through 360° in the horizontal plane, until the maximum signal level is detected by the measuring receiver.
8. The test antenna shall be raised and lowered again through the specified range of height until the maximum signal level is detected by the measuring receiver.
9. The maximum signal level detected by the measuring receiver shall be noted.
10. In necessary, the input attenuator setting on the measuring receiver shall be adjusted in order to increase the sensitivity of the measuring receiver.
11. The test antenna shall be raised and lowered through the specified range of height to ensure that the maximum signal is received.
12. The measurement shall be repeated with the test antenna orientated for horizontal polarization.

2.4. Test results

Ambient temperature : (23 ± 1) ℃
Relative humidity : 47 % R.H.

2.4.1. E.R.P. / E.I.R.P.

ANT 1

Band	Frequency (㎒)	Maximum Conducted Power (dB m)	Maximum Conducted Power (W)	Antenna Gain (dB i)	Maximum E.I.R.P. (dB m)	Maximum E.I.R.P. (W)	Maximum E.R.P. (dB m)	Maximum E.R.P. (W)	Limit
5B	824 ~ 849	24.29	0.269	0.72	25.01	0.317	22.86	0.193	7 W E.R.P.
7C	2 500 ~ 2 570	24.32	0.270	1.21	25.53	0.357			2 W E.I.R.P.
66B	1 710 ~ 1 780	23.77	0.238	-2.56	21.21	0.132			1 W E.I.R.P.
66C	1 710 ~ 1 780	23.92	0.247	-2.56	21.36	0.137			1 W E.I.R.P.

ANT 2

Band	Frequency (㎒)	Maximum Conducted Power (dB m)	Maximum Conducted Power (W)	Antenna Gain (dB i)	Maximum E.I.R.P. (dB m)	Maximum E.I.R.P. (W)	Maximum E.R.P. (dB m)	Maximum E.R.P. (W)	Limit
5B	824 ~ 849	24.29	0.269	1.08	25.37	0.344	23.22	0.210	7 W E.R.P.
7C	2 500 ~ 2 570	24.32	0.270	1.46	25.78	0.378			2 W E.I.R.P.
66B	1 710 ~ 1 780	23.77	0.238	-2.03	21.74	0.149			1 W E.I.R.P.
66C	1 710 ~ 1 780	23.92	0.247	-2.03	21.89	0.155			1 W E.I.R.P.

Remark;

1. E.I.R.P. (dB m) = Maximum Conducted Power (dB m) + Antenna Gain (dB i)
2. E.R.P. (dB m) = E.I.R.P. (dB m) - 2.15 (dB); where E.R.P. and E.I.R.P. are expressed in consistent units.

2.4.2. Radiated spurious emissions

ANT 1
ULCA_5B

Frequency (㎒)	Measured Level (dBμV)	Ant. Pol.	AF (dB/m)	AMP+CL (dB)	E (dBμV/m)	CF (dB)	E.R.P. (dB m)	Limit (dB m)	Margin (dB)
PCC 10 ㎒ + SCC 10 ㎒_Low Channel (829 ㎒ + 838.9 ㎒)									
1 667.13	59.72	H	25.81	-38.67	46.86	-97.41	-50.55	-13	37.55
1 667.13	61.83	V	25.81	-38.67	48.97	-97.41	-48.44	-13	35.44
1 739.41	48.57	H	26.67	-38.69	36.55	-97.41	-60.86	-13	47.86
2 501.31	59.15	H	28.11	-37.19	50.07	-97.41	-47.34	-13	34.34
2 501.59	63.00	V	28.11	-37.19	53.92	-97.41	-43.49	-13	30.49
3 335.22	61.50	H	30.63	-37.02	55.11	-97.41	-42.31	-13	29.31
3 333.81	69.53	V	30.63	-37.01	63.15	-97.41	**-34.26**	-13	21.26
4 168.56	51.39	H	31.96	-36.21	47.14	-97.41	-50.27	-13	37.27
4 168.56	52.85	V	31.96	-36.21	48.60	-97.41	-48.81	-13	35.81
5 000.22	44.68	V	33.00	-35.26	42.42	-97.41	-54.99	-13	41.99
Above 5 100.00	Not detected	–	–	–	–	–	–	–	–
PCC 10 ㎒ + SCC 10 ㎒_ Middle Channel (831.6 ㎒ + 841.5 ㎒)									
1 672.19	58.26	H	25.87	-38.66	45.47	-97.41	-51.94	-13	38.94
1 673.59	58.94	V	25.88	-38.66	46.16	-97.41	-51.26	-13	38.26
1 874.97	48.02	V	27.45	-38.01	37.46	-97.41	-59.95	-13	46.95
2 508.63	63.43	H	28.15	-37.09	54.49	-97.41	-42.92	-13	29.92
2 508.91	63.53	V	28.15	-37.08	54.60	-97.41	-42.81	-13	29.81
3 345.63	56.07	H	30.61	-36.99	49.69	-97.41	-47.72	-13	34.72
3 345.06	65.40	V	30.61	-37.00	59.01	-97.41	-38.40	-13	25.40
4 181.50	46.98	H	31.94	-36.25	42.67	-97.41	-54.74	-13	41.74
4 181.22	45.84	V	31.94	-36.25	41.53	-97.41	-55.88	-13	42.88
5 000.22	44.68	H	33.00	-35.26	42.42	-97.41	-54.99	-13	41.99
4 999.94	44.88	V	33.00	-35.26	42.62	-97.41	-54.79	-13	41.79
Above 5 100.00	Not detected	–	–	–	–	–	–	–	–

ULCA_5B

Frequency (㎒)	Measured Level (dBμV)	Ant. Pol.	AF (dB/m)	AMP+CL (dB)	E (dBμV/m)	CF (dB)	E.R.P. (dB m)	Limit (dB m)	Margin (dB)
PCC 10 ㎒ + SCC 10 ㎒_ High Channel (834.1 ㎒ + 844.0 ㎒)									
1 677.25	56.87	H	25.93	-38.67	44.13	-97.41	-53.28	-13	40.28
1 677.25	57.54	V	25.93	-38.67	44.80	-97.41	-52.61	-13	39.61
1 737.16	48.05	H	26.65	-38.70	36.00	-97.41	-61.41	-13	48.41
1 875.53	48.72	V	27.45	-38.01	38.16	-97.41	-59.25	-13	46.25
2 424.81	57.15	H	28.15	-36.34	48.96	-97.41	-48.45	-13	35.45
2 516.78	59.85	H	28.20	-36.97	51.08	-97.41	-46.33	-13	33.33
2 516.50	60.25	V	28.20	-36.97	51.48	-97.41	-45.93	-13	32.93
3 356.31	54.89	H	30.61	-36.98	48.52	-97.41	-48.89	-13	35.89
3 355.19	61.13	V	30.61	-36.98	54.76	-97.41	-42.65	-13	29.65
5 000.22	43.81	H	33.00	-35.26	41.55	-97.41	-55.86	-13	42.86
5 000.22	45.30	V	33.00	-35.26	43.04	-97.41	-54.37	-13	41.37
Above 5 100.00	Not detected	–	–	–	–	–	–	–	–

ULCA_7C

Frequency (㎒)	Measured Level (dBμV)	Ant. Pol.	AF (dB/m)	AMP+CL (dB)	E (dBμV/m)	CF (dB)	E.I.R.P. (dB m)	Limit (dB m)	Margin (dB)
PCC 20 ㎒ + SCC 20 ㎒_Low Channel (2 510 ㎒ + 2 529.8 ㎒)									
4 344.80	41.49	V	31.99	-35.89	37.59	-95.26	-57.67	-25	32.67
4 999.70	45.05	V	33.00	-35.26	42.79	-95.26	-52.48	-25	27.48
5 037.70	44.46	H	33.00	-35.22	42.24	-95.26	-53.02	-25	28.02
5 037.70	46.48	V	33.00	-35.22	44.26	-95.26	-51.00	-25	26.00
7 560.50	51.89	H	35.90	-32.70	55.09	-95.26	-40.18	-25	15.18
7 556.30	55.53	V	35.90	-32.72	58.71	-95.26	-36.55	-25	11.55
10 077.20	54.69	H	37.80	-31.52	60.97	-95.26	-34.29	-25	9.29
10 077.70	58.44	V	37.80	-31.52	64.72	-95.26	-30.54	-25	5.54
12 596.30	41.04	H	38.50	-29.42	50.12	-95.26	-45.14	-25	20.14
12 594.40	40.18	V	38.50	-29.39	49.29	-95.26	-45.97	-25	20.97
Above 12 600.00	Not detected	–	–	–	–	–	–	–	–
PCC 20 ㎒ + SCC 20 ㎒_ Middle Channel (2 525.1 ㎒ + 2 544.9 ㎒)									
4 344.80	41.49	V	31.99	-35.89	37.59	-95.26	-57.67	-25	32.67
4 999.70	43.61	V	33.00	-35.26	41.35	-95.26	-53.91	-25	28.91
5 067.70	44.32	H	33.07	-35.28	42.11	-95.26	-53.15	-25	28.15
5 067.70	46.12	V	33.07	-35.28	43.91	-95.26	-51.35	-25	26.35
7 603.60	56.49	H	35.90	-32.62	59.77	-95.26	-35.49	-25	10.49
7 603.60	60.31	V	35.90	-32.62	63.59	-95.26	-31.67	-25	6.67
10 137.70	57.01	H	37.88	-31.61	63.28	-95.26	-31.98	-25	6.98
10 138.10	60.78	V	37.88	-31.61	67.05	-95.26	**-28.21**	-25	3.21
12 671.70	39.77	H	38.64	-28.90	49.51	-95.26	-45.75	-25	20.75
12 669.40	40.78	V	38.64	-28.92	50.50	-95.26	-44.76	-25	19.76
15 207.70	39.09	V	40.28	-24.15	55.22	-95.26	-40.04	-25	15.04
Above 15 300.00	Not detected	–	–	–	–	–	–	–	–

ULCA_7C

Frequency (㎒)	Measured Level (dBμV)	Ant. Pol.	AF (dB/m)	AMP+CL (dB)	E (dBμV/m)	CF (dB)	E.I.R.P. (dB m)	Limit (dB m)	Margin (dB)
PCC 20 ㎒ + SCC 20 ㎒_ High Channel (2 540.2 ㎒ + 2 560 ㎒)									
5 098.10	46.35	H	33.19	-35.41	44.13	-95.26	-51.13	-25	26.13
5 100.00	46.77	V	33.20	-35.42	44.55	-95.26	-50.71	-25	25.71
7 647.20	53.23	H	35.90	-32.43	56.70	-95.26	-38.56	-25	13.56
7 650.90	56.28	V	35.90	-32.41	59.77	-95.26	-35.49	-25	10.49
10 198.10	50.38	H	37.90	-31.60	56.68	-95.26	-38.58	-25	13.58
10 198.10	53.08	V	37.90	-31.60	59.38	-95.26	-35.88	-25	10.88
12 747.20	37.91	V	38.89	-27.74	49.06	-95.26	-46.20	-25	21.20
Above 12 800.00	Not detected	–	–	–	–	–	–	–	–

ULCA_66B

Frequency (㎒)	Measured Level (dBμV)	Ant. Pol.	AF (dB/m)	AMP+CL (dB)	E (dBμV/m)	CF (dB)	E.I.R.P. (dB m)	Limit (dB m)	Margin (dB)
PCC 10 ㎒ + SCC 10 ㎒_Low Channel (1 715 ㎒ + 1 724.9 ㎒)									
3 440.20	52.23	H	31.02	-36.81	46.44	-95.26	-48.82	-13	35.82
3 440.20	52.43	V	31.02	-36.81	46.64	-95.26	-48.62	-13	35.62
5 029.20	51.10	H	33.00	-35.26	48.84	-95.26	-46.43	-13	33.43
4 999.70	43.92	V	33.00	-35.26	41.66	-95.26	-53.60	-13	40.60
5 160.00	60.13	H	33.34	-35.42	58.05	-95.26	-37.21	-13	24.21
5 160.50	64.04	V	33.34	-35.41	61.97	-95.26	-33.29	-13	20.29
5 349.40	54.37	V	33.90	-34.73	53.54	-95.26	-41.72	-13	28.72
5 881.40	47.48	V	34.26	-33.24	48.50	-95.26	-46.76	-13	33.76
6 879.80	46.46	H	35.30	-33.67	48.09	-95.26	-47.17	-13	34.17
6 877.50	51.10	V	35.30	-33.69	52.71	-95.26	-42.55	-13	29.55
8 598.80	61.45	H	36.60	-33.73	64.32	-95.26	-30.94	-13	17.94
8 598.30	69.42	V	36.60	-33.72	72.30	-95.26	**-22.97**	-13	9.96
10 319.10	46.81	H	37.80	-30.98	53.63	-95.26	-41.63	-13	28.63
10 318.10	52.94	V	37.80	-31.00	59.74	-95.26	-35.52	-13	22.52
10 812.20	37.73	H	38.02	-30.77	44.98	-95.26	-50.28	-13	37.28
10 932.70	38.51	H	38.17	-30.14	46.54	-95.26	-48.72	-13	35.72
Above 11 000.00	Not detected	–	–	–	–	–	–	–	–

ULCA_66B

Frequency (㎒)	Measured Level (dBμV)	Ant. Pol.	AF (dB/m)	AMP+CL (dB)	E (dBμV/m)	CF (dB)	E.I.R.P. (dB m)	Limit (dB m)	Margin (dB)
PCC 10 ㎒ + SCC 10 ㎒_ Middle Channel (1 750.1 ㎒ + 1 760 ㎒)									
3 509.50	57.59	H	31.08	-36.72	51.95	-95.26	-43.31	-13	30.31
3 508.60	53.53	V	31.08	-36.72	47.89	-95.26	-47.37	-13	34.37
4 999.70	44.25	V	33.00	-35.26	41.99	-95.26	-53.27	-13	40.27
5 077.00	48.82	V	33.11	-35.34	46.59	-95.26	-48.67	-13	35.67
5 265.00	56.52	H	33.66	-34.99	55.19	-95.26	-40.07	-13	27.07
5 264.50	61.08	V	33.66	-35.00	59.74	-95.26	-35.52	-13	22.52
5 602.00	45.97	V	33.90	-33.80	46.07	-95.26	-49.19	-13	36.19
6 274.70	44.24	H	34.70	-32.95	45.99	-95.26	-49.27	-13	36.27
7 018.60	48.76	H	35.50	-33.13	51.13	-95.26	-44.13	-13	31.13
7 017.70	51.52	V	35.50	-33.13	53.89	-95.26	-41.37	-13	28.37
8 774.50	61.52	H	37.05	-33.40	65.17	-95.26	-30.09	-13	17.09
8 773.10	66.38	V	37.05	-33.42	70.01	-95.26	-25.25	-13	12.25
10 527.20	43.39	H	37.70	-30.98	50.11	-95.26	-45.15	-13	32.15
10 530.00	53.41	V	37.70	-30.99	60.12	-95.26	-35.14	-13	22.14
Above 10 600.00	Not detected	–	–	–	–	–	–	–	–

ULCA_66B

Frequency (㎒)	Measured Level (dBμV)	Ant. Pol.	AF (dB/m)	AMP+CL (dB)	E (dBμV/m)	CF (dB)	E.I.R.P. (dB m)	Limit (dB m)	Margin (dB)
PCC 10 ㎒ + SCC 10 ㎒_ High Channel (1 765.1 ㎒ + 1 775 ㎒)									
3 538.60	57.62	H	31.02	-36.92	51.72	-95.26	-43.54	-13	30.54
3 538.60	53.66	V	31.02	-36.92	47.76	-95.26	-47.50	-13	34.50
4 999.70	43.47	V	33.00	-35.26	41.21	-95.26	-54.05	-13	41.05
5 309.10	53.87	H	33.82	-34.75	52.94	-95.26	-42.32	-13	29.32
5 310.00	60.82	V	33.82	-34.74	59.90	-95.26	-35.36	-13	22.36
5 421.10	47.83	V	33.90	-34.43	47.30	-95.26	-47.97	-13	34.97
7 078.60	50.87	H	35.56	-33.10	53.33	-95.26	-41.93	-13	28.93
7 077.70	60.59	V	35.56	-33.10	63.05	-95.26	-32.21	-13	19.21
8 848.10	61.11	H	37.20	-32.99	65.32	-95.26	-29.94	-13	16.94
8 848.60	67.21	V	37.20	-32.99	71.42	-95.26	-23.84	-13	10.84
10 620.00	43.15	H	37.80	-30.99	49.96	-95.26	-45.30	-13	32.30
10 620.00	50.53	V	37.80	-30.99	57.34	-95.26	-37.92	-13	24.92
12 213.80	37.30	H	38.40	-29.51	46.19	-95.26	-49.07	-13	36.07
Above 12 300.00	Not detected	–	–	–	–	–	–	–	–

ULCA_66C

Frequency (㎒)	Measured Level (dBμV)	Ant. Pol.	AF (dB/m)	AMP+CL (dB)	E (dBμV/m)	CF (dB)	E.I.R.P. (dB m)	Limit (dB m)	Margin (dB)
PCC 20 ㎒ + SCC 20 ㎒_Low Channel (1 720 ㎒ + 1 739.8 ㎒)									
3 460.30	56.98	H	31.10	-36.76	51.32	-95.26	-43.94	-13	30.94
3 459.80	53.00	V	31.10	-36.76	47.34	-95.26	-47.92	-13	34.92
5 000.20	45.21	V	33.00	-35.26	42.95	-95.26	-52.31	-13	39.31
5 188.60	57.25	H	33.45	-35.23	55.47	-95.26	-39.79	-13	26.79
5 188.60	58.06	V	33.45	-35.23	56.28	-95.26	-38.98	-13	25.98
6 917.80	45.51	H	35.34	-33.45	47.40	-95.26	-47.86	-13	34.86
6 917.80	51.57	V	35.34	-33.45	53.46	-95.26	-41.81	-13	28.81
8 646.60	57.15	H	36.69	-34.01	59.83	-95.26	-35.43	-13	22.43
8 650.80	67.44	V	36.70	-34.04	70.10	-95.26	-25.16	-13	12.16
10 377.70	42.37	H	37.80	-30.83	49.34	-95.26	-45.92	-13	32.92
10 380.00	53.76	V	37.80	-30.84	60.72	-95.26	-34.54	-13	21.54
Above 10 400.00	Not detected	–	–	–	–	–	–	–	–
PCC 20 ㎒ + SCC 20 ㎒_ Middle Channel (1 745.1 ㎒ + 1 764.9 ㎒)									
3 178.10	53.81	H	30.16	-36.76	47.21	-95.26	-48.05	-13	35.05
3 291.60	47.02	V	30.65	-37.11	40.56	-95.26	-54.70	-13	41.70
3 508.10	57.33	H	31.08	-36.71	51.70	-95.26	-43.56	-13	30.56
3 508.10	54.98	V	31.08	-36.71	49.35	-95.26	-45.91	-13	32.91
5 000.20	45.34	V	33.00	-35.26	43.08	-95.26	-52.18	-13	39.18
5 264.10	56.09	H	33.66	-35.00	54.75	-95.26	-40.51	-13	27.51
5 264.10	62.56	V	33.66	-35.00	61.22	-95.26	-34.04	-13	21.04
5 464.70	53.46	V	33.90	-34.27	53.09	-95.26	-42.17	-13	29.17
6 748.10	44.52	V	35.20	-33.29	46.43	-95.26	-48.83	-13	35.83
7 016.30	46.41	H	35.50	-33.12	48.79	-95.26	-46.47	-13	33.47
7 016.30	53.39	V	35.50	-33.12	55.77	-95.26	-39.49	-13	26.49
8 771.70	62.04	H	37.04	-33.44	65.64	-95.26	-29.63	-13	16.63
8 772.20	69.36	V	37.04	-33.43	72.97	-95.26	**-22.29**	-13	9.29
9 978.30	44.24	V	37.80	-32.17	49.87	-95.26	-45.39	-13	32.39
10 528.10	43.86	H	37.70	-30.98	50.58	-95.26	-44.69	-13	31.69
10 528.10	53.00	V	37.70	-30.98	59.72	-95.26	-35.54	-13	22.54
Above 10 600.00	Not detected	–	–	–	–	–	–	–	–

ULCA_66C

Frequency (㎒)	Measured Level (dBμV)	Ant. Pol.	AF (dB/m)	AMP+CL (dB)	E (dBμV/m)	CF (dB)	E.I.R.P. (dB m)	Limit (dB m)	Margin (dB)
PCC 20 ㎒ + SCC 20 ㎒_ High Channel (1 750.2 ㎒ + 1 770 ㎒)									
3 206.70	50.48	H	30.23	-36.96	43.75	-95.26	-51.51	-13	38.51
3 309.40	49.77	H	30.68	-37.08	43.37	-95.26	-51.89	-13	38.89
3 520.30	58.68	H	31.06	-36.80	52.94	-95.26	-42.32	-13	29.32
3 518.40	56.21	V	31.06	-36.79	50.48	-95.26	-44.78	-13	31.78
4 361.30	44.58	V	32.02	-35.87	40.73	-95.26	-54.53	-13	41.53
4 844.10	50.70	H	32.78	-35.66	47.82	-95.26	-47.44	-13	34.44
4 999.70	45.34	V	33.00	-35.26	43.08	-95.26	-52.18	-13	39.18
5 226.60	56.21	H	33.55	-35.10	54.66	-95.26	-40.60	-13	27.60
5 279.50	54.49	H	33.72	-34.90	53.31	-95.26	-41.95	-13	28.95
5 279.50	60.73	V	33.72	-34.90	59.55	-95.26	-35.71	-13	22.71
6 420.50	48.33	H	34.60	-33.53	49.40	-95.26	-45.86	-13	32.86
7 038.30	49.69	H	35.50	-33.12	52.07	-95.26	-43.19	-13	30.19
7 038.30	55.62	V	35.50	-33.12	58.00	-95.26	-37.26	-13	24.26
8 797.50	62.36	H	37.10	-33.14	66.32	-95.26	-28.94	-13	15.94
8 798.00	67.45	V	37.10	-33.13	71.42	-95.26	-23.84	-13	10.84
9 420.50	42.67	H	37.64	-32.00	48.31	-95.26	-46.95	-13	33.95
10 555.30	44.62	H	37.71	-30.97	51.36	-95.26	-43.90	-13	30.90
10 560.50	50.25	V	37.72	-30.92	57.05	-95.26	-38.21	-13	25.21
Above 10 600.00	Not detected	–	–	–	–	–	–	–	–

ANT 2
ULCA_5B

Frequency (㎒)	Measured Level (dBμV)	Ant. Pol.	AF (dB/m)	AMP+CL (dB)	E (dBμV/m)	CF (dB)	E.R.P. (dB m)	Limit (dB m)	Margin (dB)
PCC 10 ㎒ + SCC 10 ㎒_Low Channel (829 ㎒ + 838.9 ㎒)									
1 666.84	59.53	H	25.80	-38.67	46.66	-97.41	-50.75	-13	37.75
1 667.13	58.78	V	25.81	-38.67	45.92	-97.41	-51.49	-13	38.49
1 874.13	48.92	H	27.45	-38.02	38.35	-97.41	-59.06	-13	46.06
2 501.03	65.60	H	28.11	-37.20	56.51	-97.41	**-40.90**	-13	27.90
2 501.31	63.59	V	28.11	-37.19	54.51	-97.41	-42.90	-13	29.90
3 335.22	52.60	H	30.63	-37.02	46.21	-97.41	-51.20	-13	38.20
3 334.94	53.43	V	30.63	-37.01	47.05	-97.41	-50.36	-13	37.36
4 168.28	51.85	H	31.96	-36.21	47.60	-97.41	-49.81	-13	36.81
4 168.00	51.41	V	31.96	-36.21	47.16	-97.41	-50.25	-13	37.25
4 999.94	43.32	H	33.00	-35.26	41.06	-97.41	-56.35	-13	43.35
5 000.22	44.18	V	33.00	-35.26	41.92	-97.41	-55.49	-13	42.49
9 174.53	41.84	V	37.05	-32.82	46.07	-97.41	-51.34	-13	38.34
Above 9 200.00	Not detected	–	–	–	–	–	–	–	–
PCC 10 ㎒ + SCC 10 ㎒_ Middle Channel (831.6 ㎒ + 841.5 ㎒)									
1 672.19	57.55	H	25.87	-38.66	44.76	-97.41	-52.65	-13	39.65
1 672.47	59.57	V	25.87	-38.66	46.78	-97.41	-50.63	-13	37.63
1 874.97	48.05	H	27.45	-38.01	37.49	-97.41	-59.92	-13	46.92
2 509.19	62.22	H	28.16	-37.08	53.30	-97.41	-44.11	-13	31.11
2 509.19	60.66	V	28.16	-37.08	51.74	-97.41	-45.67	-13	32.67
3 343.94	48.89	H	30.61	-36.99	42.51	-97.41	-54.90	-13	41.90
3 345.34	51.11	V	30.61	-36.99	44.73	-97.41	-52.68	-13	39.68
4 181.50	49.19	H	31.94	-36.25	44.88	-97.41	-52.53	-13	39.53
4 181.50	47.41	V	31.94	-36.25	43.10	-97.41	-54.31	-13	41.31
5 000.22	43.85	H	33.00	-35.26	41.59	-97.41	-55.82	-13	42.82
4 999.94	45.52	V	33.00	-35.26	43.26	-97.41	-54.15	-13	41.15
Above 5 100.00	Not detected	–	–	–	–	–	–	–	–

ULCA_5B

Frequency (㎒)	Measured Level (dBμV)	Ant. Pol.	AF (dB/m)	AMP+CL (dB)	E (dBμV/m)	CF (dB)	E.R.P. (dB m)	Limit (dB m)	Margin (dB)
PCC 10 ㎒ + SCC 10 ㎒_ High Channel (834.1 ㎒ + 844.0 ㎒)									
1 625.38	55.48	V	25.55	-38.61	42.42	-97.41	-54.99	-13	41.99
1 626.41	47.57	H	25.55	-38.61	34.51	-97.41	-62.90	-13	49.90
1 677.25	60.01	H	25.93	-38.67	47.27	-97.41	-50.14	-13	37.14
1 677.53	60.48	V	25.93	-38.67	47.74	-97.41	-49.67	-13	36.67
1 876.66	48.87	H	27.45	-38.01	38.31	-97.41	-59.11	-13	46.11
2 516.50	58.57	H	28.20	-36.97	49.80	-97.41	-47.61	-13	34.61
2 517.63	56.86	V	28.21	-36.96	48.11	-97.41	-49.30	-13	36.30
3 025.56	45.71	V	29.90	-36.90	38.71	-97.41	-58.70	-13	45.70
3 355.19	50.89	H	30.61	-36.98	44.52	-97.41	-52.89	-13	39.89
3 356.59	51.39	V	30.61	-36.98	45.02	-97.41	-52.39	-13	39.39
4 193.88	47.74	H	31.91	-36.25	43.40	-97.41	-54.01	-13	41.01
4 196.13	47.31	V	31.91	-36.26	42.96	-97.41	-54.45	-13	41.45
4 999.94	44.69	H	33.00	-35.26	42.43	-97.41	-54.98	-13	41.98
5 000.22	46.28	V	33.00	-35.26	44.02	-97.41	-53.39	-13	40.39
8 110.00	40.98	V	36.22	-33.92	43.28	-97.41	-54.13	-13	41.13
Above 8 200.00	Not detected	–	–	–	–	–	–	–	–

ULCA_7C

Frequency (㎒)	Measured Level (dBμV)	Ant. Pol.	AF (dB/m)	AMP+CL (dB)	E (dBμV/m)	CF (dB)	E.I.R.P. (dB m)	Limit (dB m)	Margin (dB)
PCC 20 ㎒ + SCC 20 ㎒_Low Channel (2 510 ㎒ + 2 529.8 ㎒)									
4 999.70	41.59	H	34.80	-35.26	41.13	-95.26	-54.13	-25	29.13
4 999.70	43.72	V	34.80	-35.26	43.26	-95.26	-52.00	-25	27.00
5 037.70	48.51	H	34.72	-35.22	48.01	-95.26	-47.25	-25	22.25
5 037.70	48.93	V	34.72	-35.22	48.43	-95.26	-46.83	-25	21.83
7 558.60	48.16	H	36.52	-32.70	51.98	-95.26	-43.28	-25	18.28
7 558.60	52.38	V	36.52	-32.70	56.20	-95.26	-39.06	-25	14.06
10 077.20	44.42	H	37.80	-31.52	50.70	-95.26	-44.56	-25	19.56
10 079.10	50.27	V	37.80	-31.52	56.55	-95.26	**-38.71**	-25	13.71
12 596.30	36.32	H	39.29	-29.42	46.19	-95.26	-49.07	-25	24.07
Above 12 600.00	Not detected	–	–	–	–	–	–	–	–
PCC 20 ㎒ + SCC 20 ㎒_ Middle Channel (2 525.1 ㎒ + 2 544.9 ㎒)									
3 234.40	46.40	V	32.17	-36.97	41.60	-95.26	-53.66	-25	28.66
4 999.70	42.71	V	34.80	-35.26	42.25	-95.26	-53.01	-25	28.01
5 067.70	41.55	H	34.66	-35.28	40.93	-95.26	-54.33	-25	29.33
5 067.70	43.38	V	34.66	-35.28	42.76	-95.26	-52.50	-25	27.50
7 603.60	49.39	H	36.60	-32.62	53.37	-95.26	-41.89	-25	16.89
7 603.60	50.45	V	36.60	-32.62	54.43	-95.26	-40.83	-25	15.83
10 137.70	44.76	H	37.72	-31.61	50.87	-95.26	-44.39	-25	19.39
10 137.70	51.38	V	37.72	-31.61	57.49	-95.26	-37.77	-25	12.77
Above 10 200.00	Not detected	–	–	–	–	–	–	–	–
PCC 20 ㎒ + SCC 20 ㎒_ High Channel (2 540.2 ㎒ + 2 560 ㎒)									
4 999.70	42.71	V	34.80	-35.26	42.25	-95.26	-53.01	-25	28.01
5 098.10	42.06	H	34.60	-35.41	41.25	-95.26	-54.01	-25	29.01
5 099.50	43.65	V	34.60	-35.42	42.83	-95.26	-52.43	-25	27.43
7 647.20	44.90	H	36.60	-32.43	49.07	-95.26	-46.19	-25	21.19
7 647.20	51.21	V	36.60	-32.43	55.38	-95.26	-39.88	-25	14.88
10 200.50	39.30	H	37.70	-31.59	45.41	-95.26	-49.85	-25	24.85
10 197.70	41.75	V	37.70	-31.60	47.85	-95.26	-47.41	-25	22.41
Above 10 300.00	Not detected	–	–	–	–	–	–	–	–

ULCA_66B

Frequency (㎒)	Measured Level (dBμV)	Ant. Pol.	AF (dB/m)	AMP+CL (dB)	E (dBμV/m)	CF (dB)	E.I.R.P. (dB m)	Limit (dB m)	Margin (dB)
PCC 10 ㎒ + SCC 10 ㎒_Low Channel (1 715 ㎒ + 1 724.9 ㎒)									
3 440.20	51.85	H	31.02	-36.81	46.06	-95.26	-49.21	-13	36.21
3 439.70	52.47	V	31.02	-36.81	46.68	-95.26	-48.58	-13	35.58
4 621.90	46.54	V	31.94	-36.35	42.13	-95.26	-53.13	-13	40.13
5 000.20	45.11	V	33.00	-35.26	42.85	-95.26	-52.41	-13	39.41
5 160.00	60.33	H	33.34	-35.42	58.25	-95.26	-37.01	-13	24.01
5 159.10	62.25	V	33.34	-35.42	60.17	-95.26	-35.09	-13	22.09
6 878.90	63.68	H	35.30	-33.68	65.30	-95.26	-29.96	-13	16.96
6 878.00	58.35	V	35.30	-33.69	59.96	-95.26	-35.30	-13	22.30
8 598.30	64.55	H	36.60	-33.72	67.43	-95.26	-27.83	-13	14.83
8 598.30	65.54	V	36.60	-33.72	68.42	-95.26	-26.84	-13	13.84
10 239.80	46.13	V	37.82	-31.32	52.63	-95.26	-42.63	-13	29.63
10 355.20	44.37	V	37.80	-30.64	51.53	-95.26	-43.73	-13	30.73
10 510.80	45.50	V	37.70	-31.05	52.15	-95.26	-43.11	-13	30.11
12 038.40	40.21	H	38.50	-30.93	47.78	-95.26	-47.48	-13	34.48
12 953.90	40.26	V	39.00	-29.21	50.05	-95.26	-45.21	-13	32.21
Above 13 000.00	Not detected	–	–	–	–	–	–	–	–
PCC 10 ㎒ + SCC 10 ㎒_ Middle Channel (1 750.1 ㎒ + 1 760 ㎒)									
3 510.50	50.75	H	31.08	-36.74	45.09	-95.26	-50.17	-13	37.17
3 510.00	53.34	V	31.08	-36.73	47.69	-95.26	-47.57	-13	34.57
5 000.20	45.45	V	33.00	-35.26	43.19	-95.26	-52.07	-13	39.07
5 264.10	62.50	H	33.66	-35.00	61.16	-95.26	-34.10	-13	21.10
5 264.50	63.31	V	33.66	-35.00	61.97	-95.26	-33.29	-13	20.29
7 019.10	45.50	H	35.50	-33.13	47.87	-95.26	-47.39	-13	34.39
7 019.50	55.13	V	35.50	-33.14	57.49	-95.26	-37.77	-13	24.77
8 774.10	62.93	H	37.05	-33.40	66.58	-95.26	-28.69	-13	15.69
8 774.50	65.79	V	37.05	-33.40	69.44	-95.26	**-25.82**	-13	12.82
10 529.50	42.10	V	37.70	-30.99	48.81	-95.26	-46.45	-13	33.45
11 005.80	39.89	H	38.20	-30.13	47.96	-95.26	-47.30	-13	34.30
Above 11 100.00	Not detected	–	–	–	–	–	–	–	–

ULCA_66B

Frequency (㎒)	Measured Level (dBμV)	Ant. Pol.	AF (dB/m)	AMP+CL (dB)	E (dBμV/m)	CF (dB)	E.I.R.P. (dB m)	Limit (dB m)	Margin (dB)
PCC 10 ㎒ + SCC 10 ㎒_ High Channel (1 765.1 ㎒ + 1 775 ㎒)									
3 539.10	51.36	H	31.02	-36.92	45.46	-95.26	-49.80	-13	36.80
3 539.10	47.99	V	31.02	-36.92	42.09	-95.26	-53.17	-13	40.17
4 197.20	47.42	V	31.91	-36.26	43.07	-95.26	-52.19	-13	39.19
4 999.70	44.57	V	33.00	-35.26	42.31	-95.26	-52.95	-13	39.95
5 309.10	60.36	H	33.82	-34.75	59.43	-95.26	-35.83	-13	22.83
5 309.50	65.46	V	33.82	-34.74	64.54	-95.26	-30.72	-13	17.72
5 461.40	52.21	V	33.90	-34.28	51.83	-95.26	-43.44	-13	30.44
5 608.10	56.80	V	33.90	-33.73	56.97	-95.26	-38.29	-13	25.29
6 000.50	43.80	V	34.60	-33.03	45.37	-95.26	-49.90	-13	36.90
7 079.10	55.45	H	35.56	-33.10	57.91	-95.26	-37.35	-13	24.35
7 079.50	58.035	V	35.56	-33.10	60.50	-95.26	-34.77	-13	21.77
8 849.50	59.92	H	37.20	-32.99	64.13	-95.26	-31.13	-13	18.13
8 849.50	64.73	V	37.20	-32.99	68.94	-95.26	-26.32	-13	13.32
10 468.10	44.14	H	37.76	-31.38	50.52	-95.26	-44.74	-13	31.74
10 620.90	42.66	H	37.80	-31.00	49.46	-95.26	-45.80	-13	32.80
10 620.50	47.75	V	37.80	-30.99	54.56	-95.26	-40.70	-13	27.70
12 389.50	41.37	H	38.40	-27.90	51.87	-95.26	-43.39	-13	30.39
12 388.60	40.65	V	38.40	-27.92	51.13	-95.26	-44.13	-13	31.13
Above 12 400.00	Not detected	–	–	–	–	–	–	–	–

ULCA_66C

Frequency (㎒)	Measured Level (dBμV)	Ant. Pol.	AF (dB/m)	AMP+CL (dB)	E (dBμV/m)	CF (dB)	E.I.R.P. (dB m)	Limit (dB m)	Margin (dB)
PCC 20 ㎒ + SCC 20 ㎒_Low Channel (1 720 ㎒ + 1 739.8 ㎒)									
3 458.00	47.04	H	31.10	-36.76	41.38	-95.26	-53.88	-13	40.88
3 457.50	46.81	V	31.10	-36.76	41.15	-95.26	-54.11	-13	41.11
4 441.40	46.74	H	32.02	-35.88	42.88	-95.26	-52.38	-13	39.38
4 393.10	45.65	V	32.09	-36.10	41.64	-95.26	-53.62	-13	40.62
4 500.90	55.17	V	31.90	-35.70	51.37	-95.26	-43.89	-13	30.89
4 778.40	44.16	V	32.51	-35.69	40.98	-95.26	-54.28	-13	41.28
5 000.20	45.65	V	33.00	-35.26	43.39	-95.26	-51.88	-13	38.88
5 073.80	44.76	V	33.10	-35.32	42.54	-95.26	-52.72	-13	39.72
5 188.60	64.15	H	33.45	-35.23	62.37	-95.26	-32.89	-13	19.89
5 189.10	62.84	V	33.46	-35.23	61.07	-95.26	-34.19	-13	21.19
6 549.80	43.24	V	34.70	-33.47	44.47	-95.26	-50.80	-13	37.80
6 917.80	48.92	H	35.34	-33.45	50.81	-95.26	-44.45	-13	31.45
6 917.80	55.99	V	35.34	-33.45	57.88	-95.26	-37.38	-13	24.38
7 322.30	51.23	V	36.04	-32.50	54.77	-95.26	-40.49	-13	27.49
8 646.60	65.22	H	36.69	-34.01	67.90	-95.26	-27.36	-13	14.36
8 646.60	64.57	V	36.69	-34.01	67.25	-95.26	-28.01	-13	15.01
9 833.40	40.26	H	37.67	-32.49	45.44	-95.26	-49.82	-13	36.82
10 375.30	41.26	H	37.80	-30.81	48.25	-95.26	-47.01	-13	34.01
10 375.30	45.66	V	37.80	-30.81	52.65	-95.26	-42.62	-13	29.62
Above 10 400.00	Not detected	–	–	–	–	–	–	–	–

ULCA_66C

Frequency (㎒)	Measured Level (dBμV)	Ant. Pol.	AF (dB/m)	AMP+CL (dB)	E (dBμV/m)	CF (dB)	E.I.R.P. (dB m)	Limit (dB m)	Margin (dB)
PCC 20 ㎒ + SCC 20 ㎒_ Middle Channel (1 745.1 ㎒ + 1 764.9 ㎒)									
3 510.50	50.93	H	31.08	-36.74	45.27	-95.26	-49.99	-13	36.99
3 510.00	52.54	V	31.08	-36.73	46.89	-95.26	-48.37	-13	35.37
4 190.20	44.06	H	31.92	-36.25	39.73	-95.26	-55.53	-13	42.53
5 000.20	47.44	V	33.00	-35.26	45.18	-95.26	-50.08	-13	37.08
5 264.10	57.87	H	33.66	-35.00	56.53	-95.26	-38.73	-13	25.73
5 264.10	63.02	V	33.66	-35.00	61.68	-95.26	-33.58	-13	20.58
5 474.50	50.70	H	33.90	-34.22	50.38	-95.26	-44.88	-13	31.88
7 016.30	45.24	H	35.50	-33.12	47.62	-95.26	-47.64	-13	34.64
7 018.10	52.77	V	35.50	-33.13	55.14	-95.26	-40.12	-13	27.12
8 772.20	60.65	H	37.04	-33.43	64.26	-95.26	-31.00	-13	18.00
8 772.20	66.84	V	37.04	-33.43	70.45	-95.26	**-24.81**	-13	11.81
10 582.10	45.32	V	37.76	-30.79	52.29	-95.26	-42.97	-13	29.97
12 282.20	39.51	V	38.40	-30.41	47.50	-95.26	-47.76	-13	34.76
Above 12 300.00	Not detected	–	–	–	–	–	–	–	–
PCC 20 ㎒ + SCC 20 ㎒_ High Channel (1 750.2 ㎒ + 1 770 ㎒)									
3 520.30	52.50	H	31.06	-36.80	46.76	-95.26	-48.50	-13	35.50
3 518.40	51.93	V	31.06	-36.79	46.20	-95.26	-49.06	-13	36.06
4 776.10	43.47	V	32.50	-35.70	40.27	-95.26	-54.99	-13	41.99
5 000.20	44.97	V	33.00	-35.26	42.71	-95.26	-52.55	-13	39.55
5 279.50	53.02	H	33.72	-34.90	51.84	-95.26	-43.42	-13	30.42
5 277.20	60.23	V	33.71	-34.91	59.03	-95.26	-36.23	-13	23.23
6 289.20	43.42	V	34.70	-32.93	45.19	-95.26	-50.07	-13	37.07
7 038.30	47.40	H	35.50	-33.12	49.78	-95.26	-45.48	-13	32.48
7 038.30	55.86	V	35.50	-33.12	58.24	-95.26	-37.02	-13	24.02
8 801.70	60.29	H	37.10	-33.10	64.29	-95.26	-30.97	-13	17.97
8 797.50	66.05	V	37.10	-33.14	70.01	-95.26	-25.25	-13	12.25
10 559.10	42.93	V	37.72	-30.93	49.72	-95.26	-45.54	-13	32.54
Above 10 600.00	Not detected	–	–	–	–	–	–	–	–

Remark;

1. AF = Antenna Factor, CL = Cable Loss, CF = Conversion Factor.
2. E (dBμV/m) = Measured Level (dBμV) + Antenna Factor (dB/m) + AMP (dB) + Cable Loss (dB).
3. E.I.R.P. (dB m) = E (dBμV/m) + CF (dB).
4. E.R.P. (dB m) = E (dBμV/m) + CF (dB) - 2.15 (dB); where E.R.P. and E.I.R.P. are expressed in consistent units.
5. CF (dB) = 20 log D - 104.8; where D is the measurement distance in meters, According to KDB 971168 D01 v03r01 5.8.4.
6. The frequency spectrum is examined from 9 kHz to the 10th harmonic of the fundamental frequency of the transmitter. No other spurious and harmonic emissions were reported greater than listed emissions above table.

3. Conducted Output Power

3.1. Limit

CFR 47, Section FCC §2.1046 and IC RSS-Gen Issue 5 6.12.

3.2. Test Procedure

Output power shall be measured at the RF output terminals for all configurations.

1. The RF output of the transmitter was connected to the input of the mobile test unit in order to establish communication with the EUT.
2. The EUT was set up for the max. output power with pseudo random data modulation by using mobile test unit parameters.
3. The measurement performed using a wideband RF power meter.
4. This EUT was tested under all configurations and the highest power was investigated and reported.

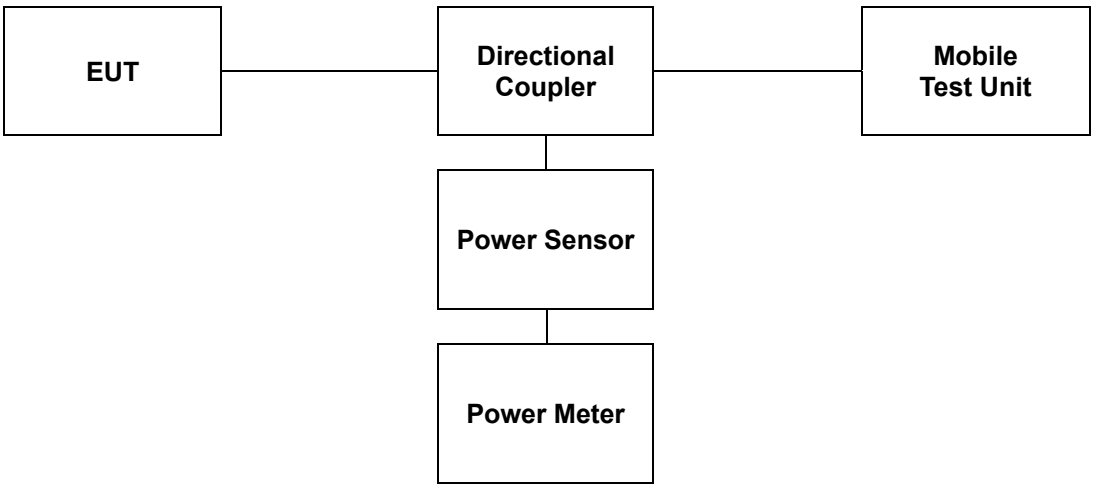

3.3. Test Result

Ambient temperature : (23 ± 1) ℃
Relative humidity : 47 % R.H.

ULCA 5B												
Ch.	PCC					SCC					Power	
	BW [MHz]	Freq. [MHz]	Ch.	RB	RB Offset	BW [MHz]	Freq. [MHz]	Ch.	RB	RB Offset	(dB m)	(W)
Low	3	825.6	20416	1	14	5	825.6	20455	1	0	22.15	0.164
	5	826.5	20425	1	24	3	830.4	20464	1	0	22.17	0.165
	5	826.8	20428	1	24	10	834.0	20500	1	0	24.22	0.264
	10	829.0	20450	1	49	5	836.2	20522	1	0	24.23	0.265
	10	829.0	20450	1	49	10	838.9	20549	1	0	**24.29**	**0.269**
Middle	3	834.1	20501	1	14	5	838.0	20540	1	0	22.16	0.164
	5	835.0	20510	1	24	3	838.9	20549	1	0	22.08	0.161
	5	831.8	20478	1	24	10	839.0	20550	1	0	24.16	0.261
	10	834.0	20500	1	49	5	841.2	20572	1	0	22.27	0.169
	10	831.6	20476	1	49	10	841.5	20575	1	0	24.25	0.266
High	3	842.6	20586	1	14	5	846.5	20625	1	0	22.18	0.165
	5	843.5	20595	1	24	3	847.4	20634	1	0	22.14	0.164
	5	836.8	20528	1	24	10	844.0	20600	1	0	24.18	0.262
	10	839.0	20550	1	49	5	846.2	20622	1	0	24.25	0.266
	10	834.1	20501	1	49	10	844.0	20600	1	0	24.28	0.268

Note;

QPSK Modulation with 1 RB

ULCA 5B												
Ch.	PCC					SCC					Power	
	BW [MHz]	Freq. [MHz]	Ch.	RB	RB Offset	BW [MHz]	Freq. [MHz]	Ch.	RB	RB Offset	(dB m)	(W)
Low	3	825.6	20416	1	14	5	825.6	20455	1	0	21.60	0.145
	5	826.5	20425	1	24	3	830.4	20464	1	0	21.85	0.153
	5	826.8	20428	1	24	10	834.0	20500	1	0	23.49	0.223
	10	829.0	20450	1	49	5	836.2	20522	1	0	23.44	0.221
	10	829.0	20450	1	49	10	838.9	20549	1	0	**23.65**	**0.232**
Middle	3	834.1	20501	1	14	5	838.0	20540	1	0	21.58	0.144
	5	835.0	20510	1	24	3	838.9	20549	1	0	21.69	0.148
	5	831.8	20478	1	24	10	839.0	20550	1	0	23.51	0.224
	10	834.0	20500	1	49	5	841.2	20572	1	0	23.58	0.228
	10	831.6	20476	1	49	10	841.5	20575	1	0	23.62	0.230
High	3	842.6	20586	1	14	5	846.5	20625	1	0	21.62	0.145
	5	843.5	20595	1	24	3	847.4	20634	1	0	21.59	0.144
	5	836.8	20528	1	24	10	844.0	20600	1	0	23.45	0.221
	10	839.0	20550	1	49	5	846.2	20622	1	0	23.60	0.229
	10	834.1	20501	1	49	10	844.0	20600	1	0	23.62	0.230

Note;

16QAM Modulation with 1 RB

ULCA 5B												
Ch.	PCC					SCC					Power	
	BW [MHz]	Freq. [MHz]	Ch.	RB	RB Offset	BW [MHz]	Freq. [MHz]	Ch.	RB	RB Offset	(dBm)	(W)
Low	3	825.6	20416	15	0	5	825.6	20455	25	0	22.20	0.166
	5	826.5	20425	25	0	3	830.4	20464	15	0	22.15	0.164
	5	826.8	20428	25	0	10	834.0	20500	50	0	22.12	0.163
	10	829.0	20450	50	0	5	836.2	20522	25	0	22.09	0.162
	10	829.0	20450	50	0	10	838.9	20549	50	0	**22.28**	**0.169**
Middle	3	834.1	20501	15	0	5	838.0	20540	25	0	22.19	0.166
	5	835.0	20510	25	0	3	838.9	20549	15	0	22.20	0.166
	5	831.8	20478	25	0	10	839.0	20550	50	0	22.20	0.166
	10	834.0	20500	50	0	5	841.2	20572	25	0	22.12	0.163
	10	831.6	20476	50	0	10	841.5	20575	50	0	22.23	0.167
High	3	842.6	20586	15	0	5	846.5	20625	25	0	22.15	0.164
	5	843.5	20595	25	0	3	847.4	20634	15	0	22.14	0.164
	5	836.8	20528	25	0	10	844.0	20600	50	0	22.17	0.165
	10	839.0	20550	50	0	5	846.2	20622	25	0	22.09	0.162
	10	834.1	20501	50	0	10	844.0	20600	50	0	22.20	0.166

Note;

QPSK Modulation with Full RB

ULCA 5B												
Ch.	PCC					SCC					Power	
	BW [MHz]	Freq. [MHz]	Ch.	RB	RB Offset	BW [MHz]	Freq. [MHz]	Ch.	RB	RB Offset	(dBm)	(W)
Low	3	825.6	20416	15	0	5	825.6	20455	25	0	21.24	0.133
	5	826.5	20425	25	0	3	830.4	20464	15	0	21.17	0.131
	5	826.8	20428	25	0	10	834.0	20500	50	0	21.25	0.133
	10	829.0	20450	50	0	5	836.2	20522	25	0	21.22	0.132
	10	829.0	20450	50	0	10	838.9	20549	50	0	21.26	0.134
Middle	3	834.1	20501	15	0	5	838.0	20540	25	0	21.22	0.132
	5	835.0	20510	25	0	3	838.9	20549	15	0	21.19	0.132
	5	831.8	20478	25	0	10	839.0	20550	50	0	21.21	0.132
	10	834.0	20500	50	0	5	841.2	20572	25	0	21.20	0.132
	10	831.6	20476	50	0	10	841.5	20575	50	0	21.22	0.132
High	3	842.6	20586	15	0	5	846.5	20625	25	0	21.20	0.132
	5	843.5	20595	25	0	3	847.4	20634	15	0	21.18	0.131
	5	836.8	20528	25	0	10	844.0	20600	50	0	21.23	0.133
	10	839.0	20550	50	0	5	846.2	20622	25	0	21.21	0.132
	10	834.1	20501	50	0	10	844.0	20600	50	0	**21.28**	**0.134**

Note;

16QAM Modulation with Full RB

ULCA 7C												
Ch.	PCC					SCC					Power	
	BW [MHz]	Freq. [MHz]	Ch.	RB	RB Offset	BW [MHz]	Freq. [MHz]	Ch.	RB	RB Offset	(dB m)	(W)
Low	10	2 505.5	20805	1	49	20	2 519.9	20949	1	0	24.20	0.263
	20	2 510.0	20850	1	99	10	2 524.4	20994	1	0	24.18	0.262
	15	2 507.5	20825	1	74	10	2 519.5	20945	1	0	24.17	0.261
	15	2 507.5	20825	1	74	15	2 522.5	20975	1	0	24.21	0.264
	15	2 507.8	20828	1	74	20	2 524.9	20999	1	0	24.22	0.264
	20	2 510.0	20850	1	99	15	2 527.1	21021	1	0	24.28	0.268
	20	2 510.0	20850	1	99	20	2 529.8	21048	1	0	**24.32**	**0.270**
Middle	10	2 525.6	21006	1	49	20	2 540.0	21150	1	0	24.18	0.262
	20	2 530.1	21051	1	99	10	2 544.5	21195	1	0	24.11	0.258
	15	2 530.1	21051	1	74	10	2 542.1	21171	1	0	24.18	0.262
	15	2 527.5	21025	1	74	15	2 542.5	21175	1	0	24.22	0.264
	15	2 525.3	21003	1	74	20	2 542.4	21174	1	0	24.26	0.267
	20	2 527.6	21026	1	99	15	2 544.7	21197	1	0	24.19	0.262
	20	2 525.1	21001	1	99	20	2 544.9	21199	1	0	24.26	0.267
High	10	2 545.6	21206	1	49	20	2 560.0	21350	1	0	24.21	0.264
	20	2 550.1	21251	1	99	10	2 564.5	21395	1	0	24.15	0.260
	15	2 552.7	21277	1	74	10	2 564.7	21397	1	0	24.22	0.264
	15	2 547.5	21225	1	74	15	2 562.5	21375	1	0	24.18	0.262
	15	2 542.9	21179	1	74	20	2 560.0	21350	1	0	24.11	0.258
	20	2 545.1	21201	1	99	15	2 562.2	21372	1	0	24.26	0.267
	20	2 540.2	21152	1	99	20	2 560.0	21350	1	0	24.27	0.267

Note;

QPSK Modulation with 1 RB

ULCA 7C												
Ch.	PCC					SCC					Power	
	BW [MHz]	Freq. [MHz]	Ch.	RB	RB Offset	BW [MHz]	Freq. [MHz]	Ch.	RB	RB Offset	(dB m)	(W)
Low	10	2 505.5	20805	1	49	20	2 519.9	20949	1	0	23.42	0.220
	20	2 510.0	20850	1	99	10	2 524.4	20994	1	0	23.38	0.218
	15	2 507.5	20825	1	74	10	2 519.5	20945	1	0	23.40	0.219
	15	2 507.5	20825	1	74	15	2 522.5	20975	1	0	23.37	0.217
	15	2 507.8	20828	1	74	20	2 524.9	20999	1	0	23.39	0.218
	20	2 510.0	20850	1	99	15	2 527.1	21021	1	0	23.41	0.219
	20	2 510.0	20850	1	99	20	2 529.8	21048	1	0	**23.46**	**0.222**
Middle	10	2 525.6	21006	1	49	20	2 540.0	21150	1	0	23.38	0.218
	20	2 530.1	21051	1	99	10	2 544.5	21195	1	0	23.37	0.217
	15	2 530.1	21051	1	74	10	2 542.1	21171	1	0	23.41	0.219
	15	2 527.5	21025	1	74	15	2 542.5	21175	1	0	23.40	0.219
	15	2 525.3	21003	1	74	20	2 542.4	21174	1	0	23.40	0.219
	20	2 527.6	21026	1	99	15	2 544.7	21197	1	0	23.38	0.218
	20	2 525.1	21001	1	99	20	2 544.9	21199	1	0	23.41	0.219
High	10	2 545.6	21206	1	49	20	2 560.0	21350	1	0	23.29	0.213
	20	2 550.1	21251	1	99	10	2 564.5	21395	1	0	23.35	0.216
	15	2 552.7	21277	1	74	10	2 564.7	21397	1	0	23.40	0.219
	15	2 547.5	21225	1	74	15	2 562.5	21375	1	0	23.31	0.214
	15	2 542.9	21179	1	74	20	2 560.0	21350	1	0	23.35	0.216
	20	2 545.1	21201	1	99	15	2 562.2	21372	1	0	23.39	0.218
	20	2 540.2	21152	1	99	20	2 560.0	21350	1	0	23.41	0.219

Note;

16QAM Modulation with 1 RB

ULCA 7C												
Ch.	PCC					SCC					Power	
	BW [MHz]	Freq. [MHz]	Ch.	RB	RB Offset	BW [MHz]	Freq. [MHz]	Ch.	RB	RB Offset	(dB m)	(W)
Low	10	2 505.5	20805	50	0	20	2 519.9	20949	100	0	22.05	0.160
	20	2 510.0	20850	100	0	10	2 524.4	20994	50	0	21.98	0.158
	15	2 507.5	20825	75	0	10	2 519.5	20945	50	0	22.08	0.161
	15	2 507.5	20825	75	0	15	2 522.5	20975	75	0	22.02	0.159
	15	2 507.8	20828	75	0	20	2 524.9	20999	100	0	22.04	0.160
	20	2 510.0	20850	100	0	15	2 527.1	21021	75	0	22.03	0.160
	20	2 510.0	20850	100	0	20	2 529.8	21048	100	0	22.10	0.162
Middle	10	2 525.6	21006	50	0	20	2 540.0	21150	100	0	22.02	0.159
	20	2 530.1	21051	100	0	10	2 544.5	21195	50	0	22.10	0.162
	15	2 530.1	21051	75	0	10	2 542.1	21171	50	0	22.10	0.162
	15	2 527.5	21025	75	0	15	2 542.5	21175	75	0	22.10	0.162
	15	2 525.3	21003	75	0	20	2 542.4	21174	100	0	22.09	0.162
	20	2 527.6	21026	100	0	15	2 544.7	21197	75	0	22.03	0.160
	20	2 525.1	21001	100	0	20	2 544.9	21199	100	0	**22.11**	**0.163**
High	10	2 545.6	21206	50	0	20	2 560.0	21350	100	0	22.05	0.160
	20	2 550.1	21251	100	0	10	2 564.5	21395	50	0	22.04	0.160
	15	2 552.7	21277	75	0	10	2 564.7	21397	50	0	22.07	0.161
	15	2 547.5	21225	75	0	15	2 562.5	21375	75	0	22.04	0.160
	15	2 542.9	21179	75	0	20	2 560.0	21350	100	0	22.01	0.159
	20	2 545.1	21201	100	0	15	2 562.2	21372	75	0	22.01	0.159
	20	2 540.2	21152	100	0	20	2 560.0	21350	100	0	22.10	0.162

Note;

QPSK Modulation with Full RB

ULCA 7C												
Ch.	PCC					SCC					Power	
	BW [MHz]	Freq. [MHz]	Ch.	RB	RB Offset	BW [MHz]	Freq. [MHz]	Ch.	RB	RB Offset	(dB m)	(W)
Low	10	2 505.5	20805	50	0	20	2 519.9	20949	100	0	21.02	0.126
	20	2 510.0	20850	100	0	10	2 524.4	20994	50	0	21.04	0.127
	15	2 507.5	20825	75	0	10	2 519.5	20945	50	0	21.07	0.128
	15	2 507.5	20825	75	0	15	2 522.5	20975	75	0	20.98	0.125
	15	2 507.8	20828	75	0	20	2 524.9	20999	100	0	20.99	0.126
	20	2 510.0	20850	100	0	15	2 527.1	21021	75	0	20.98	0.125
	20	2 510.0	20850	100	0	20	2 529.8	21048	100	0	21.09	0.129
Middle	10	2 525.6	21006	50	0	20	2 540.0	21150	100	0	21.00	0.126
	20	2 530.1	21051	100	0	10	2 544.5	21195	50	0	21.99	0.158
	15	2 530.1	21051	75	0	10	2 542.1	21171	50	0	21.89	0.155
	15	2 527.5	21025	75	0	15	2 542.5	21175	75	0	22.05	0.160
	15	2 525.3	21003	75	0	20	2 542.4	21174	100	0	22.06	0.161
	20	2 527.6	21026	100	0	15	2 544.7	21197	75	0	22.01	0.159
	20	2 525.1	21001	100	0	20	2 544.9	21199	100	0	22.05	0.160
High	10	2 545.6	21206	50	0	20	2 560.0	21350	100	0	22.04	0.160
	20	2 550.1	21251	100	0	10	2 564.5	21395	50	0	22.01	0.159
	15	2 552.7	21277	75	0	10	2 564.7	21397	50	0	21.95	0.157
	15	2 547.5	21225	75	0	15	2 562.5	21375	75	0	21.96	0.157
	15	2 542.9	21179	75	0	20	2 560.0	21350	100	0	22.06	0.161
	20	2 545.1	21201	100	0	15	2 562.2	21372	75	0	22.05	0.160
	20	2 540.2	21152	100	0	20	2 560.0	21350	100	0	**22.10**	**0.162**

Note;

16QAM Modulation with Full RB

ULCA 66B												
Ch.	PCC					SCC					Power	
	BW [㎒]	Freq. [㎒]	Ch.	RB	RB Offset	BW [㎒]	Freq. [㎒]	Ch.	RB	RB Offset	(dB m)	(W)
Low	5	1 712.5	131997	1	24	5	1 717.3	132045	1	0	23.56	0.227
	5	1 712.8	132000	1	24	10	1 720.0	132072	1	0	23.62	0.230
	10	1 715.0	132022	1	49	5	1 722.2	132094	1	0	23.60	0.229
	5	1 713.0	132002	1	24	15	1 722.3	132095	1	0	23.72	0.236
	15	1 717.5	132047	1	74	5	1 726.8	132140	1	0	23.71	0.235
	10	1 715.0	132022	1	49	10	1 724.9	132121	1	0	**23.77**	**0.238**
Middle	5	1 752.6	132398	1	24	5	1 757.4	132446	1	0	23.55	0.226
	5	1 750.3	132375	1	24	10	1 757.5	132447	1	0	23.71	0.235
	10	1 752.5	132397	1	49	5	1 759.7	132469	1	0	23.65	0.232
	5	1 748.1	132353	1	24	15	1 757.4	132446	1	0	23.69	0.234
	15	1 752.6	132398	1	74	5	1 761.9	132491	1	0	23.70	0.234
	10	1 750.1	132373	1	49	10	1 760.0	132472	1	0	23.40	0.219
High	5	1 772.7	132599	1	24	5	1 777.5	132647	1	0	23.55	0.226
	5	1 767.8	132550	1	24	10	1 775.0	132622	1	0	23.58	0.228
	10	1 770.0	132572	1	49	5	1 777.2	132644	1	0	23.61	0.230
	5	1 763.2	132504	1	24	15	1 772.5	132597	1	0	23.63	0.231
	15	1 767.7	132549	1	74	5	1 777.0	132642	1	0	23.66	0.232
	10	1 765.1	132523	1	49	10	1 775.0	132622	1	0	23.66	0.232

Note;

QPSK Modulation with 1 RB

ULCA 66B												
Ch.	PCC					SCC					Power	
	BW [MHz]	Freq. [MHz]	Ch.	RB	RB Offset	BW [MHz]	Freq. [MHz]	Ch.	RB	RB Offset	(dB m)	(W)
Low	5	1 712.5	131997	1	24	5	1 717.3	132045	1	0	22.60	0.182
	5	1 712.8	132000	1	24	10	1 720.0	132072	1	0	22.84	0.192
	10	1 715.0	132022	1	49	5	1 722.2	132094	1	0	22.78	0.190
	5	1 713.0	132002	1	24	15	1 722.3	132095	1	0	22.85	0.193
	15	1 717.5	132047	1	74	5	1 726.8	132140	1	0	22.86	0.193
	10	1 715.0	132022	1	49	10	1 724.9	132121	1	0	22.87	0.194
Middle	5	1 752.6	132398	1	24	5	1 757.4	132446	1	0	22.58	0.181
	5	1 750.3	132375	1	24	10	1 757.5	132447	1	0	22.75	0.188
	10	1 752.5	132397	1	49	5	1 759.7	132469	1	0	22.89	0.195
	5	1 748.1	132353	1	24	15	1 757.4	132446	1	0	22.85	0.193
	15	1 752.6	132398	1	74	5	1 761.9	132491	1	0	22.88	0.194
	10	1 750.1	132373	1	49	10	1 760.0	132472	1	0	**22.92**	**0.196**
High	5	1 772.7	132599	1	24	5	1 777.5	132647	1	0	22.68	0.185
	5	1 767.8	132550	1	24	10	1 775.0	132622	1	0	22.64	0.184
	10	1 770.0	132572	1	49	5	1 777.2	132644	1	0	22.80	0.191
	5	1 763.2	132504	1	24	15	1 772.5	132597	1	0	22.81	0.191
	15	1 767.7	132549	1	74	5	1 777.0	132642	1	0	22.78	0.190
	10	1 765.1	132523	1	49	10	1 775.0	132622	1	0	22.81	0.191

Note;

16QAM Modulation with 1 RB

ULCA 66B												
Ch.	PCC					SCC					Power	
	BW [MHz]	Freq. [MHz]	Ch.	RB	RB Offset	BW [MHz]	Freq. [MHz]	Ch.	RB	RB Offset	(dB m)	(W)
Low	5	1 712.5	131997	25	0	5	1 717.3	132045	25	0	20.83	0.121
	5	1 712.8	132000	25	0	10	1 720.0	132072	50	0	20.89	0.123
	10	1 715.0	132022	50	0	5	1 722.2	132094	25	0	20.87	0.122
	5	1 713.0	132002	25	0	15	1 722.3	132095	75	0	20.89	0.123
	15	1 717.5	132047	75	0	5	1 726.8	132140	25	0	20.90	0.123
	10	1 715.0	132022	50	0	10	1 724.9	132121	50	0	**20.94**	**0.124**
Middle	5	1 752.6	132398	25	0	5	1 757.4	132446	25	0	20.88	0.122
	5	1 750.3	132375	25	0	10	1 757.5	132447	50	0	20.84	0.121
	10	1 752.5	132397	50	0	5	1 759.7	132469	25	0	20.75	0.119
	5	1 748.1	132353	25	0	15	1 757.4	132446	75	0	20.68	0.117
	15	1 752.6	132398	75	0	5	1 761.9	132491	25	0	20.87	0.122
	10	1 750.1	132373	50	0	10	1 760.0	132472	50	0	20.91	0.123
High	5	1 772.7	132599	25	0	5	1 777.5	132647	25	0	20.82	0.121
	5	1 767.8	132550	25	0	10	1 775.0	132622	50	0	20.84	0.121
	10	1 770.0	132572	50	0	5	1 777.2	132644	25	0	20.75	0.119
	5	1 763.2	132504	25	0	15	1 772.5	132597	75	0	20.69	0.117
	15	1 767.7	132549	75	0	5	1 777.0	132642	25	0	20.72	0.118
	10	1 765.1	132523	50	0	10	1 775.0	132622	50	0	20.85	0.122

Note;

QPSK Modulation with Full RB

ULCA 66B												
Ch.	PCC					SCC					Power	
	BW [MHz]	Freq. [MHz]	Ch.	RB	RB Offset	BW [MHz]	Freq. [MHz]	Ch.	RB	RB Offset	(dB m)	(W)
Low	5	1 712.5	131997	25	0	5	1 717.3	132045	25	0	19.93	0.098
	5	1 712.8	132000	25	0	10	1 720.0	132072	50	0	19.91	0.098
	10	1 715.0	132022	50	0	5	1 722.2	132094	25	0	19.90	0.098
	5	1 713.0	132002	25	0	15	1 722.3	132095	75	0	19.91	0.098
	15	1 717.5	132047	75	0	5	1 726.8	132140	25	0	19.89	0.097
	10	1 715.0	132022	50	0	10	1 724.9	132121	50	0	**19.94**	**0.099**
Middle	5	1 752.6	132398	25	0	5	1 757.4	132446	25	0	19.85	0.097
	5	1 750.3	132375	25	0	10	1 757.5	132447	50	0	19.87	0.097
	10	1 752.5	132397	50	0	5	1 759.7	132469	25	0	19.79	0.095
	5	1 748.1	132353	25	0	15	1 757.4	132446	75	0	19.88	0.097
	15	1 752.6	132398	75	0	5	1 761.9	132491	25	0	19.82	0.096
	10	1 750.1	132373	50	0	10	1 760.0	132472	50	0	19.75	0.094
High	5	1 772.7	132599	25	0	5	1 777.5	132647	25	0	19.79	0.095
	5	1 767.8	132550	25	0	10	1 775.0	132622	50	0	19.87	0.097
	10	1 770.0	132572	50	0	5	1 777.2	132644	25	0	19.77	0.095
	5	1 763.2	132504	25	0	15	1 772.5	132597	75	0	19.69	0.093
	15	1 767.7	132549	75	0	5	1 777.0	132642	25	0	19.82	0.096
	10	1 765.1	132523	50	0	10	1 775.0	132622	50	0	19.91	0.098

Note;

16QAM Modulation with Full RB