ENGLISH: Original instructions

INSTRUCTION MANUAL

Rechargeable Wall Scanner

DWD181

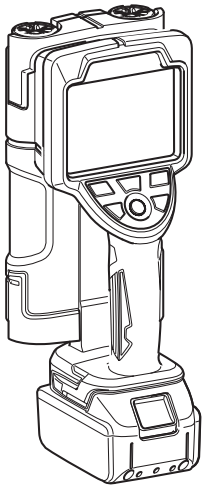

Read before use.

Contents

Specifications - 3
  Applicable battery cartridge - 4
  Continuous operating time per one time of charge (*) - 4
Symbols - 5
Intended Use - 5
Laser Beam Related Safety Standards - 6
Safety Declaration - 6
Radio Standards - 6
Déclaration sur la sécurité - 9
Normes radioélectriques - 9
Safety Warnings - 12
Important Safety Instructions for Battery Cartridge - 18
  Tips for maintaining maximum battery life - 19
Names of Parts - 20
  Names of exterior parts - 20
  Names of operation buttons - 21
Standard Accessories - 21
Optional Accessories - 22
Battery - 23
  Battery - 23
  For long battery life - 23
Installing or Removing Battery Cartridge - 24
Using the Wall Scanner - 25
  Operation flow - 25
  Startup - 26
  Selecting a scan mode - 27
  Selecting a scene - 28
  Scanning - 30
  Scan result display - 32
  Marking the locations of buried objects - 34
  Shutdown - 35
Settings - 36
Operation - 39
  Searching for iron bars in concrete - 39
  Searching for wiring resin pipes in concrete - 41
  Searching for a pillar behind a gypsum board - 46
  Searching for iron bars in a block fence - 48
  To scan better - 51
Protection System - 55
  Protective functions for the scanner and the battery - 55
Maintenance - 57
  Care of the product - 57

Specifications

Major function \ Model		DWD181
Voltage		14.4 V DC/ 18 V DC
Maximum scan depth		180 mm (7 1/16") (*1)
Accuracy of depth to object		± 5 mm (3/16") (*1, *2)
Minimum detectable object-object distance		40 mm (1 9/16") (*1)
Scan guide laser	**Light source**	Red semiconductor laser
	Wavelength	645–660 nm
	Optical output	0.39 mW or below (Class 1)
Operating temperature range		-10 °C to + 40 °C (14 °F to 104 °F)
Storage temperature range		-20 °C to + 50 °C (-4 °F to 122 °F)
Relative Humidity		5–60% (Condensation not allowed)
ESD protective measures		Level: 4 (IEC61000-4-2)
Product dimensions (L × W × H)		259 mm × 118 mm × 107 mm (10 3/16" × 4 5/8" × 4 3/16") (Except the battery)
Weight		1.0 kg (2.2 lbs) (Except the battery)

Operating environment: Indoor use
Altitude: Up to 2,000 m (6,561 11/16')
Pollution degree: 2

*1 Varies by the size, shape and material of the buried material, as well as the material, condition and internal structure of the scanned wall.

*2 When an iron bar of 150 mm (5 15/16") is detected in concrete

Applicable battery cartridge

BL1415N/BL1430B/BL1460B/BL1815N/BL1820B/BL1830B/BL1840B/BL1850B/BL1860B

- Some of the battery cartridges listed above may not be available depending on your region of residence.

⚠WARNING

Only use the battery cartridges listed above.

- Use of any other battery cartridges may cause injury and/or fire.

Continuous operating time per one time of charge (*)

Battery \ Model	DWD181
BL1860B	Approx. 28 hours

- Major functions, shapes and other specifications are subject to change for improvement.

(*) The continuous operating time is for reference purposes. It varies by the battery's charge status and the operating environment.

Symbols

The definitions below describe the level of severity for each signal word and the meaning of each symbol used in this manual.
Please read the manual and pay attention to these symbols.

	: Read instruction manual.
DANGER	: This indicates the risk of death or frequent serious injury.
WARNING	: This indicates the risk of serious injury.
CAUTION	: This indicates the risk of light injury.
NOTICE **NOTE**	: This indicates the risk of malfunction or damage to property.
	: This indicates the risk of electric shock.
	: This indicates the risk of fire.
	: Laser warning
	: Only for EU countries Do not dispose of electric equipment or battery pack together with household waste material! In observance of the European Directives, on Waste Electric and Electronic Equipment and Batteries and Accumulators and Waste Batteries and Accumulators and their implementation in accordance with national laws, electric equipment and batteries and battery pack(s) that have reached the end of their life must be collected separately and returned to an environmentally compatible recycling facility.

Intended Use

This product is intended to check the locations of iron bars, plastic pipes and wires buried in concrete, and of wooden materials and such behind walls.

Laser Beam Related Safety Standards

This product complies with the following standards:
- IEC 60825-1:2014
- FDA: Complies with 21 CFR 1040.10 and 1040.11 except for deviations pursuant to Laser Notice No.50, dated June 24, 2007

LASER RADIATION
DO NOT STARE INTO BEAM
CLASS 1 LASER PRODUCT

Safety Declaration

This product complies with the following standards:
- IEC61010-1:2010 (3rd Edition) Safety requirements for electrical equipment for measurement, control, and laboratory use
  The usage conditions of this product for compliance with this standard are as follows.

⚠CAUTION - When installing the BL1415N/BL1430B/BL1460B/BL1815N/BL1820B/BL1830B/BL1840B/BL1850B/BL1860B battery cartridge (This caution is an explanation for labels used on this product.)
Use only the genuine Makita batteries listed above. Use of non-genuine Makita batteries, or batteries that have been altered, may result in the battery bursting causing fires personal injury and damage. It will also void the Makita warranty for the Makita tool and charger.

Radio Standards

- FCC Part15 Subpart B: Federal Communications Commission (FCC), Equipment authorization of unintentional radiators
- FCC Part15 Subpart F: Federal Communications Commissions (FCC), Ultra-wideband Operations
- ICES003: Canada ICE regulations
- EN301489-1
- EN301489-33
- EN62311
- EN302066

⚠CAUTION

- Changes or modifications not expressly approved by the party responsible for compliance could void the user's authority to operate the equipment.

NOTE

- This equipment has been tested and found to comply with the limits for a Class A digital device, pursuant to Part 15 of the FCC Rules. These limits are designed to provide reasonable protection against harmful interference when the equipment is operated in a commercial environment. This equipment generates, uses, and can radiate radio frequency energy and, if not installed and used in accordance with the instruction manual, may cause harmful interference to radio communications. Operation of this equipment in a residential area is likely to cause harmful interference in which case the user will be required to correct the interference at his own expense.
- This device complies with part 15 of the FCC Rules. Operation is subject to the following two conditions:

(1) This device may not cause harmful interference, and
(2) this device must accept any interference received, including interference that may cause undesired operation.

Section 15.525 Coordination requirements.
(a) UWB imaging systems require coordination through the FCC before the equipment may be used. The operator shall comply with any constraints on equipment usage resulting from this coordination.
(b) The users of UWB imaging devices shall supply operational areas to the FCC Office of Engineering and Technology, which shall coordinate this information with the Federal Government through the National Telecommunications and Information Administration. The information provided by the UWB operator shall include the name, address and other pertinent contact information of the user, the desired geographical area(s) of operation, and the FCC ID number and other nomenclature of the UWB device. If the imaging device is intended to be used for mobile applications, the geographical area(s) of operation may be the state(s) or county(ies) in which the equipment will be operated. The operator of an imaging system used for fixed operation shall supply a specific geographical location or the address at which the equipment will be operated. This material shall be submitted to the following address:

Frequency Coordination Branch, OET
Federal Communications Commission
445 12th Street, SW
Washington, D.C. 20554
Attn: UWB Coordination

(c) The manufacturers, or their authorized sales agents, must inform purchasers and users of their systems of the requirement to undertake detailed coordination of operational areas with the FCC prior to the equipment being operated.
(d) Users of authorized, coordinated UWB systems may transfer them to other qualified users and to different locations upon coordination of change of ownership or location to the FCC and coordination with existing authorized operations.
(e) The FCC/NTIA coordination report shall identify those geographical areas within which the operation of an imaging system requires additional coordination or within which the operation of an imaging system is prohibited. If additional coordination is required for operation within specific geographical areas, a local coordination contact will be provided. Except for operation within these designated areas, once the information requested on the UWB imaging system is submitted to the FCC no additional coordination with the FCC is required provided the reported areas of operation do not change. If the area of operation changes, updated information shall be submitted to the FCC following the procedure in paragraph (b) of this section.
(f) The coordination of routine UWB operations shall not take longer than 15 business days from the receipt of the coordination request by NTIA. Special temporary operations may be handled with an expedited turn-around time when circumstances warrant. The operation of UWB systems in emergency situations involving the safety of life or property may occur without coordination provided a notification procedure, similar to that contained in Section 2.405(a) through (e) of this chapter, is followed by the UWB equipment user.

For Canadian Customers only
This In-wall Radar Imaging Device shall be operated where the device is directed at the wall and in contact with or within 20 cm of the wall surface. This In-wall Radar Imaging Device shall be operated only by law enforcement agencies, scientific research institutes, commercial mining companies, construction companies, and emergency rescue or firefighting organizations.

Operation is subject to the following 2 conditions: (1) this device may not cause interference, and (2) this device must accept any interference, including interference that may cause undesired operation of the device.

Déclaration sur la sécurité

Ce produit est conforme aux normes suivantes :

- IEC61010-1:2010 (3e édition) Règles de sécurité pour appareils électriques de mesurage, de régulation et de laboratoire
  Les conditions d'utilisation de ce produit conformément à cette norme sont les suivantes.

⚠ **ATTENTION - Lors de la mise en place de la cartouche de batterie BL1415N, BL1430B, BL1460B, BL1815N, BL1820B, BL1830B, BL1840B, BL1850B ou BL1860B (Cet avertissement explique les étiquettes apposées sur ce produit.)**
Utilisez exclusivement les batteries Makita d'origine listées ci-dessus. Les batteries autres que celles fabriquées par Makita ou les batteries modifiées peuvent exploser et causer un incendie, une blessure ou des dommages. Leur usage annulerait également la garantie Makita fournie pour l'appareil et le chargeur.

Normes radioélectriques

- FCC, partie 15, sous-partie B : « Federal Communications Commission (FCC), Equipment authorization of unintentional radiators (autorisation d'équipement à rayonnement non intentionnel) ».
- FCC, partie 15, sous-partie F : « Federal Communications Commissions (FCC), Ultra-wideband Operations (utilisation d'équipement à bande ultralarge) ».
- ICES003 : Règles sur l'équipement de technologie de l'information (ETI) du Canada
- EN301489-1
- EN301489-33
- EN62311
- EN302066

⚠ ATTENTION

- Toute modification ou altération n'ayant pas été approuvée expressément par la partie responsable de la conformité annulerait le droit de l'utilisateur de se servir de cet équipement.

NOTE

- Cet équipement a été testé et jugé conforme aux limites pour un équipement numérique de Classe A en vertu de la Partie 15 des Règles de la FCC. Ces limites sont conçues pour assurer une protection raisonnable contre les interférences nuisibles lorsque l'équipement est utilisé dans un environnement commercial. Cet équipement émet, utilise et peut rayonner de l'énergie de fréquence radio et, s'il n'est pas installé et utilisé conformément aux instructions, il pourrait causer des interférences nuisibles aux communications radio. L'utilisation de cet appareil dans une zone résidentielle risque de causer un brouillage préjudiciable, auquel cas l'utilisateur devra corriger cette situation à ses propres frais.
- Cet appareil est conforme à la partie 15 des règles de la FCC. Son utilisation est assujettie aux deux conditions suivantes :

(1) cet appareil ne doit pas causer de brouillage préjudiciable, et
(2) cet appareil doit accepter toute interférence reçue, y compris toute interférence qui pourrait causer un fonctionnement indésirable.

Section 15.525 Obligation de coordination
(a) Les systèmes d'imagerie UWB nécessitent une coordination en passant par la FCC avant que les équipements puissent être utilisés. L'opérateur devra respecter les restrictions aux emplois des équipements qui résultent de cette coordination.
(b) Les utilisateurs des appareils d'imagerie UWB devront communiquer des zones d'utilisation au Bureau de l'ingénierie et de la technologie de la FCC, qui coordonnera cette information avec le Gouvernement fédéral par le biais de la National Telecommunications and Information Administration. Les renseignements communiqués par l'opérateur UWB incluront le nom, l'adresse et les autres coordonnées pertinentes qui sont nécessaires pour contacter l'utilisateur, la ou les zone(s) géographique(s) d'utilisation et le numéro d'identification de la FCC ainsi que toute autre nomenclature de l'appareil UWB. Si le dispositif d'imagerie doit être utilisé dans le cadre d'applications mobiles, la ou les zone(s) géographique(s) d'utilisation peut ou peuvent être l'État/les États ou le(s) comté(s) dans lequel ou lesquels les équipements seront utilisés. L'opérateur d'un système d'imagerie utilisé dans le cadre d'une application fixe devra indiquer un emplacement géographique précis où les équipements seront utilisés. Ces renseignements devront être communiqués à l'adresse suivante :

Frequency Coordination Branch, OET
Federal Communications Commission
445 12th Street, SW
Washington, D.C. 20554 (États-Unis)
Attn: UWB Coordination

(c) Les fabricants, ou leurs agents commerciaux agréés, doivent informer les acheteurs et les utilisateurs de leurs systèmes de l'obligation d'effectuer une coordination détaillée de leurs zones d'utilisation avec la FCC avant que les équipements ne soient mis en marche.
(d) Les utilisateurs de systèmes UWB coordonnés et autorisés peuvent les transférer à d'autres utilisateurs éligibles et à des endroits différents moyennant coordination de la cession ou du changement de lieu d'utilisation avec la FCC et coordination avec les exploitations autorisées existantes.
(e) Le rapport de coordination FCC/NTIA devra identifier les zones géographiques à l'intérieur desquelles l'utilisation d'un système d'imagerie nécessite une coordination additionnelle ou à l'intérieur duquel l'exploitation d'un système d'imagerie est interdite. Si une coordination additionnelle est requise pour une utilisation à l'intérieur de zones géographiques spécifiques, un contact pour la coordination locale sera communiqué. Sauf en cas d'utilisation à l'intérieur de ces zones ainsi désignées, après que les informations demandées auront été soumises à la FCC, aucune autre coordination avec la FCC n'est nécessaire tant que les zones d'utilisation indiquées ne changeront pas. Si la zone d'utilisation change, des informations mises à jour devront être soumises à la FCC en suivant la procédure décrite au paragraphe (b) de la présente section.
(f) La coordination des opérations UWB de routine ne devra pas prendre plus de 15 jours ouvrés à compter de la réception de la demande de coordination par NTIA. Des opérations temporaires particulières pourront être traitées de façon accélérée lorsque les circonstances le justifient. L'utilisation de systèmes UWB dans des situations d'urgence dans lesquelles la vie de certaines personnes peut être menacée ou si des dommages aux biens sont possibles peut avoir lieu sans coordination préalable à condition qu'une procédure de notification similaire à celle qui est indiquée à la Section 2.405(a) à (e) du présent chapitre soit suivie par l'utilisateur d'équipements UWB.

À l'intention des clients canadiens exclusivement :
Ce dispositif mural radar d'imagerie devra être utilisé lorsque le radar est pointé vers le mur et est soit en contact avec la surface du mur, soit à moins de 20 cm de la surface du mur. Ce dispositif mural radar d'imagerie ne devra être utilisé que par les forces de l'ordre, les instituts de recherche scientifique, les compagnies minières, les entreprises de construction, les organisations de sauvetage d'urgence et les pompiers.

Son utilisation est assujettie aux deux conditions suivantes : (1) cet appareil ne doit pas causer d'interférence et (2) cet appareil doit accepter toute interférence, y compris toute interférence qui pourrait causer un fonctionnement indésirable de cet appareil.

⚠WARNING

Read all safety warnings, instructions, illustrations and specifications provided with the product. Failure to follow all instructions listed below may result in electric shock, fire and/or serious injury.

Save all warnings and instructions for future reference.

⚠WARNING - Laser safety

- Do not look directly into the laser beam on optical instruments.
- Directly looking at the laser beam by telescopic optics, magnifying glass or similar instruments is dangerous.
- Do not stare directly at the laser beam.
- Avoid locating the path of the laser beam at eye height.
- Do not enter the path of the laser beam.
- Do not place reflective objects in the path of the laser beam.
- Do not point the laser beam at other persons.

Continuously looking at laser beams may damage your eyes. If your eyes might be impaired, immediately seek treatment by a physician.

⚠CAUTION

- Laser light is bright and blinding - Do not shine at aircraft or vehicles at any distance.

⚠WARNING - Work area safety

1. **Keep work area clean and well lit.**
   Cluttered or dark areas invite accidents.
2. **Do not operate the product in explosive atmospheres, such as in the presence of flammable liquids, gases or dust.**
   Products create sparks which may ignite the dust or fumes.
3. **Keep children and bystanders away while operating the product.**
   Distractions can cause you to lose control.
4. When working at heights, be very sure that there is no one underneath.
5. Do not use the product in a place that may affect any equipment or systems that can pose a direct risk of death or injury, or those that can cause a great deal of damage to property (outer-space equipment, submarine repeaters, nuclear control systems, aircraft control systems, infrastructural systems of plants, military equipment, etc.).

⚠WARNING - Operator safety precautions

1. **Do not work in an awkward position.**
   Always keep proper footing to keep your balance.
2. **Work with proper clothing.**
   For working outdoors, we recommend the use of rubber gloves and nonslip footwear. If you have long hair, cover it with a cap, hair cover, etc.
3. **When using the product, firmly grip the handle so as not to drop it.**

⚠WARNING - Electrical safety

1. **Avoid body contact with earthed or grounded surfaces such as pipes, radiators, ranges and refrigerators.**
   There is an increased risk of electric shock if your body is earthed or grounded.
2. **Do not expose the product to rain or wet conditions.**
   Water entering the product will increase the risk of electric shock.
3. **Do not short-circuit terminals on the product.**
   Do not allow pins or wire to get inside the USB terminal. This may cause a short-circuit, which may result in the risk of smoke emission or ignition.
4. **Do not hold the power supply cable by your mouth.**
   Doing so might cause an electric shock.

⚠WARNING - Storage

1. **Properly store the charging tool when it is not in use.** Store it in a safe location out of the reach of children and in a dry location under lock and key.
2. Keep the product away from elevated temperatures such as under direct sunlight and in a car.

⚠WARNING - Battery product use and care

1. **Recharge only with the charger specified by the manufacturer.** A charger that is suitable for one type of battery pack may create a risk of fire when used with another battery pack.
2. **Charge the battery in a well-ventilated place. Do not cover the battery and/or charger with a cloth or such when charging.** Doing so may cause a burst and/or fire.
3. **Use the product only with specifically designated battery packs.** Use of any other battery packs may create a risk of injury and fire.
4. **When battery pack is not in use, keep it away from other metal objects, like paper clips, coins, keys, nails, screws or other small metal objects, that can make a connection from one terminal to another.** Shorting the battery terminals together may cause burns or a fire.
5. **Under abusive conditions, liquid may be ejected from the battery; avoid contact. If contact accidentally occurs, flush with water. If liquid contacts eyes, additionally seek medical help.** Liquid ejected from the battery may cause irritation or burns.
6. **Do not use a battery pack or product that is damaged or modified.** Damaged or modified batteries may exhibit unpredictable behaviour resulting in fire, explosion or risk of injury.
7. **Do not expose a battery pack or product to fire or excessive temperature.** Exposure to fire or temperature above 130 °C (266 °F) may cause explosion.
8. **Follow all charging instructions and do not charge the battery pack or product outside the temperature range specified in the instructions.**
   Charging improperly or at temperatures outside the specified range may damage the battery and increase the risk of fire.
9. **Use Makita battery cartridge only with products specified by Makita.**

⚠WARNING - Maintenance

1. **Have the product serviced by a qualified repair person using only identical replacement parts.** This will ensure that the safety of the product is maintained.
2. **Never service damaged battery packs.** Service of battery packs should only be performed by the manufacturer or authorized service providers.
3. **Follow instruction for changing accessories.**
4. **Do not disassemble, repair, modify or retrofit this product, charger or battery.** Doing so might cause ignition or abnormal operation, which may result in injury.
5. **Inspect this product for damaged parts.** If this product is operating abnormally or malfunctioning, immediately stop use. Continued use of this product in this condition might lead to smoke emission, ignition, electric shock, or injury.

   <Examples of Abnormalities and Malfunction>

   x Power cable and power plug are abnormally hot.

   x The power cable has deep scratches or is deformed.

   x Power turns ON and OFF when the power cable is moved.

   x There is a burning smell.

   x There is a tingling feeling of electricity.

   If you sense a malfunction, such as this product not functioning even after turning the power switch ON, immediately remove the battery and ask the store of purchase or a Makita authorized service center for inspection and repair.
6. **This product complies with relevant safety standard.** Do not modify or retrofit it.
7. **If repair is performed by a person without specialist knowledge and repair skills, not only will the performance of this product not be fully demonstrated but this might also result in accident or injury.**

⚠WARNING - Precautions for scan operation

1. **Do not place stickers or metal materials other than the authorized nameplate to the bottom of the charging tool.**
2. **Wipe clean the wall scanner's bottom and wheels. Dirt such as mud may degrade scan performance if they keep staying.**
3. **Scan performance may be affected in an environment subjected to strong electromagnetic waves, water or surface irregularities on the wall, the wall's construction status such as the use of metallic materials, nonuniform builds inside the wall structure, etc.**
4. **Before working on the structure such as by cutting and drilling, be sure to see architectural drawings and other information in addition to the scan results of the wall scanner.**
5. **A great change in the ambient temperature during operation may degrade scan performance.**
6. **Sufficient performance cannot be achieved at extremely high or low temperatures.**
7. **The LCD panel of the product is not a touch panel. Do not push or apply a strong force onto the LCD panel.**
8. **Handle the LCD panel, which is susceptible to scratches, with care. It will be scratched if rubbed with a cloth when sand or dust is on the surface.**

⚠WARNING - Additional safety

1. **Use the correct accessories.** Use only accessories recommended in this User's Manual and in Makita catalogs. Do not use other accessories since this might result in malfunction, accident or injury.
2. **Check for no damaged parts.**

- Prior to use, fully inspect the product to check for no damage or breakage and see if it can properly operate and can give required functionalities. If abnormality is found, correct it before using it.
- To change or repair parts, follow the instruction manual. For the repair work not mentioned in the instruction manual, contact the store of your purchase or a Makita sales office to make a repair request. For switch malfunctions, contact the store of your purchase or a Makita sales office to make a repair request.
- When abnormality or malfunction is found, stop using the product immediately. Continued use may result in smoke, ignition, electric sock and/or injury.
  <Abnormality and malfunction examples>
  • The product or battery is abnormally hot.
  • The product or battery has a deep scratch or deformation.
  • There is a smell of burning.
  • Electricity is sensed tinglingly.
- If the product has a malfunction such as non-operation even if switched on, immediately remove the battery and contact the store of your purchase or a Makita sales office to make inspection and repair requests.

Important Safety Instructions for Battery Cartridge

1. **Before using battery cartridge, read all instructions and cautionary markings on (1) battery charger, (2) battery, and (3) product using battery.**
2. **Do not disassemble battery cartridge.**
3. **If operating time has become excessively shorter, stop operating immediately. It may result in a risk of overheating, possible burns and even an explosion.**
4. **If electrolyte gets into your eyes, rinse them out with clear water and seek medical attention right away. It may result in loss of your eyesight.**
5. **Do not short the battery cartridge:**
   (1) Do not touch the terminals with any conductive material.
   (2) Avoid storing battery cartridge in a container with other metal objects such as nails, coins, etc.
   (3) Do not expose battery cartridge to water or rain.
   A battery short can cause a large current flow, overheating, possible burns and even a breakdown.
6. **Do not store the tool and battery cartridge in locations where the temperature may reach or exceed 50 °C (122 °F).**
7. **Do not incinerate the battery cartridge even if it is severely damaged or is completely worn out. The battery cartridge can explode in a fire.**
8. **Be careful not to drop or strike battery.**
9. **Do not use a damaged battery.**
10. **The contained lithium-ion batteries are subject to the Dangerous Goods Legislation requirements.**
    For commercial transports e.g. by third parties, forwarding agents, special requirement on packaging and labeling must be observed.
    For preparation of the item being shipped, consulting an expert for hazardous material is required.
    Please also observe possibly more detailed national regulations.
    Tape or mask off open contacts and pack up the battery in such a manner that it cannot move around in the packaging.
11. **When disposing the battery cartridge, remove it from the tool and dispose of it in a safe place. Follow your local regulations relating to disposal of battery.**
12. **Use the batteries only with the products specified by Makita.** Installing the batteries to non-compliant products may result in a fire, excessive heat, explosion, or leak of electrolyte.
13. **If the tool is not used for a long period of time, the battery must be removed from the tool.**

SAVE THESE INSTRUCTIONS.

⚠CAUTION

Only use genuine Makita batteries.
Use of non-genuine Makita batteries, or batteries that have been altered, may result in the battery bursting causing fires, personal injury and damage. It will also void the Makita warranty for the Makita tool and charger.

Tips for maintaining maximum battery life

1. **Charge the battery cartridge before completely discharged. Always stop tool operation and charge the battery cartridge when you notice less tool power.**
2. **Never recharge a fully charged battery cartridge. Overcharging shortens the battery service life.**
3. **Charge the battery cartridge with room temperature at 10 °C - 40 °C (50 °F - 104 °F). Let a hot battery cartridge cool down before charging it.**
4. **Charge the battery cartridge if you do not use it for a long period (more than six months).**

Names of exterior parts

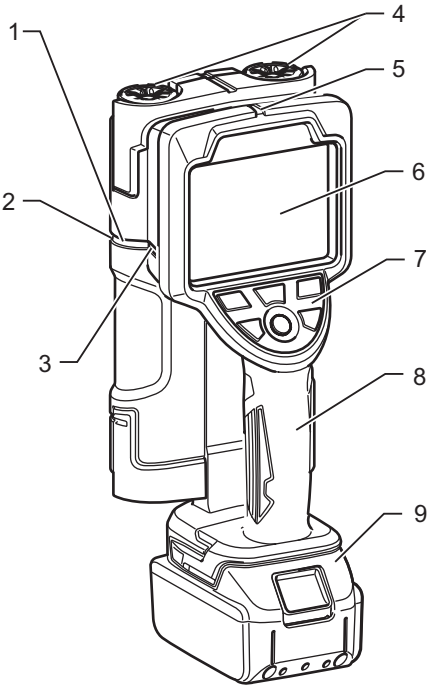

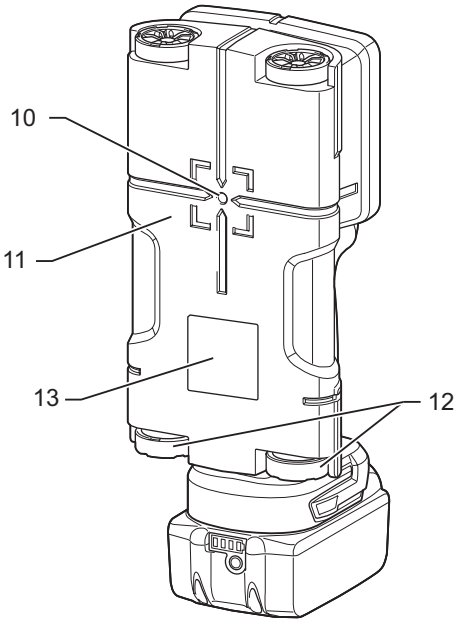

1. Sensor's left edge line (right edge line)
2. Light
3. Guide laser
4. Wheels
5. Sensor's center line
6. Display
7. Operation buttons (6 buttons)
8. Handle
9. Battery
10. Sensor's center point
11. Sensor surface
12. Wheels
13. Product label (nameplate)

Product of laser class 1

Names of Parts

Names of operation buttons

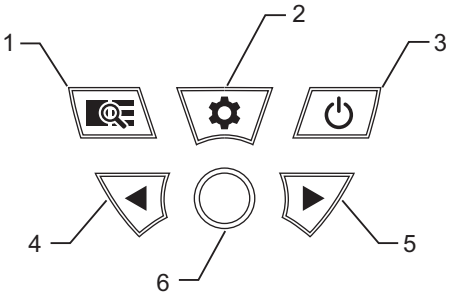

1. Mode button
   Navigates to the scan mode selection screen.
2. Settings button
   - Navigates from your current screen to the settings screen.
   - Goes back from the settings screen to the previous screen.
3. Power button
   Turns ON/OFF the power.
   ON (startup): Press, OFF (shutdown): Press and hold (2 seconds)
4. Left button
   Moves the cursor to the left to select an item, etc.
5. Right button
   Moves the cursor to the right to select an item, etc.
6. Apply button
   - Applies the operation/selection that you have made.
   - Clears data when a scan has been completed to reset to the scan start status.

Standard Accessories

Makpac Type 2
Internal package tray
Instruction Manual (in CD form)
Quick Guide
Safety Instructions

Optional Accessories

For details of options, either refer to the catalog or inquire at the store of purchase or a Makita sales office.

⚠CAUTION

These accessories or attachments are recommended for use with your Makita tool specified in this manual.
The use of any other accessories or attachments might present a risk of injury to persons. Only use accessory or attachment for its stated purpose.

If you need any assistance for more details regarding these accessories, ask your local Makita Service Center.

- Makita genuine battery and charger

NOTE

- Some items in the list may be included in the tool package as standard accessories. They may differ from country to country.

Battery

- At the moment you have just bought the product, the battery, which is not fully charged, may be under the effect of its protection function. (Be careful that the product may start operating if switches are operated.) Prior to use, correctly charge the battery using a specified quick charger.
- When the product is not used, cap the battery with the cover to protect it from water and dust. When the product is not used, store it with the battery removed.

For long battery life

- After the battery change mark is turned on, stop using the battery, and charge it.
- Do not recharge the battery when fully charged.
- Charge the battery in the ambient temperature range of 10°C–40°C (50°F–104°F).
- When the battery is hot, such as when it has just used, we recommend that it be cooled down in the charger and then charged after cooled.
- When the lithium-ion battery is not used for a long time (6 months or more), we recommend that you charge it prior to storage.

Installing or Removing Battery Cartridge

⚠CAUTION

- Always be sure that the tool is switched off and the battery cartridge is removed before adjusting or checking function on the tool.
- Always switch off the tool before installing or removing of the battery cartridge.
- Hold the tool and the battery cartridge firmly when installing or removing battery cartridge. Failure to hold the tool and the battery cartridge firmly may cause them to slip off your hands and result in damage to the tool and battery cartridge and a personal injury.

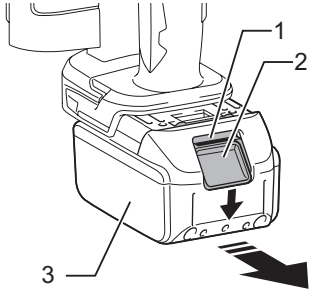

1. Red-colored section
2. Button
3. Battery cartridge

To remove the battery cartridge, slide it from the tool while sliding the button on the front of the cartridge.
To install the battery cartridge, align the tongue on the battery cartridge with the groove in the housing and slip it into place. Insert it all the way until it locks in place with a little click. If you can see the red indicator on the upper side of the button, it is not locked completely.

⚠CAUTION

- Always install the battery cartridge fully until the red indicator cannot be seen. If not, it may accidentally fall out of the tool, causing injury to you or someone around you.
- Do not install the battery cartridge forcibly. If the cartridge does not slide in easily, it is not being inserted correctly.

Operation flow

See below for the basic use of the scanner.

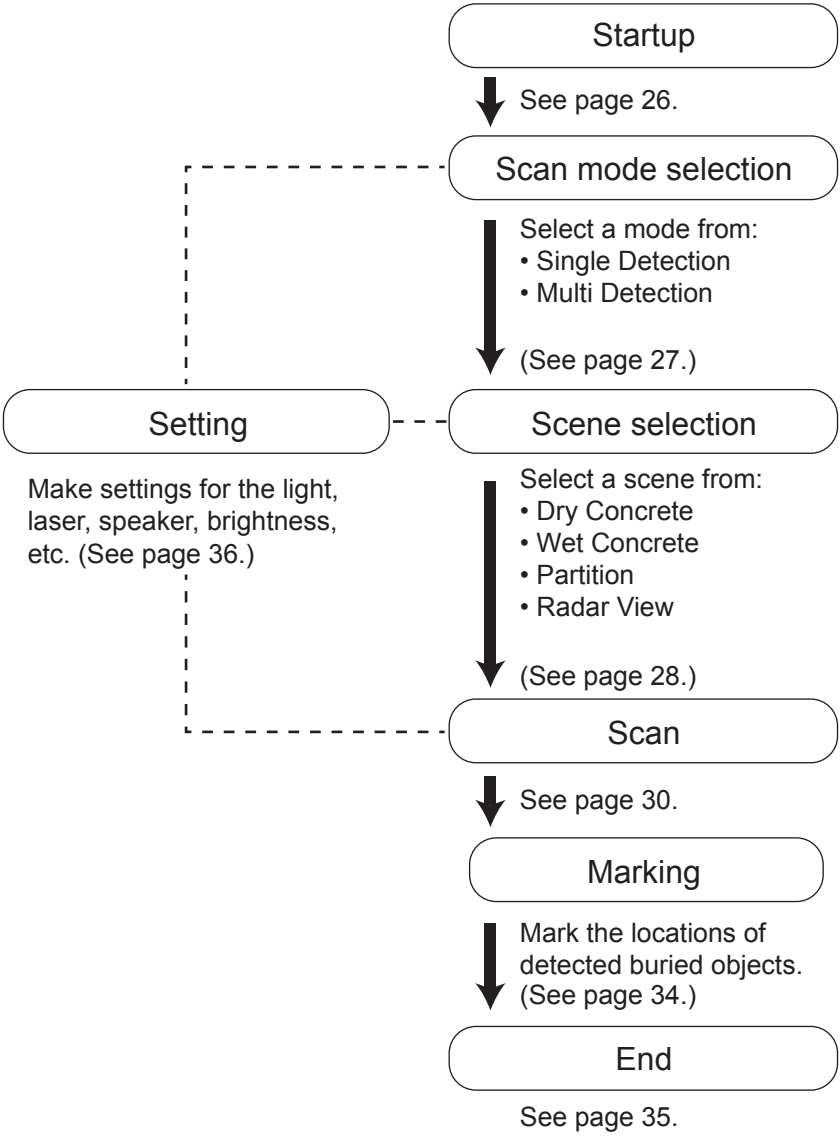

Startup

1. Press the power button (⏻).
2. A signaling sound beeps, and the startup screen is shown in the display.

NOTE

- If the startup screen is not shown, the remaining battery capacity may be low. Charge the battery.
  In the case of a battery equipped with a battery indicator lamp, see the illustration below to know the remaining battery capacity using the battery indicator lamp.

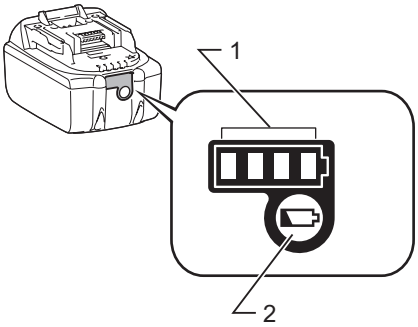

1. Battery indicator lamp
2. Check button

3. The scan mode selection screen is shown.

NOTE

- If you see the battery change mark shown in the top right corner of the display, check the remaining battery capacity, and if the battery capacity is low, shut down the scanner and charge the battery.

Selecting a scan mode

Use the right and left buttons (◀ ▶) to select either the “Single Detection” or “Multi Detection” mode, and press the apply button (◎).

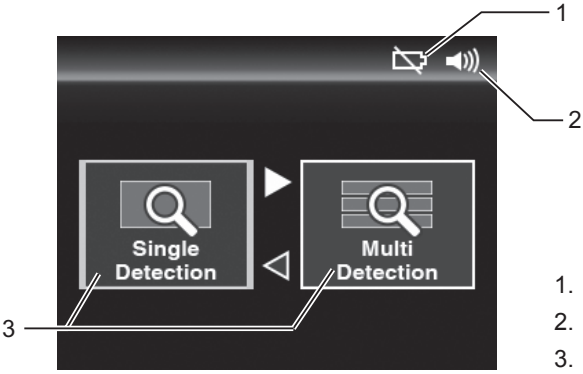

1. Battery change mark
2. Signaling sound on/off
3. Scan mode

1. “Single Detection” mode
   This mode gives you the basic functionality. Move the scanner side to side to detect any buried objects after applying the scanner's sensor surface to the surface from which to detect any buried objects. Scan results are shown in the scanner's display so that you can see the location and depth data of the buried object.
   When there is a buried object under the sensor, a burial detection mark blinks or a beep sounds to let you know of it.

2. “Multi Detection” mode
   This mode performs three lines of buried object scan continuously. The scan results for the three lines are shown in the scanner's display. This mode is useful to scan for buried objects which are not necessarily straight, such as in-concrete power distribution resin tubes.
   (See “Searching for wiring resin pipes in concrete” in page 41.)

Selecting a scene

Use the right and left buttons (◀▶) to select either “Dry Concrete,” “Wet Concrete,” “Partition” or “Radar View,” and press the apply button (◎).

1. Dry Concrete
   (Maximum detection depth: 18 cm (7 1/16"))
   This scene is suitable to scan for objects in dry concrete.

2. Wet Concrete
   (Maximum detection depth: 10 cm (3 15/16"))
   This scene is suitable to scan for objects in wet concrete.
   Concrete needs several months to be completely dried since placed, and the concrete less than one year after the placement is referred to as wet concrete.
   Select this scene in the case of wet concrete, but to make it double sure, it is recommended that “Dry Concrete” be also used.

3. Partition
   (Maximum detection depth: 8 cm (3 1/8"))
   This scene is suitable to scan for objects behind a wooden or gypsum board. (*)

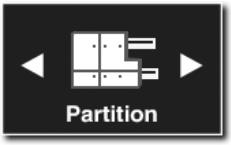

(*) Some buried objects may not be detected up to the maximum detection depth depending on their size, shape and material, as well as the material, condition and internal structure of the wall to be scanned.

4. Radar View
   This scene is suitable to scan for compound objects (multiple types of objects) such as voids and iron bars in a block or brick.
   With no display of burial detection marks, scan results are shown in waveforms only.
   (See “Searching for iron bars in a block fence” in page 48.)(*)

(*) Some buried objects may not be detected up to the maximum detection depth depending on their size, shape and material, as well as the material, condition and internal structure of the wall to be scanned.

Scanning

1. Align the guide laser (the sensor's right and left edge lines) with your intended scan position, and apply the scanner to the surface to be scanned (concrete surface, etc.).

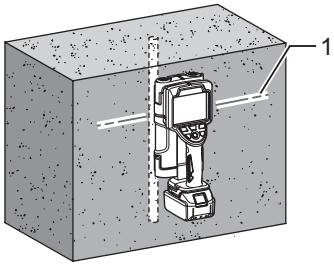

1. Guide laser (the sensor's right and left edge lines)

2. Move the scanner slowly side to side.

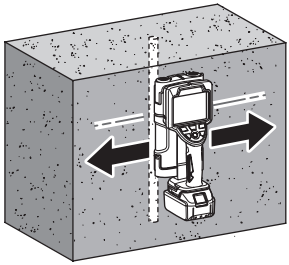

NOTE

- During operation, be careful not to allow the wheels to be away from the surface being scanned.
- Move the scanner slowly. If moved too fast, an error message is shown, during which a scan is unavailable.
- After detection, do not release the scanner from the surface being scanned until marking is completed. If released, scan operation is discontinued.
- During a scan, if the scanner remains at rest for 10 seconds or more, scan operation is discontinued.
- When a scan is started from the right in front of a buried object, scan results may not be shown properly. If scan results do not come out as estimated, change the starting position of scan a little.
- To try scanning again, press the apply button (◎) to clear the display of scan results.

3. Radar scan results are shown on the display.

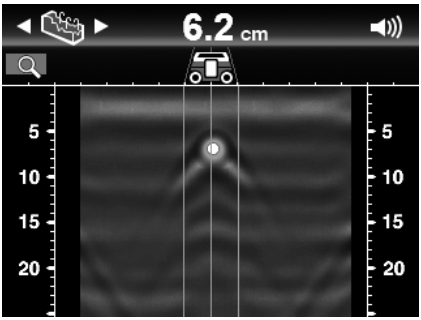

Scan result display

Single Detection

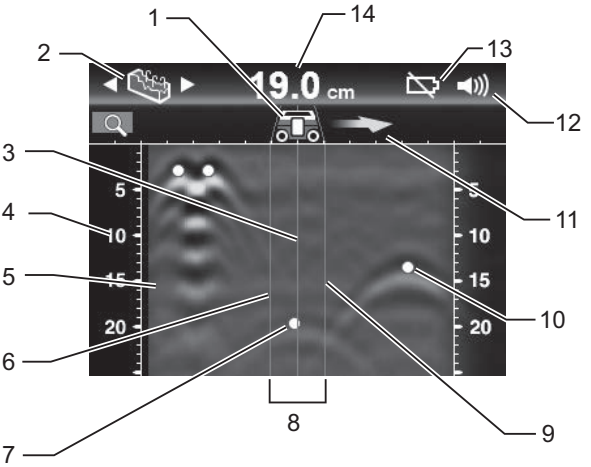

1. Sensor operation status
2. Scene
3. Sensor's center line
4. Depth scale marks
5. Scan operation area
6. Sensor's left edge line (Represents the scanner's left edge)
7. Burial detection mark (In the sensor area) [Blinks in red in a yellow ●]
8. Sensor area
9. Sensor's right edge line (Represents the scanner's right edge)
10. Burial detection mark (Outside the sensor area) [A yellow ●]
11. Operation guide arrow
12. Signaling sound on/off
13. Battery change mark
14. Depth to the buried object

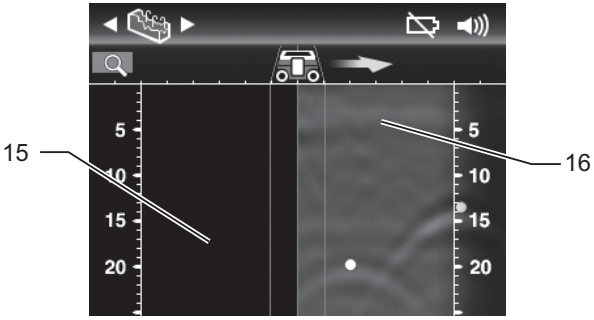

15. Area not yet scanned
16. Area already scanned

Multi Detection

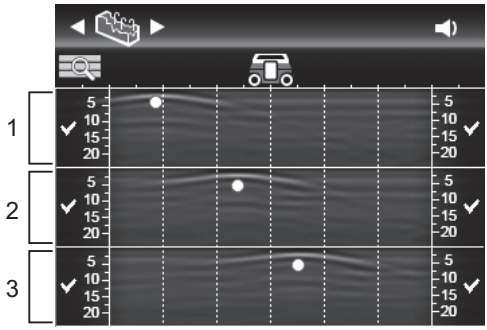

1. Line 1 (scan results)
2. Line 2 (scan results)
3. Line 3 (scan results)

Waveforms

Waveforms are shown when buried objects (iron bars, etc.) in concrete are scanned.
Burial detection marks are shown at points corresponding to the locations of iron bars, etc. (*)

A signaling sound beeps when any burial detection mark is there within the sensor area.

(*) Burial detection marks may not be shown depending on the buried object and the condition or internal structure of the wall to be scanned. In that case, estimate the correct location from the waveform in the image.

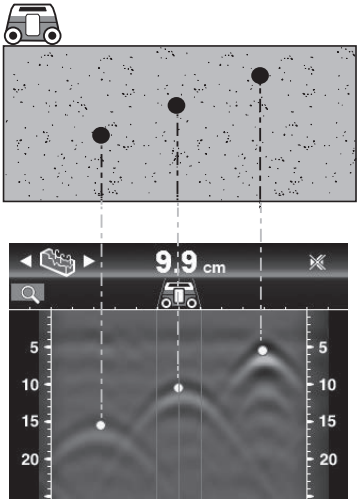

⚠WARNING

Before drilling, sawing or routing into a wall, protect yourself against hazards by using other information sources. As the measuring results can be influenced through ambient conditions or the wall material, there may be a hazard even though the indicator does not indicate an object in the sensor range (no audio signal or beep and **burial detection marks**).

Marking the locations of buried objects

Marking with the use of the sensor's center line

1. Move the scanner to where the burial detection mark on the screen is aligned with the sensor's center line.

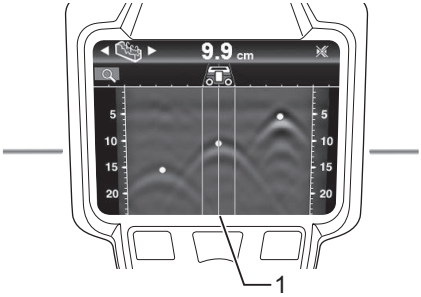

1. Sensor's center line

2. Make a marking at the recess at the center of the scanner's upper edge. The mark represents the center of the buried object.

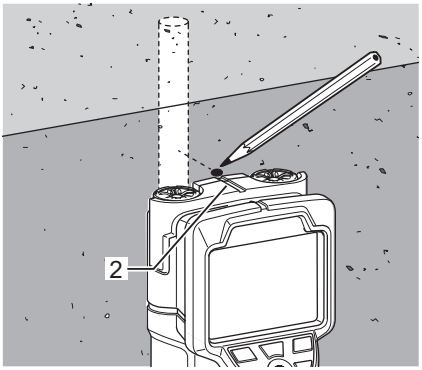

2. Recess

Marking with the use of the sensor's right (left) edge line

1. Move the scanner to where the center of the iron bar detection mark is aligned with the sensor's right edge line.

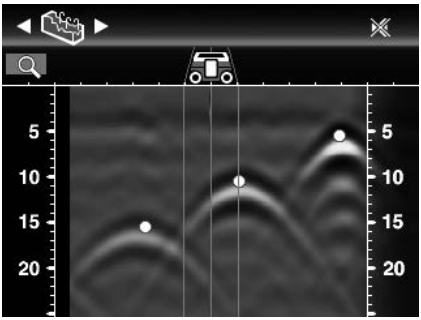

* The sensor's right and left edge lines on the screen represent the scanner's both right and left edge lines.

2. Make a marking at the recess on the scanner's right edge.
   The mark represents the center of the buried object.

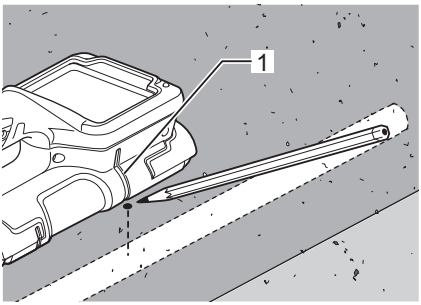

1. Recess

Shutdown

Press and hold the power button (⏻).
The end screen is shown, and after a few seconds, the power is turned off.

NOTE

- Do not remove the battery until the end screen goes out.

Making setting changes

1. Press the settings button (⚙).
   The settings screen is shown.
2. Press the left button (◀) or right button (▶) to move the selection to the settings item to which you want to make changes.

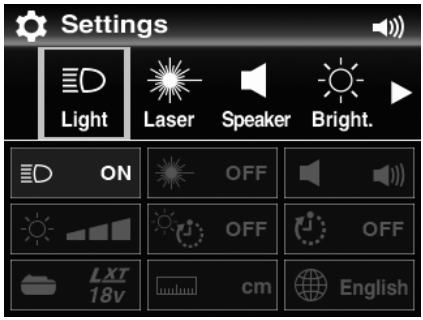

3. Press the apply button (◎).
   The setting options for the item that you have selected are shown.
4. Press the left button (◀) or right button (▶) to select your desired setting option.
   The setting option that you selected is set.

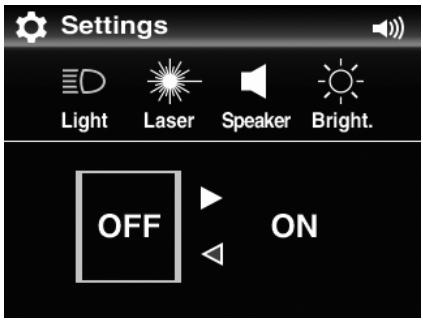

5. Press the apply button (◎).
   The screen reverts to the settings screen.

   To exit the settings screen to go back to the previous screen, press the settings button (⚙).

NOTE

- Setting changes are not reflected if the battery is removed when the settings screen is displayed.
  Do not remove the battery until the end screen goes out by pressing the power button.

List of settings

Setting icon	Description	Setting option	Factory default
Light	Selects “ON” or “OFF” for the light to see scan surfaces in dark places.	ON OFF	ON
Laser	Selects “ON” or “OFF” for the laser to see the "sensor's right and left edge lines" provided at the sensor's right and left sides on the sensor scan surface. (See page 51.)	ON OFF	ON
Speaker	Adjusts the volume of the signaling sound emitted when an operation button is operated or when there is an object detected in the scanner's sensor area.	(Off) (Low) (High)	(High)
Bright.	Adjusts the brightness of the display backlight.	(Low) (Middle) (High)	(Middle)
Sleep	Sets the period of time elapsed before the display backlight, guide laser and light are turned off when the scanner is switched on and no operation takes place.	OFF(*1) 10 sec. 20 sec. 30 sec. 60 sec. 120 sec. 240 sec.	240 sec.
Off Timer	Sets the period of time elapsed before the display backlight, guide laser and light are turned off when the scanner is switched on and no operation takes place.	OFF(*2) 1 min. 3 min. 5 min. 10 min.	5 min.

Setting icon	Description	Setting option	Factory default
Battery	Sets the voltage of the battery used so that the need of battery replacement is reported at an appropriate timing.	14.4 V 18 V	18 V
Unit	Selects the unit of measure for the depth of buried objects.	cm inch Decimal inch Fractional	cm
Lang.	Selects the language used in the display.	English Deutsch Français Italiano Español Nederlands Português Русский	English

*1: Always turned on when “OFF” is selected.
*2: Not switched off automatically when “OFF” is selected.

Searching for iron bars in concrete

- Scan mode:Single Detection
- Scene:Dry Concrete

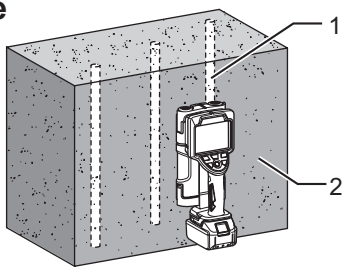

1. Iron bar
2. Concrete

1. Turn on the scanner.
   If the scanner has already been switched on, press the mode button ( ).
2. Select the scan mode of “Single Detection” and press the apply button ( ).

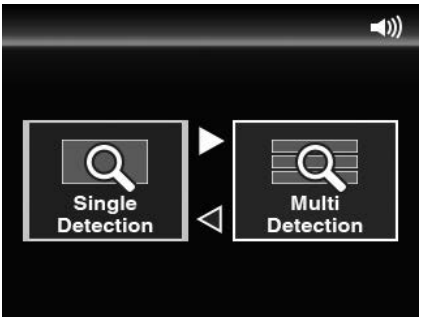

3. Select the scene of “Dry Concrete” and press the apply button ( ).

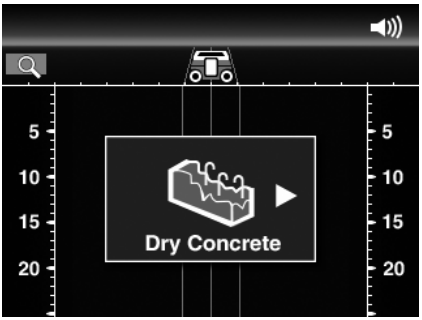

NOTE

- To start scan operation, wait for the operation guide arrow to be shown.

4. Align the guide laser (the sensor's right and left edge lines) with your intended line to scan, and apply the scanner to the concrete surface.
5. Move the scanner slowly side to side.

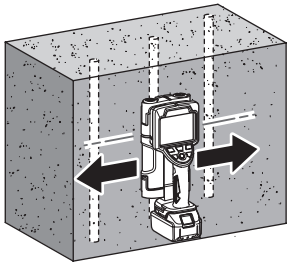

6. Scan results are shown on the display.

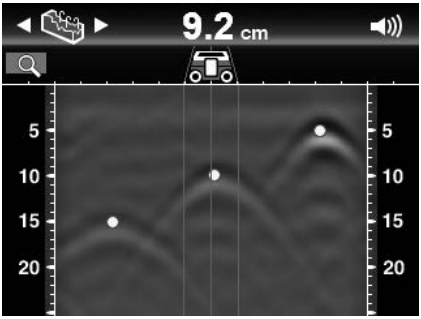

7. Make markings at the detected iron bar locations. (See page 34.)

Searching for wiring resin pipes in concrete

- Scan mode: Multi Detection (*)
- Scene: Dry Concrete

(*) For wiring resin pipes, which are often meandering unlike iron bars, it is recommended the Multi Detection mode which can scan three lines be used.

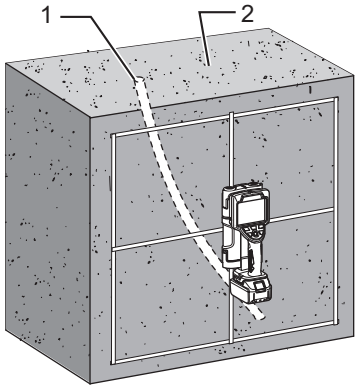

1. Resin pipe
2. Concrete

1. Place masking tape to the concrete surface to show scan lines in a square shape of 60 cm (23 5/8").

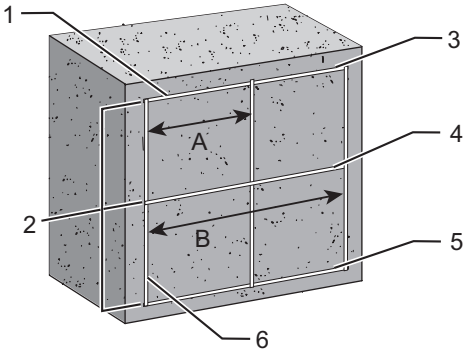

1. Masking tape
2. Three lines to be scanned
3. Upper line
4. Middle line
5. Lower line
6. Operation start line

A: 30 cm (11 13/16")
B: 60 cm (23 5/8")

2. Turn on the scanner.
   If the scanner has already been switched on, press the mode button ( ).

3. Select the scan mode of “Multi Detection” and press the apply button (◎).

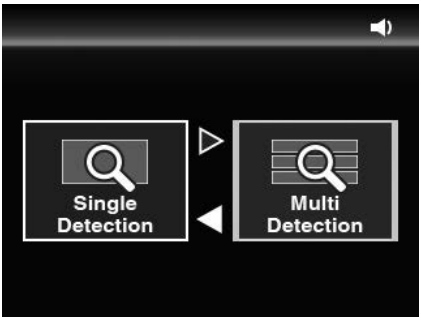

4. Select the scan mode of “Dry Concrete” and press the apply button (◎).

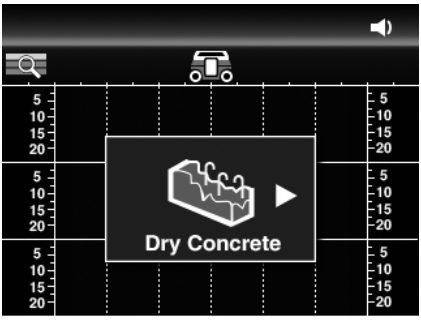

5. Align the guide laser (the sensor's right and left edge lines) with the upper masking tape line, and slowly move the scanner on the line.

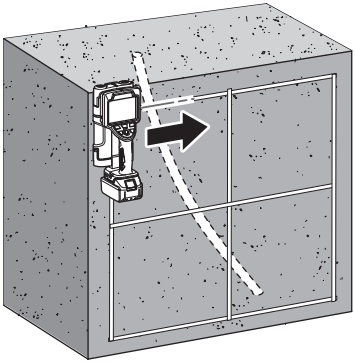

6. Scan results are shown on the display. The scan results of the “upper line” are shown in line 1 if the scanner is released from the concrete surface.

*If the apply button is pressed, the scan of line 1 is reverted so that you can start over a scan again.

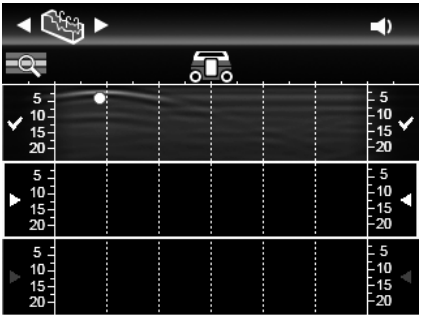

7. Align the guide laser (the sensor's right and left edge lines) with the middle masking tape line, and slowly move the scanner on the line.

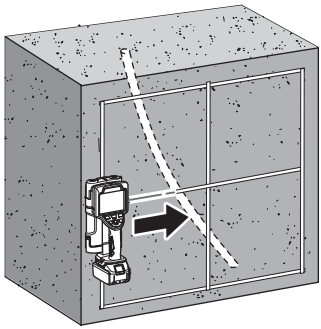

NOTE

- Start scanning on the vertical masking tape line so that the starting position of scan can be aligned with that of the upper line.

8. Scan results are shown on the display. The scan results of the “middle line” are shown in line 2 if the scanner is released from the concrete surface.

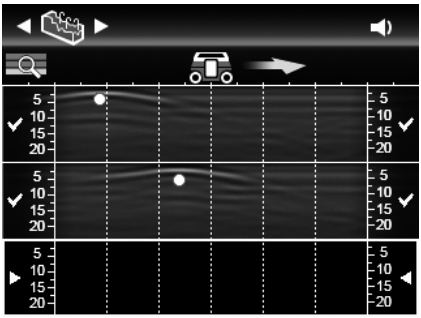

9. Align the guide laser (the sensor's right and left edge lines) with the lower masking tape line, and slowly move the scanner on the line.

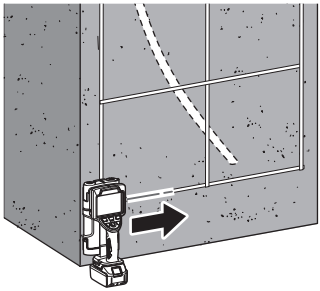

NOTE

- Start scanning on the vertical masking tape line so that the starting position of scan can be aligned with that of the upper line.

10. Scan results are shown on the display. The scan results of the “lower line” are shown in line 3 if the scanner is released from the concrete surface.

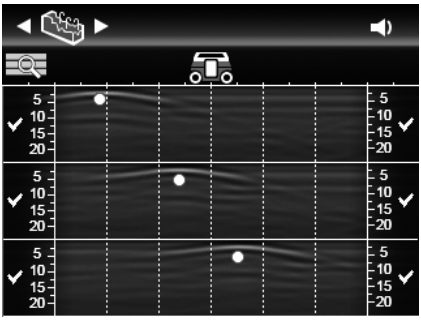

- Resin pipes, which in many cases are not straight but are meandering, give often their scan results as marks located at differing positions and depths depending on each line.

11. You can recheck scan results and the locations of buried objects if the scanner is moved again from the position at which scan operation was started.
- The screen (three lines) is scrolled in step with the movement of the scanner.

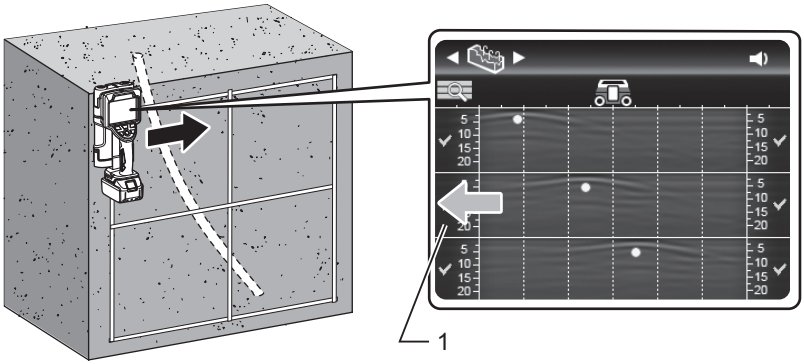

1. The scan result screen is scrolled in the direction of the arrow if the scanner is moved as shown at left.

NOTE

- When you check scan results, apply the scanner to the same place as the starting position of the executed scan. If the starting position is misaligned, the correct position cannot be checked.

12. Make markings at the detected resin pipe locations.

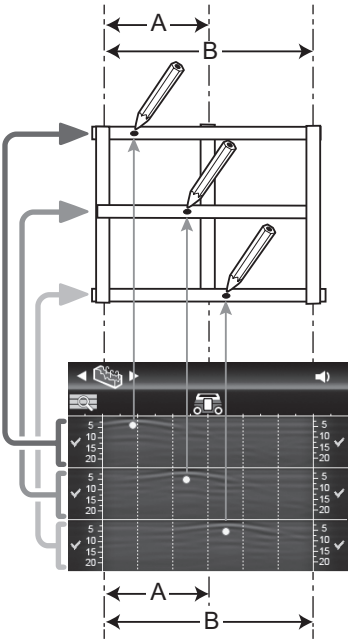

A: 30 cm (11 13/16")
B: 60 cm (23 5/8")

*It helps you identify the position of the buried object more easily if you scan also in the vertical direction with the scanner oriented perpendicularly.

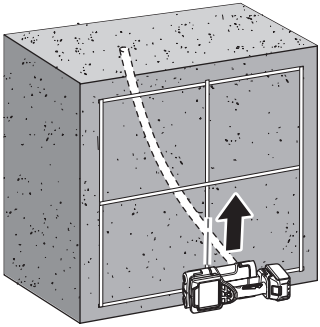

Searching for a pillar behind a gypsum board

- Scan mode:Single Detection
- Scene:Partition

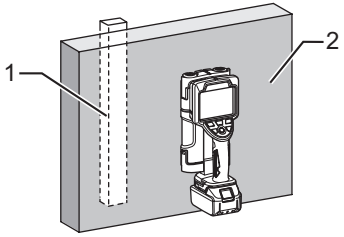

1. Pillar
2. Gypsum board

1. Turn on the scanner.
   If the scanner has already been switched on, press the mode button ( ).
2. Select the scan mode of “Single Detection” and press the apply button ( ).

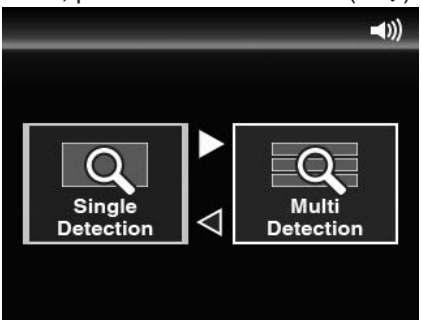

3. Select the scan mode of “Partition” and press the apply button ( ).

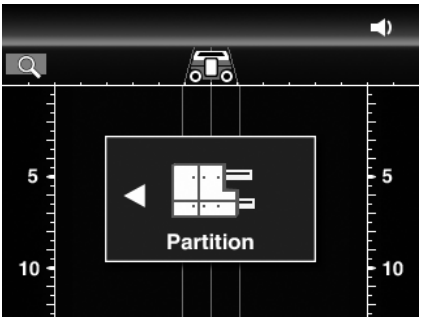

4. Align the guide laser (the sensor's right and left edge lines) with your intended scan position, and apply the scanner to the gypsum board.
5. Move the scanner slowly side to side on the partition's surface.

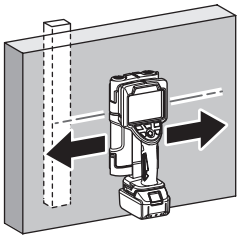

6. Scan results are shown on the display.

   - In the case of a wooden pillar behind a gypsum board, the depth may not be shown.

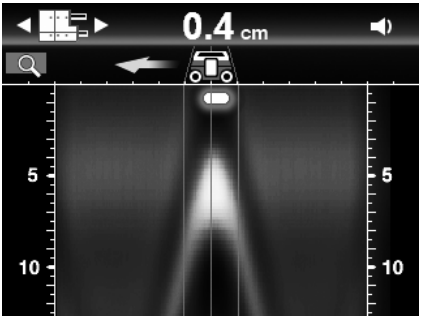

7. Make markings at the detected pillar locations. (See page 34.)

NOTE

- Detection may be instable when the scanner has just been started up. To stably detect buried objects, wait for a while before you start scan operation. Confirm scan results after several times of scan.
- Depending on the material used for the pillar behind the gypsum board, detection marks may appear narrower in width. In addition to scan results, see other information such as architectural drawings.

Searching for iron bars in a block fence

- Scan mode:Single Detection
- Scene:Radar View

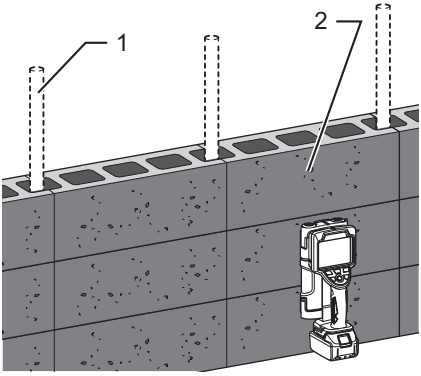

1. Iron bar
2. Block fence

Block fences
Block fences generally have a structure as shown at right.
Iron bars are placed between blocks, and mortar is filled around each iron bar.

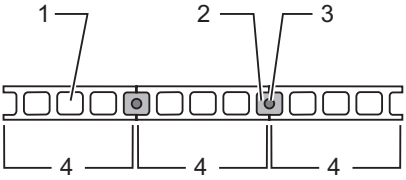

1. Void
2. Mortar
3. Iron bar
4. Block

In this example, use the scene of “Radar View” to be able to detect both iron bars and block voids.

1. Turn on the scanner.
   If the scanner has already been switched on, press the mode button ( ).
2. Select the scan mode of “Single Detection” and press the apply button ( ).

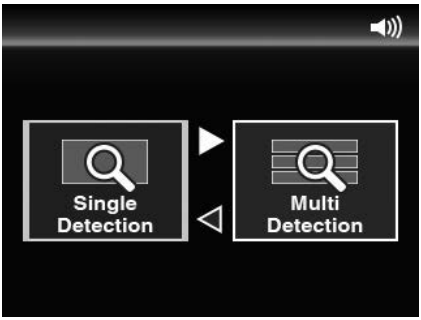

3. Select the scan mode of “Radar View” and press the apply button (◎).

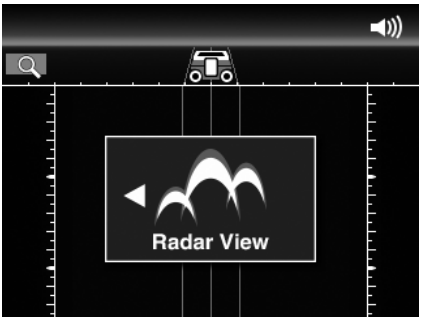

4. Move the scanner slowly side to side on the block fence's surface.

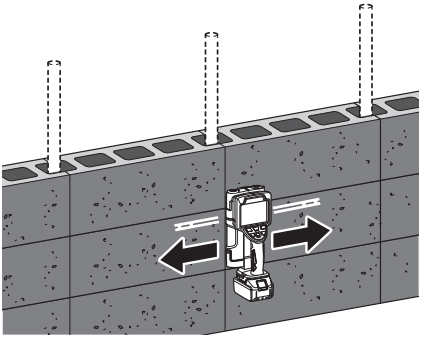

5. Scan results are shown on the display.
   Buried iron bars and voids each appear in waveforms as shown at right.
   Estimate the locations of iron bars through the characteristics and positions of the waveforms.

   Iron bar:
   Waveforms appear in deeper positions from the scan surface.

   Block void:
   Waveforms appear in shallower positions from the scan surface.

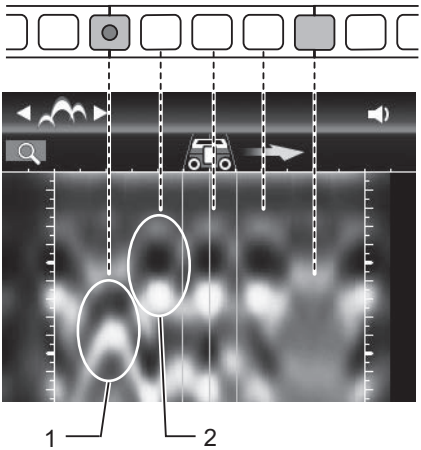

1. Iron bar
2. Block void

	Characteristically shown iron bar graphics
	Characteristically shown block void graphics

To scan better

Before scan operation

- Remove dirt, dust or iron powder, if any, on the surface to be scanned.
- Scans cannot be done correctly if the surface to be scanned is wet. Make sure the surface is dry.
- If the surface to be scanned has large projections, they may interfere with the scanner's scan operation.

To scan more accurately

- If masking tape or such is used on the scanning path, it serves as a scanning aid, for example, by giving you a guide mark to help you move the scanner more accurately or giving a guide mark when you make markings for the estimated locations of buried objects.
- The illumination of the guide laser helps you scan correctly by giving you a guide mark to move the scanner straight.

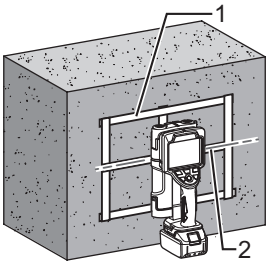

1. Masking tape
2. Guide laser

Operation in dark places

Turn on the light when you scan in dark places.

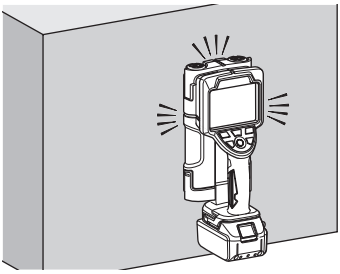

Locations of buried objects

The top of a parabolic form waveform represents the surface of the buried object.

When the scene is set to “Dry Concrete” or “Wet Concrete,” burial detection marks appear all in the same size irrespective of the width of each buried object.
When the scene is set to “Partition,” an oval mark corresponding to each width appears.

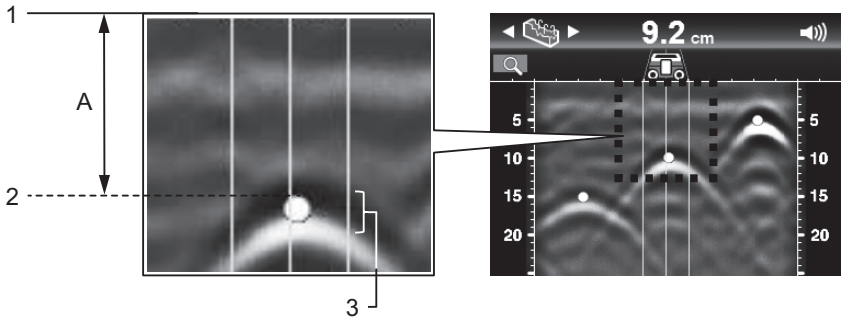

1. Surface being scanned
2. Upper surface of an iron bar
3. Black band

A: 9.2 cm (3 5/8")

Burial detection marks may appear in misaligned positions due to the effects of concrete honeycombs or other irregularities in concrete.
In that case, estimate the correct location from the waveform in the image.
In the image as shown in the right example, point (a) is the correct location.

When a yellow marker does not appear as well, the estimation may be possible from the image.

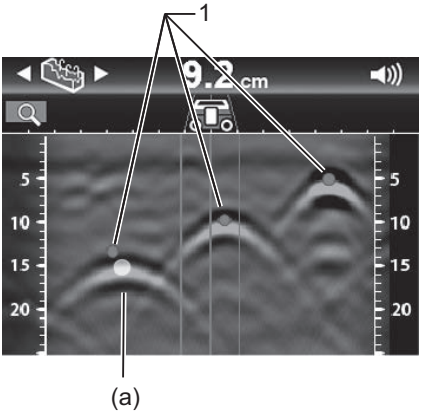

1. Burial detection mark

When adjacently buried objects are detected

When buried objects are adjacent to one another, they may not be shown as independently individual single objects.

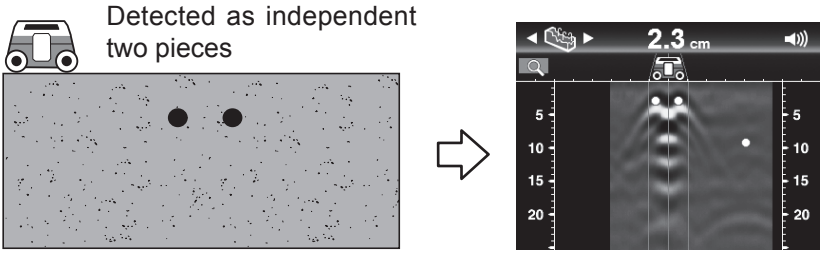

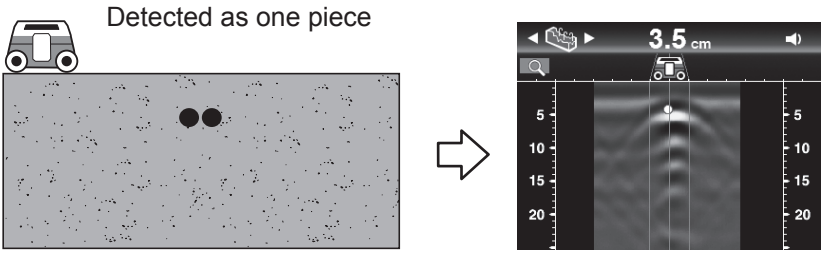

NOTE

- In the case of the selection of an excavation or boring place, allow the scan starting position to have a good distance from the detected place.

Scan direction

The detection accuracy is the highest when the buried object and the scanner are positioned in parallel.

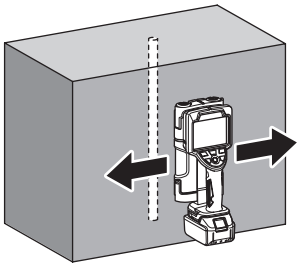

The correct detection may be prevented when the buried object and the scanner are not positioned in parallel.

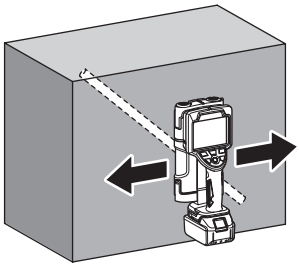

When how iron bars are placed in concrete is unknown, scan in more than one direction.

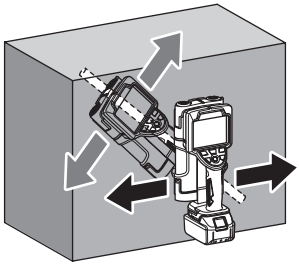

The correct detection may be prevented when the buried object is right in front of the scanner and in parallel to the scan direction.

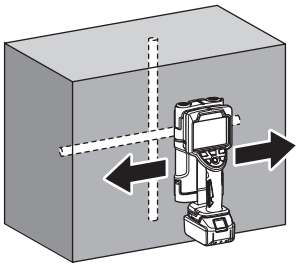

In that case, scan at more than one position.

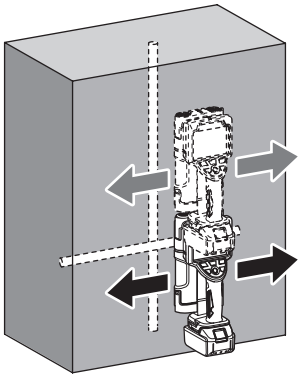

Protective functions for the scanner and the battery

When the scanner is being used, if any of the following protection functions is triggered, an error screen shown at right is displayed. This is caused by the protection function and is not a sign of malfunction.

Protection function	Error display
• Temperature error (high/low) When the scanner is hot (cold), during which the correct scan is prevented, the message shown at right appears and the scanner is forced to turn off. • Turn on the power under a temperature environment within the scanner's specification.	
• Temperature error (sudden change) When the scanner has a sudden temperature change, during which the correct scan is prevented, the message shown at right appears and the scanner is forced to turn off. • Turn on the power under a temperature environment within the scanner's specification.	
• Internal error When the scanner detects an internal processing error, during which the correct scan is prevented, the message shown at right appears and the scanner is forced to turn off. *If this screen is displayed, contact a dealer or a Makita sales office to make a repair request.	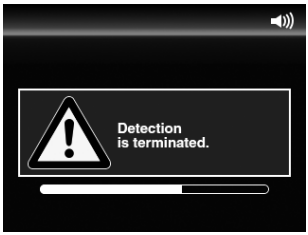
• Wheel slip protection function When there is an error in wheel turn detection, during which the correct scan is prevented, the message shown at right appears and prompts you to correct your operation.	

• Speed excess protection function When your operation is too fast, during which the correct scan is prevented, the message shown at right appears and prompts you to correct your operation.	

⚠WARNING

Always be sure that the tool is switched off and the battery cartridge is removed before attempting to perform inspection or maintenance.

Care of the product

- Wipe the product clean using a dry cloth or a cloth with a diluted neutral detergent.

NOTE

- **Never wash the product with water.**
  The entrance of water inside the product may cause a malfunction.
- **Never use gasoline, benzine, thinner, alcohol or the like.** Discoloration, deformation or cracks may result.

To maintain product SAFETY and RELIABILITY, repairs, any other maintenance or adjustment should be performed by Makita Authorized or Factory Service Centers, always using Makita replacement parts.

Makita Europe N.V. Jan-Baptist Vinkstraat 2,
3070 Kortenberg, Belgium

Makita Corporation 3-11-8, Sumiyoshi-cho,
Anjo, Aichi 446-8502 Japan

www.makita.com