mediacell

the intelligent *wireless edge*

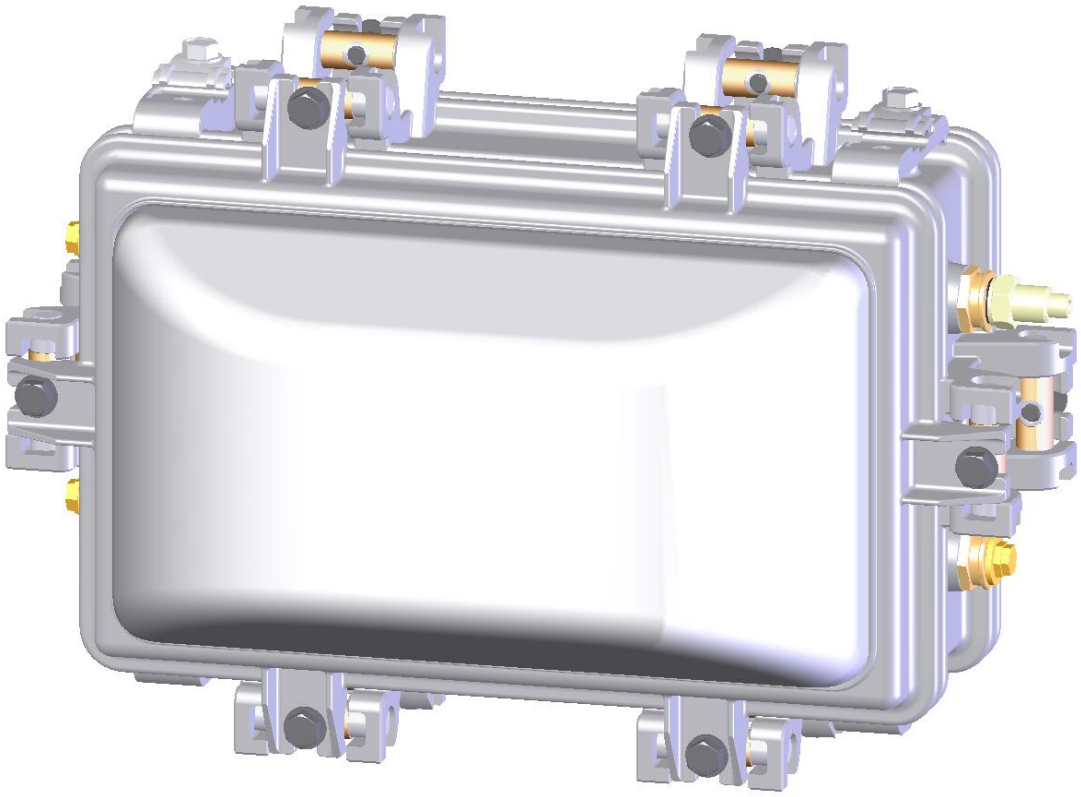

MediaCell WirelessTap™

Strand Mount Platform

Quick Start Guide

Document Version:	1.00
Date	12/6/05

FCC Notice:

NOTE: This equipment has been tested and found to comply with the limits for a Class A digital device, pursuant to part 15 of the FCC Rules. These limits are designed to provide reasonable protection against harmful interference in when the equipment is operated in a commercial environment.

This equipment generates, uses and can radiate radio frequency energy and, if not installed and used in accordance with the instruction manual, may cause harmful interference to radio communications. Operation of this equipment is a residential area is likely to cause harmful interference in which case the user will be required to correct the interference at his own expense.

The user is cautioned that changes or modifications not approved by the Manufacturer could void the user's authority to operate the equipment.

Note to Installer: This system must be professional installed in a fixed location at least 20 cm from the user. No user serviceable parts in this product.

Table of Contents

Overview 4
Housing 4
Ports and Connectors 5
  Power Supply and Pin Connector Side 5
  Media Side 6
  Side View 7
Installation Preparations 8
  Strand Clamps 8
  WirelessTap Placement 9
Installation Process 10
  Option A – Directional Coupler or Power Passing Tap: 10
  Option B – Hard-line Cable Connection: 11
Opening the WirelessTap 13
Radio Interface 14
Transport Interfaces ("Backhaul") 14
Ethernet Transport 14
DOCSIS Transport 14
Alternative Transport Technologies 15
Ethernet Transport as a Local Loop Network Interface 15
WirelessTap Powering 15
Local Console Interface 15
Boot Firmware Source 16
Initial Testing 16
Transport Interface Testing 17
Mounting and Environmental Considerations 17
Condensing Moisture 17
Grounding 17
Antenna Gain 17
Radio Path Engineering 18
Specifications 19
Legal Notices 20
Contact Information 20

Overview

MediaCell's WirelessTap products are Multi-Channel Spatial Division Multiplexed Multiple-Input / Multiple-Output Wireless Edge Server and Router systems, or MC-SDM/MIMO for short. Besides the advanced wireless, server, and router capabilities, each WirelessTap has three types of Transport Interfaces, sometimes called Backhaul Interfaces.

In typical applications the wireless interfaces are connected to antenna arrays and used for local loop user connections to data sources such as private computer networks and the Internet. The Transport, or Backhaul, interfaces are used to connect the WirelessTap to the core network itself.

Housing

The WirelessTap is furnished in an aluminum housing that protects the internal electronics and dissipates internally generated heat. The aluminum housing is weathered sealed and has internal wire mesh rf gasket.

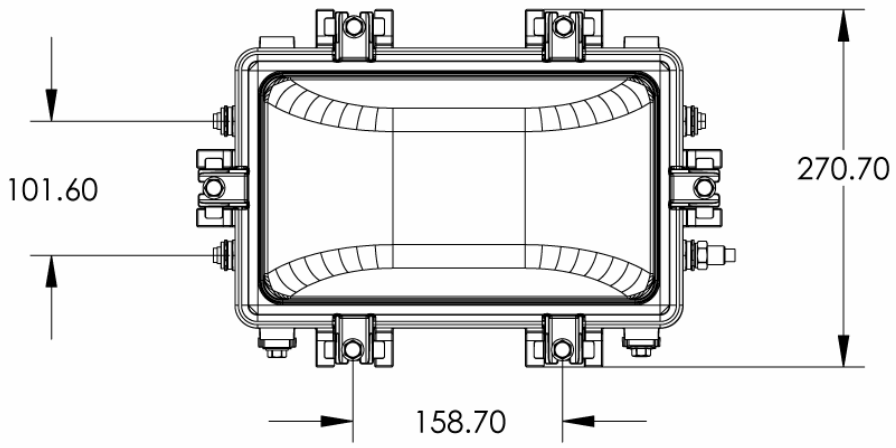

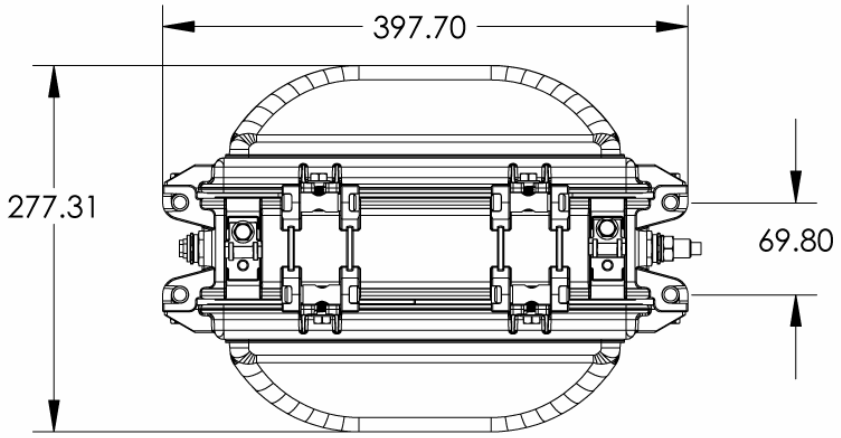

Dimensions are in millimeters.

Ports and Connectors

Power Supply and Pin Connector Side

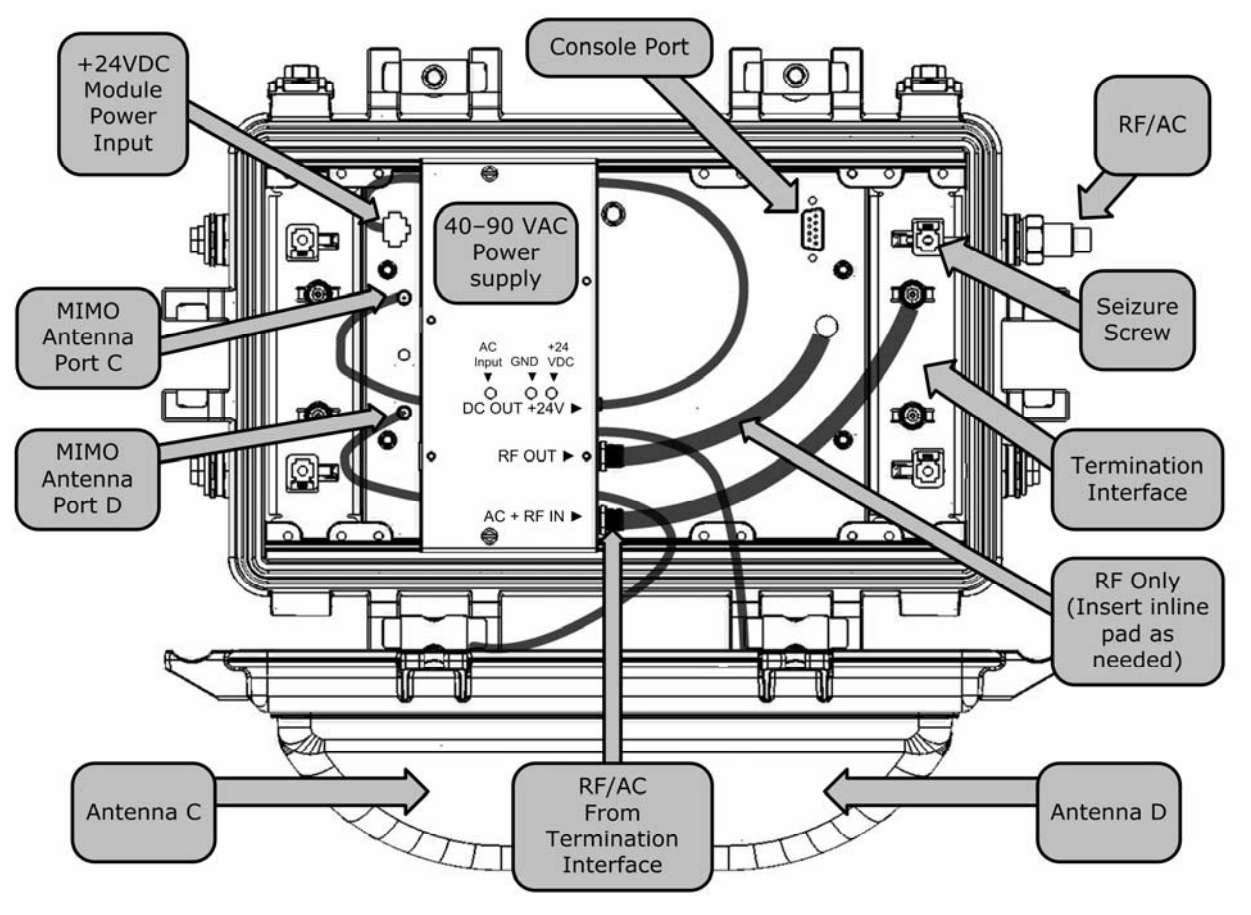

Media Side

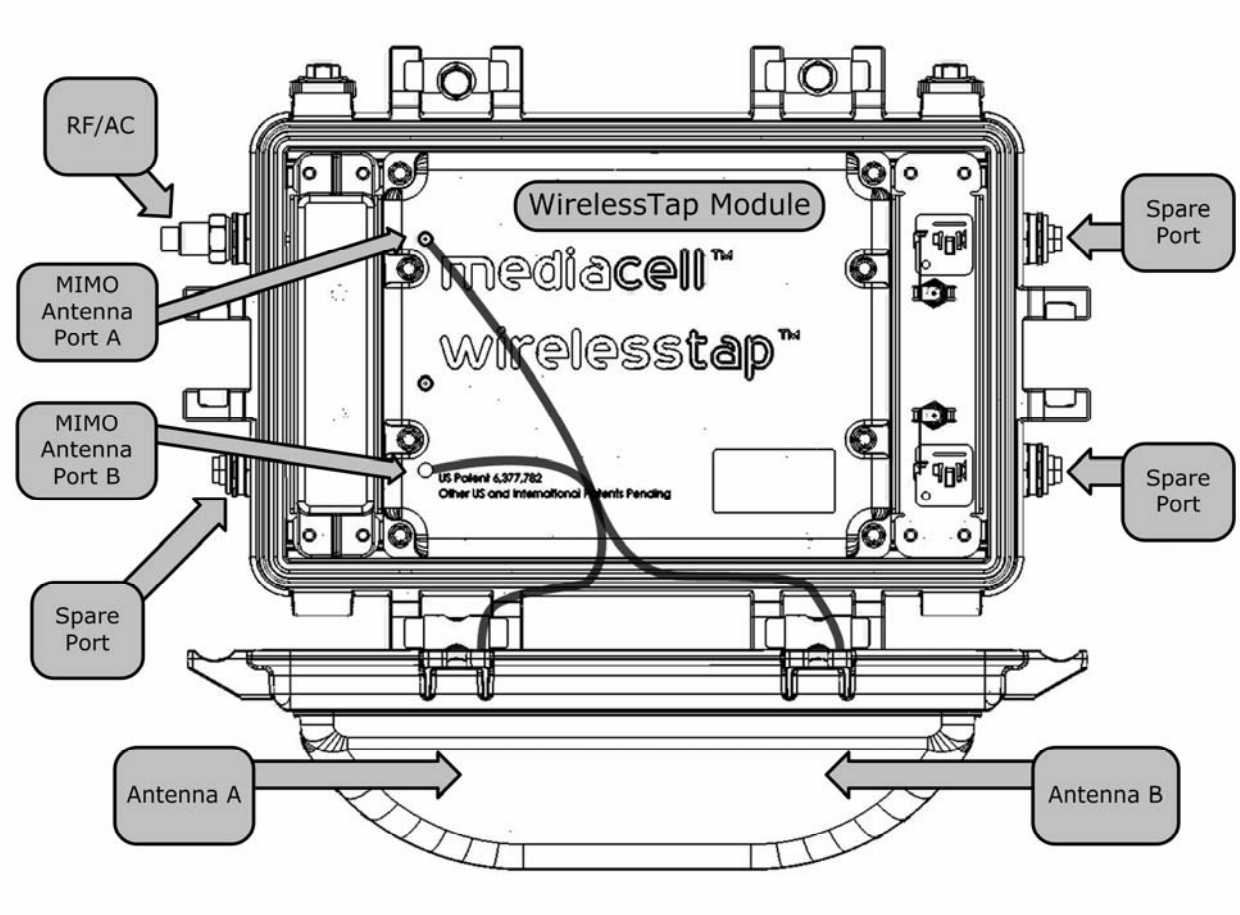
RF/AC
MIMO Antenna Port A
MIMO Antenna Port B
Spare Port
Antenna A
WirelessTap Module
mediacell™
wirelesstap™
US Patent 6,377,782
Other US and International Patents Pending
Spare Port
Spare Port
Antenna B

Side View

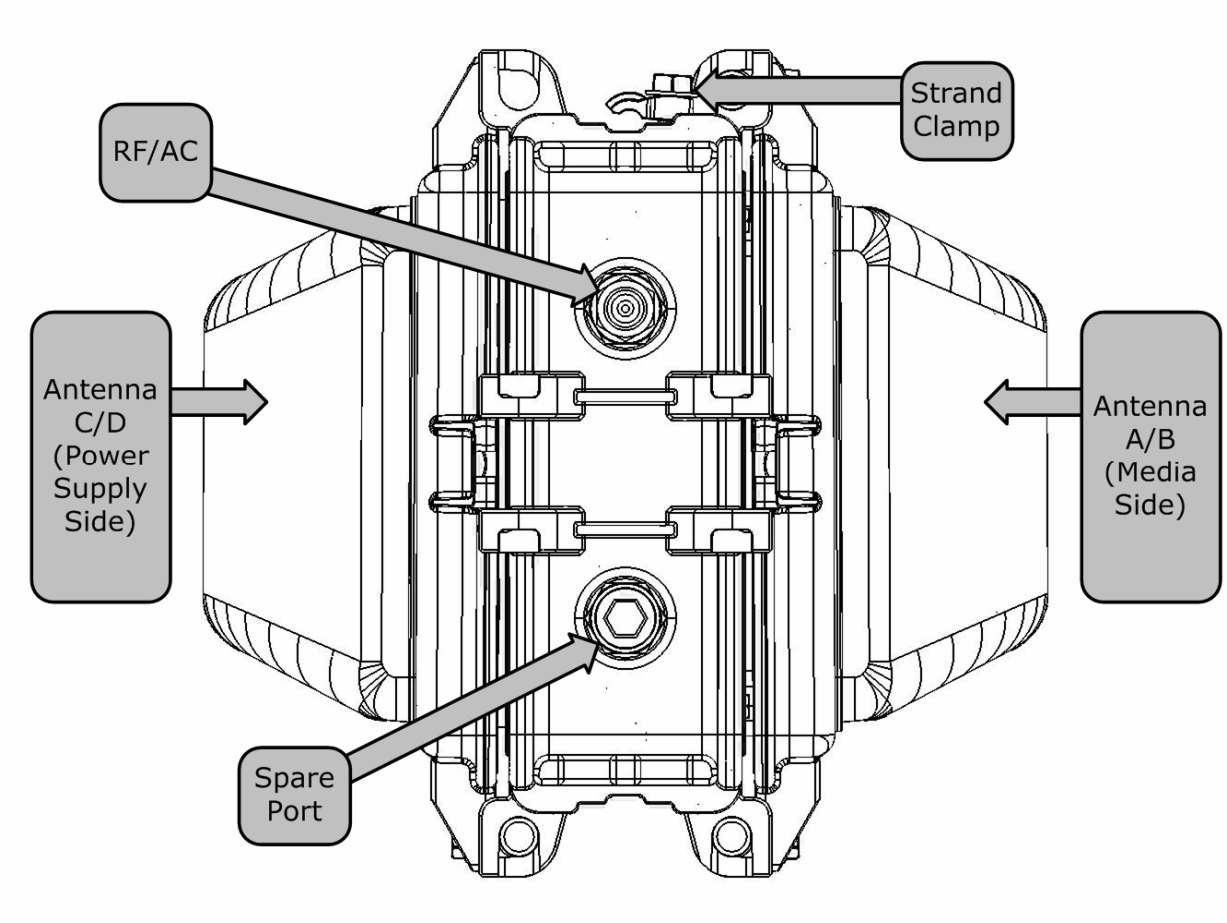
Strand Clamp
RF/AC
Antenna C/D (Power Supply Side)
Antenna A/B (Media Side)
Spare Port

Installation Preparations

Strand Clamps

The Stand Mount WirelessTap is easily installed on either 3/8”, 1/4” or 5/16” cable strand of existing aerial cable plant. The WirelessTap is attached to the strand with to *strand clamps* located at the ends of the top of the WirelessTap (see illustration below). Loosen or remove each *strand clamp* to position the cable strand within the rounded channel and tighten then *strand clamp* over the cable strand.

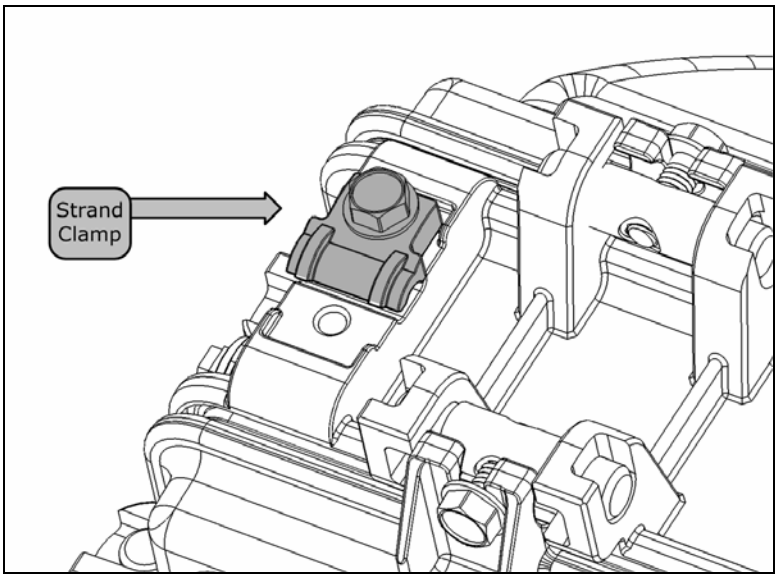

Install Torque for Strand Clamp			
Description	Bolt	Install Torque	
		kg-cm	In-lb
Strand Clamp	5/16-18	40 - 55	34.65 – 47.64

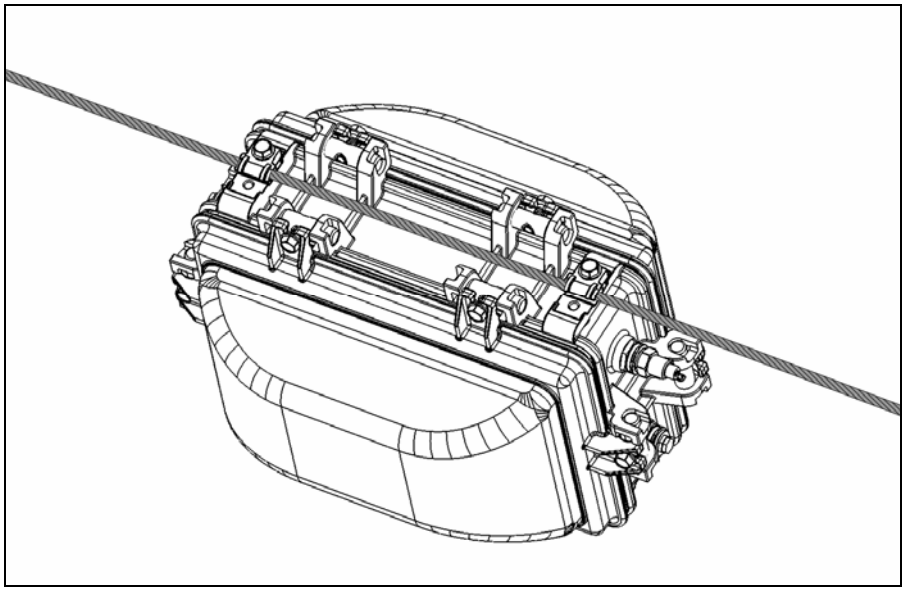

WirelessTap Placement

For the optimal installation point for an aerial WirelessTap, install the WirelessTap according to your normal amplifier construction practices.

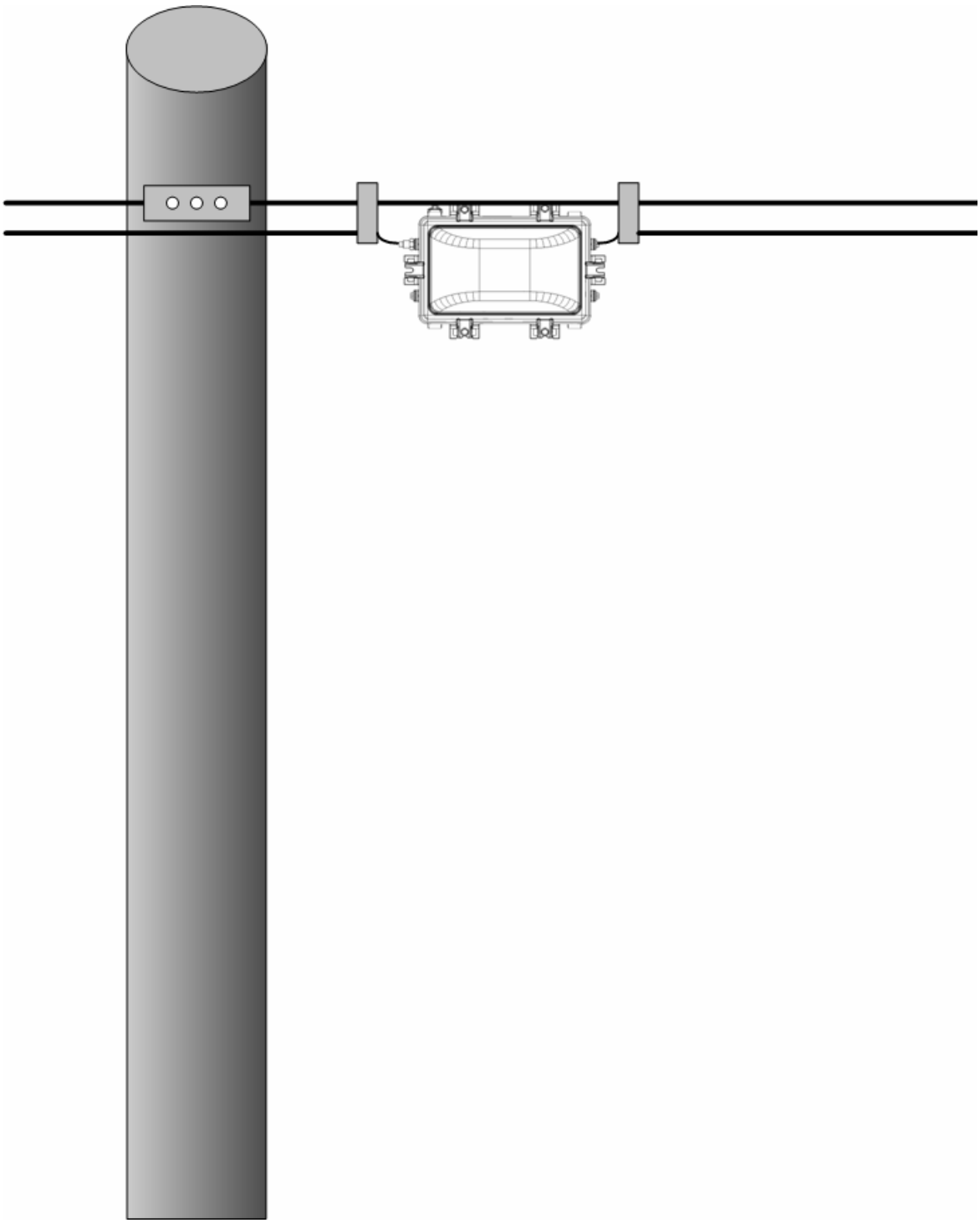

Installation Process

Cable connections to the WirelessTap are made using *standard F-connector* to the *RF/AC Input Port* on the WirelessTap.

To install the WirelessTap:

1. Remove AC power from feed cable before proceeding.
2. Mount the WirelessTap to the strand and torque the strand clamps to the correct torque.
3. There are two methods to connect to the power passing tap based on if you are using a 1) directional coupler or power passing tap or 2) using hard-line cable.

Option A – Directional Coupler or Power Passing Tap:

i. When using drop cable from a directional coupler or power passing tap, prepare standard F-Connector jumper and attach to the WirelessTap ***first*** and attach to the appropriate feed port on the directional coupler or power passing tap.

ii. Weather proof according to your cable system specifications. Insure that there is a proper drip loop formed on the F-Jumper.

iii. Re-Apply power to the F-Jumper.

Option A Connection Illustration:

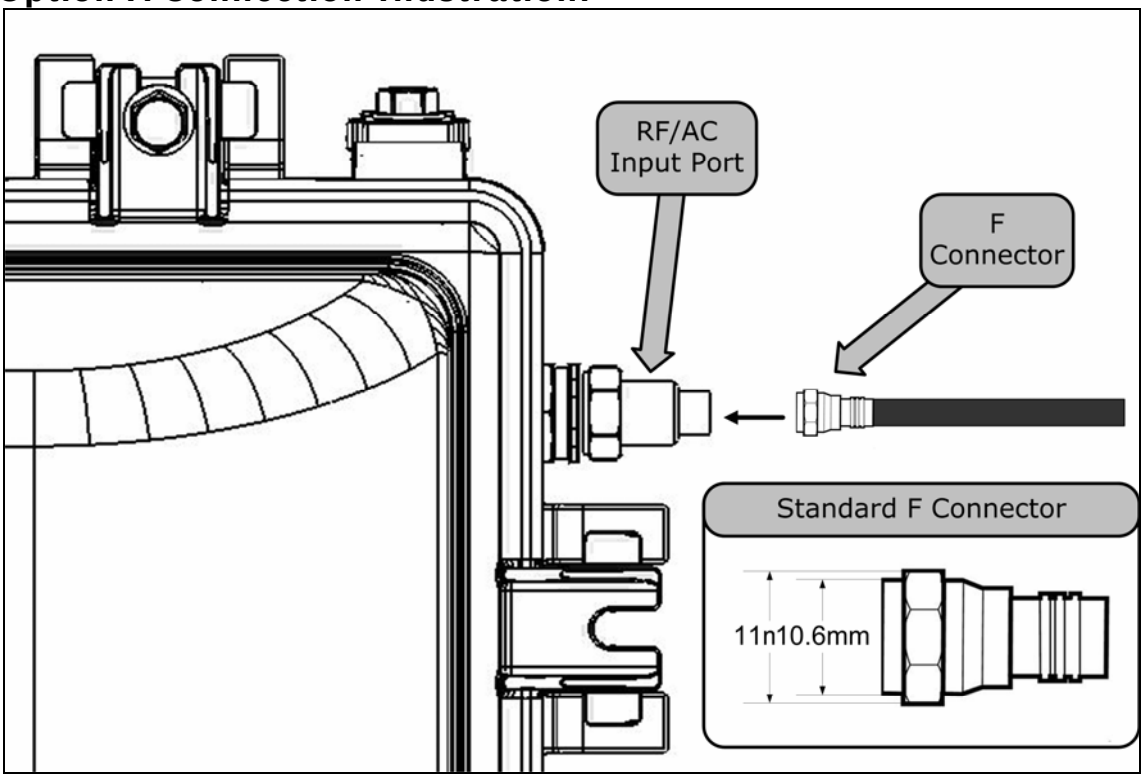

Option B – Hard-line Cable Connection:

i. This option requires the use of a standard pin-type trunk connector with a nominal center-conductor diameter of 0.067inches.

ii. Loosen the bolts on the Power Supply side in the correct sequence to access internal components. (See section Opening the WirelessTap).

iii. Remove the installed center-conductor from WirelessTap by loosing the seizure screw with a Phillips-head screwdriver and then unscrew the center-conductor to remove it from the WirelessTap.

iv. Prepare the hard-line cable and pin fitting according to your construction practices.

v. Terminate in the pin connector in the *Input Port and* tighten the seizure screw to the correct torque.

vi. Weatherproof according to your construction practices.

vii. Reapply System Power

See Option B Illustrations on Next Page

Install Torque for Seizure Screw			
Description	Screw	Install Torque	
		kg-cm	In-lb
Input Port Seizure Screw	8-32*12	10 - 15	8.66 - 13

Option B: Part 1 - Remove Installed Conductor

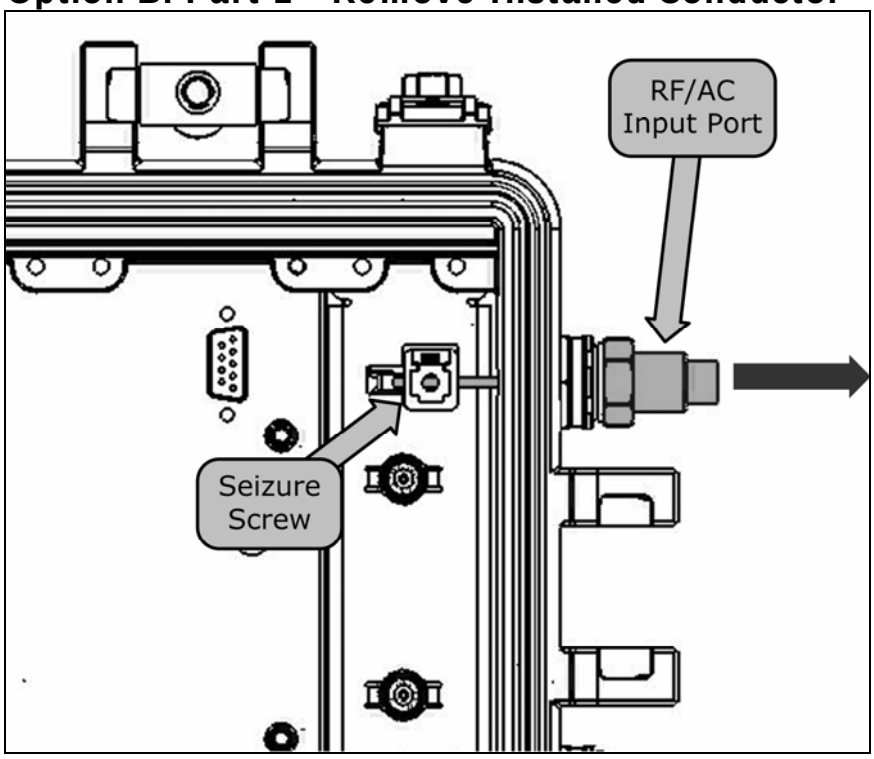

Option B: Part 2 - Insert Hard-line Cable Trunk Connector

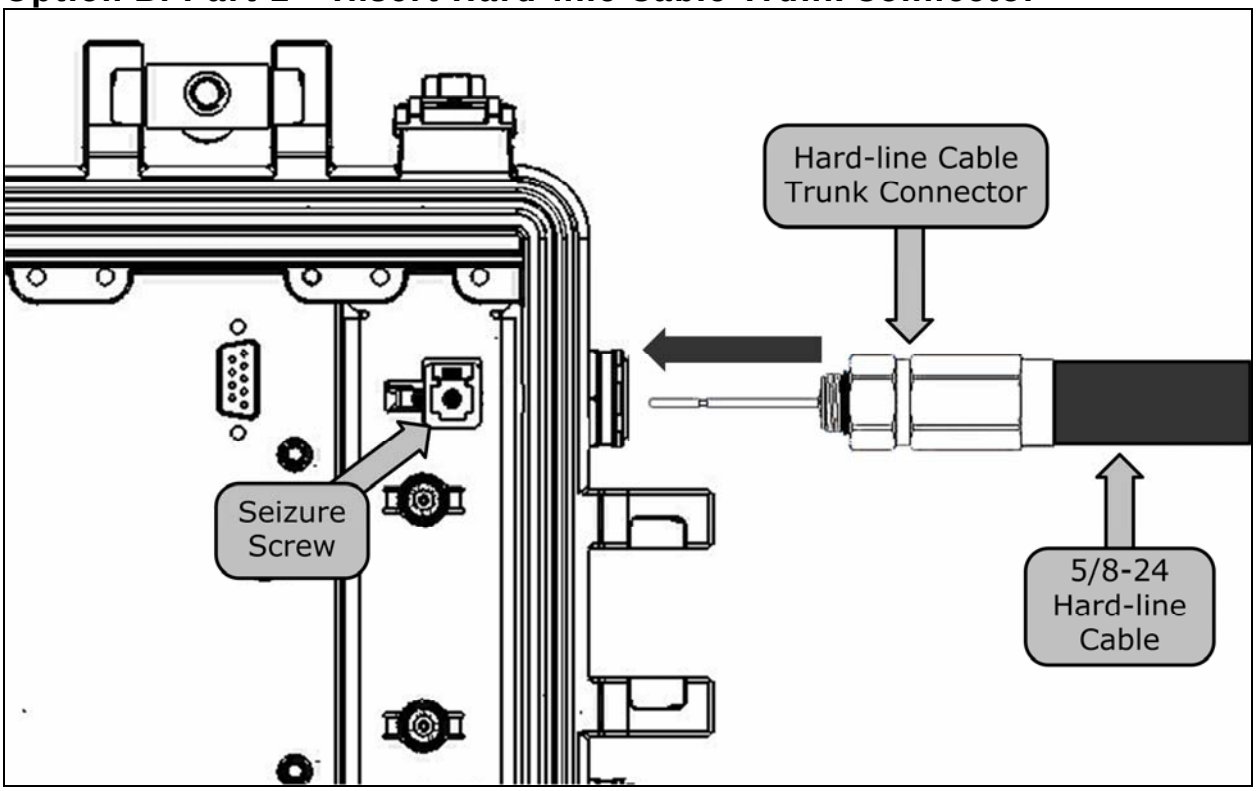

Opening the WirelessTap

To open either the Media Side or Power Side of the WirelessTap, loosen the six bolts that connect each side. This will release the pressure on the gaskets. The proper sequence to loosen the bolts is illustrated below, starting with #1 and finishing with #6.

To access the internal components on either side, only slightly loosen screws 1 & 5 to act as a hinge and loosen 2,3,4,6 screws to a point that they can rotate out to release the side.

When closing and resealing each side, tighten the bolts in reverse sequence to the correct torque.

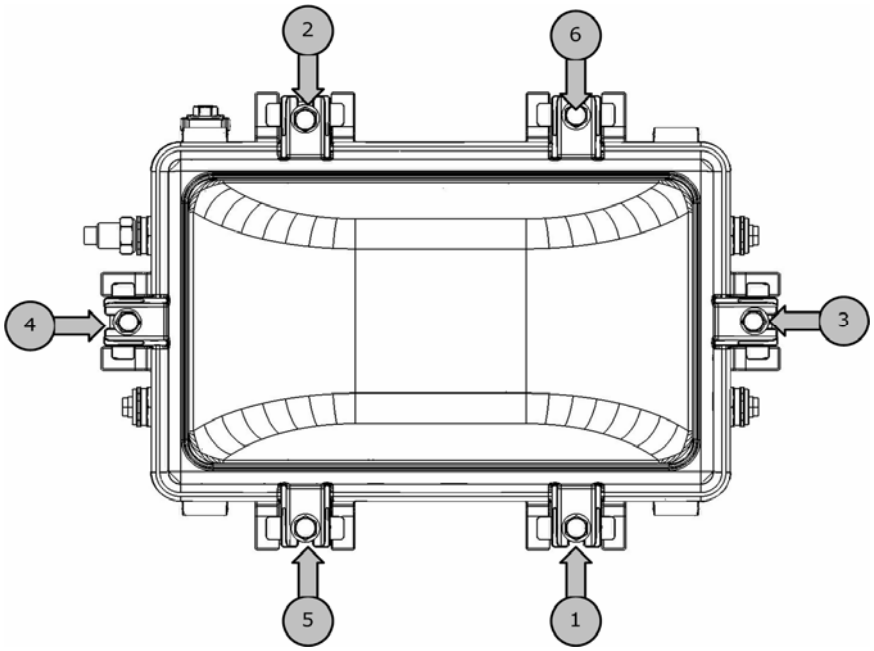

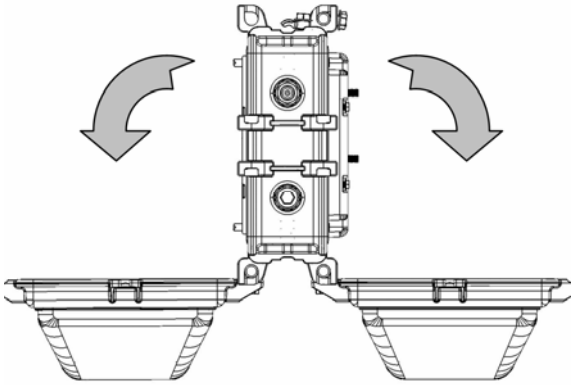

Install Torque for Hinge Bolts			
Description	Hinge Bolt	Install Torque	
		kg-cm	In-lb
Side Screw	5/16-18	40-55	35 – 47

Radio Interface

A radio interface operates on a single channel. Assuming the interface is 802.11g, the channel is numbered 1 to 14 and is spaced on a 5MHz comb. Channel 1 is centered at 2.412GHz and Channel 14 is centered at 2.477GHz. Each radio channel is approximately 20MHz wide. While it is generally believed that channels cannot operate "overlapped" this is not strictly true. It may impact maximum throughput per radio on a theoretical basis, in a practical application with sectorized antenna distribution this is not a material concern. But it is something to keep in mind when selecting channels and placing antennas. Indeed, not all channels are allowed in all jurisdictions.

Radios can be placed in "Fixed" mode (single antenna), disabling the Diversity functionality, or the ports will automatically switch between the two outputs searching for and communicating with other wireless clients. Factory preset is Diversity (MIMO) mode. Fixed Mode is usually used for single antenna point-to-point links where dual antennas are undesirable (but most point-to-point links will do better with diversity using dual antennas).

Transport Interfaces ("Backhaul")

Each WirelessTap can be configured to use a number of different transport interfaces. The two most common are HFC DOCSIS (an RF interface usually found in cable telecommunications networks), or standard 10/100TX Ethernet.

Ethernet Transport

Connecting to Ethernet backhaul transport is as easy as connecting an RJ45 Ethernet CAT5e type cable to a network (MDI). Both 10Mbps and 100Mbps speeds are fully supported. On cabinet mount WirelessTaps Ethernet is always available

DOCSIS Transport

If your WirelessTap has a DOCSIS 2.0 modem, there will be a 75Ω F-female port available. RF input is 0dBmV +/-10dB at the data carrier. The interface will either be US format or EU format, but not both.

Upstream carrier is capable of:

QPSK	+8 ~ +54
S-CDMA	+8 ~ +55
8/16QAM	+8 ~ +53
32/64QAM	+8 ~ +58

Alternative Transport Technologies

There are a variety of specialty transport options, ranging from fiber interfaces to high-speed non-DOCSIS RF interfaces, DSL interfaces, and even wireless backhaul. With the exception of wireless, these specialty interfaces are usually accomplished through external converters attached to the Ethernet interface or they must be factory installed.
Regarding the wireless backhaul operation, this can be configured via software. Any of the local loop wireless radios can be assigned to be the transport interface. Please see the *Systems Administrator Guide* for more detailed configuration information. Regarding the installation in such an application, any point-to-point/multipoint antenna scheme can be used, but you will need to carefully record which interface you've used (any are suitable) and whether you are using diversity or single/fixed mode, and the latter case, which port you have connected to the antenna.

Ethernet Transport as a Local Loop Network Interface

Just as any of the wireless interfaces can be used as a transport backhaul interface, the Ethernet interface can be used as a local loop wired Ethernet interface. This, as with the wireless transport configuration, is achieved via software configuration. Please refer to the *Systems Administrator Guide* for more detailed configuration information.

WirelessTap Powering

The strand mount WirelessTap has only one option for powering: 40-90VAC Coaxial Cable powering.

Power consumption is typically 14-18W depending on options and radio duty cycles, but is 25W maximum.

Coaxial Cable powering is generally used in conjunction with a DOCSIS modem interface, but it can be used in any configuration, including wireless and Ethernet backhaul deployments. Coaxial powering requires a 40-90VAC 47-63Hz quasi-squarewave power source.

Local Console Interface

There is a standard 9pin D-type connector provided for local console access using a terminal or computer running a terminal emulation application. To connect, you will need a "Null Modem" cable. The interface settings are 115.2Kbaud, No Parity, 8 Bit, 1 Stop Bit. ("**115.2K N81**").

Depending on when you connect in the runtime cycle you may see the full boot messages (if you connect during boot time), or you may see a login prompt. You will not be able to change any settings without a username and password and properly log in. Please contact your Network Administrator for access credentials.

As a special note, only BIOS settings are persistent. Any changes made to running configurations can be reset to default simply executing the reboot command from a logged-

in session prompt (with proper permissions) or simply power-cycling the WirelessTap. In the latter case, it is best to wait three seconds or so before re-applying power to make sure that the power supply sufficiently discharges and will fully accomplish a hardware power-on reset.

Boot Firmware Source

WirelessTaps may come with a local firmware option installed. In this case, runtime firmware is stored in non-volatile memory, and the WirelessTap can function without a backhaul interface. This generally not useful, and is seen mostly in demonstration and evaluation systems. There are some applications that do use this feature but they are relatively rare.

In any case, if you do have a WirelessTap so equipped, you may desire to monitor the boot sequence via the console port and terminal. There are boot options that you may want to select. The most common are to use the Ethernet interface as the backhaul, use the DOCSIS interface as backhaul, or use "No Network" backhaul. The first two must have DHCP available, whereas the "No Network" option does not. Please see the *Systems Administrator Guide* for more details.

Please Note: Even with the local firmware option installed, the WirelessTap is almost certainly configured to search for boot firmware via the DOCSIS Interface first, then the Ethernet Interface. If both these fail to supply a boot image, only then will local firmware will be loaded and run. Please see the *Systems Administrator Guide* for more detailed start-up information.

Initial Testing

The console port can be used to quickly check the platform's operational status. Simply connect a terminal set to **115.2K N81** using a null modem cable. If the server is running and stable you will see only a login prompt. If the unit cannot find a boot file to execute it will continually try by restarting itself every few minutes. You will be able to witness this via the console. The WirelessTap unit also beeps though it may be difficult to hear in noisy environments.

Radio testing can be accomplished in a number of ways. One is to use a specialty tester such as the *YellowJacket* handheld tester (for 802.11 systems[1]). Another is a home-brew test setup such as a laptop running *NetStumber*, *Kismet* or other such software application (using an appropriate wireless adapter). You should be able to see the radios in the display window. Please consult the appropriate guide. Beware using Windows based laptops and standard WLAN configuration utilities especially the built-in Windows subsystem, called *WZC* or *Windows Zero Config*. These, especially the WZC application, can be very misleading. Please consult the appropriate guides, but we suggest using test gear for testing purposes. Other test rigs can be used, such as vector signal analyzers, spectrum analyzers and RF power meters, but these require exceptional skill given the complex modulation and time division duplex nature of the various digital radio protocol installed in WirelessTaps.

[1] See www.brsystems.com

Transport Interface Testing

The DOCSIS interface is rather simple to test. The easiest way is to use the command line from the console port and request the PHY parameters directly, provided you are logged in with the appropriate credentials. Alternatively, this information is likely available via your CMTS and/or your provisioning system.

For Wireless backhaul, a similar method can be used to determine the connection status via the command line, again, provided you are logged in with the appropriate credentials.
In any case, if the WirelessTap is properly configured and communicating via the transport interface, all WirelessTap functionality can be managed and verified remotely either using a Secure Shell session ("SSH") or Simple Network Management Protocol commands and requests ("SNMP"). Please see the *System Administrator's Guide* for details.

Mounting and Environmental Considerations

Strand mount WirelessTaps are suitable for free air operation from –40°C to +60°C. If ambient temperature is expected to be +40°C or higher, it is best to make sure that air can flow around the WirelessTap.

Condensing Moisture

Strand mount WirelessTaps are designed to withstand direct expose to rain and snow. However, strand mount WirelessTaps are not designed for submersed operation.

Grounding

It is imperatives that proper grounding techniques be used that fully comply with local law. This is also true of the antennas themselves. The entire die-cast chassis is aluminum and should be earthed according to local regulations and common potential safety codes.

Antenna Gain

Strand Mount WirelessTaps have 4 integrated 8.5dB linear patch antennas using alternating 45 degree slant polarization.

Radio Path Engineering

It is generally acceptable to use the Free Space Path Loss Model (Friis Model) for most WirelessTap applications. Local building and construction techniques, vegetation density, population density, terrain, and WirelessTap antenna height will all matter and need to be considered on a case-by-case basis. For links in excess of 1km (1/2 mile) it may be better to use the Egli path loss model. For paths exceeding a few miles, Fresnel zone size should also be taken into consideration.

A Special Note Regarding 802.11 Achievable Ranges and Distances
Please note that as of this writing, the distance record for fully operating non-amplified 802.11 point-to-point link is 125 miles (200km). This was a specialty link, but not difficult to replicate.

MediaCell's WirelessTap technology routinely provides reliable indoor and outdoor coverage with modest antenna systems reaching 500ft (150m). Please contact our Applications Engineering department for planning assistance. Please have available details such as typical antenna height above ground, antenna specifications and cable lengths, types and density of vegetation, typical building construction, and building and site plans, especially for campus and indoor applications.

Specifications

Radio Module Format	MiniPCI Type III A
Transport Network Interface (Uplink)	10/100 Ethernet auto-sensing, plus one MiniPCI (32-bit) format WAN interface = xDSL, DOCSIS, Extended Ethernet (others available)
Wireless Network Protocols	IEEE 802.11a/b/g Custom/Proprietary Modes available
Data Rates Supported	All native IEEE 802.11 a/b/g modes
Radio Band	Unlicensed/License-free ISM/UNII/Hiperlan (IEEE 802.11a/b/g) Licensed Band options available
Wireless Network Architecture Mode	WAN Infrastructure LAN Infrastructure
Wireless Media Access Method	TDD CSMA-CA
Carrier Format (IEEE 802.11a/b/g)	OFDM or DSSS (per radio)
Modulation Format (Data Rate) Receive Sensitivity / Transmit Power Jurisdictional limits apply Figures cited for IEEE 802.11a/b/g	DSSS-DBPSK (1Mbps) -104dBm / +20dBm DSSS-DQPSK (2Mbps) -103dBm / +20dBm DSSS-CCK (5.5Mbps) -101dBm / +20dBm DSSS-CCK (11Mbps) -99dBm / +20dBm OFDM-BPSK (6 Mbps) -87dBm / +20dBm OFDM-BPSK (9 Mbps) -86dBm / +20dBm OFDM-QPSK (12 Mbps) -84dBm / +20dBm OFDM-QPSK (18 Mbps) -82dBm / +20dBm OFDM-16QAM (24 Mbps) -79dBm / +20dBm OFDM-16QAM (36 Mbps) -75dBm / +20dBm OFDM-64QAM (48 Mbps) -71dBm / +20dBm OFDM-64QAM (54 Mbps) -70dBm / +20dBm
Transmit Power Adjustment 802.11b 802.11a 802.11g	Automatically or Manually settable 0dBm to +20dBm, adjustable in ±2dB increments 0dBm to +20dBm, adjustable in ±2dB increments 0dBm to +20dBm, adjustable in ±2dB increments
Antennas	Up to 4 integrated planar, 60°H x 60°V 8.5dBi gain, up to 360° x 60° coverage Optional external connectors (N, TNC, SMA) Other options available

Security	802.1x (EAP exchanges encrypted to 3DES, AES, etc., mutually authenticated via RADIUS or LDAP) Optional GPS location-authenticated and other extensions
Local Consol Port	Internal 10/100 Ethernet auto-sensing RJ45 RS232 Serial (115.2K N81 Default)
Remote Configuration Access	SNMP, SSH (via Transport Network Interface only)
Core Processing	Transmeta Crusoe TM5900 (1GHz) 128/256MB RAM 64/128/256/512/1024MB Flash
Environmental	Strand Mount Enclosure: -40° to +60°C Weather sealed – resistant to direct exposure to rain and snow
Physical	Weather resistant Enclosure 15 x 10.6 x 10.9in (380 x 270 x 277mm) 18.4 lbs (8.33kgs)

Legal Notices

All specifications are for reference purposes only. Please contact MediaCell, Inc. directly for current specifications and clarifications. All Specifications subject to change without notice.

MediaCell, **WirelessDrop**, and **WirelessTap** are trademarked in various international jurisdictions by MediaCell Licensing Corporation.

Various US and International patents and Patents Pending apply. Please contact your local Patent Office or MediaCell Licensing Corporation for details.

All Rights Reserved.

Contact Information

MediaCell, Inc.
6950 S. Tucson Way,
Suite H
Centennial, CO 80112

Tel: +1-720-221-7692
Fax: +1-720-221-7692