LTE Ubiquitous Module®(UM04-KO)

Instruction Manual

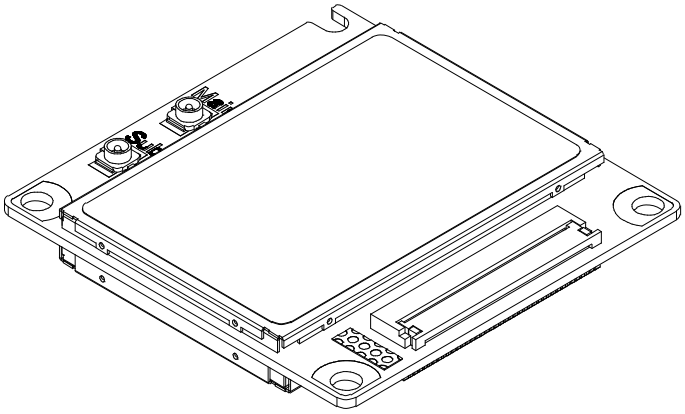

Version 1.0

August 2015

— Contents —

Introduction 3
■Dimensional outline drawing 4
■Interface for the external device 5
■Available services with this device 6
Device specification 7
Main specification 7
Interface 9
1. Main connector 9
2. Power supply 19
3. UART interface 28
4. USB interface 33
5. Monitor interface 35
6. UIM card interface 38
7. RF connector (Main/Sub) 40
8. External antenna 41
Precautions for connecting to the external device 42
Precaution for design of the external device 42
Recommended installation method 43
■In case of using the flexible connector 43
■In case of using the BtoB connector 43
■Antenna connection 44
Operation mode 45
Communication mode 45
Service function 47
Packet communication 47
SMS 49
Area Mail 49
Software update 50
RF part ON/ OFF function 50
AT command 51
AT command list 51

Introduction

Please note that “UM04-KO” is referred to as “this device” in this instruction manual.

This device is the communication module which unified in combination with the radio part of the cellular telephone and the modem part.

This device has the functions of packet communication and SMS.

As this device is built-in to the external device product, the LTE communication service (only in Japan) and W-CDMA/GSM communication service (out of Japan) can be used.

This device is an environment-conscious product which is compliant with the RoHS Directive.

■Dimensional outline drawing

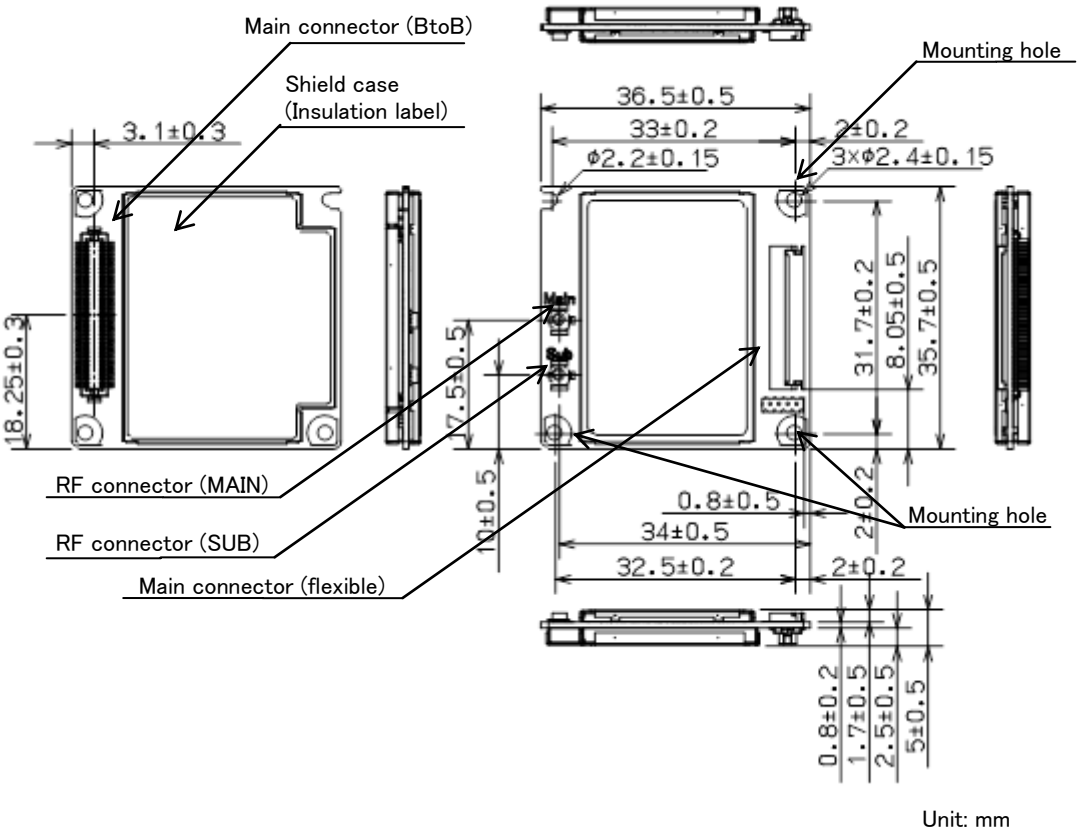

●Name plate seal outline drawing

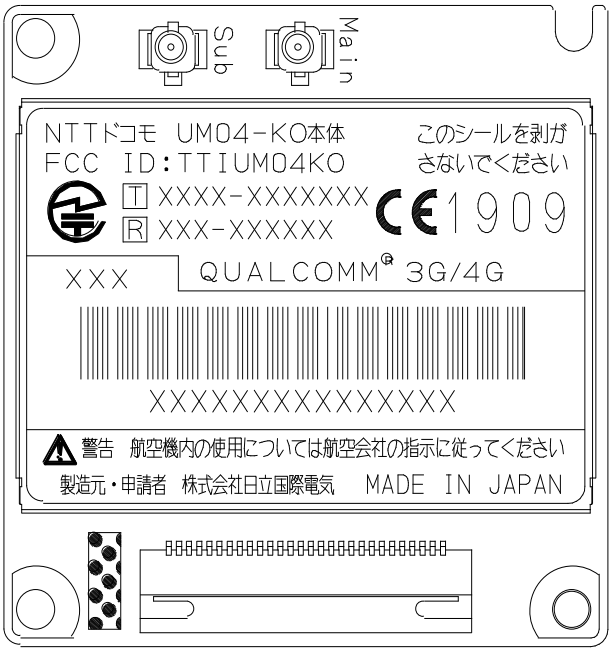

■Interface for the external device

●Interface between this device and the external device (A-side : Flexible connector)

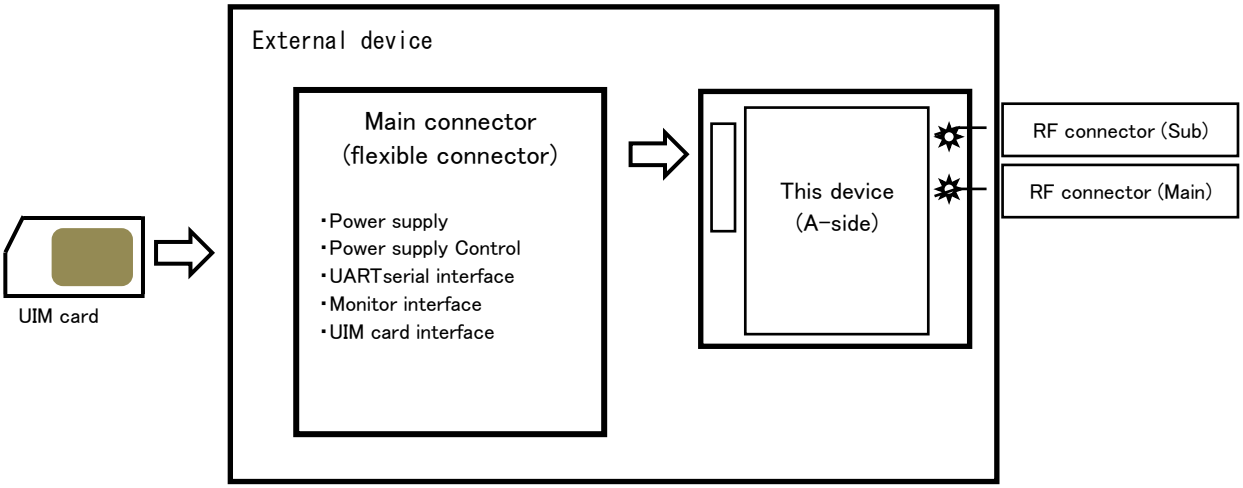

●Interface between this device and the external device (B-side : BtoB connector)

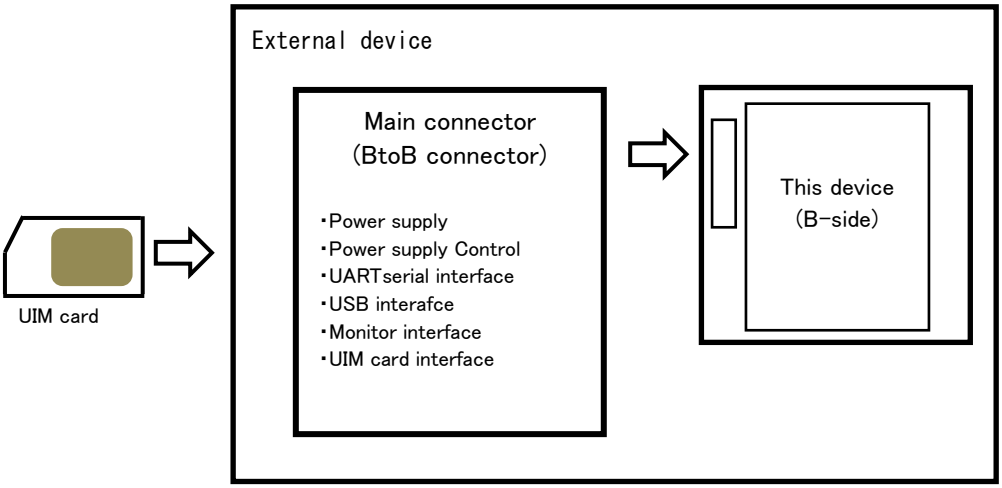

This device has two main connectors. One is flexible connector on A-side and another is BtoB connector on B-side. They each contain the interface of power supply, UART , USB (only in case of BtoB connector), UIM card. RF connectors on A-side are used to connect the external antennas.

■Available services with this device

This device can use various communication services of DOCOMO. Packet communication, SMS and other associated various services are available.

In addition, for the use of the service, production of the external device which incorporated this device is necessary.

●Packet communication

Packet communication (packet switching) is communication method that transmits and receives divided data which is partitioned into the unit of called packet (package).

Because the packet communication can use one line in common by plural external devices or applications, it can communicate efficiently.

The data communication speed is 112.5Mbps for downlink and 37.5Mbps for uplink (best effort type) in LTE network, and 42.2Mbps for downlink and 5.7Mbps for uplink (best effort type) in W-CDMA network.

●SMS

SMS (short message service) is the service that can transmit and receive the letter message of the short sentence easily with the address which is same to phone number regardless of the mobile phone career through SMS center of DOCOMO.

●Area Mail

Early warning “Area Mail” service is the service in Japan that earthquake early warning and tsunami warning from Japan Meteorological Agency and the disaster and the refuge information from the country and the regional public institution are delivered to cellphones and communication models which exist in the particular area all at once through the DOCOMO network.

Please refer to the website of DOCOMO for the regional public institution which started service of the disaster and the refuge information using Area Mail.

This device can not receive Area Mail at the place of weak radio wave.

During packet and other communication, it may receive Area Mail depending on communication situation. In addition, it can not receive the Area Mail again that it missed to receive.

The reception of Area Mail is free of charge.

●Software update

This is the function to update the software of this device in LTE network after sale.

Device specification

Main specification

Item		Description		Remarks
		LTE mode (LTE method)	Roaming mode (W-CDMA/GSM method)	
Supported service		Packet communication, SMS		—
Communication protocol		PPP, IP		—
Control method		AT command		—
UART serial interface	Number of ports	One line		—
	Signals	SD、RD、XER、XDR、XRS、XCS、XCD、XCI		—
	Communication speed (bps)	1200/2400/4800/9600/19200/38400/ 57600/115200/230400/460800		—
	Communication format	Start：1bit, Stop：1bit, Data：8bit, Parity：none		—
	Sending/Receiving control	Support hardware flow control, software flow control, and without flow control		—
	Baud rate deviation	Sending:2% or less Receiving:2% or less		—
USB interface	Communication standard	Conformity USB2.0		Supported in case of BtoB connector
	Number of ports	One line		
	Function	Device function		
	Communication speed	HS：480Mbps, FS：12Mbps		
	Signals	USB_DPLUS、USB_DMINUS、USB_VBUS、USB_D_RDY_n、USB_H_RDY_n		
RF interface	Radio frequency	2GHz/800MHz Band	【W-CDMA method】 2GHz/800MHz Band 【GSM method】 GSM850MHz/ GSM900MHz/ GSM1800MHz/ GSM1900MHz	—
	Access method	OFDMA, SC-FDMA	【W-CDMA method】 DS-CDMA, T-HCDMA 【GSM method】 TDMA	—
	Data communication speed	Uplink :37.5Mbps Max Downlink :112.5Mbps Max	【W-CDMA method】 Uplink : 5.7Mbps Max Downlink: 42.2Mbps Max 【GSM method】 Uplink : 237kbps Max Downlink: 237kbps Max	Best effort type
Monitor interface	BtoB connector	ANT1_n, ANT2_n, TRX_n, LEDG_n, LEDGMS_n, ADL_n、3G / LTE (GSM), SMS_n, CBS_ETWS_n		—
	Flexible connector	PACKET, ANT1, ANT2, ANT3, LEDG, LEDR, LEDGMS		—
UIM card interface	Conformity to 3GPP TS31series			
External interface	Main connector	80pin BtoB connector		—
		57 pin flexible connector		—
	Antenna connector	U.FL×2 (Main, Sub)		—

Item	Description		Remarks
	LTE mode (LTE method)	Roaming mode (W-CDMA/GSM method)	
Operation environment	Temperature:-30℃ to +60℃ Humidity:25% to 85% (Without condensation)		—
Storage environment	Temperature:-40℃ to +85℃、 Humidity:25% to 85% (Without condensation)		Without electrical and mechanical stress
Power supply voltage	DC+3.3V to 4.2V		Recommendation DC+3.7V
Power supply ripple	50mVp-p (0Hz to 2.5GHz) or less		—
Current consumption	During communication:TBD mA or less		Measurement condition: 500 ms average. With output of maximum TX power
	Stand-by state:TBD mA or less		Stationary state in in-service area Without neighbor cell search. ER-OFF USB:inactive DRX cycle:2.56 sec Environment temperature: 25℃±2℃ Power supply voltage:3.7V
	Inrush current drain:TBD A or less (Within 100μsec)		Power supply voltage condition: With the supply of the voltage of 3.7V (Which is voltage to reach to the stable state in more than 300μs after start of power supply). Note) When supply the voltage except the above condition, inrush current drain may exceed the value stated.
	Peak current drain:TBD A or less		—
Dimensions	Approx. 36.5(W)×Approx. 35.7(D)×Approx. 5.0(H) mm		Without convex part
Weight	Approx. 11g		—
Electrostatic withstand voltage	±1kV (all pins)		—
Vibration condition	After a vibration of 19.6m/s^2 (2G) acceleration and the frequency of 30 to 100 Hz is applied to this device with the one cycle sweeping time of 20 minutes for up/down, left/right, and back/forth directions, the function and performance of this device is normal with no damage or dropped parts observed.		—
Environmental compliance	RoHS compliant		—
Technical standard conformity proof (the construction design certification by the registration proof institution)	Construction design certification number:TBD		—
Technical standard conformity certification of the terminal equipment	Certification number: TBD		—

Interface

1. Main connector

This device has two main connectors. One is flexible connector on the A-side and another is BtoB connector on the B-side. They each contain the interface of power supply, UART , USB (only in case of BtoB connector), UIM card. RF connectors on A-side are used to connect the external antennas.

■Flexible connector

This flexible connector is same as one used in UM01/02 series.

Connector specification		
Number of pins	57	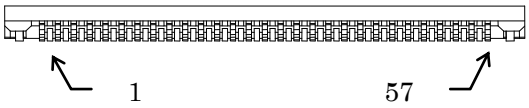
Pin pitch	0.3 ㎜	
Connection type	Connector for FPC	
Model number	57FXL-RSM1-S-H-G-TB(LF)(SN)	
Manufacturer	JST CO., LTD	

●Assignment of connector pins

Connector Pin					
Type	**Pin No.**	**Pin Name**	**Signal Direction (UM04-KO ⇔ external device)**	**Signal Function**	**Setting of unused pins**
Power supply	1	SG	—	Grounding	Unconnection prohibited
	20	SG	—		
	22	SG	—		
	23	SG	—		
	28	SG	—		
	33	SG	—		
	37	SG	—		
	51	SG	—		
	53	SG	—		
	55	SG	—		
	57	SG	—		
	2	VCC	←	Power Supply (3.3 to 4.2V)	
	4	VCC	←		
	6	VCC	←		
	48	VCC	←		
	50	VCC	←		
Power supply control	30	PWRKEY	←	Power ON/OFF request	Open
	43	SYSRST	←	System reset	Open
UARTserial interface	41	XCD	→	Carrier detection signal	Open
	39	XCI	→	Incoming call indication signal	Open
	35	XCS	→	Permission signal of sending from this device	Open
	32	XRS	←	Request signal of sending from external device	Open
	31	XER	←	Ready signal from external device	Open
	29	XDR	→	Ready signal from this device	Open
	27	RD	→	Received data	Open
	25	SD	←	Sending data	Open
	19	DTE1	←	External device serial communication data speed configuration	Open
	17	DTE2	←		Open
	21	DTE3	←		Open
Monitor interface	13	PACKET	→	In packet service area/Out of packet service area	Open
	11	ANT3	→	Antenna indication 3	Open
	9	ANT2	→	Antenna indication 2	Open
	7	ANT1	→	Antenna indication 1	Open
	40	LEDG	→	For communication status display	Open
	36	LEDR	→	For communication status display	Open
	34	LEDGMS	→	For communication status display	Open
UIM card interface	18	SIM_VCC(C1)	→	Power to the UIM card	Unconnection prohibited
	15	SIM_RST(C2)	→	Reset signal	
	14	SIM_CLK(C3)	→	Clock signal	
	12	SIM_GND(C5)	—	Ground	
	10	SIM_DIO(C7)	⇔	Data input/output	
Maintenance interface	3	N.C.	—	Manufacturer maintenance	Connection prohibited
	16	N.C.	—		
	26	N.C.	—		
	38	N.C.	—		
	42	N.C.	—		

Connector Pin					
Type	**Pin No.**	**Pin Name**	**Signal Direction (UM04-KO ⇔ external device)**	**Signal Function**	**Setting of unused pins**
	44	N.C.	–		
	45	N.C.	–		
	46	N.C.	–		
	47	N.C.	–		
	49	N.C.	–		
	52	N.C.	–		
	54	N.C.	–		
	56	N.C.	–		
N.C.	5	N.C.	–	Not used	Connection prohibited
	8	N.C.	–	Not used	Connection prohibited
	24	N.C.	–	Not used	Connection prohibited

●Electrical characteristics

Item		Pin No.		Min	Typ	Max	Unit	Remarks
Power supply input	VCC	2,4,6,48,50		3.3	3.7	4.2	V	—
Power supply control PWRKEY	VT+	30		0.77	—	1.44	V	Schmitt trigger
	VIH	30		1.44	—	5.25	V	—
			ILEAK	—	—	10	μA	—
	VT-	30		0.33	—	0.77	V	Schmitt trigger
	VIL	30		0	—	0.33	V	—
			ILEAK	—	—	-10	μA	—
	Hysteresis	30		0.34	—	0.8	V	—
Power supply control SYSRST	VT+	43		0.7	1.1	1.5	V	Schmitt trigger
	VIH	43		1.5	—	5.25	V	—
			ILEAK	—	—	10	μA	—
	VT-	43		0.25	0.61	0.9	V	Schmitt trigger
	VIL	43		0	—	0.25	V	—
			ILEAK	—	—	-10	μA	—
	Hysteresis	43		0.15	0.49	1	V	—
UARTserial interface XCD, XCI, XCS, XRS, XER, XDR, SD, RD	VT+	25,31,32		0.7	1.1	1.5	V	Schmitt trigger
	VIH	25,31,32		1.5	—	5.25	V	—
			ILEAK	—	—	30	μA	—
	VT-	25,31,32		0.25	0.61	0.9	V	Schmitt trigger
	VIL	25,31,32		0	—	0.25	V	—
			ILEAK	—	—	-2	mA	—
	Hysteresis	25,31,32		0.15	0.49	1	V	—
	VOH	27,29,35,39,41		—	—	5.25	V	Equivalent to open circuit imp.
			IOH	—	—	—	mA	There is no definition because of open drain output
	VOL	27,29,35,39,41		0	—	0.33	V	—
			IOL	—	2	—	mA	—
Serial communication data speed configuration DTE1, DTE2, DTE3	VT+	17,19,21		0.7	1.1	1.5	V	Schmitt trigger
	VIH	17,19,21		1.5	—	5.25	V	—
			ILEAK	—	—	10	μA	—
	VT-	17,19,21		0.25	0.61	0.9	V	Schmitt trigger
	VIL	17,19,21		0	—	0.25	V	—
			ILEAK	—	—	-10	μA	—
	Hysteresis	17,19,21		0.15	0.49	1	V	—
Monitor interface ANT1, ANT2, ANT3, LEDR, LEDG, LEDGMS, PACKET	VOH	7,9,11,13,34,36,40		—	—	5.25	V	Equivalent to open circuit imp.
			IOH	—	—	—	mA	There is no definition because of open drain output
	VOL	7,9,11,13,34,36,40		0	—	0.28	V	—
			IOL	—	2	—	mA	—
UIM card interface SIM_VCC(C1) SIM_RST(C2) SIM_CLK(C3) SIM_DIO(7)	Output voltage	18		2.7	—	3.3	V	Class B
				1.62	—	1.98	V	Class C
	VIH	10		C1×0.7	—	C1+0.3	V	Class B/C
	VIL	10		-0.3	—	C1×0.2	V	Class B/C
	VOH	15		C1×0.8	—	C1	V	Class B/C
			IOH	—	-1	—	mA	Class B/C
	VOL	15		0	—	C1×0.2	V	Class B/C

Item		Pin No.		Min	Typ	Max	Unit	Remarks
			IOL	—	—	2	mA	Class B/C
	VOH	10		C1×0.7	—	C1	V	Class B/C
			IOH	—	-1	—	mA	Class B/C
	VOL	10		0	—	0.4	V	Class B
				0	—	0.3	V	Class C
			IOL	—	—	1	mA	Class B/C
	VOH	14		C1×0.7	—	C1	V	Class B/C
			IOH	—	-1	—	mA	Class B/C
	VOL	14		0	—	C1×0.2	V	Class B/C
			IOL	—	—	2	mA	Class B/C

■BtoB Connector

This flexible connector is same as one used in UM03-KO.

Connector specification		
Number of pins	80	
Pin pitch	0.5 ㎜	
Connection type	Board to Board Connector	
Model number	DF12(3.0)-80DS-0.5V(86)	
Manufacturer	Hirose Electric CO., LTD.	

◆Please use the connector shown in the following table for the external device which connected to this device.

Connector specification	
Number of pins	80
Pin pitch	0.5mm
Connection type	Board to Board Connector
Model number	DF12B(3.0)-80DP-0.5V(86)
Manufacturer	Hirose Electric CO., LTD.

●Assignment of connector pins

Connector Pin					
Type	**Pin No.**	**Pin Name**	**Signal Direction (UM04-KO⇔external device)**	**Signal Function**	**Setting of Unused pins**
Power supply	14	SG	–	Grounding	Unconnection prohibited
	18	SG	–		
	21	SG	–		
	31	SG	–		
	34	SG	–		
	37	SG	–		
	38	SG	–		
	39	SG	–		
	40	SG	–		
	51	SG	–		
	41	VCC	←	Power supply (3.3 to 4.2V)	Unconnection prohibited
	42	VCC	←		
	43	VCC	←		
	44	VCC	←		
	45	VCC	←		
	46	VCC	←		
	49	BtoB_DET(SG)	–	BtoB connection detection signal	Unconnection prohibited [Note1]
Power supply control	5	PWRKEY_ON_n	←	Power ON request	Open
	6	PWRKEY_OFF_n	←	Power OFF request	Open
	4	SYSRST_n	←	System reset	Open
UARTserial interface	76	XCD	→	Carrier detection signal	Open
	80	XCI	→	Incoming call indication signal	Open
	78	XCS	→	Permission signal of sending from this device	Open

Connector Pin					
Type	**Pin No.**	**Pin Name**	**Signal Direction (UM04-KO⇔external device)**	**Signal Function**	**Setting of Unused pins**
	1	XRS	←	Request signal of sending from external device	Open [Note2]
	3	XER	←	Ready signal from external device	Open [Note2]
	79	XDR	→	Ready signal from this device	Open
	77	RD	→	Received data	Open
	2	SD	←	Sending data	Open [Note2]
	10	DTE1	←	External device serial communication data speed configuration	Depends on configured value
	11	DTE2	←		
	12	DTE3	←		
モニタ インタフェース	71	ANT1_n	→	Antenna indication 1	Open
	72	ANT2_n	→	Antenna indication 2	Open
	70	TRX_n	→	Packet communication status indication	Open
	48	LEDG_n	→	Operation status indication	Open
	47	LEDGMS_n	→	Communication status indication	Open
	30	ADL_n	→	Software update status indication	Open
	68	SMS_n	→	Notification of SMS receiving	Open
	67	CBS_ETWS_n	→	Notification of Area Mail receiving	Open
	74	3G/LTE (GSM)	→	Attached network indication	Open
UIM card interface	54	SIM_VCC(C1)	→	Power supply	Unconnection prohibited
	52	SIM_RST(C2)	→	Reset Signal	
	55	SIM_CLK(C3)	→	Clock signal	
	56	SIM_GND(C5)	—	Grounding	
	53	SIM_DIO(C7)	⇔	Data input/output	
USB interface	20	USB_DPLUS	⇔	Data signal +	Open
	19	USB_DMINUS	⇔	Data signal -	Open
	23	USB_VBUS	←	USB detection signal	Open
	22	USB_H_RDY_n	←	Request of activation from external device	Pull-down [Note3]
	66	USB_D_RDY_n	→	Request of activation from this device	Open
Maintenance interface	17	N.C.	—	Manufacturer maintenance	Connection prohibited
	25	N.C.	—		
	58	N.C.	—		
	59	N.C.	—		
	60	N.C.	—		
	61	N.C.	—		
	62	N.C.	—		
	63	N.C.	—		
	64	N.C.	—		
	65	N.C.	—		
	73	N.C.	—		
N.C.	7	N.C.	—	Not used	Connection prohibited
	8	N.C.	—		
	9	N.C.	—		

Connector Pin					
Type	**Pin No.**	**Pin Name**	**Signal Direction (UM04-KO⇔external device)**	**Signal Function**	**Setting of Unused pins**
	13	N.C.	—		
	15	N.C.	—		
	16	N.C.	—		
	24	N.C.	—		
	26	N.C.	—		
	27	N.C.	—		
	28	N.C.	—		
	29	N.C.	—		
	32	N.C.	—		
	33	N.C.	—		
	35	N.C.	—		
	36	N.C.	—		
	50	N.C.	—		
	57	N.C.	—		
	69	N.C.	—		
	75	N.C.	—		

[Note1] This signal is for the detection of BtoB connector connection. Please connect to SG without fail.
[Note2] The connection of the pull-up resistor is no problem. In case of connecting the pull-up resistor, please use the power supply for pulling up within +1.8V to +5.25V.
[Note3] Recommended resistor value of the pulling down is 10kΩ to 100kΩ. Direct connection with SG is no problem.

●Electrical characteristics

Current I regards its direction to flow into this device as plus.

Item		Pin No.		Min	Typ	Max	Unit	Remarks
Power supply input	VCC	41,42,43,44,45,46		3.3	3.7	4.2	V	—
Power supply control PWRKEY_ON_n	VT+	5		0.77	—	1.44	V	Schmitt trigger
	VIH	5		1.44	—	5.25	V	—
			ILEAK	—	—	10	μA	—
	VT-	5		0.33	—	0.77	V	Schmitt trigger
	VIL	5		0	—	0.33	V	—
			ILEAK	—	—	-10	μA	—
	Hysteresis	5		0.34	—	0.8	V	—
Power supply control PWRKEY_OFF_n SYSRST_n	VT+	4,6		0.7	1.1	1.5	V	Schmitt trigger
	VIH	4,6		1.5	—	5.25	V	—
			ILEAK	—	—	10	μA	—
	VT-	4,6		0.25	0.61	0.9	V	Schmitt trigger
	VIL	4,6		0	—	0.25	V	—
			ILEAK	—	—	-10	μA	—
	Hysteresis	4,6		0.15	0.49	1	V	—
UARTserial interface XCD, XCI, XCS, XRS, XER, XDR, SD, RD	VT+	1,2,3		0.7	1.1	1.5	V	Schmitt trigger
	VIH	1,2,3		1.5	—	5.25	V	—
			ILEAK	—	—	30	μA	—
	VT-	1,2,3		0.25	0.61	0.9	V	Schmitt trigger
	VIL	1,2,3		0	—	0.25	V	—
			ILEAK	—	—	-2	mA	—
	Hysteresis	1,2,3		0.15	0.49	1	V	—
	VOH	76,77,78,79,80		—	—	5.25	V	Equivalent to open circuit imp.
			IOH	—	—	—	mA	There is no definition because of open drain output
	VOL	76,77,78,79,80		0	—	0.33	V	—
			IOL	—	2	—	mA	—
Serial communication data speed configuration DTE1, DTE2, DTE3	VT+	10,11,12		0.7	1.1	1.5	V	Schmitt trigger
	VIH	10,11,12		1.5	—	5.25	V	—
			ILEAK	—	—	10	μA	—
	VT-	10,11,12		0.25	0.61	0.9	V	Schmitt trigger
	VIL	10,11,12		0	—	0.25	V	—
			ILEAK	—	—	-10	μA	—
	Hysteresis	10,11,12		0.15	0.49	1	V	—
USB interface USB_H_RDY_n	VT+	22		0.7	1.1	1.5	V	Schmitt trigger
	VIH	22		1.5	—	5.25	V	—
			ILEAK	—	—	10	μA	—
	VT-	22		0.25	0.61	0.9	V	Schmitt trigger
	VIL	22		0	—	0.25	V	—
			ILEAK	—	—	-10	μA	—
	Hysteresis	22		0.15	0.49	1	V	—
USB_D_RDY_n	VOH	66		—	—	5.25	V	Equivalent to open circuit imp.
			IOH	—	—	—	mA	There is no definition because of open drain output
	VOL	66		0	—	0.33	V	—

Item		Pin No.		Min	Typ	Max	Unit	Remarks
			IOL	—	2	—	mA	—
Monitor interface ANT1_n, ANT2_n, TRX_n, LEDG_n, LEDGMS_n, SMS_n,ADL_n, CBS_ETWS_n, 3G/LTE(GSM)	VOH	30,47,48,67,68,69,		—	—	5.25	V	Equivalent to open circuit imp.
		70,71,72,74	IOH	—	—	—	mA	There is no definition because of open drain output
	VOL	30,47,48,67,68,		0	—	0.28	V	—
		70,71,72,74	IOL	—	2	—	mA	—
UIM card interface SIM_VCC(C1) SIM_RST(C2) SIM_CLK(C3) SIM_DIO(7)	Output voltage	54		2.7	—	3.3	V	Class B
				1.62	—	1.98	V	Class C
	VIH	53		C1× 0.7	—	C1+ 0.3	V	Class B/C
	VIL			-0.3	—	C1× 0.2	V	Class B/C
	VOH	52		C1× 0.8	—	C1	V	Class B/C
			IOH	—	-1	—	mA	Class B/C
	VOL	52		0	—	C1× 0.2	V	Class B/C
			IOL	—	—	2	mA	Class B/C
	VOH	53		C1× 0.7	—	C1	V	Class B/C
			IOH	—	-1	—	mA	Class B/C
	VOL	53		0	—	0.4	V	Class B
				0	—	0.3	V	Class C
			IOL	—	—	1	mA	Class B/C
	VOH	55		C1× 0.7	—	C1	V	Class B/C
			IOH	—	-1	—	mA	Class B/C
	VOL	55		0	—	C1× 0.2	V	Class B/C
			IOL	—	—	2	mA	Class B/C

2. Power supply

(1) Recommended specification for the external power supply

Item	Specification
Voltage range	DC+3.3V to +4.2V (Load condition: Steady supply in 0.1mA to 1,500mA)
Ripple	50mVp-p (0Hz to 2.5GHz) or less
Rating current	1,500mA or more
Inrush current	2A (within 100μs) or less

(2) Power supply input specification

Pin name	Min	Typ	Max	Unit	Remarks
VCC	+3.3	+3.7	+4.2	V	—

(3) Transient specification of the power supply voltage rising

Pin name	Min	Typ	Max	Unit	Remarks
VCC	—	—	50	msec	Refer to the following figure for waveform.

●Transient waveform of power supply voltage rising

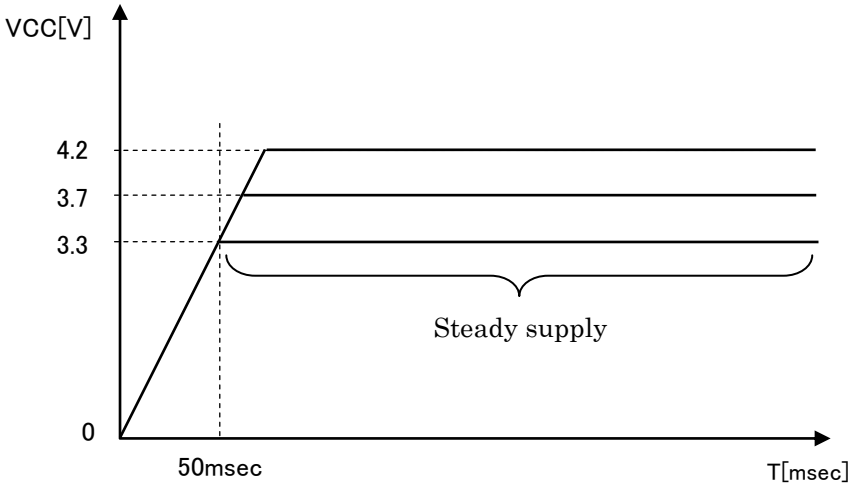

■Power supply control

(1) Power supply control

●Start/Stop flow of this device

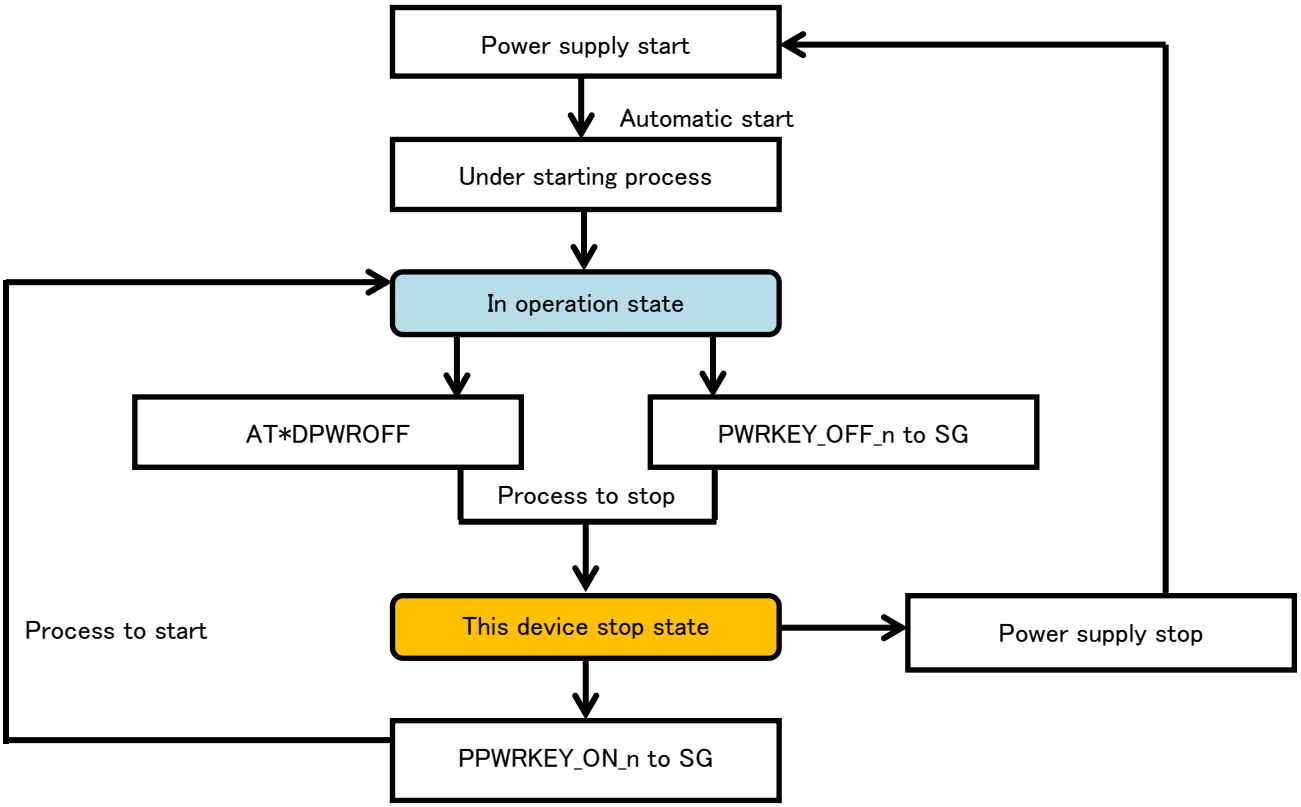

●Power supply control

Item	Process	Remarks
Automatic start	・This device automatically starts by being supplied	・LEDG_n becomes SG by start
Start	・To start this device in stop state, please make PWRKEY_ON_n SG or power supply stop with the interval more than three seconds, and then start by applying power supply again.	
Stop	・This device stops by making PWRKEY_OFF_n pin SG or carrying out AT*DPWROFF.	・When this device is in stop state by stop of power supply, LEDG_n becomes OPEN.

(2) Pin behavior and AC characteristics

●This device operation for the PWRKEY_ON_n input status

Because it causes the malfunction, please input pulses more than specified time. It is recognized as a demand only at the time of state change from OPEN to SG.

Pin state	Process of this device
OPEN→SG→OPEN	Start request (It is recognized as a demand only at the time of state change from OPEN to SG)

●AC characteristics of PWRKEY_ON_n pin

Item		Min	Typ	Max	Unit	Remarks
PWRKEY_ON_n	T_{PWRKEY_ON}	1	—	—	msec	—

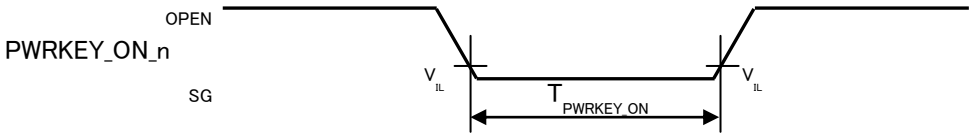

●This device operation for the PWRKEY_OFF_n pin status

Because it causes the malfunction, please input pulses more than specified time. It is recognized as a demand when SG state continues more than 500msec.

Pin state	Process of this device
OPEN→SG→OPEN	Stop request (It is recognized as a demand when SG state continues SG more than 500msec.)

●AC characteristics of PWRKEY_OFF_n pin

Item		Min	Typ	Max	Unit	Remarks
PWRKEY_OFF_n	T_{PWRKEY_OFF}	500	—	—	msec	—

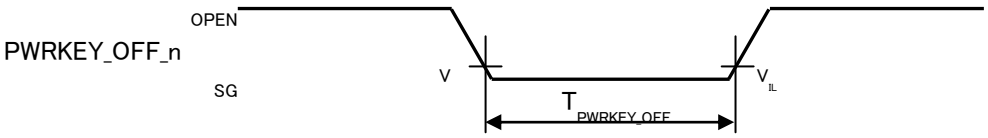

●This device operation for the SYSRST_n pin status

Because it causes the malfunction, please input pulses more than specified time.

Pin state	Process of this device
OPEN→SG→OPEN	Hardware reset (During SG state, hardware reset occurs)

●AC characteristics of SYSRST_n pin

Item		Min	Typ	Max	Unit	Remarks
SYSRST_n	T_{SYSRST}	50	—	—	msec	—

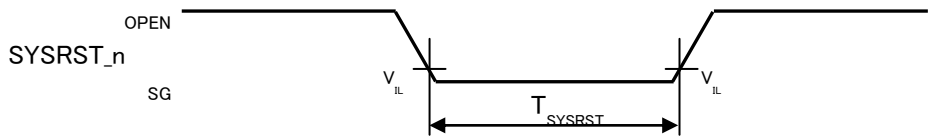

(3) Sequence

Start and stop sequences are shown below.

◆Start method (two types)

・Automatic start

・Start by PWRKEY_ON_n pin

◆Stop method (two types)

・Stop by PWRKEY_OFF_n pin

・Stop by AT command

●Automatic start sequence (XER-SG state)

・Though this device starts automatically in case of XER-OPEN, the XCS and XDR line remain OPEN.

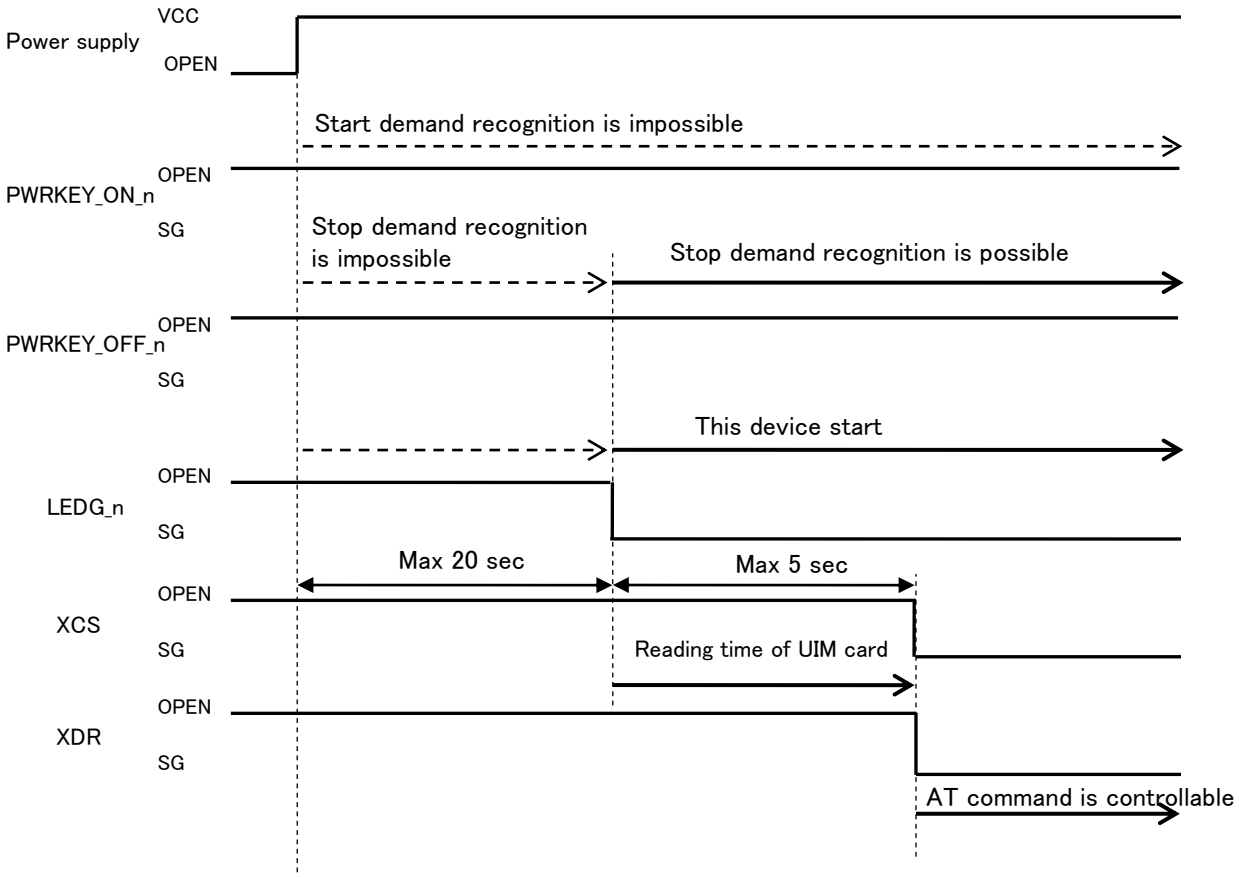

●Start sequence by PWRKEY_ON_n pin (XER-SG state)

・In case of XER-HIGH, the XCS and XDR line remain OPEN.

・Please use this sequence for the start in the VCC supply state after the stop by PWRKEY_OFF_n pin or the AT command.

・Because this device automatically starts regardless of the behavior of PWRKEY_ON_n pin, the start demand by PWRKEY_ON_n pin is not recognized at the time of the automatic start. Before start by PWRKEY_ON_n, please make sure to change PWRKEY_OFF_n to OPEN. When start process is carried out by PWRKEY_OFF_n while PWRKEY_ON_n is SG, this device detects that PWRKEY_OFF_n is SG after start process completed and it stops.

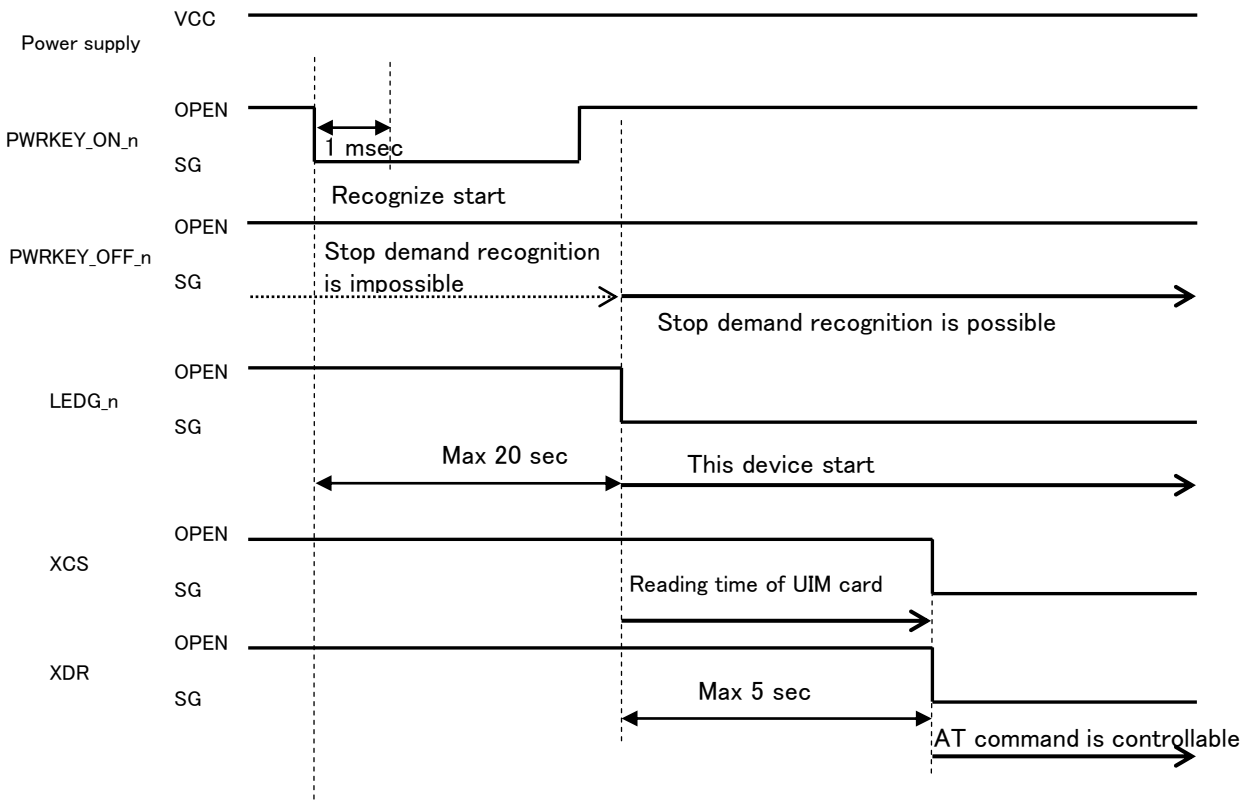

●Stop sequence by PWRKEY_OFF_n pin

・After PWRKEY_OFF_n pin SG is carried out for 500 ms, there is no problem even if it is returned to OPEN in any timing. Please return it to OPEN before the next start. When start process is carried out while PWRKEY_OFF_n is SG, this device detects that PWRKEY_OFF_n is SG after start process completed and it stops.

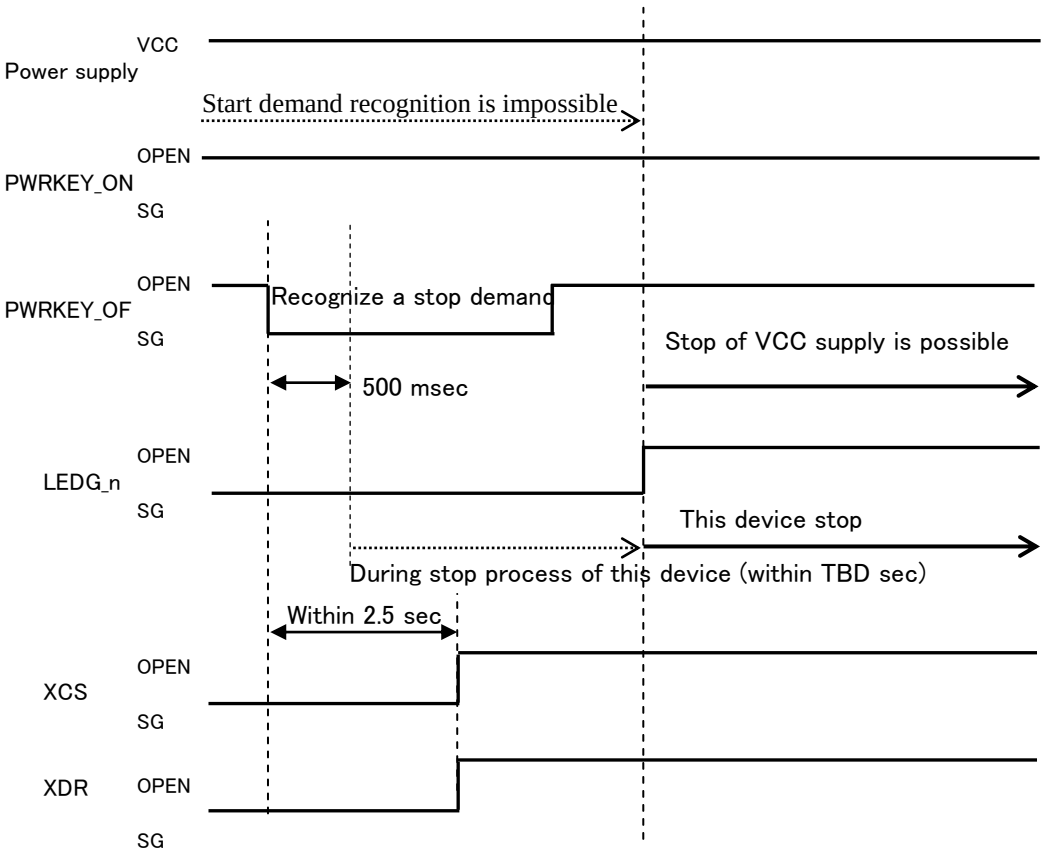

(4) Connection example

●PWRKEY_ON_n pin, PWRKEY_OFF_n pin, SYSRST_n pin

①Connection example with IC

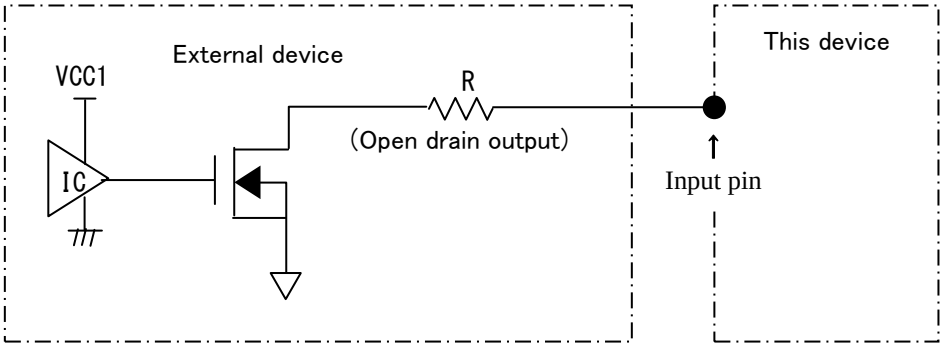

※ R is a dumping resistor. Please design it to adapt to the circuitry in the external device.

②Connection example with switch

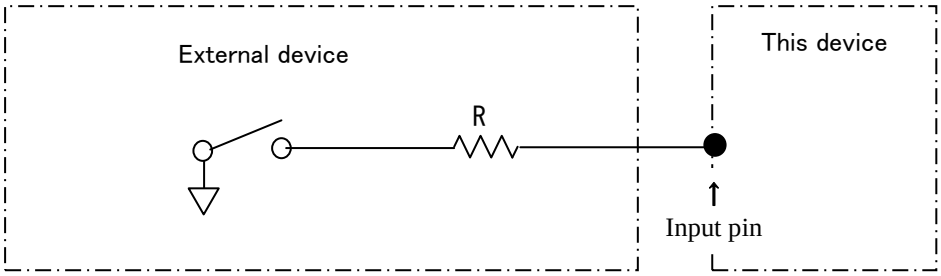

※ R is a dumping resistor. Please design it to adapt to the circuitry in the external device.

■System reset

The specification of system reset signal is shown below.

◆AC characteristic of SYSRST pin

Item		Min	Typ	Max	Unit	Remarks
SYSRST_n	T_{SYSRST}	1.0	—	—	ms	—

・Please do not usually use SYSRST pin.

・But because the system reset does not carry out the normal stop process and internal data saving of this device, it may cause the internal data failure and this device may not start normally.

3. UART interface

The specification of the UART is shown below

Item	Specification
Signal line	SD, RD, XER, XDR, XRS, XCS, XCD, XCI
Communication data speed [bps]	1200/2400/4800/9600/19200/38400/57600/115200/230400/460800
Configuration method of communication data speed	External pins (DTE1, DTE2, DTE3), AT command
Communication format	Start:1bit, Stop:1bit, Data:8bit, Parity:none
Sending/Receiving control	hardware flow control, software flow control, and without flow control
Detection of escape	+++（guard time is specified）
Detection of break	None
Baud rate deviation	Sending:2% or less Receiving:2% or less

■Configuration of serial communication data speed by AT command

Only when the configuration of serial communication data speed by DTE1, DTE2 and DTE3 is 19200 [bps], the configuration by AT command can be used.

●The serial communication data speed configured by AT+IPR

	Serial communication data speed[bps]	Remarks
1	1200	―
2	2400	―
3	4800	―
4	9600	―
5	19200	Initial value
6	38400	―
7	57600	―
8	115200	―
9	230400	―
10	460800	―

■Connection example

●Connection to the flexible connector

(1) Connection example to the UART serial interface output pin

The UART serial interface output pins are the open drain output. At the time of the stop, it becomes high impedance state. Unused pins should be OPEN.

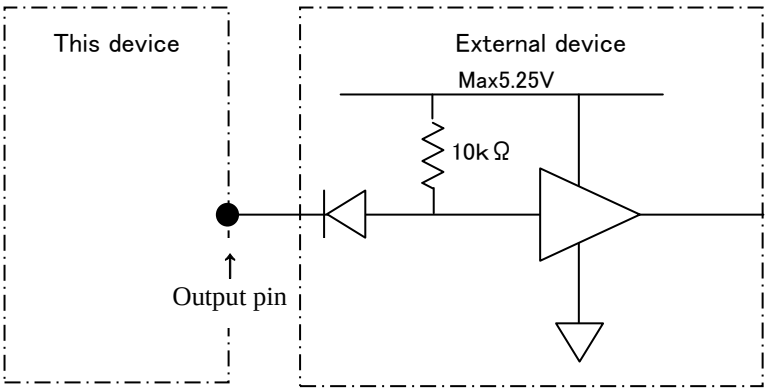

(2) Connection example to the UART serial interface input pin

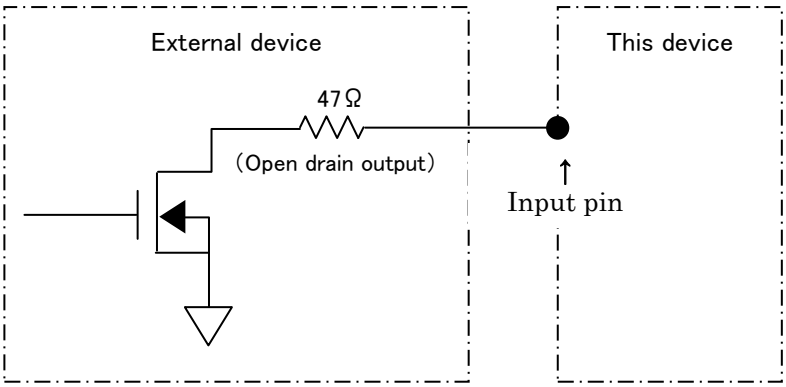

When this device is power off, it becomes high impedance state.

●**Connection to BtoB connector**

(1) Connection example to the UART serial interface output pin (XCD、XCI、XCS、XDR、RD)

The UART serial interface output pins are the open drain output. At the time of the stop, it becomes high impedance state. Unused pins should be OPEN.

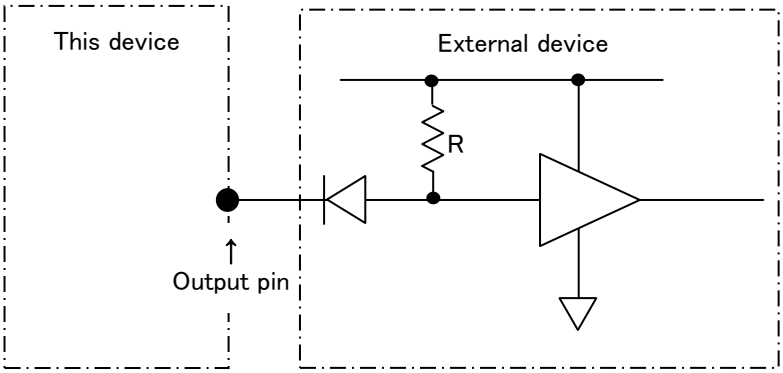

[Note] R is pull-up resistor. Please design it to adapt to the circuitry in the external device.

(2) Direct Connection example to the UART serial interface input pins (XRS, XER, SD, DTE1, DTE2, DTE3)

The input pins are the Schmitt trigger input with tolerant of 5V

●Direct connection example to the UART serial interface input pins

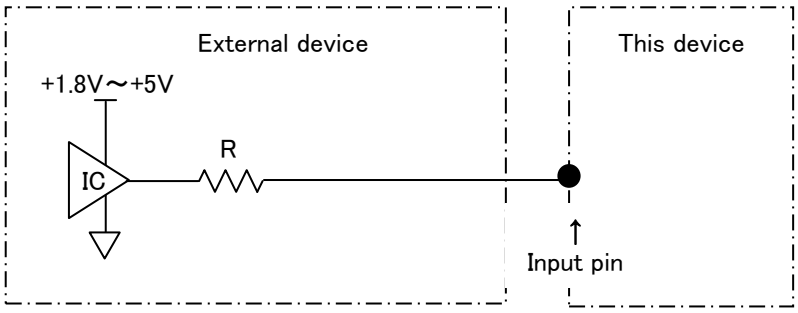

[Note] R is pull-up resistor. Please design it to adapt to the circuitry in the external device.

●Open drain connection example to the UART serial interface input pins

Please input the open drain output when the external device which can not meet DC characteristic is connected.

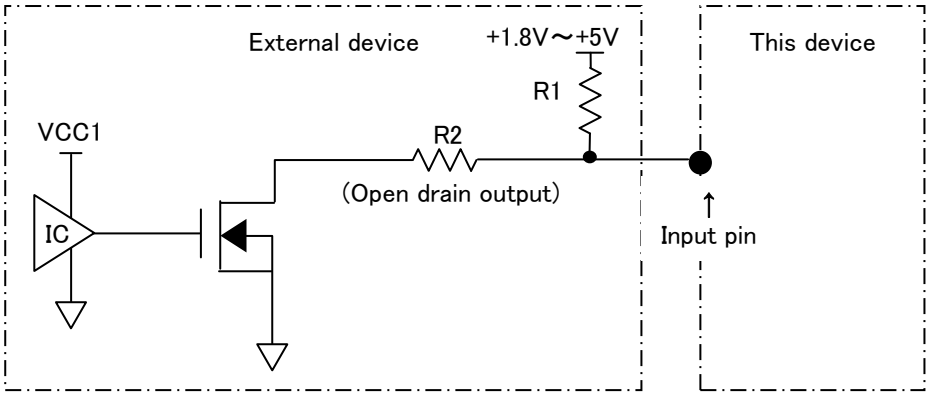

[Note] R1 is pull-up resistor and R2 is dumping resistor. Please design it to adapt to the circuitry in the external device.

●Connection example to DTE1、DTE2、DTE3 input pins

When fixed serial communication data speed is used, please fix the level by pull-up or pull-down depending on configuration value.

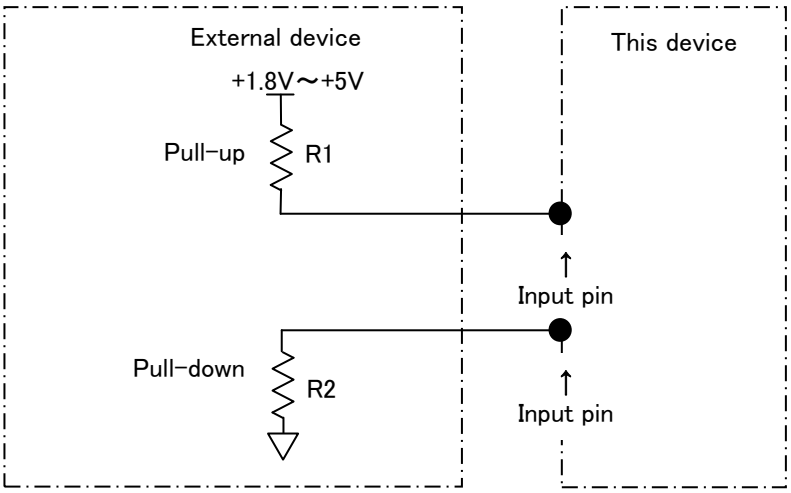

[Note] R1 is pull-up resistor and R2 is pull-down resistor. Please design it to adapt to the circuitry in the external device.

[Requirement of SD pin and RD pin**]**

(1) Requirement of SD pin (input)

①When the external device which is connected to SD pin can not meet DC characteristic, it is necessary to be connected by the open drain output. Dull of wave pattern caused by connection of the open drain output may cause data communication failure. Therefore, requirement for the input waveform for the connection of the open drain output is specified.

②For the requirement for SD pin input waveforms, the ratio per one bit of data which is measured in voltage level of SG interval [A] and OPEN interval [B] should be adjusted within from 50:50 to 56:44.

・This requirement is applied for the waveform that was measured at the most close point to the main connector.

・The slope of the rising wave pattern depends on the circuitry of the external device. In case that the dull of the wave pattern is big and the ratio of SG is wider, for example, please adjust it so that the dull of the wave pattern becomes small to reduce the pull-up resistor value.

●SD pin (input) wave pattern

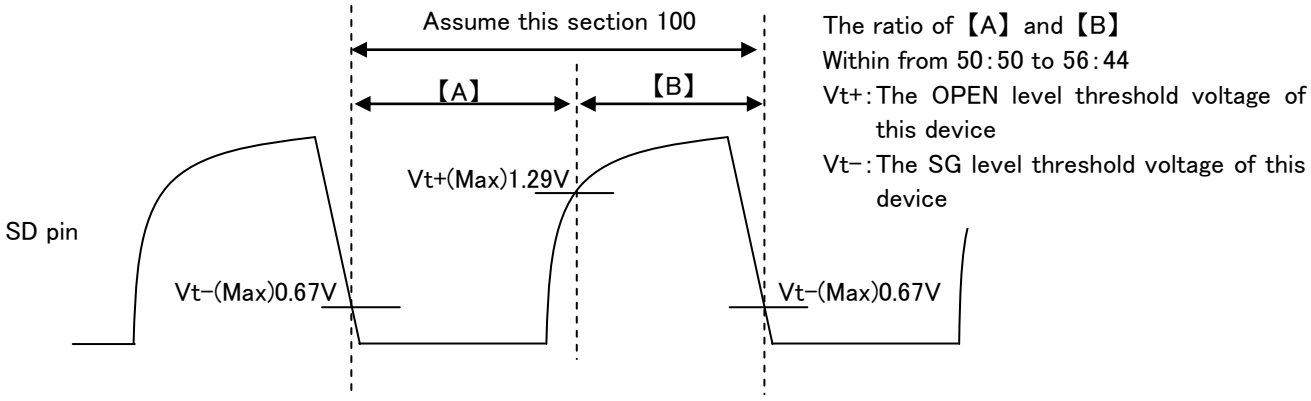

●Waveform measurement point of UART serial receiving data (SD pin)

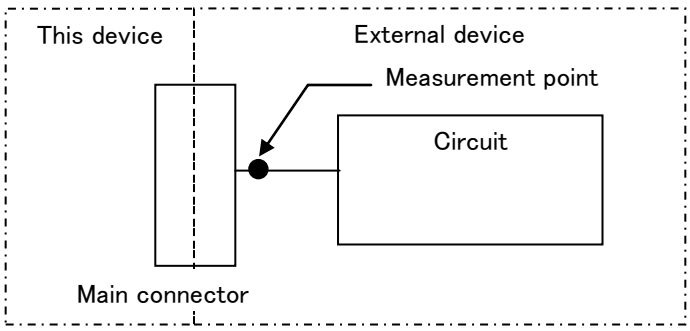

(2)Requirement of RD pin (output)

①The RD pin is the open drain output.

②Dull of rising wave pattern may cause any failure. Please confirm it each external devices to be connected. In case that the dull of the wave pattern is big, for example, please adjust it in external device so that the dull of the wave pattern becomes small to reduce the pull-up resistor value.

4. USB interface

The USB interface of this device is based on USB 2.0 specification. The transmission and reception of data is possible as a USB device. You can use it for the control by the AT command. The connection with the USB host is disconnected when you make reboot (power off / on, reset by AT*DHWRST).

Item	Specification
Communication standard	Conformity USB2.0 (Device)
Communication speed	FULL SPEED (12Mbit/s), 、HIGH SPEED (480Mbit/s)
Signals	USB_DPLUS, USB_DMINUS, USB_VBUS, USB_H_RDY_n, USB_D_RDY_n
Virtual COM port	Port1 : Modem control Port2 : Network card control

■Connection example

(1) USB interface pin (USB_DPLUS, USB_DMINUS, USB_VBUS)

●Connection example to the external device

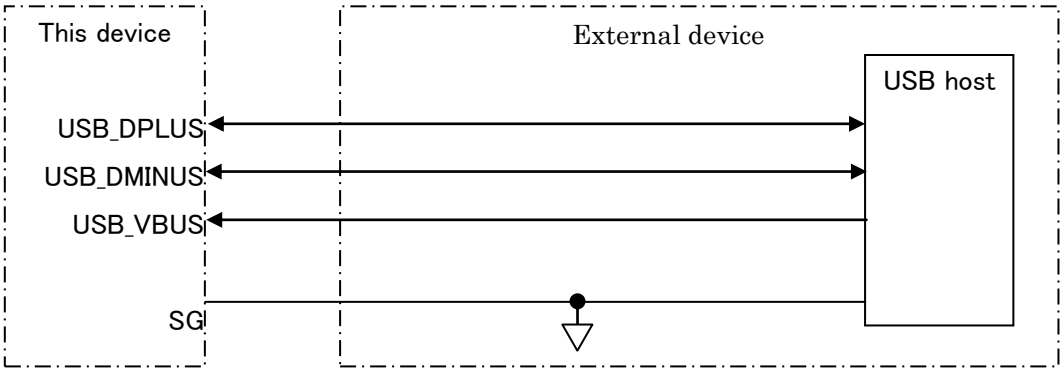

[Note] USB_VBUS does not mean power supply of 5V from a host, and it mean a USB host connection state.

(2)USB_D_RDY_n output pin

This output pin is the open drain output.

At the time of the stop of this device, it becomes the high impedance state. In case of unused condition, set a pin as OPEN.

●Connection example to USB_D_RDY_n output pin

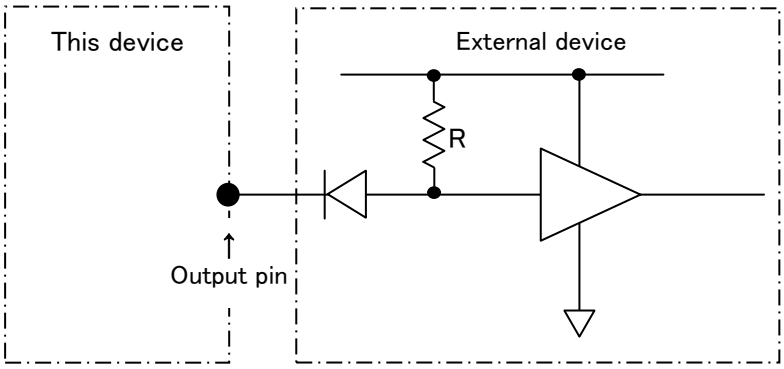

[Note] R is pull-up resistor. Please design it to adapt to the circuitry in the external device.

(3)USB_H_RDY_n input pin

The input composes it of Schmidt trigger of 5V tolerant.

When you connect the external device which cannot meet DC characteristics, it is necessary to input at this device by the output of the open drain.

●Direct connection example to USB_H_RDY_n input pin

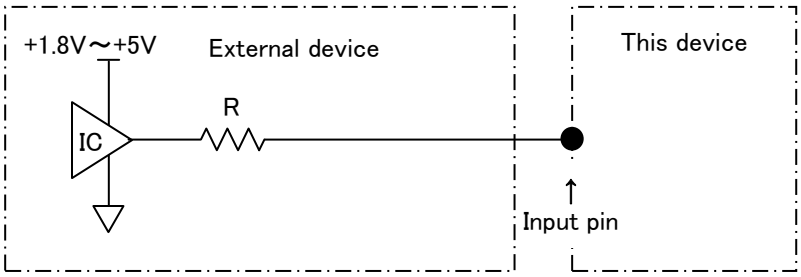

[Note] R is dumping resistor. Please design it to adapt to the circuitry in the external device.

●Open drain connection example to USB_H_RDY_n input pin

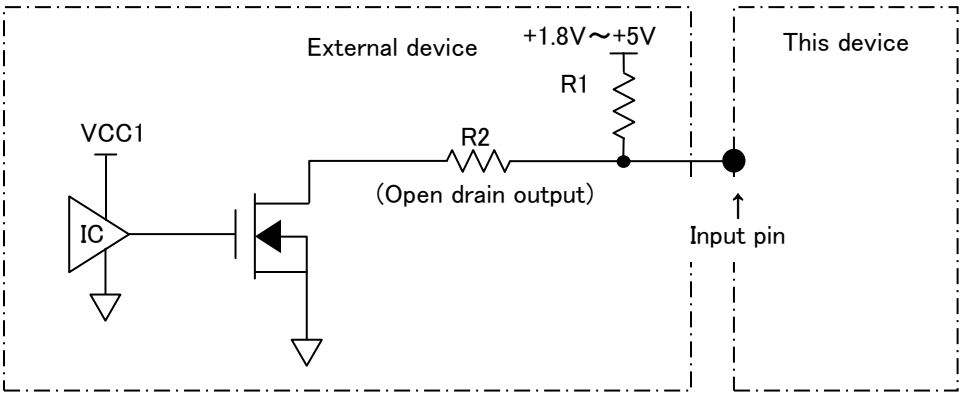

[Note] R1 is pull-up resistor and R2 is dumping resistor. Please design it to adapt to the circuitry in the external device.

5. Monitor interface

■Antenna indication

●Antenna indication specification

	State		ANT1_n	ANT2_n	Remarks
1	In operation	Out of service	OPEN	OPEN	Result code “0” (out of service) for the AT command “AT*DANTE”.
2		Antenna one bar	SG	OPEN	Result code “1” (one bar) for the AT command “AT*DANTE”.
3		Antenna two bars	OPEN	SG	Result code “2” (two bars) for the AT command “AT*DANTE”.
4		Antenna three bars	SG	SG	Result code “3” (three bars) for the AT command “AT*DANTE”.
5	During software update	During download	Depends on receiving signal level	Depends on receiving signal level	—
6		During rewriting (SW update mode 3)	SG	SG	Equals to the state of antenna three bars
7		During reboot (SW update mode 3)	OPEN	OPEN	—
8		During the update completion notification transmitting (SW update mode 3)	Depends on receiving signal level	Depends on receiving signal level	—

※ Refer to “Software update” about the function of software update.

■Attached network indication

3G/LTE (GSM) signal indicates the attached network.

(1)LTE mode

●Attached network indication only in LTE mode (only in Japan)

	Service status	3G/LTE(GSM)
1	In service of LTE	SG
2	Out of service of LTE	OPEN

(2)Roaming mode

●Attached network indication in roaming mode (out of Japan)

	Service status	3G/LTE (GSM)
1	In service of W-CDMA	OPEN
2	Out of service of W-CDMA and in service of GSM	SG
3	Out of service of W-CDMA and out of service of GSM	OPEN

■Communication state indication

Communication state is indicated based on the combination of TRX_n, LEDG_n and LEDGMS_n.

●Communication state indication specification

	State		TRX_n	LEDG_n	LEDGMS_n	Remarks
1	In operation	During stand-by	OPEN	SG	OPEN	—
2		During communication	SG	SG	OPEN	
3		During incoming	OPEN	SG	SG⇔OPEN	[Note1]
4	During software update	During download	Depends on communication state	SG	Depends on communication state	—
5		During rewriting (SW update mode 3)	OPEN	SG	OPEN	—
6		During reboot (SW update mode 3)	OPEN	OPEN	OPEN	—
7		During the update completion notification transmitting (SW update mode 3)	Depends on communication state	SG	Depends on communication state	—
8	Stop state of this device		OPEN	OPEN	OPEN	—

[Note1] Waveform of LEDGMS_n is shown below during incoming.

●Waveform of LEDGMS_n signal during incoming

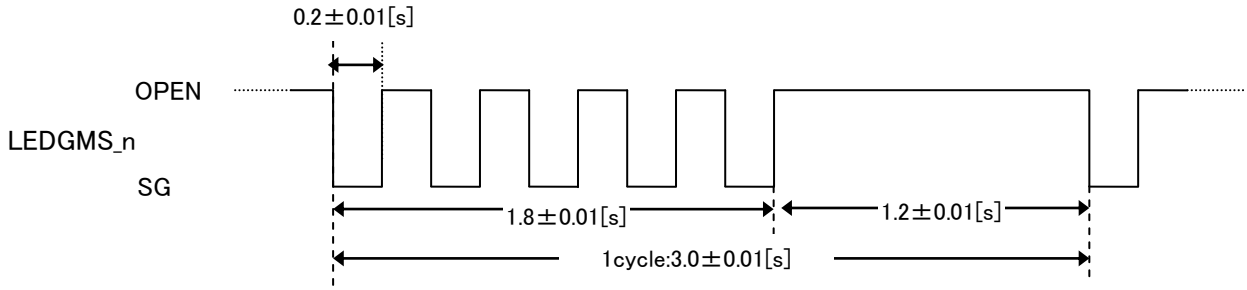

■Software update state indication

Software update state is indicated by ADL_n signal.

●Software update state indication specification

	State		ADL_n (NW reservation type)	ADL_n (AT command type)	Remarks
1	During software update	During download	OPEN	SG	—
2		During rewriting (SW update mode 3)	SG	SG	—
3		During reboot (SW update mode 3)	OPEN	OPEN	—
4		During the update completion notification transmitting (SW update mode 3)	SG	SG	—
5	During other than software update		OPEN	OPEN	-

■SMS receiving indication

The receiving of SMS is indicated by SMS_n.

●SMS receiving indication specification

	State	SMS_n	Remarks
1	Receiving SMS	OPEN→SG→OPEN	—
2	Other than SMS receiving	OPEN	—

●Waveform of SMS_n when a SMS is received

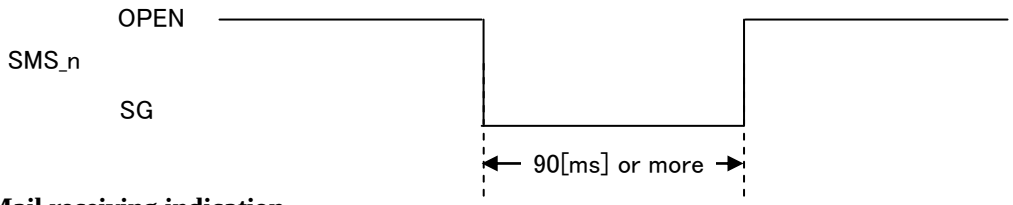

■Area Mail receiving indication

The receiving of Area Mail is indicated by CBS_ETWS_n.

●Area Mail receiving indication specification

	State	CBS_ETWS_n	Remarks
1	Receiving Area Mail	OPEN→SG→OPEN	—
2	Other than Area Mail receiving	OPEN	—

●Waveform of CBS_ETWS_n when an Area Mail is received

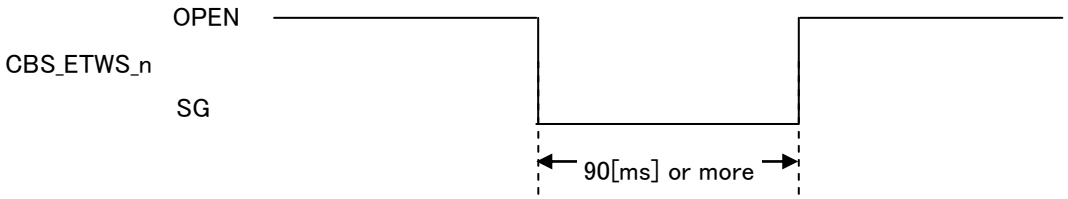

■Connection example

The monitor interface of this device is the open drain output.

●A connection example of the external LED lamp to monitor interface

At the time of the stop of this device, it becomes the high impedance state.

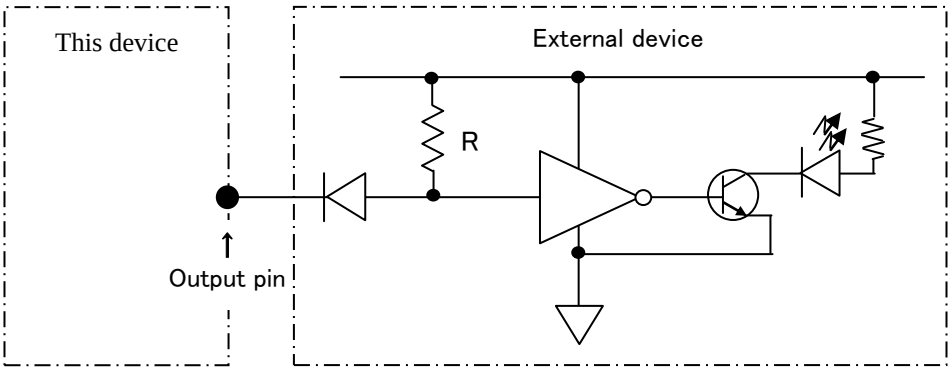

※R is a pull-up resistor. Please assume it a value to adapt to a circuitry of the external device

6. UIM card interface

This device is equipped with UIM card interface that meets the 3GPP TS31series specifications.
UIM card is the IC card which can record the information such as phone numbers and inserts it in a card socket of the external device to connect to this device. Please do not perform take out it, placing it in the power on state to prevent data damage and UIM card damage.

(1) Signal

●Pin assignment of UIM card

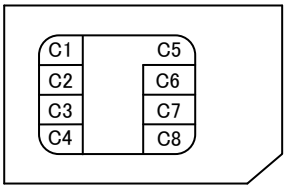

●Pin names of UIM interface

	Pin No.	Pin name
1	C1	UIM_VCC(C1)
2	C2	UIM_RST(C2)
3	C3	UIM_CLK(C3)
4	C4	N.C.
5	C5	UIM_GND(C5)
6	C6	N.C.
7	C7	UIM_DIO(C7)
8	C8	N.C.

(2) Electrical characteristic

●DC characteristic

Pin name	Item		Min	Typ	Max	Unit	Remarks
UIM_VCC(C1)	VCC		2.7	—	3.3	V	Class B
			1.62	—	1.98	V	Class C
UIM_RST(C2)	V_{OH}		C1×0.8	—	C1	V	Class B/C
		I_{OH}	—	-4	—	mA	Class B/C
	V_{OL}		0	—	C1×0.2	V	Class B/C
		I_{OL}	—	3.9	—	mA	Class B/C
UIM_CLK(C3)	V_{OH}		C1×0.7	—	C1	V	Class B/C
		I_{OH}	—	-4	—	mA	Class B/C
	V_{OL}		0	—	C1×0.2	V	Class B/C
		I_{OL}	—	3.9	—	mA	Class B/C
UIM_DIO(C7)	V_{IH}		C1×0.7	—	C1+0.3	V	Class B/C
	V_{IL}		-0.3	—	C1×0.2	V	Class B/C
	V_{OH}		C1×0.7	—	C1	V	Class B/C
		I_{OH}	—	-4	—	mA	Class B/C
	V_{OL}		0	—	C1×0.4	V	Class B
			0	—	0.3	V	Class C
		I_{OL}	—	-	1	mA	Class B/C

●**AC characteristic**

Pin name	Item	Min	Typ	Max	Unit	Remarks
UIM_RST(C2)	T_R/T_F	—	—	400	μs	—
UIM_CLK(C3)	T_R/T_F	—	—	50	ns	—
UIM_DIO(C7)	T_R/T_F	—	—	1.0	μs	—

(3) Connection method

For an output signal from this device, please be connected directly with a card socket to comply DC and AC characteristics. If its connection is not direct, please care for the delay of signal timing and loss of signal level

●The recommended equivalent circuit for UIM card interface

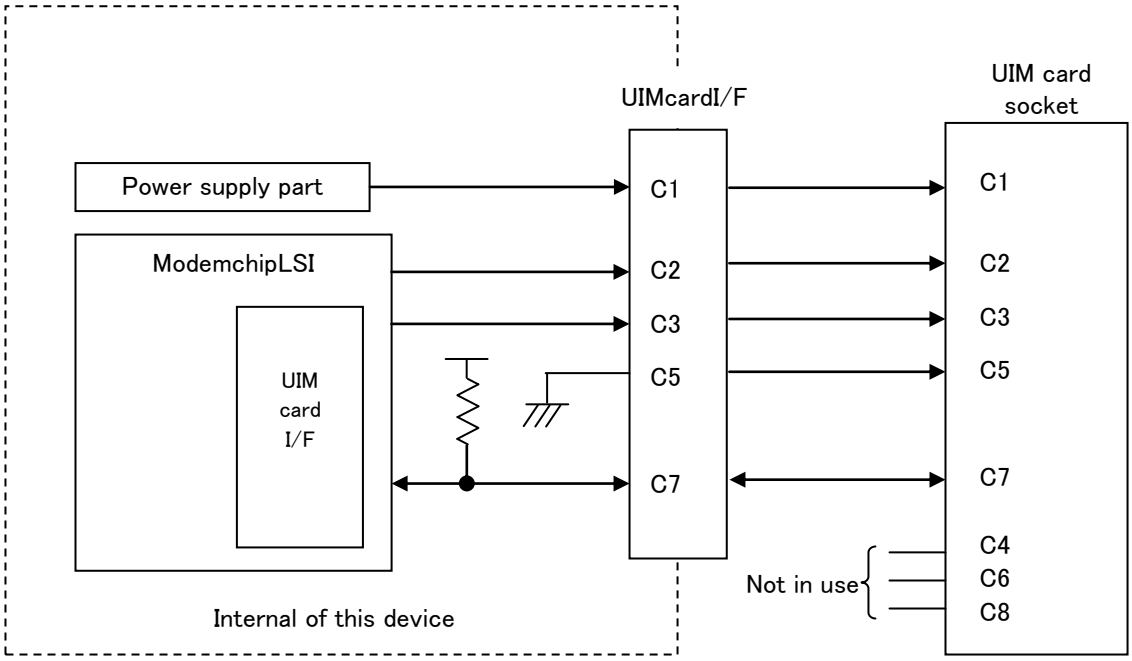

(4) Recommended card socket

Please use the following recommended card socket.

●Recommended card socket

Size	Model	Manufacturer	Remarks
Standard	SF7W006S1AE1000	Japan Aviation Electronics Industry	Hinge type
Mini	SF15W006S4BR2000	Japan Aviation Electronics Industry	Hinge type

(5) PIN code

In this device, only PIN1 code is used for the password of the DOCOMO UIM card.

●About PIN1 code

The PIN1 code is four digits to eight digits of passwords to input to prevent the unauthorized use of the terminal by the third party.

It comes to be able to use service using LTE networks such as packet communication, SMS by inputting PIN1 code.

●Input of PIN1 code

Input of the PIN1 code is necessary when PIN1 code becomes effective. At the time of the subscription, the PIN1 code is set for invalidity.

●Change of PIN1 code

The PIN1 code is set to “0000” at the time of the subscription. You can change the code when necessary. Please note that three consecutive failed attempts to enter the PIN1 code will automatically lock the code entry. Please do not forget the set PIN1 code by writing it down and saving it in a secure location

●About PIN1 unlock code

The PIN1 unlock code is used to clear the locked state of the PIN1 code. This code will be provided to the customer at the time of the subscription. Entering the eight digits PIN1 unlock code clears the locked state. Note that ten consecutive failed attempts to enter the PIN1 unlock code will automatically lock the code entry. If you forget the PIN1 unlock code or when the PIN1 code lock can not be cleared, please contact the customer service.

7. RF connector (Main/Sub)

This device is equipped with RF connectors to connect the antenna.

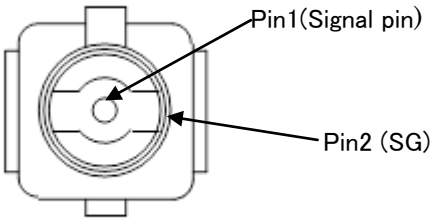

■Used connector

●A model name and the manufacturer name of the RF connector are shown below

	RF connector (This device side)	RF connector [Note1] (External device side)
Model name	U.FL-R-SMT	U.FL-LP-040 U.FL-LP-066
Manufacturer	Hirose Electric CO., LTD	Hirose Electric CO., LTD

[Note1] Confirm the details with the manufacturer, as the part number will be different depending on the diameter of the used cable.

■Pin assignment

●Pin assignment

	Signal	**No.**	**Pin name**	**Description**	**Signal Direction (This device ⇔ Antenna)**	**Remarks**
TRX connector (Main)	Transmit and receive	1	TRX	Transmit and receive signal	⇔	2GHz/800MHz RF signals
		2	SG	Grounding	—	—
TRX connector (Sub)	Receive	1	TRX	Receive signal	⇔	2GHz/800MHz RF signals
		2	SG	Grounding	—	-

8. External antenna

・The external antenna (optional product) of DOCOMO can be used as the external antenna to be connected to this device.

・Plural antennas, which are main antenna (for transmit and receive) and sub antenna (for receive), can be connected.

・About the selection of use of the plural or single antenna, it can be configured by the command "AT*KMIMO" which is the AT command to select MIMO receiving or not MIMO receiving.

・If "not MIMO receiving" is selected, this device can be in operation with single antenna. In that case, please connect the external antenna to main antenna connector.

●External antennas of the optional products (Sale product particularly) of DOCOMO

	Name	Connector type	Remarks
1	Roof-top antenna for FOMA adaptor 02	SMA-P	Dual band (2 GHz/800 MHz) antenna Supplied with an antenna cable (about 5.5 meters long)
2	Simple antenna for FOMA adaptor	SMA-P	Dual band (2 GHz/800 MHz) antenna Supplied with an antenna cable (about 5.0 meters long)
3	Compact water-proof antenna for FOMA adaptor	SMA-P	Dual band (2 GHz/800 MHz) antenna Supplied with an antenna cable (about 2.5 meters long)

The connector adaptation methods (U.FL to SMA) for connecting this device to the antenna recommended in the above list are shown below, with examples of adaptor types.
As the method of connector adaptation, you can use either an adaptor cable or a combination of an adaptor connector and an RF cable. Please refer to the manufacturer for the specification of cable and connector.

[Adaptor cable]

This adaptor cable is used to converts RF connector (U.FL female) into a SMA-male.

Model number	Manufacturer	Type	Remarks
HRMJ-U.FL-066N1-A-100RS	Hirose Electric CO., LTD	U.FL female to SMA female	Cable length 100mm

[RF cable and adaptor connector]

●RF cable

Model number	Manufacturer	Type	Remarks
U.FL-2LP-04K2T-A-(80)	Hirose Electric CO., LTD	U.FL female to U.FL female	Cable length 80mm Cable color black

●Adaptor connector

Model number	Manufacturer	Type	Remarks
HRMJ-U.FLJ-PC-1	Hirose Electric CO., LTD	U.FL male to SMA female	For direct connection to the circuit board.

Precautions for connecting to the external device

Precautions for design of the external device

The external device must be adequately designed to provide sufficient heat dissipation so that the internal temperature of the external device will not exceed the operating environment temperature range specified for this device (+60°C) when this device is installed in the external device.

In addition, the external device must be adequately designed to provide sufficient heat dissipation so that the surface temperature of the enclosure of this device will not exceed +85°C as this device may generate excess heat depending on the communication condition.

Recommended installation method

■In case of using the flexible connector

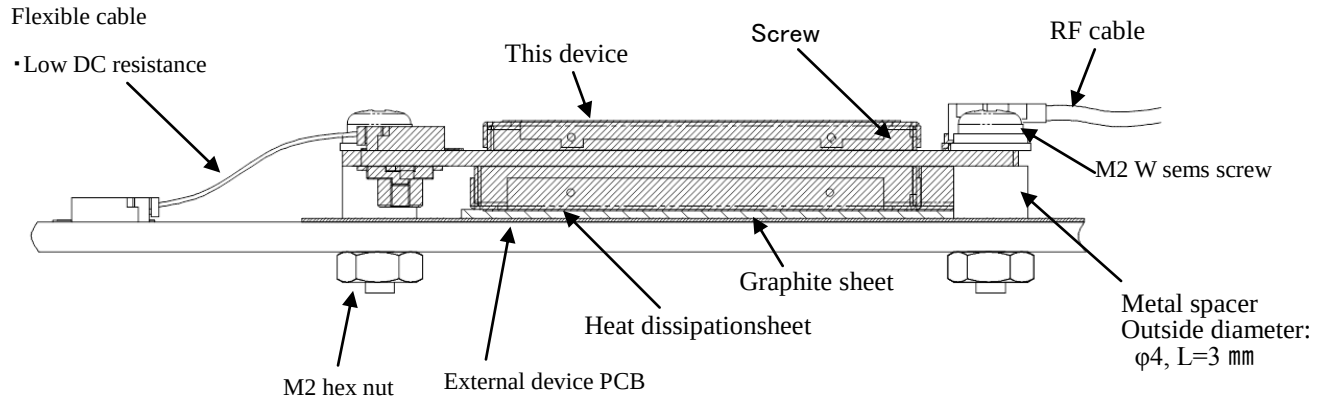

・There not being unnecessary radiation in receive frequency band.
・Shields the sensitive circuit as measure to protect from RF power.
・Use a conductive material. (e.g. PCB, metal chassis, etc.)
for the mounting surface of the external device to enable sufficient heat transfer.
・Do not short-circuit with a ground of the external device side.

In case of using the flexible connector, this device can be used only in Japan.

■In case of using the BtoB connector

BtoB connector for connection to external equipment to is the board to board connector, please use a spacer of the height same as the stacking height of the board to board connector (3mm).

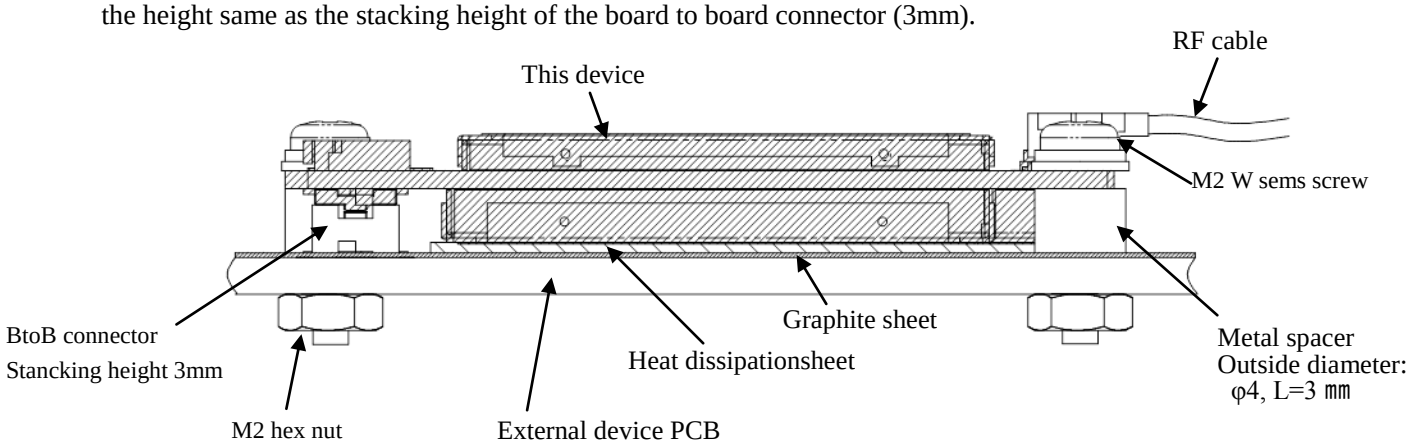

・There not being unnecessary radiation in receive frequency band.
・Shields the sensitive circuit as measure to protect from RF power.
・Use a conductive material. (e.g. PCB, metal chassis, etc.)
for the mounting surface of the external device to enable sufficient heat transfer.
・Do not short-circuit with a ground of the external device side.

In case of using the BtoB connector, this device can be used both in Japan and outside of Japan.

■Antenna connection

Please connect antennas as following figure.

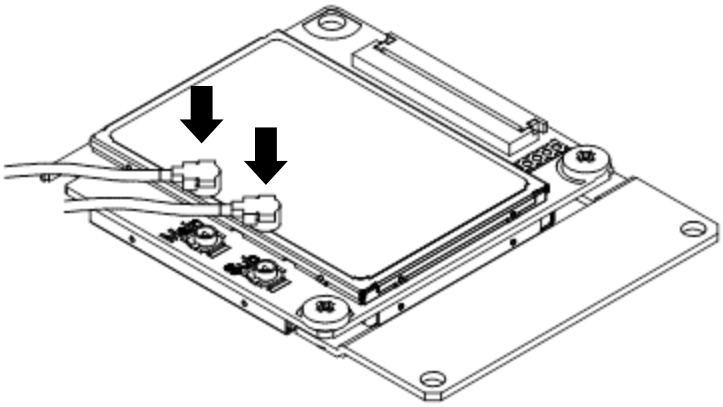

・Do not pull the RF cable with too much force. It may cause damage to the RF connector

・Avoid an excessive twisting action upon connection or disconnection the connector as such an action can cause damage to the connector.

・After connect fit, please do not add load more than that is shown in following figure to a cable.

●Permission load for the cable after the connector fit

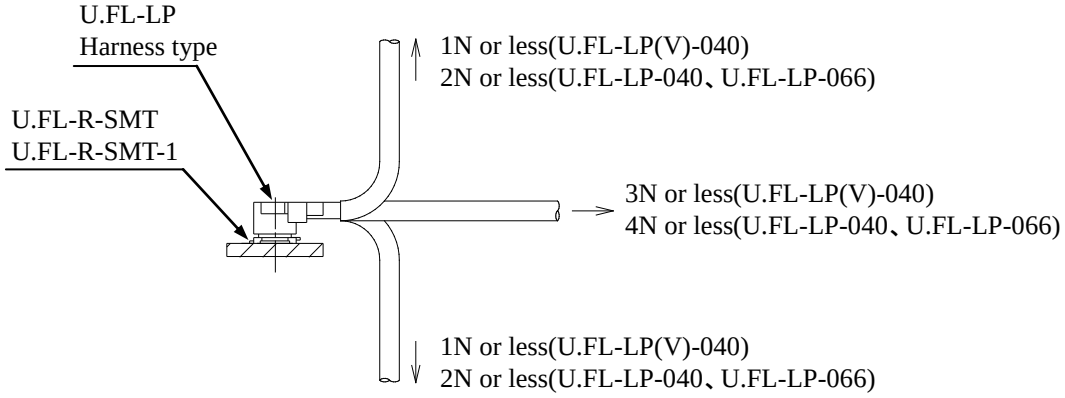

Operation mode

Communication mode

This device supports three communication modes. Only in roaming mode, this device supports the communication method selection function.

●**Supported communication mode**

Communication mode	Description	Remarks
LTE mode (fixed)	Operated in LTE network only in Japan	Default
Roaming mode (fixed)	Operated out of Japan.	[Note1]
Auto selection mode	Select the communication mode (LTE or Roaming) automatically	

[Note1] Only in roaming mode, the communication method can be configuration by AT*KNWMODE.
Communication modes which can be selected are dual of WCDMA+GSM (default), WCDMA single and GSM single.

・If flexible connector is used to connect to the external device, then only LTE mode can be available.
・Communication mode and method can be changed by AT command. And the configuration is stored in this device.
・After the communication mode is changed by AT command, please reboot this device
・This device reports the UE Capability corresponding with the selected communication mode to the network.

●LTE mode

◆Supported communication method : LTE

◆Supported mobile phone career : only NTT DOCOMO

◆Roaming operation : None（Because LTE mode is used only in Japan)

●Roaming mode

◆Supported communication method : WCDMA, GSM
Configuration can be dual of WCDMA+GSM or WCDMA single or GSM single.

◆Supported mobile phone career : Mobile phone career out of Japan

●Auto selection mode

(1)In this mode, this device selects the communication mode automatically.

(2)After this device selects the communication mode automatically, this device holds the communication mode with the selected one, which is LTE mode or roaming mode.

(3)Actual working communication mode in auto selection mode can be confirmed by AT command.

(4)In this mode, this device selects the communication mode only at the time of start timing of this device. It select the communication mode based on the condition of the radio environment (detected mobile phone career).

●Condition to select the communication mode in auto selection mode

No.	Condition of radio environment	Selected mode
1	One or more Japanese mobile phone career is detected	LTE mode
2	Any mobile phone career is not detected	LTE mode
3	Only the mobile phone career out of Japan is detected	Roaming mode

●Precausion

Please note that the following description for the peculiar cases.

(1)In case that communication mode is roaming mode and communication method is dual of WCDMA+GSM or WCDMA single, if Japanese mobile phone career is detected, this device will automatically reset with auto selection mode.

(2)Because the accesses of this device is limited to only DOCOMO network in LTE mode operation, this device never access to other mobile phone career in LTE communication method. If this device moves from inside Japan to outside Japan in LTE mode operation, this device should be reset from the external device to keep operation because this device does not have the function to detect the moving to outside Japan.

(3) If this device moves from outside Japan to inside Japan in roaming mode operation and GSM single method, this device should be reset from the external device to keep operation because this device does not have the function to detect the moving to inside Japan.

Service function

Packet communication

The data communication speed this device supports is 112.5Mbps max for downlink and 37.5Mbps max for uplink in LTE network, and 42.2Mbps max for downlink and 5.7Mbps max for uplink in W-CDMA network , and 237kbps for both downlink and uplink in GSM network.

【Summary of function】

- This device establishes PPP protocol for the external device with the trigger of originating or incoming control by AT command. Then this device carries out the PDP/PDN link connection of radio segment
- This device configures the IP address of the external device using PPP. IPV4 and IPV6 are supported for IP address.
- The interface which the external device can use in packet communication is UART and USB interface. Each interface controls the packet communication independently. The multi PDP connection, that can do the multiple communication in same time, is supported. Multi PDP connection is valid only in operation of LTE communication mode.
- The USB interface provided to the external device is modem type (RAS method) and LAN type (NDIS method).
- The incoming of packet communication incoming is supported only with modem type USB interface. It is not supported with the LAN type USB interface.

■In case of the operation in LTE communication mode

- At least one PDP type and APN must be configured. (The detail of PDP type and APN is described later.)
  Please configure them by AT+CGDCONT.
- The configuration of the peculiar function of LTE communication (packet communication and NDIS automatic connection) is required.
  Please configure it by AT*KALWAYSON.

■In case of the operation in roaming communication mode

- The communication mode of this device must be configured.
  Please configure it by AT*KNWMODE.
- PDP type and APN must be configured before the packet communication.
  Please configure it by AT+CGDCONT.

■PDP type

This device supports two PDP type. They are PDP-Type=PPP and PDP-Type=IP.

In case of PDP-Type=IP, IPv4 and IPv6 can be configured as IP type.

Only IPv4 is supported as static IP address.

PDP-Type=PPP of LAN card type is not supported.

Please configure by AT+CGDCONT to suitable for the customer's environment with considering above condition.

●Supported IP address

PDP-Type	IPv4		IPv6		IPv4v6	
	Static IPaddress	Dynamic IPaddress	Static IPaddress	Dynamic IPaddress	Static IPaddress	Dynamic IPaddress
PPP（pseudo）	○	○	×	×	×	×
IP	○	○	×	○	×	×

○：Supported,　×：Not supported

■APN

In the packet communication, the LAN/ISP in the company to be accessed is appointed in the access point names (APN) instead of phone number, and this device carries out dial-up connection using it. Please register the Access Point Name (APN) for each connection point in this device prior to communication. And then, please appoint the registration number (cid*) as the other party phone number to connect. For the connection to each provider or LAN in the company, it is necessary to register the corresponding APN for each connection point.

The max number of APN can be configured in this device is twenty

Please configure the APN by AT+CGDCONT by terminal software.

At the factory shipment, APN is not configured.

The APN used in mock packet incoming is limited to the APN which corresponds to the CID configured by AT*KALWAYSON

SMS

This device supports the sending, receiving, storage and display of SMS (Short Message Service)

●Supported SMS service

Supported SMS service	Sending/Receiving	Remarks
General text SMS	Sending/Receiving	Supports linked SMS
Notification of SMS delivery information	Receiving	-
Center push SMS	Receiving	-

●Supported SMS service for each communication mode

Supported SMS service	LTE mode	Roaming mode	Remarks
General text SMS	○	○	-
Notification of SMS delivery information	○	○	-
Center push SMS	○	×	-

○:Supported, ×:Not supported

Area Mail

This device can receive earthquake early warning and tsunami warning delivered by the Japan Meteorological Agency and disaster and evacuation information delivered by national and regional public institution.

■Supported Area Mail method

This device supports ETWS method. The ETWS method delivers the Area Mail to the external device faster by using simple information notification.

Method	The process of the notification
ETWS	Notify the warning information by two steps. (two messages) 1. Notify only the simple information (warning for the earthquake and tsunami). 2. Notify the information about the warning by the Area Mail text.

■Supported Area Mail method for each communication mode

Method	LTE mode	Roaming mode	Remarks
ETWS	○	×	-

○:Supported, ×:Not supported

Software update

Software update function is used to update its software via the LTE network to improve the functions of this device after sale.

Because the communication between this device and the server in allocated in DOCOMO network to carry out software update, this function is available only in DOCOMO network.
If other mobile phone career's UIM card is used or this device is used outside of Japan, software update can not be carried out.

■Software update method

This device supports the following two software update methods

(1) Software update from the network (PUSH type software update)

Software update is carried out by receiving the control SMS from server in DOCOMO network.

(2) Software update from the external device (PULL type software update)

Software update is carried out by receiving the AT command "AT*DSWU=0" from the external device.

RF part ON/OFF function

This device has RF part ON/OFF function.
The status of RF part ON/OFF can be changed by AT+CFUN command.

AT command

AT command list

No.	Command	Function
1	ATA	Carry out manual operated incoming response of packet communication。
2	ATD	Carry out originating of packet communication。
3	ATE	Configure the echo existence or nonexistence for the sent command from the external device.
4	ATH	Disconnect the packet communication.
5	ATI	Display the product information about this device
6	ATO	Return to online data mode from online command mode
7	ATQ	Configure existence or nonexistence of result code sending after carrying out of the command
8	ATV	Configure the result code to numeric or English character
9	ATX	Configure the communication speed indication in the CONNECT indication at the time of packet connection
10	ATZ	Overwrite the configuration value of this device to the contents of the non-volatile memory
11	AT&C	Select the behavior of CD line to external device
12	AT&D	Select the behavior of this device by ER line in online data mode
13	AT&F	Initialize the configuration value of this device at the time of the factory shipment
14	AT&W	Store the configuration value of this device to non-volatile memory
15	AT&Z	Initialize the configuration value of this device and the contents of non-volatile memory to factory shipment value
16	ATS0	Configure the number of times of RING until auto answer
17	ATS6	Configure the pose time until dialing
18	ATS7	Configure the wait time for the connection in packet communication after originating
19	ATS8	Configure the pose time (unit: sec) by comma dial.
20	ATS10	Configure the delay time for the automatic disconnection
21	ATS61	Display and reset the number of boot times by PWRKEY
22	ATS64	Display and reset the number of boot times by AT*DHWRST
23	ATS65	Display and reset the number of boot times by SYSRST button
24	AT¥S	Display the present configuration of this device
25	+++	Transfer from online data mode to online command mode
26	AT+GCAP	Display the supported range of AT command
27	AT+GMI	Display the manufacturer of this device
28	AT+GMM	Display the model (product name) of this device
29	AT+GMR	Display the version of this device
30	AT+IFC	Configure the flow control method between the external device and this device
31	AT+IPR	Configure the serial communication speed between the external device and this device
32	AT+CRON	Get the APN of previous incoming of packet communication
33	AT+PNRII	Display the restriction state of the network
34	AT*DANTE	Display the antenna level of this device.
35	AT*DHWRST	Carry out the hardware reset of this device
36	AT*DRPW	Display the indication of received radio wave power for this device
37	AT*DSWU	Carry out start and stop of the software update and confirm the state
38	AT+CCLK	Get the internal time information of this device
39	AT+CEER	Display the reason for previous disconnection of packet communication
40	AT+CGDCONT	Configure the access point name (APN) for packet communication
41	AT+CGMR	Display revision (IMEISV) of this device
42	AT+CGREG	Configure existence or nonexistence of display of +CGREG unsolicited result code in case of transferring to in-service area from out-of-service area during packet communication In addition, confirm the current state of in-service or out-of-service
43	AT+CGSN	Display the production number (IMEI) of this device
44	AT+CLCK	Enable or disable the PIN1 code and display the state of the PIN1 code
45	AT+CMEE	Configure the error report indication of this device
46	AT+CNUM	Display the phone number of the DOCOMO UIM card connected to this device
47	AT+CPAS	Inquire whether this device can send and receive the control signal.
48	AT+CPIN	Verify the PIN1 code and cancel the PIN1 code lock
49	AT+CPWD	Change PIN1 code

50	AT+CR	Configure existence or nonexistence of +CR (unsolicited result) display at the time of packet connection
51	AT+CRC	Configure existence or nonexistence of +CRING (unsolicited result) display at the time of packet incoming
52	AT+CREG	Configure existence or nonexistence of +CREG (unsolicited result) display when the state of circuit switching area transfers from out-of-service area to in-service area In addition, confirm the current state of in-service area or out-of-service area
53	AT+CSCS	Configure the character code used for output and input of SMS and Area Mail to/from the external device
54	AT+CMGD	Delete SMS
55	AT+CMGF	Configure the format of SMS and Area Mail
56	AT+CMGL	Display SMS and Area Mail of appointed state
57	AT+CMGR	Display SMS and Area Mail of appointed stored number
58	AT+CMGS	Send SMS
59	AT+CMGW	Store SMS in DOCOMO UIM card or this device
60	AT+CMSS	Send SMS stored in the memory
61	AT+CNMA	Notify the reception result to network at the time of receiving SMS
62	AT+CNMI	Configure the notification method at the time of receiving SMS and Area Mail
63	AT+CPMS	Configure the memory used for displaying, deleting and storing SMS and Area Mail
64	AT+CSCA	Configure SMS center number
65	AT+CSDH	Configure existence or nonexistence of indication of the detailed header information in the TEXT mode
66	AT+CSMP	Configure the parameter to send SMS in TEXT mode (AT+CMGF=1)
67	AT+CSMS	Configure the additional process of SMS message service
68	AT*DCHKLOC	Confirm radio wave environment at the time of the antenna setting
69	AT*DCHKANT	Display the condition whether communication is possible
70	AT*DPWROFF	Stop this device
71	AT*DTELNUM	Link the APN to the phone number and register them
72	AT*DCMGS	Send SMS directly
73	AT*DMEMFULL	Notify that SMS can not be received because of lack of stored area (memory full)
74	A/	Carry out again the previous carried out command
75	AT&P	Display the phone number stored in DOCOMO UIM card
76	AT!	Display the status of present this device
77	AT+CGACT	Carry out the connection and disconnection of NDIS. Display the use condition for the CID configured by AT+CGDCONT
78	AT*KDEGSET	Configure the indication of the temperature in case that temperature becomes higher than the threshold.
79	AT*KDEG	Display the temperature of this device
80	AT+CFUN	Configure the ON/OFF of the RF part
81	AT+CEREG	Configure the indication of in-service or out-of-service for the LTE network
82	AT*KNWMODE	Configure the communication method
83	AT*KATMODE	Configure the operation mode of AT command
84	AT*KICCID	Display the identification number with 19 digits (ICCID) of UIM
85	AT*DLANTE	Display the LTE antenna level of this device.
86	AT*KINDSET	Configure the identification of SMS receiving, Area Mail receiving and arrival to the threshold temperature by the signal line
87	AT*KMIMO	Configure the MIMO or not MIMO receiving
88	AT+COPS	Configure the PLMN (MCC + MNC) in roaming mode operation
89	AT*KCMGR	Display the linked SMS
90	AT*KCMGD	Delete the linked SMS
91	AT*KCNMI	Configure the indication method at the time of linked SMS receiving
92	AT*KNDIS	Configure the parameter of manual NDIS connection
93	AT*KALWAYSON	Configure the parameter of Always-ON connection

FCC Regulatory notices

Modification statement

“Hitachi Kokusai Electric Inc.” has not approved any changes or modifications to this device by the user. Any changes or modifications could void the user’s authority to operate the equipment.

Interference statement

This device complies with Part 15 of the FCC Rules. Operation is subject to the following two conditions: (1) this device may not cause interference, and (2) this device must accept any interference, including interference that may cause undesired operation of the device.

Wireless notice

This equipment complies with FCC radiation exposure limits set forth for an uncontrolled environment. The antenna should be installed and operated with minimum distance of 20 cm between the radiator and your body. Antenna gain must be as below:

Frequency band	Maximum antenna gain
GSM 850/FDD V	3.42 dBi
PCS 1900	2.01 dBi

This transmitter must not be co-located or operating in conjunction with any other antenna or transmitter.

FCC Class B digital device notice

This equipment has been tested and found to comply with the limits for a Class B digital device, pursuant to part 15 of the FCC Rules. These limits are designed to provide reasonable protection against harmful interference in a residential installation. This equipment generates uses and can radiate radio frequency energy and, if not installed and used in accordance with the instructions, may cause harmful interference to radio communications. However, there is no guarantee that interference will not occur in a particular installation. If this equipment does cause harmful interference to radio or television reception, which can be determined by turning the equipment off and on, the user is encouraged to try to correct the interference by one or more of the following measures:

- Reorient or relocate the receiving antenna.
- Increase the separation between the equipment and receiver.
- Connect the equipment into an outlet on a circuit different from that to which the receiver is connected.
- Consult the dealer or an experienced radio/TV technician for help.

Labelling Requirements for the Host device

The host device shall be properly labelled to identify the modules within the host device. The certification label of the module shall be clearly visible at all times when installed in the host device, otherwise the host device must be labelled to display the FCC ID of the module, preceded by the words "Contains transmitter module", or the word "Contains", or similar wording expressing the same meaning, as follows:

Contains FCC ID: TTIUM04KO

1999/5/EC Directive regulatory notices

This device has been evaluated against the essential requirements of the 1999/5/EC Directive.

Bulgarian	С настоящето ““Hitachi Kokusai Electric Inc.” декларира, че ““UM04-KO”отговаря на съществените изисквания и другите приложими изисквания на Директива 1999/5/EC.
Croatian	Ovime “Hitachi Kokusai Electric Inc.”, izjavljuje da je ovaj “UM04-KO” je u skladu s osnovnim zahtjevima i drugim relevantnim odredbama Direktive 1999/5/EC.
Czech	““Hitachi Kokusai Electric Inc.” tímto prohlašuje, že tento ““UM04-KO”je ve shodě se základními požadavky a dalšími příslušnými ustanoveními směrnice 1999/5/ES.
Danish	Undertegnede ““Hitachi Kokusai Electric Inc.” erklærer herved, at følgende udstyr ““UM04-KO”overholder de væsentlige krav og øvrige relevante krav i direktiv 1999/5/EF.
Dutch	Hierbij verklaart ““Hitachi Kokusai Electric Inc.” dat het toestel ““UM04-KO”in overeenstemming is met de essentiële eisen en de andere relevante bepalingen van richtlijn 1999/5/EG.
English	Hereby, ““Hitachi Kokusai Electric Inc.”, declares that this ““UM04-KO”is in compliance with the essential requirements and other relevant provisions of Directive 1999/5/EC.
Estonian	Käesolevaga kinnitab ““Hitachi Kokusai Electric Inc.” seadme ““UM04-KO”vastavust direktiivi 1999/5/EÜ põhinõuetele ja nimetatud direktiivist tulenevatele teistele asjakohastele sätetele.
German	Hiermit erklärt ““Hitachi Kokusai Electric Inc.”, dass sich das Gerät ““UM04-KO”in Übereinstimmung mit den grundlegenden Anforderungen und den übrigen einschlägigen Bestimmungen der Richtlinie 1999/5/EG befindet.
Greek	ΜΕ ΤΗΝ ΠΑΡΟΥΣΑ ““Hitachi Kokusai Electric Inc.” ΔΗΛΩΝΕΙ ΟΤΙ ““UM04-KO”ΣΥΜΜΟΡΦΩΝΕΤΑΙ ΠΡΟΣ ΤΙΣ ΟΥΣΙΩΔΕΙΣ ΑΠΑΙΤΗΣΕΙΣ ΚΑΙ ΤΙΣ ΛΟΙΠΕΣ ΣΧΕΤΙΚΕΣ ΔΙΑΤΑΞΕΙΣ ΤΗΣ ΟΔΗΓΙΑΣ 1999/5/ΕΚ.
Hungarian	Alulírott, ““Hitachi Kokusai Electric Inc.” nyilatkozom, hogy a ““UM04-KO”megfelel a vonatkozó alapvetõ követelményeknek és az 1999/5/EC irányelv egyéb elõírásainak.
Finnish	““Hitachi Kokusai Electric Inc.” vakuuttaa täten että ““UM04-KO”tyyppinen laite on direktiivin 1999/5/EY oleellisten vaatimusten ja sitä koskevien direktiivin muiden ehtojen mukainen.
French	Par la présente ““Hitachi Kokusai Electric Inc.” déclare que l'appareil ““UM04-KO”est conforme aux exigences essentielles et aux autres dispositions pertinentes de la directive 1999/5/CE.
Icelandic	Hér með lýsir ““Hitachi Kokusai Electric Inc.” yfir því að ““UM04-KO”er í samræmi við grunnkröfur og aðrar kröfur, sem gerðar eru í tilskipun 1999/5/EC
Italian	Con la presente ““Hitachi Kokusai Electric Inc.” dichiara che questo ““UM04-KO”è conforme ai requisiti essenziali ed alle altre disposizioni pertinenti stabilite dalla direttiva 1999/5/CE.
Latvian	Ar šo ““Hitachi Kokusai Electric Inc.” deklarē, ka ““UM04-KO”atbilst Direktīvas 1999/5/EK būtiskajām prasībām un citiem ar to saistītajiem noteikumiem.
Lithuanian	Šiuo ““Hitachi Kokusai Electric Inc.” deklaruoja, kad šis ““UM04-KO”atitinka esminius reikalavimus ir kitas 1999/5/EB Direktyvos nuostatas.
Maltese	Hawnhekk, ““Hitachi Kokusai Electric Inc.”, jiddikjara li dan ““UM04-KO”jikkonforma mal-ħtiġijiet essenzjali u ma provvedimenti oħrajn relevanti li hemm fid-Dirrettiva 1999/5/EC.
Norwegian	““Hitachi Kokusai Electric Inc.” erklærer herved at utstyret ““UM04-KO”er i samsvar med de grunnleggende krav og øvrige relevante krav i direktiv 1999/5/EF.
Polish	Niniejszym ““Hitachi Kokusai Electric Inc.” oświadcza, że ““UM04-KO”jest zgodny z zasadniczymi wymogami oraz pozostałymi stosownymi postanowieniami Dyrektywy 1999/5/EC
Portuguese	““Hitachi Kokusai Electric Inc.” declara que este ““UM04-KO”está conforme com os requisitos essenciais e outras disposições da Directiva 1999/5/CE.
Slovak	““Hitachi Kokusai Electric Inc.” týmto vyhlasuje, že ““UM04-KO”spĺňa základné požiadavky a všetky príslušné ustanovenia Smernice 1999/5/ES.
Slovenian	““Hitachi Kokusai Electric Inc.” izjavlja, da je ta ““UM04-KO”v skladu z bistvenimi zahtevami in ostalimi relevantnimi določili direktive 1999/5/ES.
Spanish	Por medio de la presente ““Hitachi Kokusai Electric Inc.” declara que ““UM04-KO”cumple con los requisitos esenciales y cualesquiera otras disposiciones aplicables o exigibles de la Directiva 1999/5/CE.
Swedish	Härmed intygar ““Hitachi Kokusai Electric Inc.” att denna ““UM04-KO”står I överensstämmelse med de väsentliga egenskapskrav och övriga relevanta bestämmelser som framgår av direktiv 1999/5/EG.

In order to satisfy the essential requirements of 1999/5/EC Directive, the product is compliant with the following standards:

RF spectrum use (R&TTE art. 3.2)	EN 301 511 V9.0.2 EN 301 908-1 V6.2.1 EN 301 908-2 V6.2.1 EN 301 908-13 V6.2.1
EMC (R&TTE art. 3.1b)	EN 301 489-1 V1.9.2 EN 301 489-7 V1.3.1 EN 301 489-24 V1.5.1
Health & Safety (R&TTE art. 3.1a)	EN 60950-1:2006 + A11:2009 + A1:2010 + A12:2011 + AC:2011 + A2: 2013

The conformity assessment procedure referred to in Article 10 and detailed in Annex IV of Directive 1999/5/EC has been followed with the involvement of the following Notified Body:

AT4 wireless, S.A.
Parque Tecnologico de Andalucía
C/ Severo Ochoa 2
29590 Campanillas – Málaga
SPAIN
Notified Body No: 1909

Thus, the following marking is included in the product:

CE 1909

There is no restriction for the commercialization of this device in all the countries of the European Union.

Final product integrating this module must be assessed against essential requirements of the 1999/5/EC (R&TTE) Directive. It should be noted that assessment does not necessarily lead to testing. Hitachi Kokusai Electric Inc. recommends carrying out the following assessments:

RF spectrum use (R&TTE art. 3.2)	It will depend on the antenna used on the final product.
EMC (R&TTE art. 3.1b)	Testing
Health & Safety (R&TTE art. 3.1a)	Testing