EX-r Series GigE

Digital Microwave Radios

Installation and Management Guide

Models:

EX-4.5r GigE

EX-4.5r-c GigE

EX-5r GigE

EX-5r-c GigE

201872-004
2016-05-26

Legal Notice

The information contained herein is the property of Exalt Wireless, Inc. ("Exalt") and is supplied without liability for errors or omissions. No part of this document may be reproduced, in any form, except as authorized by contract or other written permission from the owner.

Any brand names and product names included in this manual are trademarks, registered trademarks, or trade names of their respective holders.

The contents of this document are current as of the date of publication. Exalt reserves the right to change the contents without prior notice.

The publication of information in this document does not imply freedom from patent or other rights of Exalt or others.

© 2015 Exalt Wireless Inc. All rights reserved.

The Exalt logo, ExtremeAir, and ExploreAir are registered trademarks of Exalt Wireless, Inc.

Open-Source License Information

Per the terms of your Exalt Limited Hardware Warranty, Software License, and RMA Procedures Agreement with Exalt Wireless, Inc. and/or its subsidiaries, certain Third Party Software may be provided with and as part of the Exalt products provided to you, and any such Third Party Software files provided are governed by the terms of their separate Third Party Licenses, which licenses give you at least the license rights licensed to you in the Exalt End User Agreement and may give you additional license rights as to the Third Party Software, but only with respect to the particular Third Party Software to which the Third Party License applies.

The Exalt Products may include or be bundled with some or all of the following third party software. Copies of the copyright notices and license agreements for any or all of these may be requested by contacting Exalt support at email: support@exaltcom.com.

Open Source Code	License Agreement	Website
Embedded Linux - OS U-Boot	Boot Code. Both licensed under GPL Version 3	www.gnu.org www.sourceforge.net
Busy Box	Linux Commands. Licensed under GPL Version 2	www.gnu.org and www.busybox.net
Scew	Expat Wrapper. Licensed under LGPL Version 3	www.gnu.org
OpenSSL	SSL Web Access. Licensed under dual license	www.openssl.org
Net-SNMP	SNMP Agent. Licensed under NetSNMP (see Copyright Notices)	
Dropbear	SSH 2 Server; Expat - XML Parser; BarelyFitz – Java Script Tabifier; and Flotr – Java Script Plotting Library. All four are licensed under MIT License	www.opensource.org/licenses/mit-license.php
GoAhead Webserver	Licensed under GoAhead License Agreement	www.goahead.com

Table of Contents

Legal Notice . . . ii
Open-Source License Information . . . ii
List of Figures . . . vi
List of Tables . . . vii
About this Document . . . viii
Revision History . . . viii
Icons . . . viii
Introduction . . . 1
Related Documentation and Software . . . 1
The EX-r Series GigE Digital Microwave Radios . . . 1
Basic Features . . . 3
Pre-installation Tasks . . . 6
Link Engineering and Site Planning . . . 6
Familiarization with the EX-r Series GigE Radios . . . 6
Shipping Box Contents . . . 7
Initial Configuration and Back-to-Back Bench Test . . . 8
RF Output Power Setting . . . 9
Time Division Duplex (TDD) Factors . . . 9
Link Orientation and Synchronization . . . 10
Radio A/B Configuration . . . 11
Radio Reset . . . 12
Radio Synchronization . . . 12
Synchronization Modes . . . 12
Internal Synchronization . . . 13
External Synchronization . . . 14
Offset Timing . . . 15
When Sync is Lost . . . 15
Virtual Local Area Network (VLAN) . . . 16
Link Symmetry . . . 16
Simple Network Management Protocol (SNMP) . . . 17
System Installation and Initiation Process . . . 19
Record Keeping . . . 20
Installation . . . 21
Mechanical Configuration and Mounting . . . 21
Mounting the System . . . 21
Radio Ports and Indicators . . . 22
Connector Overview . . . 23
LED Indicators . . . 24
Power . . . 25
Terminating the RF Connectors (EX-4.5r-c GigE and EX-5r-c GigE) . . . 25
AC Power . . . 25
Power Injector . . . 26
Lightning/Surge Protection . . . 27
Reset to Critical Factory Settings . . . 27
Antenna/Transmission System . . . 27
Initial Antenna Mounting (EX-4.5r-c GigE and EX-5r-c GigE) . . . 28

Transmission Line from Antenna to Radio (EX-4.5r-c GigE and EX-5r-c GigE) 29
Indoor Mounting 30
RF Lightning Arrestor 30
Antenna Alignment 31
Configuration and Management 32
Telnet into the Command Line Interface (CLI) 32
Connect to the Radio in a Telnet Session 32
Telnet 32
Exalt Graphical User Interface (GUI) 33
Preparing to Connect 33
Make Connections 33
Log In 34
Login Privileges 34
Quick Start 35
Navigating the GUI 36
Summary Status Section 37
Navigation Panel 37
Radio Information Page 39
Administration Settings Page 40
Simple Network Management Protocol (SNMP) Configuration 42
SNMP v1/v2c/v3 Support Options 43
SNMP Traps 43
File Transfer Page 45
File Activation Page 48
System Configuration Page 49
Ethernet Interface Configuration Page 54
VLAN Configuration Page 55
T1/E1 Configuration Pages 57
T1 Interface Configuration Page 57
E1 Interface Configuration Page 58
T1/E1 Loopback 59
GPS Information Page 60
Alarms Page 61
Performance Page 63
Event Log Page 65
Diagnostic Charts Page 66
Spectrum Analyzer Page 68
Reboot Page 70
Manual Page 71
Specifications 72
Physical Specifications 72
Integrated Antenna Models 72
Connectorized Antenna Models 72
Common System Specifications 73
System Specifications, 4.5GHz Band 74
System Specifications, 5.3GHz Band 75
System Specifications, 5.4GHz Band 76

System Specifications, 5.8GHz Band . . . 77
Interfaces . . . 78
Interface Connections . . . 79
TDM Connections . . . 79
RSL & Sync In Connector . . . 80
Power/Ethernet Connector . . . 81
Ethernet 2 Connector . . . 81
Antennas . . . 82
Troubleshooting . . . 84
General Practices . . . 84
Typical Indications of Issues . . . 85
Improper RF Cable Termination . . . 86
Multipath Propagation . . . 86
RF Interference . . . 86
Path Obstruction . . . 87
Misaligned Antenna . . . 87
Faulty Antenna (EX-4.5r-c GigE and EX-5r-c GigE) . . . 87
Improper Grounding . . . 87
Insufficient Link Margin . . . 88
Moisture in the Transmission System . . . 88
Back-to-back Bench Testing . . . 89
Basic Test . . . 89
Specification Performance Verification . . . 90
General Compliance and Safety . . . 91
Dynamic Frequency Selection . . . 92
Safety Notices . . . 93
Regulatory Notices . . . 94
United States Compliance . . . 94
Federal Communications Commission (FCC), United States . . . 94
Canada Compliance . . . 95
Industry Canada (IC), Canada . . . 95
Antennas Supported in Canada . . . 95
Europe and ITU Country Compliance . . . 95
Regulatory Compliance . . . 97
Regulatory Domain Keys . . . 99
EIRP Limits for the United States and Canada . . . 100
EX-5r Series EIRP for the US and Canada . . . 100
5250–5350 MHz Band . . . 100
5470–5725 MHz Band . . . 100
5725–5850 MHz Band . . . 100
EIRP Limits for Australia . . . 101
EX-5r Series EIRP for Australia . . . 101
5470–5725 MHz Band . . . 101
5725–5850 MHz Band . . . 101
EIRP Limits for the European Union and ITU Countries . . . 102
EX-5r Series EIRP . . . 102
5250–5350 MHz band . . . 102

5470–5725 MHz band 102
5725–5850 MHz band 103
Declaration of Conformity to the R&TTE Directive 1999/5/EC 105
EU WEEE 105
EU RoHS 106
Copyright Notices 107
END USER AGREEMENT 112
Index 117

List of Figures

Figure 1 Exalt EX-5r GigE (integrated antenna model) 2
Figure 2 Cabling—integrated antenna model 4
Figure 3 Cabling—external antenna model 4
Figure 4 Basic radio interconnectivity using internal synchronization 13
Figure 5 Collocated radios, one in AUTO SYNC mode to provide redundancy 13
Figure 6 Multiple-link site configuration, using AUTO SYNC for redundancy 13
Figure 7 GPS as primary sync source using AUTO SYNC 14
Figure 8 Synchronized GPS sources using AUTO SYNC 15
Figure 9 Radio installation tasks 19
Figure 10 Pole-mount example 21
Figure 11 EX-r Series GigE pole and wall mount (with azimuth and elevation adjustment) 22
Figure 12 EX-5r-c GigE pole/wall mount 22
Figure 13 EX-r Series GigE connectors 23
Figure 14 Power injector connectors 26
Figure 15 CLI main menu 32
Figure 16 Initiating the browser connection 34
Figure 17 Browser Login screen 34
Figure 18 Radio Information page 35
Figure 19 Exalt GUI window description 36
Figure 20 Summary status information 37
Figure 21 Radio Information page 39
Figure 22 Administration Settings page 40
Figure 23 SNMP Configuration page 42
Figure 24 Trap Configuration page 43
Figure 25 File Transfer page 45
Figure 26 File Transfer page—download file link 46
Figure 27 File Activation page 48
Figure 28 System Configuration page 49
Figure 29 Ethernet Interface Configuration page 54
Figure 30 VLAN Configuration page 55
Figure 31 T1 Interface Configuration page 58
Figure 32 E1 Interface Configuration page 58
Figure 33 External (remote) loopback 59
Figure 34 External (local) loopback 59
Figure 35 Internal loopback 59
Figure 36 GPS Information page 60
Figure 37 Alarms page 61
Figure 38 Performance page 63
Figure 39 Event Log page 65

Figure 40 Diagnostic Charts page 66
Figure 41 Spectrum Analyzer page 68
Figure 42 Spectrum analyzer graph example 69
Figure 43 Reboot page 70
Figure 44 Manual page 71
Figure 45 EX-r Series GigE connector orientation 79
Figure 46 TDM connectors 79
Figure 47 RSL & Sync In connector 80
Figure 48 Power/Ethernet connector 81
Figure 49 Basic back-to-back bench test configuration 89

List of Tables

Factory default settings 11
Connectors 23
LED indicators 24
Recommended transmission line 29
Default login information 34
Alarm status indicators 61
Supported antennas 82
Product Approvals 97
Regulatory Domain Keys 99
EU and ITU Country Specific EIRP Levels for EX-5r Series 104

About this Document

This manual provides a complete description of the EX-r Series GigE Digital Microwave Radios and related software. This manual provides planners, engineers, installers, system administrators, and technicians general and specific information related to the planning, installation, operation, management, and maintenance of these devices.

Revision History

Date	Products and Release code--
2006-09-19	EX-5r & EX-5r-c v.1.0.0
2007-02-19	EX-4.9r v1.0
2007-02-23	EX-5r and EX-5r-c v.2.0.0 (GPS, Sync, SNMP feature release)
2007-04-20	EX-4.9r v.1.1 (AES feature release)
2007-07-27	EX-5r IP and EX-5r-c IP v 2.1.0 EX-5r and EX-5r-c v.2.1.0 (Regulatory Domain Key, Base License Key, and Dynamic Frequency Selection feature releases)
2007-10-26	EX-5r, EX-5r-c, EX-5r-c IP v3.0 (Spectrum Analyzer, VLAN, Asymmetry, Legacy SNMP and Enhanced Event Log feature releases)
2008-03-08	New chassis release
2008-05-23	EX-5r GigE & EX-5r-c GigE v1.0.0
2009-05-26	EX-4.5r/r-c GigE release. v1.0.0
2015-10-15	Updated to include current contact information.

Icons

The following icons denote specific types of information:

Note: This symbol means take note. Notes contain helpful suggestions or references to materials not contained in the manual.

Warning! This warning symbol means there is a risk of electric shock. This situation that could cause bodily injury. Before working on any equipment, be aware of the hazards involved with electrical circuitry and be familiar with standard practices for preventing accidents.

Caution! This symbol means be careful. There is a risk of doing something that might result in equipment damage or loss of data. This is a general warning, caution, or risk of danger.

Introduction

Exalt Wireless, Inc. thanks you for your purchase. Our goal is to build the highest quality, highest reliability digital microwave radio products. This commitment to quality and reliability extends to our employees and partners alike. We appreciate any comments on how we can improve our products, as well as your sales and Customer Care experience.

Customer Care Hotline (USA):	(408) 740-3622
Toll-Free Customer Care Hotline (USA):	(844) EXALT-01 (392-5801)
Website:	www.exaltcom.com
Sales e-mail:	sales@exaltcom.com
Customer Care e-mail:	support@exaltcom.com
Mailing Address:	Exalt Wireless, Inc. 530 Division Street Campbell, CA 95008 USA

Related Documentation and Software

This manual makes reference to other documentation and software files that may be necessary. To access all documents and software mentioned in this manual visit:

http://login.exaltcom.com/

You must have a user account to view all downloads. Follow the online instructions to create a user account and request access.

The EX-r Series GigE Digital Microwave Radios

The EX-r Series GigE Exalt Digital Microwave Radios are the most advanced carrier-class point-to-point terrestrial radio communications devices operating in the 4400 to 4900 or 5250 to 5850MHz frequency band. The EX-r Series GigE radios are available in the following configurations:

- EX-5r GigE and EX-4.5r GigE have an integrated software selectable dual-polarization antenna
- EX-5r-c GigE and EX-4.5r-c GigE external antenna connectors, which allow connection of a dual-polarized antenna (with software selectable polarization)

The EX-r Series GigE radios connect voice and/or digital data from one location to another, obviating the need for copper or fiber connectivity, or enhancing existing connectivity by providing a redundancy solution, a primary solution, and/or additional capacity. Figure 1 shows the Exalt EX-5r GigE digital microwave radio.

Figure 1 Exalt EX-5r GigE (integrated antenna model)

The EX-r Series GigE radios require a clear line-of-sight and proper path clearance to achieve a high-performance, reliable connection. Perform professional path engineering and site planning *before* installing this equipment.

The primary focus of this document is the installation and maintenance of the digital microwave radio, and assumes that path engineering and site planning has already been performed.

The EX-5r GigE, and EX-5r-c GigE radios utilize radio frequencies in the 5250 to 5850 MHz range. In most countries these frequency bands are considered as 'license-exempt' or 'unlicensed.' This means that virtually any user may use these frequencies freely, without paying for access, or any type of pre-notification, post-notification or registration. As a result of this designation, users may also move or change these systems at any time, with significant flexibility to the location, orientation and configuration of the system. However, due also to this designation, there may be uncontrolled interference from other similar devices that occupy this spectrum. In these cases, it is up to engineering and maintenance personnel to design the system with existing and future interference sources in mind, recognizing that there is a chance that the interference conditions could be very dynamic, and outages may occur on the system as a result, and that, in some very rare cases, the system may cause interference into another system and may be required to be disengaged or modified/re-oriented to eliminate the interference.

If the spectrum in your country is designated as 'license-exempt' or similar, this does not infer that the installer may configure the system in **any** manner at **any** location. In most cases, there are regulations, or device-based conditions that limit the use of the device, such as maximum gain antenna, antenna types and maximum output power, as well as, in some cases, application limits, limited geography of use, and other unique regulations. **The link design engineer and/or professional installer must determine these limitations and engineer/install the system within the confines of all local regulations.** Also, it is required to examine any regulations that may apply to peripheral equipment, installation and cabling of the system that may be regulated for human safety, electrical code, air-traffic control, and other safety-related categories.

In certain countries, the spectrum for this product is **NOT** considered to be license-exempt. In these cases, there may be additional regulatory requirements concerning the location, frequency, power, orientation, configuration, and other aspects of the system, including, in some cases, a need for link registration, coordination, and fees that may apply to the system usage. Please consult your local regulatory organization(s) to determine usage requirements.

The EX-4.5r GigE and EX-4.5r-c GigE operate in the 4400 to 4900 MHz band, which is generally reserved for Government operators, such as NATO. In most cases, this band is considered licensed and restricted to certain users.

In almost all cases, either for license-exempt or other designation, the product itself must be authorized for use in your country. Either Exalt or Exalt's agent must have applied for certification or authorization to allow the sale and deployment of the system within the country. It is also possible that only certain versions or configurations of the device are allowed within a particular country. Please contact Exalt or your authorized Exalt representative for information pertaining to your country.

Note: It is the (professional) installer's responsibility to ensure that the radio system is implemented in a legal fashion. Exalt is not liable for any unsafe or illegal installations.

Basic Features

The EX-r Series GigE Digital Microwave Radios are intended for all-outdoor mounting and come with an indoor-mounted power injector. In some cases, the radio can be mounted indoors or in an enclosure. Depending on the configuration purchased, the associated antenna is either integrated as part of the unit or connected separately.

For the integrated antenna model, the entire unit is typically mounted on a tower or rooftop mast structure, with Ethernet/Power and other optional interface cables running from the unit location, through a structure penetration, and to the power injector and connected communications equipment.

For the external antenna model, the unit is typically mounted very close to the external antenna to minimize RF cabling and associated losses. Alternatively, the unit can be mounted at an easily accessible location with longer RF cabling to the antenna. Proper lightning or surge suppression devices and associated grounding are required for all connections.

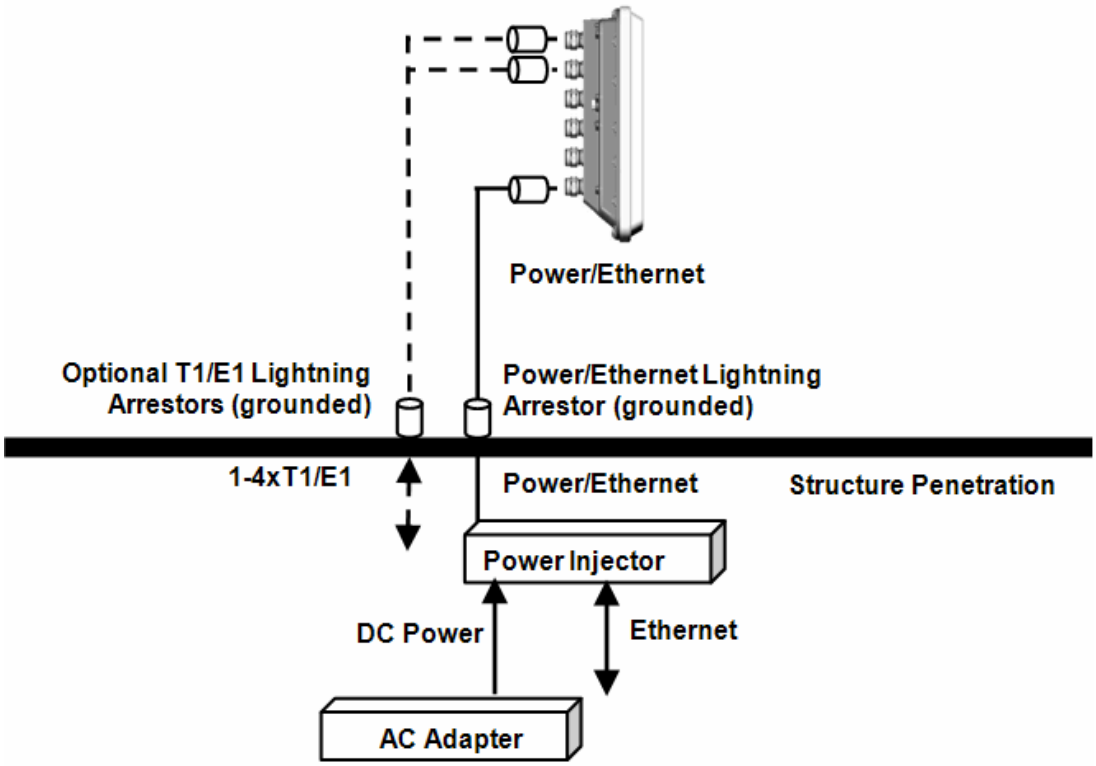

Figure 2 Cabling—integrated antenna model

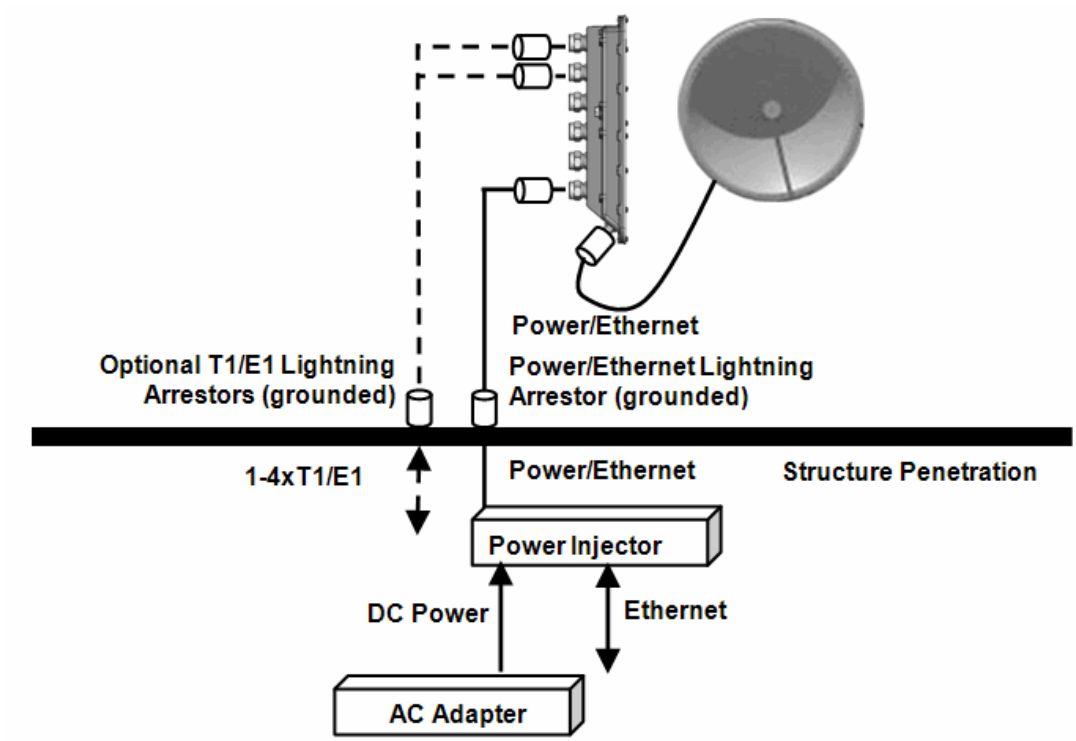

Figure 3 Cabling—external antenna model

For highest performance and reliability, it is advised to minimize the length of RF cable and associated transmission system losses between the antenna and the radio's antenna port.

The EX-r Series GigE radios provide connections for a combination of the following data communication interfaces:

- 10/100/1000BaseT Ethernet
- 4xT1/E1 interfaces for synchronous voice traffic

The EX-r Series GigE radios are powered by a combined Power/Ethernet cable, and associated power injector. The power injector provides 48VDC to the unit.

The EX-r Series GigE radios provide the following primary features and benefits:

- Low-latency optimization and control for voice and data connections
- Very high throughput and flexible interface configurations with voice+data combinations
- Encryption for extreme wireless security
- Easy-to-use management and configuration
- Flexible utilized channel bandwidth selection for interference avoidance and frequency coordination
- Flexible center frequency tuning for interference avoidance and frequency coordination
- Flexible capacity to meet current connection requirements and future growth needs
- Carrier-class reliability and performance
- Connector covers (for covering and securing unused connectors)

Pre-installation Tasks

This section describes the steps necessary to prepare a site for the installation of the Exalt Digital Microwave Radio.

Link Engineering and Site Planning

Design all terrestrial wireless links prior to purchase and installation. Generally, professional wireless engineering personnel are engaged to determine the viability and requirements for a well-engineered link to meet the users' needs for performance and reliability.

The reader is referred to the Exalt document, *Guidance for Engineering and Site Planning of Terrestrial Wireless Links* and the *ExaltCalc* path calculator. This document and calculator aid in the pre-planning and engineering required to determine following attributes:

- Antenna type gain at each end of the link
- Antenna mounting height/location for proper path clearance
- Antenna polarization orientation
- RF cabling type, length, connectors, route, and mounting
- Antenna system grounding
- Lightning arrestor type(s), location(s), and grounding
- Radio mounting location and mechanisms
- Radio grounding
- Radio transmitter output power setting
- Anticipated received signal level (RSL) at each end
- Anticipated fade margin and availability performance at each end
- Radio settings for TDD frame length and occupied bandwidth
- Anticipated throughput performance (TDM circuit support and Ethernet)
- Anticipated system latency

With respect to radio path and site planning, these radios are generally identical to other microwave terrestrial wireless systems. Engineering of these systems requires specific knowledge about the radios, including:

- RF specifications (transmitter output power, receiver threshold, occupied channel bandwidth, and carrier-to-interference)
- Regulatory limitations on transmitter output power setting and antenna type/gain
- Noise/interference profile for the intended location

Familiarization with the EX-r Series GigE Radios

The EX-r Series GigE radios utilize time division duplex (TDD) radio transmission. This means that the transmitted signal in both directions uses the same center frequency and transmits in one direction for a period of time, and then in the opposite direction for another period of time. This total period of time is referred to as the *frame length* or *TDD frame length*, and is further discussed in Time Division Duplex (TDD) Factors.

The two radio terminals are identical hardware, except for the TDD setting in software. When the radios are in their default state, both radios are configured as Radio B. **One end of the link must be configured as Radio A before the two ends of the radio system can communicate.**

It can be considered that Radio A is the primary radio in the link. Radio A provides the master clock and control to Radio B. For most applications, it is not important how the radio link is oriented, only that one end is configured for Radio A and the other for Radio B. For some applications (such as, multi-radio hub sites or repeaters), the orientation of the radio systems may be more critical. See Link Orientation and Synchronization for details.

There are two ways to configure the radios for Radio A/B determination:

- Use the Exalt browser-based graphical user interface (GUI) – preferred.
- Connect to the radio using Telnet.

Exalt recommends using the Exalt GUI for radio configuration. This interface requires a computer with an Ethernet port and web browser software, such as Microsoft Internet Explorer 5.0 or above. See Configuration and Management for details on how to connect to and use the browser-based GUI interface.

Shipping Box Contents

Unless purchased as a spare terminal, the radios are shipped as a complete *hop* (that is, a radio link pair consisting of two terminals). An outer box has labeling that indicates the contents of the box, with the part number and serial number details for both radio terminals.

Inside the outer box are two identical boxes, each of these boxes is also marked with the part number and serial number of the individual terminal contained inside the box. The terminal box contains the following items:

- Radio terminal (configured as Radio B)
- AC adapter
- Power injector
- Mounting kit (for pole or wall mounting)
- Accessory kit
  - Grounding screw/washers
  - Weather-sealing tape (required for RF connectors on the EX-5r-c GigE)
  - RF connector cover (for the EX-4.5r-c GigE or EX-5r-c GigE covering the unused RF connector, where applicable)
  - RSL adapter cable
- Registration card
- Quick-start guide

Inspect the outer packaging and the contents of the boxes upon receipt. If you suspect any shipping damage or issues with the contents, contact Exalt Customer Care.

Note: Register your system as soon as possible. A 2-year Warranty period applies to products registered within 90 days of purchase. The Warranty period is reduced to 1-year for unregistered products and products registered after the first 90 days.

The radio terminal boxes contain a single pre-terminated PoE cable intended for bench testing and to make the short connection between the radio and the PoE lightning arrestor near the radio. If running a longer cable from the radio to the PoE lightning protector (such as at the egress point), use pre-terminated cables (sold separately). Pre-terminated cables are available in different lengths to meet a variety of applications, and can also be used for the T1/E1 connections (where applicable).

Initial Configuration and Back-to-Back Bench Test

Every Exalt digital microwave radio goes through extensive quality testing and performance evaluation over the full operating temperature range prior to shipment. However, before installation, it is strongly advised to perform several tests and tasks that are much more difficult to perform once the radio link endpoints are distant from one another. A back-to-back bench test and pre-configuration will provide confidence that the radio link is operational and properly configured *prior* to installation, so that if troubleshooting is necessary, the radio hardware and configuration settings are eliminated from the troubleshooting process. Verify the following in the back-to-back testing:

- Confirm that the radio system is generally operational
  - Radios power-up with planned power and wiring solutions
  - Regulatory Domain Key (RDK) entry successful

Note: Exalt radios with the RDK function are DISABLED when initially shipped. To ENABLE the radio, a valid RDK must be entered on the Administration Settings Page page of the Exalt GUI. The RDK references the unit's serial number and is provided based on the country and/or region where the radio system will be deployed. The RDK is obtained through your Exalt Authorized distributor or reseller.

  - RF link connects in both directions
  - Traffic passes across the link

Note: Some countries require Dynamic Frequency Selection (DFS), which delays the transmitter turn-on time during the initial Channel Availability Check period of 1 minute. In accordance with these regulations, the radios boot up, and then wait for 1 minute before linking.

  - Configure connected equipment and cabling
  - Test Ethernet (CAT5e or CAT6) cabling, and/or T1/E1 cabling, any auxiliary connector cabling and configure all interfaces
  - Configure IP settings for configuration and management
  - Configure passwords and security modes
  - Become familiar with the configuration and management interfaces through the Exalt GUI interface
  - Configure radio parameters
  - Set transmitter output power to engineered or allowed level (see RF Output Power Setting)
  - Set operating center frequency
  - Set link distance, occupied channel bandwidth, and frame length
- Make detailed radio performance measurements

  - Measure transmitter output power
  - Measure receiver threshold performance
  - Confirm unfaded error-free performance

Some of these tasks may not be possible or practical within a bench test environment due to the nature of the remote connectivity of peripheral equipment. However, it is good practice to perform as much as possible in this environment to minimize field/installation time and troubleshooting efforts.

Detailed performance measurements are usually not required for pre-installation, but can be easily performed at this stage and may be helpful for later troubleshooting efforts or for internal records. During troubleshooting, there may often be a point at which a back-to-back bench test should be performed to verify many or all of the above items, and in the case of a suspected faulty device, to help confirm the fault and determine which end of the system is at fault and in need of repair or replacement.

Note: See Back-to-back Bench Testing for detailed instructions.

RF Output Power Setting

The maximum RF output power is bounded by one of the following criteria:

- Maximum RF output power setting capability of the radio device
- Maximum RF output power allowed/authorized by the local government regulations and for this specific device
- Maximum effective isotropic radiated power (EIRP) of the transmission system allowed/ authorized by the local government regulations and for this specific device
- Desired RSL to not exceed the maximum RSL allowed by the device
- Desired RSL to minimize/eliminate interference into neighboring systems

Note: In many cases the radio must be pre-configured for legal maximum output power before connecting to the antenna and transmission system. Instructions for adjusting the output power can also be found at the rear of this guide in the EIRP section for your region.

Time Division Duplex (TDD) Factors

The EX-r Series GigE radios are very dynamic, allowing the installer to optimize and control the performance of the radio system for the intended application. The following parameters must be carefully determined during the link engineering phase:

- Link distance
- Bandwidth
- TDD frame size
- Mode (modulation)

The setting of the above parameters determines the following performance factors:

- Number of supported T1/E1 channels
- Ethernet throughput

- System latency (delay)

Use the *ExaltCalc* calculator to determine optimum settings for the above parameters to meet the needs of your application.

The following generalizations can be made with regards to these factors:

- The shorter the TDD frame size, the lower the latency
- The shorter the link distance, the lower the latency, the higher the throughput
- The longer the TDD frame size, the higher the throughput
- The higher the bandwidth, the higher the capacity
- The higher the mode, the higher the capacity

Note: Disable all T1/E1 ports if there are no T1/E1 interfaces connected. This shifts all available throughput to the Ethernet interface.

Note: If a selected combination of the Link Distance, Frame Size, Bandwidth, and Mode parameters cannot support all the desired T1 or E1 ports, the ports that cannot be supported are automatically disabled. Priority is placed on the T1/E1 port number. That is, the first port to be disabled, if necessary, is the highest port number, such as Port 4. See T1/E1 Configuration Pages for more information.

Link Orientation and Synchronization

Link *orientation* refers to the Radio A and Radio B placement in your network. Link *synchronization* refers to using external or internal timing to coordinate multiple links.

For every link, one end of the radio link must be configured as Radio A, while the other end is configured as Radio B. In single-link systems, it does not matter which end of the system is mounted at which end of the link, and there is typically no requirement for any link synchronization.

Link orientation and synchronization are more important for networks with site(s) where there is more than one link of the same type or for sites using the same type of radio that are very close to each another at one or both ends.

Configure collocated radio terminals for the same link orientation. That is, configure all radios at the same location as Radio A or Radio B.

Use link synchronization for collocated links. The radios allow the use of an internal synchronization source or an optional GPS synchronization kit. This synchronization controls the transmitter and receiver frame timing so that collocated radios are transmitting at the same time and receiving at the same time. This can substantially reduce the opportunity for self-interference. Without synchronization, collocated radios may be transmitting and receiving at the same time, incurring near-end interference.

Note: It is not always necessary to synchronize collocated radios. If antennas are substantially separated or blocked from one another and/or frequency separation tuning is used, the opportunity for near-end interference can be eliminated.

Note: When GPS synchronization is required or desired, one GPS kit is required for each EX-r Series GigE radio link in the connected or collocated network.

Radio A/ B Configuration

Use the Exalt GUI to configure the radio terminals for Radio A and Radio B orientation. Since many other parameters also need to be set, and the Exalt GUI is needed for these configurations, this is the best way to completely configure the radio terminals.

Radios arrive from manufacture in default configuration, orientated as Radio B and configured as shown in Table 1.

Table 1 Factory default settings

Parameter	Setting
Transmit Power	+4dBm
Link Distance	<10 miles
Bandwidth	8 MHz (10 MHz for some regulatory domains)
Mode	Mode 1
TDD Frame Size	2ms
Link Security Key	000000000000
Administration Password	password
User Password	password
IP Address	10.0.0.1
IP Mask	255.0.0.0
IP Gateway	0.0.0.0
Ethernet Interface	Alarm Enabled, Auto-negotiate
T1/E1 Enabling	All Disabled

Note: In many cases, the system design will not be identical to the factory default configuration, and in some cases, these differences prohibit the installation of the radio. If at all possible, obtain a computer and configure the radio terminals using the browser-based GUI. See Exalt Graphical User Interface (GUI) for details.

Radio Reset

Use the reset function if the IP address and/or passwords are lost. Use the following steps to perform a critical parameter reset:

1 Remove power from the radio by disconnecting the AC adapter from the power injector.

2 Hold down the RESET button on the power injector while applying power.

   Hold the RESET button down through the entire power cycle and monitor the DATA+POWER left LED on the power injector. Release the RESET button only after the LED is in the steady state (approximately 2 minutes).

3 Release the RESET button.

The following configurations are reset on the radio:

- IP address = 10.0.0.1
- IP mask = 255.0.0.0
- IP gateway = 0.0.0.0
- Administration password = password
- User password = password

Radio Synchronization

The radio synchronization feature improves the performance of Exalt radios operating in the same frequency band and that are collocated (such as in repeater and hub configurations). Radio synchronization ties radio systems together to operate off of a common clock system, ensuring that all radios simultaneously transmit and receive, and thus eliminating near-field interference issues and related radio system coupling.

Synchronization Modes

Synchronization can be accomplished using either an *internal* or *external* source. In either case, one radio in the network must be defined as the primary sync source (A) radio.

A Global Positioning System (GPS) kit from Exalt is required to implement external source synchronization. GPS synchronization is not available on all radio models. Contact your Exalt representative for details.

Synchronization implementation only requires one synchronization source for any interconnected network. The system also implements a redundancy configuration to maintain a majority of the synchronization functions in case of primary radio failure.

For internal synchronization, the primary radio is designated SYNC SOURCE. This radio provides the master timing for all interconnected radios. SYNC SOURCE radios and collocated radios must be configured as Radio A.

Collocated radios must be in SYNC RECIPIENT mode; they receive sync signaling from the SYNC SOURCE, either directly or daisy-chained with other collocated radios. Alternatively, the radio(s) can be placed in AUTO SYNC mode. AUTO SYNC synchronizes the radios to any source provided on the SYNC IN port. However, if an appropriate synchronization signal is unavailable, the radio becomes the SYNC SOURCE for all connected radios.

Internal Synchronization

Figure 4 illustrates the basic interconnectivity of a radio system using internal synchronization. In this scenario, there are two radios collocated at one site.

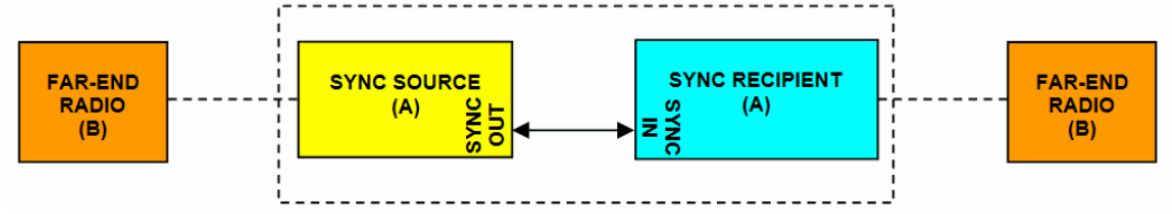

Figure 4 Basic radio interconnectivity using internal synchronization

In Figure 5, there are three collocated radios. In this configuration it may be desirable to make one radio a secondary sync source using AUTO SYNC. This provides redundancy if the primary sync source radio (A) loses power or experiences any other failure.

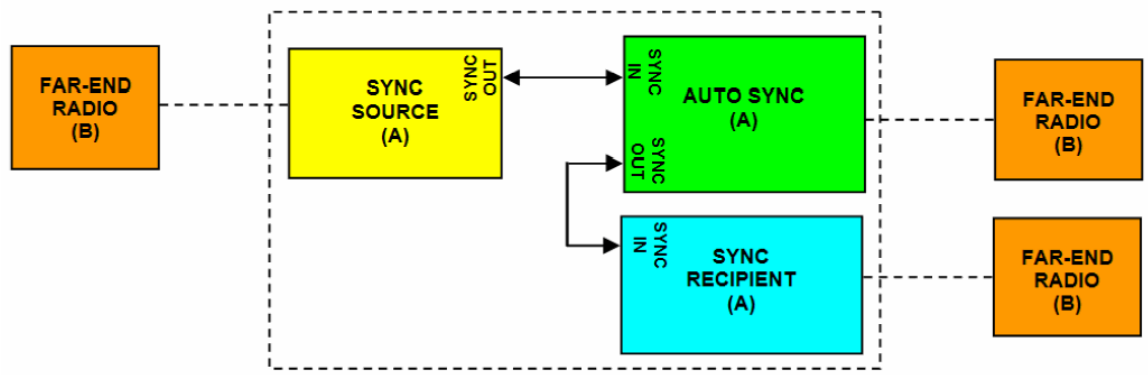

Figure 5 Collocated radios, one in AUTO SYNC mode to provide redundancy

The synchronization function can be carried across links to additional collocation sites. For example, Figure 6 illustrates a multi-link backbone with two hub sites.

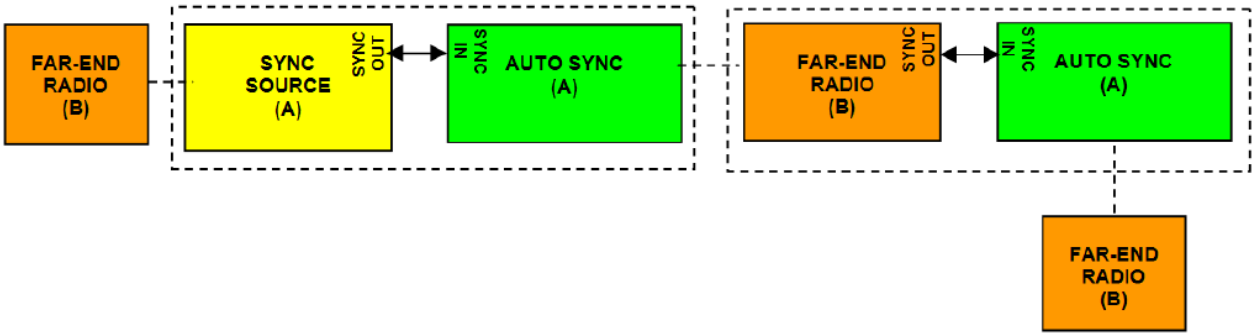

Figure 6 Multiple-link site configuration, using AUTO SYNC for redundancy

Note: Currently, the configuration shown in Figure 6 is not supported in all models. Consult your Exalt representative for details.

Virtually any combination of hubs and repeater sites, star configurations, and/or backbones can be implemented with synchronization using these configurations. It is typically necessary or ideal in each configuration to match the following parameters on every radio in the network:

- Link Distance – Match to the longest distance link in the network.
- Frame Length – Match to the lowest frame length to optimize total system latency (for example, for TDM networks) or match to a highest frame length to optimize user throughput. Choose an intermediate value to compromise between latency and throughput.
- Mode – It is desirable, but not always necessary, to match the mode for all collocated links.
- Bandwidth – It is desirable, but not always necessary, to match the bandwidth for all collocated links.

For complex networks, an Exalt engineer should review multi-link networks before deployment as several factors can optimize the network for desired performance.

External Synchronization

Use an external GPS source as an alternative to the internal synchronization source for system synchronization. This is ideal for links that are nearby each other, but are not directly collocated at the same site. Figure 7 illustrates using a GPS source for the primary synchronization at a typical site with collated radios.

Note: When GPS Sync is enabled, link initiation typically takes 1 to 3 minutes to allow for the radio to properly synchronize to the available GPS satellites.

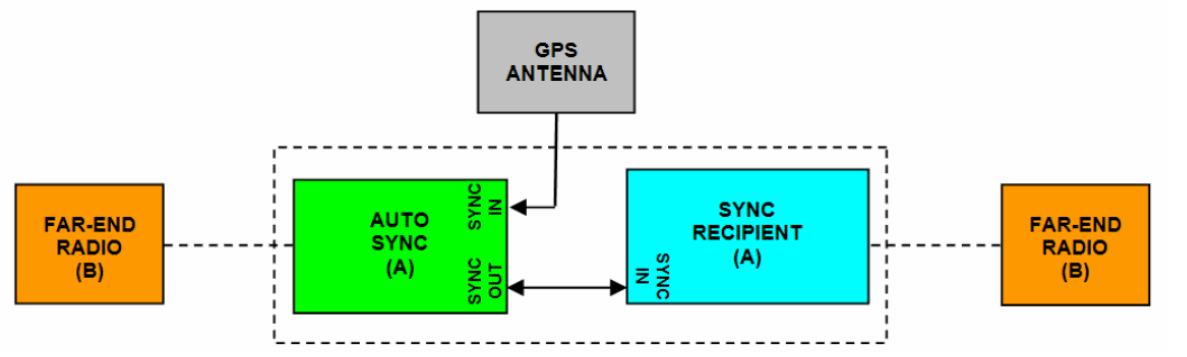

Figure 7 GPS as primary sync source using AUTO SYNC

Figure 8 illustrates two separate radio locations benefiting from synchronized GPS sources.

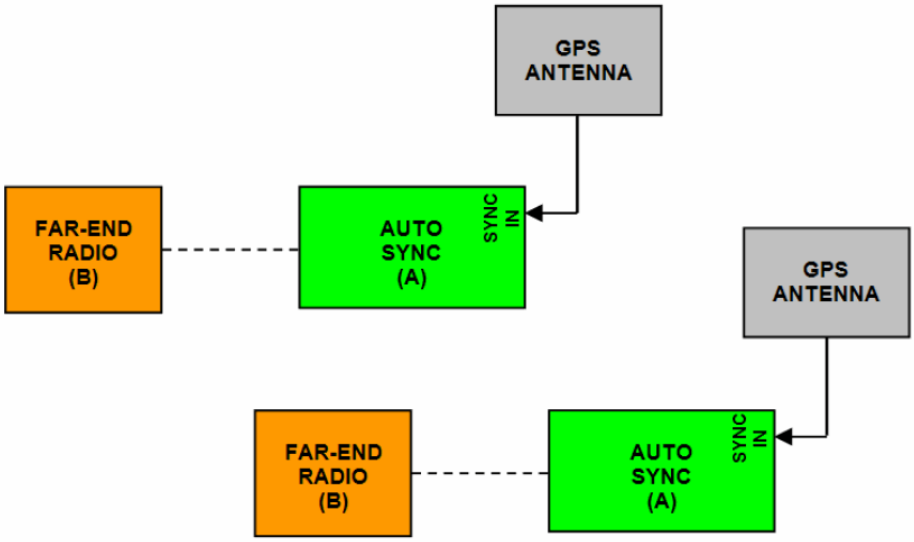

Figure 8 Synchronized GPS sources using AUTO SYNC

Offset Timing

Manual control of offset timing is also allowed. This provides a means to delay the synchronization signal using a user-defined offset. This is helpful when Exalt radios are near other devices operating in the same frequency band that also use a timing source, such as GPS. The timing source to the Exalt radios can be adjusted to match the other radio system timing source mechanism.

Offset timing can also optimize timing intervals for repeaters and backbones. As the distance of each link results in a unique factor for speed-of-light transmission of the radio signal, a subsequent radio can be delayed in timing so that the overall synchronization of radios is precisely maintained.

Offset timing can be adjusted in 1-ms intervals, from zero to the radio's frame length setting. For example, if using a 2-ms frame length, the offset timing can be set from zero up to 1999 ms.

When Sync is Lost

If the primary sync source (for example, the sync source radio or GPS source) signal is lost due to equipment failure, a disconnected sync cable, or other conditions, the first radio in the daisy-chain configuration set to AUTO SYNC resumes the sync function for the remaining connected radios.

If a radio is configured as SYNC RECIPIENT, transmission ceases if the sync signal does not appear at the SYNC IN connector.

A radio running in AUTO SYNC (without the sync source) is said to be *flywheeling*. That is, the clock is free-running off internal clocking and is no longer synchronized to any source.

If the original sync source is restored to the flywheeling radio configuration, the flywheeling radio attempts to synchronize to this signal without causing transmission interruption. All interconnected radios receiving sync from the flywheeling radio also continue to operate without interruption.

When the flywheeling radio runs independently for long periods of time, the synchronization signal can be too far outside of the capture range of the synchronization loop, and portions of transmission frames can be lost during the re-synchronization process. This condition is temporary and all interconnected radios re-synchronize to the sync source, as necessary.

For GPS synchronization, the wiring inside the Exalt radio carries the GPS signal to the next radio cabled in the system, even when power is removed from the SYNC SOURCE radio or during radio

failures. This provides redundancy for catastrophic failure of the SYNC SOURCE and maintains GPS synchronization. If the GPS source is lost (for example, due to failure of the GPS unit, a disconnected cable, or satellite blockage), the AUTO SYNC radio resumes synchronization duties for all collocated radios.

Virtual Local Area Network (VLAN)

VLAN segments information in a single connection and creates multiple separate connections to secure information of one type or for one set of users from other information types or for other sets of users. Exalt's VLAN communications implementation adheres to the IEEE standard 802.1q.

In most cases, an Exalt radio acting as a Layer 2 bridge between two locations is only required to pass traffic with VLAN tagging. Without additional configuration, all Exalt radios support frame sizes in excess of 1900 bytes, which currently supports all defined VLAN packet sizes.

Note: If an application only requires the transparent passing of VLAN traffic, disable the VLAN function.

Some situations require Exalt radios to act upon VLAN traffic and perform any or all of the following functions:

- Connect specific traffic, using VLAN tagging, to different purposes, such as management traffic to the radio's NMS system.
- Allow only traffic with specifically assigned VLANs to pass across the link, blocking all other VLANs or any non-VLAN traffic.
- Allow management access only through a VLAN connection, leaving the main traffic transparent.

Link Symmetry

The default configuration of EX-r Series GigE radios provides 50/50 symmetrical throughput. The Tx/Rx Throughput Ratio setting enables programming different symmetry for applications where significantly higher throughput in one direction is anticipated such as for video broadcast, video aggregation, or remote server/storage WANs.

Exalt does not recommend placing two links with asymmetry back-to-back in a serial configuration due to the TDD cycle of the radios. This configuration requires that one radio transmits in an overlapping time period while another radio is receiving. Physical antenna isolation and/or frequency channel spacing may accommodate this configuration. Asymmetry is, however, ideal for single-hop, multi-link hub/spoke architectures, or simply single independent links.

Note: Asymmetry is only supported for a specific subset of system configurations that are optimized for typical asymmetric applications.

Asymmetry is not currently supported in all EX-r Series GigE radio models. Consult your Exalt representative for details.

TDD frame sizes of 2ms and 5ms are supported. The 5ms configuration maximizes the aggregate throughput of the radio for every situation. The 2ms configuration reduces latency to meet latency-critical applications, especially for multi-link and TDM circuit support. The following RF BW/mode combinations are supported for these two configurations:

- 16MHz/Mode1
- 16MHz/Mode2

- 32MHz/Mode1
- 32MHz/Mode2
- 64MHz/Mode1
- 64MHz/Mode2

The following Tx/Rx ratios are supported for these two configurations:

- 65/35 and 35/65
- 80/20 and 20/80

For example, a radio configuration of 32MHz/Mode2 with a 5ms TDD frame size and dual-polarization supports up to 220Mbps user capacity or 110Mbps full-duplex. By selecting 80/20 on one side of the link and 20/80 on the other side, the radio allows up to 176Mbps in one direction, and 44Mbps in the opposite direction.

Note: Sync is supported with asymmetric settings, but in addition to the other requirements for sync, all radios tied to sync must be set with matching ratios.

T1/E1 is supported with asymmetric settings. However, based on the BW/mode setting (and in some cases, TDD frame size and distance), the direction with the limited throughput limits the number of T1 or E1 connections obtained. For example, the 16MHz/Mode1 single-polarization setting typically supports up to 27Mbps aggregate throughput. In the 80/20 ratio configuration, one direction is limited to 5.4Mbps, which is less than 3xE1 and less than 4xT1. Since TDM connections must be symmetrical, this setting therefore limits throughput to no more than 2xE1 or 3xT1.

Simple Network Management Protocol (SNMP)

The Exalt radios primarily use a browser-based graphical user interface (GUI) for radio configuration and management, as described in Exalt Graphical User Interface (GUI). In addition, a command line interface (CLI) is provided for serial and/or Telnet access, as described in Configuration and Management. SNMP is often used for management of larger networks as described here. Use SNMP to manage networked devices and execute the following functions:

- GET: Obtain information from the device, such as a configuration setting or parameter.
- SET: Change a configuration setting on the device.
- TRAP: The device proactively informs the management station of a change of state, usually used for critical alarms or warnings.

One feature of the SNMP implementation is that system configuration changes do not take effect using the SET command. Instead, groups of configuration settings can be preconfigured for global change, and a single ‘Save’ (Commit) command implements all changes.

When some parameters are changed, a link may drop and/or management control lost. MIB files allow many parameters to be set at once, allowing only a temporarily dropped link or management control issue. The opposite end radio can be quickly reconfigured, with little downtime for the link and management control. The save (Commit) command is similar to the Update button.

Dropped links or management control issues do not occur with every parameter change. Many configuration changes do not impact traffic or management access.

Exalt radios utilize SNMPv3, a high security version of SNMP, to ensure secure access to and storing of management data. The SNMPv3 security string matches the admin and user passwords. Passwords must be eight characters or longer. Some models also have legacy SNMP support for customers requiring SNMPv1 and/or SNMPv2.

System Installation and Initiation Process

The tasks required for radio installation and initiation are outlined in the following figure.

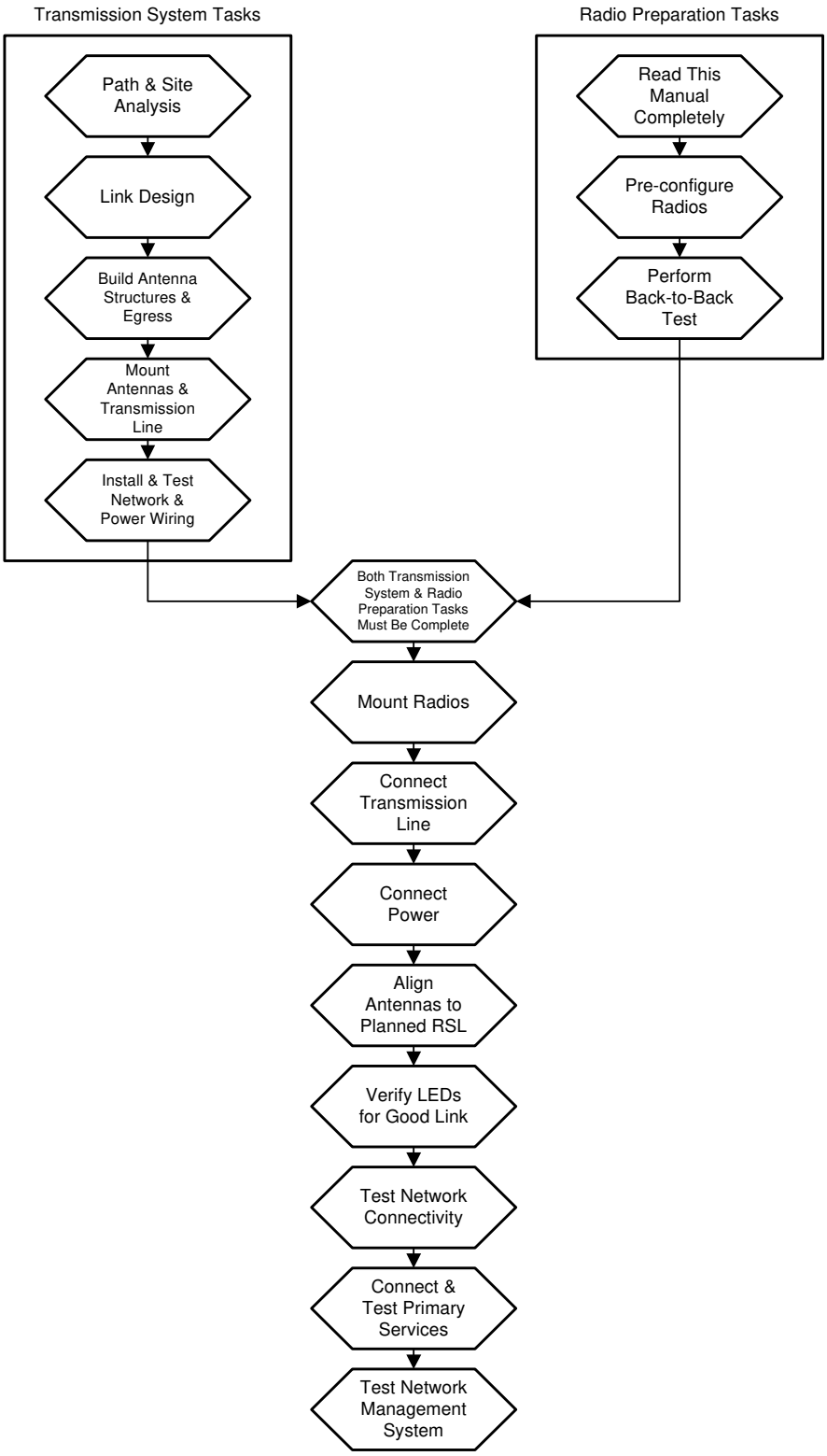

Figure 9 Radio installation tasks

Record Keeping

After installation, record the following items for ongoing maintenance and future troubleshooting. Keep a record for each end of the radio link and store a copy of these records at the radio location, at the opposite end radio location, and a central record storage location.

- GPS coordinates for antenna locations at each site
- Antenna heights above ground level (AGL), as mounted
- Antenna model numbers, serial numbers, and specifications
- Antenna polarization as mounted
- Length/type of primary transmission lines at each site
- Model number and serial number of RF lightning arrestors
- Length/type of secondary transmission line(s)
- Transmitter output power setting as installed at each site
- RSL as measured after antenna alignment at each site
- Designed RSL per original design at each site
- RSL reading with far-end power off (from each end)
- Spectrum analyzer plot with far end off at each site
- Voltage standing wave ratio (VSWR)/return loss at radio's antenna connector at each site
- Radio's network management IP address at each site
- Radio's network management gateway address at each site
- Radio's operating frequency, bandwidth setting, and mode of operation
- Optionally purchased extended warranty and/or emergency service contract details

In addition, certain information may be desired for central record-keeping only:

- Link security codes and log in passwords (stored in a secure place)
- Photographs of complete installation
- End-user sign-off/acceptance documentation (if any)
- Photo of product identification label (part number, serial number, MAC address information)
- Electronic copy of radio's configuration file
- Electronic copy of radio's installed software

Installation

This section presents all tasks required to install the Exalt Digital Microwave Radio.

Mechanical Configuration and Mounting

The EX-r Series GigE radios are environmentally sealed units intended for deployment outdoors. The device must be deployed within an ambient temperature range as specified, and with non-restrictive airflow around the chassis. The EX-5r-c GigE can also be mounted in an enclosure or indoors. The same airflow and temperature conditions apply. All EX-r Series GigE models can be mounted behind a window if window losses are considered in the link budget calculation.

Note: The power injector and power supply must be placed indoors or in an enclosure.

Provide proper clearance for all cables and connectors attached to the device.

Note that for the EX-5r-c GigE the RF cable connector may require significant clearance for the bend radius of the coaxial cable assembly. All RF connectors, cables, and adapters must be rated for operation within the radio's frequency range. RF connector losses must be accounted for within the link engineering design and output power settings.

Note: There are two RF connectors on the EX-5r-c GigE that facilitate connection to a cross-polarized antenna for polarization diversity. Seal the secondary connector when using a single-polarized antenna. Use the N-type cover cap and weather-seal tape included in the accessory kit to weatherproof this connector.

Mounting the System

Use the mounting system supplied with each terminal for wall or pole mounting (Figure 10). The pole mounting kit can accommodate a pole 2–5"/5–13cm in diameter. Install the mounting system first, and then affix the radio to the mount. The radio can also be affixed to the mount, and the entire assembly (including radio) mounted.

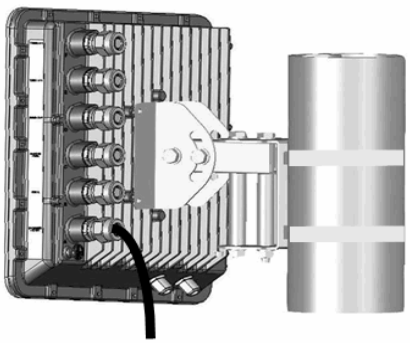

Figure 10 Pole-mount example

Figure 11 illustrates the pole/wall mount assembly, showing the azimuth and elevation adjustment points.

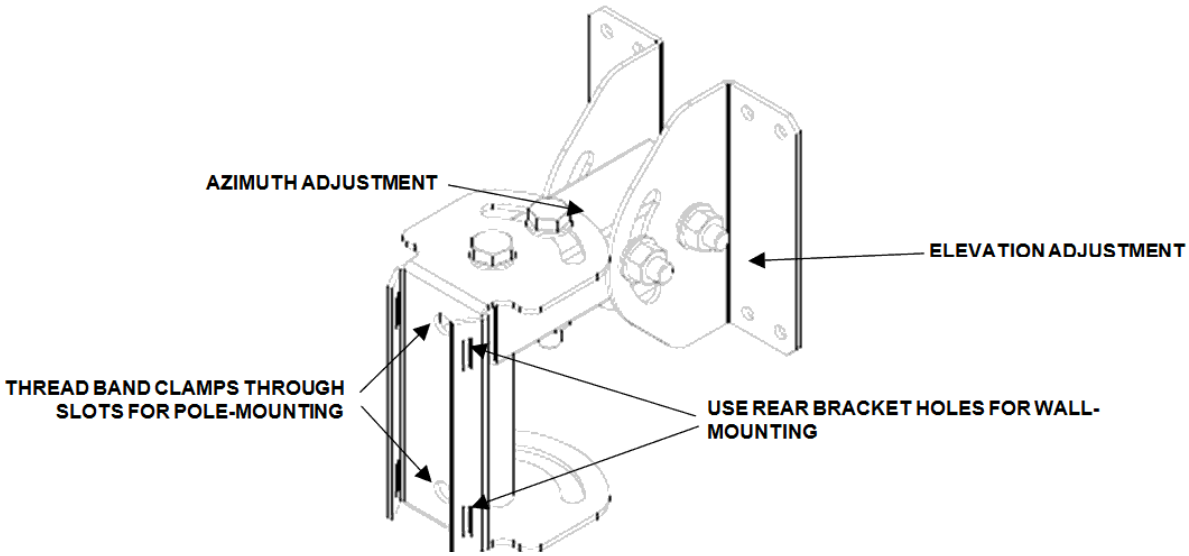

Figure 11 EX-r Series GigE pole and wall mount (with azimuth and elevation adjustment)

Figure 12 illustrates the EX-5r-c GigE pole/wall mount assembly.

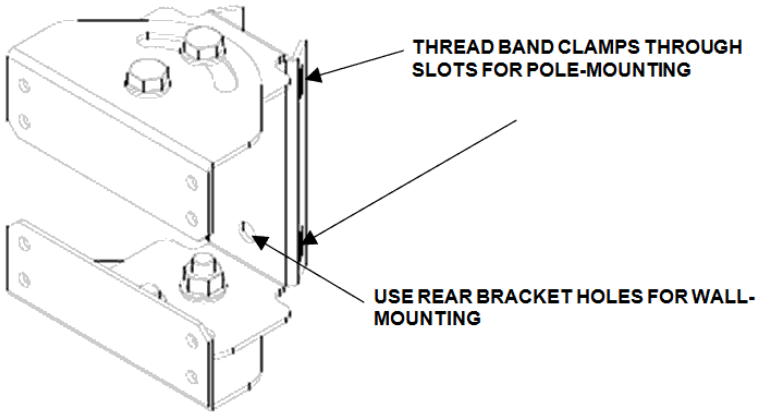

Figure 12 EX-5r-c GigE pole/wall mount

For the integrated antenna model, it is critical to mount the entire device at the predetermined location for proper path clearance to the link end. Ensure that there is adequate space around the mounting system and the radio to allow for antenna alignment for both azimuth and elevation adjustments.

Note: Mount the EX-5r-c GigE as close as possible to the antenna to minimize the length and associated losses of RF cabling.

Radio Ports and Indicators

This section provides a brief overview of the connectors, controls, and indicators on the device. Details about each item are in other sections of this document. Figure 13 shows the connectors on the EX-r Series GigE radios.

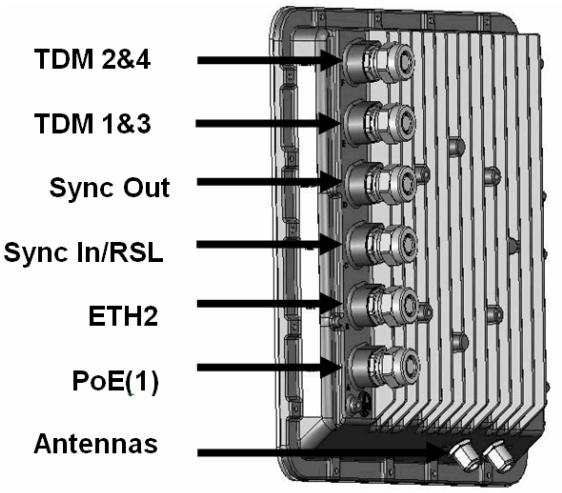

Figure 13 EX-r Series GigE *connectors*

Connector Overview

The primary user interfaces are shown in Figure 13. Table 2 provides details of the connectors. Detailed pin structures for each connector are in Interface Connections.

Table 2 Connectors

Connector	Description
TDM 2&4	Ports for up to two user T1 or E1 circuits to traverse link, port numbers 2 and 4.
TDM 1&3	Ports for up to two user T1 or E1 circuits to traverse link, port numbers 1 and 3.
Sync Out	Connect to Sync In of neighboring radios for network synchronization.
Sync In/RSL	(1) Connection to Sync Out of neighboring radio (optional) external GPS antenna for network synchronization. (2) Antenna alignment RSL voltage (during installation)
Ethernet 2	Secondary connector for 10BaseT, 100BaseT, or 1000BaseT for networking appliances or out-of-band management configurations.
Power/Ethernet	Connected cables traverse to the power injector (Data+Power side), and provide the following functions: • Primary ports for user Ethernet data (10BaseT, 100BaseT, or 1000BaseT) to traverse link • DC power from power injector
(Ground)	Threaded (M5) receptacle.

The connectors supplied with the radio have pre-inserted weatherproof inserts. Remove (and save) these inserts for any connectors that will be cabled. Keep the inserts in place for any unused connectors.

LED Indicators

Table 3 provides details of the LED indicators on the EX-r Series GigE radios. Note that there are two LEDs, labeled top and bottom, associated with each connector. See Alarms Page for information on how the Exalt GUI displays LED status.

Table 3 LED indicators

Location	Type	Function
TDM 2&4	Green LED	Solid when T1 clocking is present for input #2.
TDM 2&4 Bottom	Green LED	Solid when T1 clocking is present for input #4.
TDM 1&3	Green LED	Solid when T1 clocking is present for input #1.
TDM 1&3 Bottom	Green LED	Solid when T1 clocking is present for input #3.
Sync Out	Green LED	Solid when radio is configured as sync source.
Sync Out Bottom	Green LED	Solid when synch source is external (GPS).
Ethernet 2	Green LED	(Future implementation.)
Ethernet 2 Bottom	Green LED	(Future implementation.)
Sync In/RSL	Green LED	Solid when valid Sync In connection is detected.
Sync In/RSL Bottom	Green LED	Unused.
Power/Ethernet	Green LED	Solid when proper power is applied.
Power/Ethernet Bottom	Green LED	(Future implementation)
Power Injector		
DATA+POWER Left	Green LED	Solid when no alarm conditions are present. Flashing when in Reset mode.
DATA+POWER Right	Green LED	Solid when proper power is applied.

RESET Button

There is only one external control on the EX-r Series GigE radios system, a button labeled “RESET” located on the power injector. This button performs a critical system parameter reset.

Use the reset function if the IP address and/or passwords are lost. Use the following steps to perform a critical parameter reset:

1 Remove power from the radio by disconnecting the AC adapter from the power injector.

2 Hold down RESET button on the power injector while applying power.

Hold the RESET button down through the whole power cycle and monitor the DATA+POWER left LED on the power injector. Release the RESET button only after the LED is in the steady state (approximately 2 minutes).

3 Release the RESET button.

The following configurations are reset on the radio:

- IP address = 10.0.0.1

- IP mask = 255.0.0.0
- IP gateway = 0.0.0.0
- Administration password = password
- User password = password

Power

The radio requires a DC power source within specifications. DC can be provided from a DC battery source, central lab/rack supply, or from the supplied AC adapter.

Note: Read this section completely before applying power.

Terminating the RF Connectors (EX-4.5r-c GigE and EX-5r-c GigE)

Before applying power, the RF connectors must be properly terminated into a 50-Ohm load. If this is not performed, the radio may be damaged by simply applying power. Also, there are human safety factors to consider regarding potentially harmful RF radiation.

The following lists a few simple ways to achieve proper termination:

- Connect a 50-Ohm coaxial termination device to the RF port of the radio. The termination must be rated to 1W (or more). Example(s) include:
  - Broadwave Technologies P/N 552-200-002, or similar
- Connect the complete transmission system. That is, the RF cabling including the antenna. The cabled antenna provides a proper termination for the RF output.
- Connect a fixed (or a series of fixed) 50-Ohm attenuator(s) to the RF connector, either directly or at the end of an RF transmission line. The attenuator must be at least 30dB as specified at the operating frequency (~5700 MHz) and rated for a minimum of 1W input power. Examples include:
  - Broadwave Technologies P/N 352-103-xxx
  - Bird 2-A-MFN-xx
  - JFW Industries 50FP-xxx-H6-N

Cover any unused connector with the connector cap and apply the weather-seal tape. Both cap and tape are included in the accessory kit.

AC Power

The AC adapter easily connects to the power injector. Refer to the input voltage requirements stated on the label affixed to the adapter to ensure that the adapter can be used with the AC mains supply.

The AC plug outlet provided with the adapter may need to be replaced to match the country configuration. The adapter cable uses a standard connector for this cable for use of a pre-wired cable appropriate to the outlet configuration. If the appropriate cable is not available, the existing AC plug end can be severed and a replacement plug affixed. Consult a qualified electrician for this activity.

Do not plug the adapter into the mains power. First, verify that the RF connector is properly terminated (see Power), and then plug in the radio-side connector from the AC adapter to the radio. If the AC mains can be turned off using a switch, disable the power, plug the AC side of the adapter into the AC

mains socket, and then enable power to the circuit. If the AC mains cannot be turned off, plug in to the AC main socket to apply power.

Verify that the radio is active by observing LED activity on the injector and radio. All LEDs on the radio flash at initial power cycle.

Exalt strongly recommends that the AC mains supply be fused or on a separate breaker to ensure against over-voltage and/or over-current situations and to provide some form of protection to the radio electronics and other devices connected to the same supply. In addition, if the AC power is subject to significant spikes or variation, power conditioning is a worthwhile investment, as the quality of mains power may have a direct impact on the device operation, performance and/or reliability. An Uninterruptible Power Source (UPS) or other form of battery-backed system protects against brown-out and black-out conditions, and condition the power presented to the adapter.

Evaluate the opportunity for lightning or other similar surges to be present on the powering system, including the ability for surges to couple to the power wiring system. If an evaluation indicates that there is a potential likelihood for these conditions to occur, additional surge protection is recommended for the input power wiring, especially to protect the radio electronics between the adapter and the radio's DC input connector.

The above statement is similarly true for every wired connection to the device. While the configuration for surge suppression or line conditioning is of a different type for each kind of signal interface, the opportunity for damage to the device, loss of communications and property is significant. In some cases, there can also be a risk to human life by not protecting against lightning entering a building through wiring or improper grounding. If you do not have experience in this type of installation practice, consult a qualified electrician and/or telecoms professional during the installation and wiring of the equipment.

Power Injector

The EX-r Series GigE radios use a power injector to send DC power to the radio over the Ethernet cable, and including the Ethernet connections. Figure 14 shows the power injector connectors that connect the AC adapter (included with the system) and the radio.

Figure 14 Power injector connectors

- Connect the network Ethernet connection to the DATA connection of the power injector.
- Connect the cable for the radio to the DATA+POWER connection of the power injector.
- Ground the power injector using the grounding receptacle. The injector can also be mount wall using the bottom panel brackets.

Lightning/Surge Protection

To provide for human safety and for the safety of connected network equipment, it is highly recommended to place a weatherproof lightning suppression device at the egress point where the Ethernet cable(s) enter the building, shelter, or cabinet.

To protect the radio equipment, install a weatherproof lightning suppression device near the radio for all connected Ethernet cables.

For the Power/Ethernet cable, specific voltage requirements must be met. The following devices are the only devices currently recommended:

- Polyphaser IXG-05

Generally, use a short Ethernet cable supplied for the connection between the radio and the first arrestor. Use bulk outdoor-rated CAT5e or CAT6 cable for the longer run between arrestors, and indoor- or outdoor-rated cable with a standard Ethernet termination for the connection from the egress arrestor and power injector.

Apply this same cabling method for the TDM connections. There are no special requirements for lightning arrestors. Vendors, such as Transtector and Polyphaser, offer single and multiple TDM weatherproof arrestors. Note that each connector on the radio can carry up to 2 TDM (Time Division Multiplexing) connections.

Note: Use only outdoor-rated UV-resistant CAT5e or CAT6 cable. This cable must have an outer diameter between 0.25"/6.35 mm and 0.31"/7.87mm. Belden 1300A is recommended. Securely hand-tighten all connectors on the ODU to ensure a weatherproof seal.

Reset to Critical Factory Settings

If necessary, the radio terminal may be reset to critical factory settings. This may be necessary if the IP address and/or passwords for the system are not known. All other configurations are left at their current settings. If a complete default factory configuration is desired, load the Default Configuration File into the system, as described in System Configuration Page.

The following parameters are configured after a reset to critical factory settings:

- IP Address = 10.0.0.1
- IP Mask = 255.0.0.0
- IP Gateway = 0.0.0.0
- Administration password = password
- User password = password

Antenna/Transmission System

This section provides guidance to mounting and connecting the RF transmission system, which consists of the antenna, RF cabling, and RF lightning arrestors. Consult the manufacturer's instructions for proper mounting, grounding, and wiring of these devices, and for definitive direction. These manufacturer's instructions supersede any information in this section. See Table 7 for a list of supported antennas.

Initial Antenna Mounting (EX-4.5r-c GigE and EX-5r-c GigE)

The antenna must be an exact model recommended by the path and site planning engineer(s). Mount the antenna at the proper height, mast/mounting location and polarization orientation as determined by the path and site planning engineer(s). The model type, location, and orientation of the antenna is critical with respect to achieving proper path clearance, as well as to mitigate external or self-interference from nearby or collocated systems operating in or near the same frequency band.

Warning! Mount the antenna in a restricted area and in a manner preventing long-term human exposure to the transmitted RF energy. To comply with FCC and Industry Canada regulations, the minimum safe distance from the antenna for continuous human exposure is 10'/3m.

The antenna structure must be secure and safe with respect to the mounting of the antenna, transmission system weight, radio housing, and the combined weight of any personnel that may climb or attach to the structure.

The combined weight of items and forces on the structure must be carefully considered in the design and construction of the structure. This must include the weight bearing on the structure in the highest wind conditions possible in the region, and with respect to all objects affixed to the structure.

If additional objects are affixed to the structure in the future, it may be important to evaluate both the mechanical impact of these planned additions (with respect to wind and weight loading), as well as the potential impact to RF interference and frequency coordination (if additional radio equipment is anticipated). This is especially important if future equipment is likely to operate within the same frequency band.

Once the antenna is mounted, cabled, and aligned, your goal is to never require modification. This prior planning is important in the path and site planning stages and in construction of the antenna structure.

Follow the antenna manufacturer’s instructions for mechanical mounting of the antenna. Ensure that there is enough room around the antenna for alignment activities (moving the antenna in vertical and horizontal arcs), and for the RF transmission line to connect to the antenna connector unobstructed and within the specified bend radius requirements of the transmission line.

At this point, the antenna mounts should be fully secure to the structure, the feed of the antenna securely mounted to the antenna (if the feed is a separate assembly), and the azimuth and elevation adjustments not completely tightened in preparation of the antenna alignment activity. It is a good practice to connect the transmission line to the antenna connector as early in the process as possible, to reduce the opportunity for debris or moisture to enter either the antenna connector or the transmission line connector. Use a connector cover or other temporary measures to ensure that the connector is kept clear. Take extra care if the antenna is installed during inclement weather to ensure that no moisture gets inside the antenna connector at any time.

Now the antenna can be aimed in the general direction required for the link. Use a compass, a reference bearing, binoculars or any other similar device to point the antenna in the direction (generally) of the far end radio, and then slightly tighten the azimuth and elevation adjustments so that the antenna maintains its general position and is safe to be left without additional securing. Refer to the Exalt white paper, *Antenna Alignment*, for more information on antenna alignment techniques.

Transmission Line from Antenna to Radio (EX-4.5r-c GigE and EX-5r-c GigE)

Most installations use a very short length of coaxial transmission line for the connection between the antenna and the radio device. Coaxial transmission line can either have a solid or braided shield. Solid-shield cables are more resistant to external signal coupling and interference, but are generally stiffer than braided cables. Consult the path or site engineer(s) to ensure that the proper materials are chosen for the installation and that all factors were considered.

Generally, the larger the diameter of the transmission line, the lower the loss. So for longer runs of transmission line, larger diameter cables are highly advised. However, at every frequency, there is a maximum diameter cable that supports the operating frequency. Verify the specifications. This should is determined in the path and site planning process.

Table 4 lists representative samples of transmission line types recommended for the Exalt Digital Microwave Radio.

Table 4 Recommended transmission line

Manufacturer	Type	Description	Loss at 5.3GHz	Loss at 5.8GHz
Andrew	LDF4-50	1/2-inch solid shield	5.7dB/100'	6.0dB/100'
Andrew	LDF4.5-50	5/8-inch solid shield	4.4dB/100'	4.7dB/100'
Times	LMR-600	1/2-inch braided shield	6.9dB/100'	7.3dB/100'
Times	LMR-900	5/8-inch braided shield	4.6dB/100'	4.9dB/100'
RFS	LCF12-50J	1/2-inch solid shield	5.6dB/100'	5.9dB/100'
RFS	LCF12-58J	5/8-inch solid shield	4.5dB/100'	4.8dB/100'

It is critical that the transmission line and antenna be capable of supporting the same type of connector, or easily adapted. It can be important to minimize the number of connectors and adapters, and it is ideal that they match directly without adaptation. In most cases, transmission line allows for N-type male connectors and antennas have N-type female connectors.

If possible, connect the primary transmission line directly to the antenna. It is desired to have the fewest possible pieces of transmission line in the system, to minimize losses and points of failure from connectors. The antenna can typically accommodate a direct connection if planned in advance. Use a 90º adapter for the connection to the antenna, if necessary, but confirm that all connectors and transmission lines are properly specified for the operating frequency with minimum loss, proper impedance (50 Ohm) and proper VSWR characteristics.

Transmission line connector termination is a critical element of the installation. Many ‘factory built’ RF transmission lines do not provide the proper characteristics for proper transmission, despite their published specifications, often due to the fully or semi-automated process of factory termination, which may not have considered the frequency of your system. When buying pre-terminated transmission line, it is strongly advised to obtain the documentation of test measurements on the connected transmission line showing that the loss characteristics and VSWR are within the specified limits specifically at your operating frequency. In addition to factory-built transmission line, self-terminated transmission line can suffer the same issues.

Caution: Always follow the manufacturer's termination process EXACTLY, and only use the manufacturer's authorized tools and connectors for a given transmission line type.

The manufacturers of transmission line typically offer instruction and certification for transmission line termination, and may also provide videos illustrating the process. There is no amount of extra care, education, precision, and effort that can be overstated for this process.

There is often a need for a small excess of transmission line near the antenna to accommodate both the need for extra slack as the antenna is loosened and moved for the alignment process, and to accommodate a drip loop for the transmission line and the initial transmission line securing hardware and grounding near the antenna. In addition, the transmission line is typically very stiff, and can provide undue pulling force on the antenna or radio connector. Take care to align the cable with the connector so that it does not provide any torque or strain on the connector.

Consult your transmission line manufacturer for the proper transportation, hoisting, securing, and grounding process. Always be very mindful of the entire length of transmission line to ensure that the transmission line is never twisted, kinked, or over-bent beyond the specified bend radius. Once a transmission line is over-bent or kinked, it will likely never recover its specified characteristics, even after straightening, and will often be completely unusable.

The opposite end of this primary transmission line typically terminates at the radio connector. If using a long transmission line (in excess of 3'/1m), an RF lightning arrestor is recommended to protect the radio equipment.

As soon as practical, weatherproof the connected ends of the transmission line to the antenna and lightning arrestor and radio. This process should be delayed as long as possible to ensure that all systems are working properly before applying the weatherproofing. Once weatherproofing is applied, it may have to be removed for testing or installation modification. With this in mind, if the installation is occurring during inclement weather, take extra care at all times to ensure that no moisture enters any connector at any time. If moisture is suspected to have compromised the antenna or transmission line, it may render those devices useless without any means for remedy except for full replacement.

Cap and weatherproof the second antenna connector on the radio if using a single-polarity antenna.

Indoor Mounting

On rare occasions the antenna can be mounted indoors behind a window. In these cases, there would not be a need for drip loops or an RF lightning arrestor. Use a very short transmission line connected directly between the antenna and the radio mounted nearby. The weatherproofing process can also be omitted.

RF Lightning Arrestor

RF lightning arrestors provide a direct path to ground for lightning strikes that may couple to or directly hit the outdoor transmission system or antenna structure. The RF lightning arrestor prevents any associated voltage and current from entering the radio equipment, other equipment, or humans.

The following lightning arrestors are examples of proper devices for Exalt Digital Microwave Radios:

- Polyphaser AL-LSXM
- Andrew BB-BNFNFE-26

Mount and ground the RF lightning arrestor in accordance to the manufacturer's recommendations. Place it as close as possible to the radio equipment. Minimize the distance to the radio to lessen the

opportunity for lightning to couple to or strike the unprotected section of transmission line (if any). Consult a qualified electrician or installer in all cases of grounding and lightning arrestor implementation.

Antenna Alignment

Antennas must be installed at both ends of the planned link to commence precision alignment. Refer to the Exalt white paper, *Antenna Alignment*. The EX-r Series GigE radios have an integrated antenna.

Antennas are typically aligned using the radio hardware for precise alignment. However, there are many very useful tools available to aid in this process, inclusive of devices specifically designed for the purpose of aligning antennas. Some examples are:

- XL Microwave Path Align-R
- Teletronics 17-402

Use of these devices may be extremely advantageous as compared to using the radio, because they employ many unique facilities to aid in this process. Using these tools also makes it possible to align the antennas before the radio equipment is delivered. However, many installers successfully use the radios as the means for antenna alignment.

The following are the primary facilities when using the radio to align the antenna:

- RSL voltage connection using a volt meter (recommended)

  Insert the included adapter into the GPS connector on the radio housing and the opposite end connected to a volt meter.

  The RSL test point DC voltage is inversely proportional and numerically calibrated to the received signal level. The voltage rises as the antennas are less in alignment, and falls as antennas are more in alignment. The voltage measurement corresponds to the received signal level in measurements of dBm (a negative number for RSL measurements). For example, an RSL of -60dBm yields an RSL voltage measurement of 0.60VDC; an RSL of –45dBm measures 0.45VDC.

- Audio alignment buzzer

  Enable the audio alignment buzzer through the Exalt GUI. When enabled, the radio enclosure emits a sound. The pitch rises when higher (better) levels of RSL are achieved. Align the antennas until the highest pitch is accomplished. The tone is continuous when the two ends of the radio system are in communication. Otherwise, the buzzer beeps.

- Exalt GUI RSL reading indicates the current RSL in dBm.

Note: There is a slight delay in RSL readings in the GUI as the RSL levels change. In this case, fine alignment can be done in small adjustments allowing a small gap of time so that the impact of the adjustment on the GUI display catches up to real time.

Note: Only use the browser-based GUI for antenna alignment if there are no other means available. If this method is required, refer to Exalt Graphical User Interface (GUI). The RSL reading can be read on a PC or any handheld computing device that supports an HTML browser and Ethernet connectivity.

Configuration and Management

This section describes the command line interface (CLI) and Exalt graphical user interface (GUI).

Telnet into the Command Line Interface (CLI)

Use a Telnet connection to access the CLI in the Exalt Digital Microwave Radios. Use the CLI to set key parameters on the system.

Connect to the Radio in a Telnet Session

Make the Telnet connection to the radio through the Ethernet port. Use Windows and perform the following steps:

1 Open a command prompt or MS-DOS prompt (**Start>Run**).

2 Type C:\>Telnet <IP Address> at the command line:

The default IP address is **10.0.0.1**

Note: The accessing computer must be on the same IP subnet as the radio.

Telnet

Use Telnet when prompted to enter the administration level login and password. The default administration login is *admin* and password is *password*. It is recommended that the default administration password be reset by performing a radio reset (see Reset to Critical Factory Settings).

Figure 15 shows the menu choices available after log in.

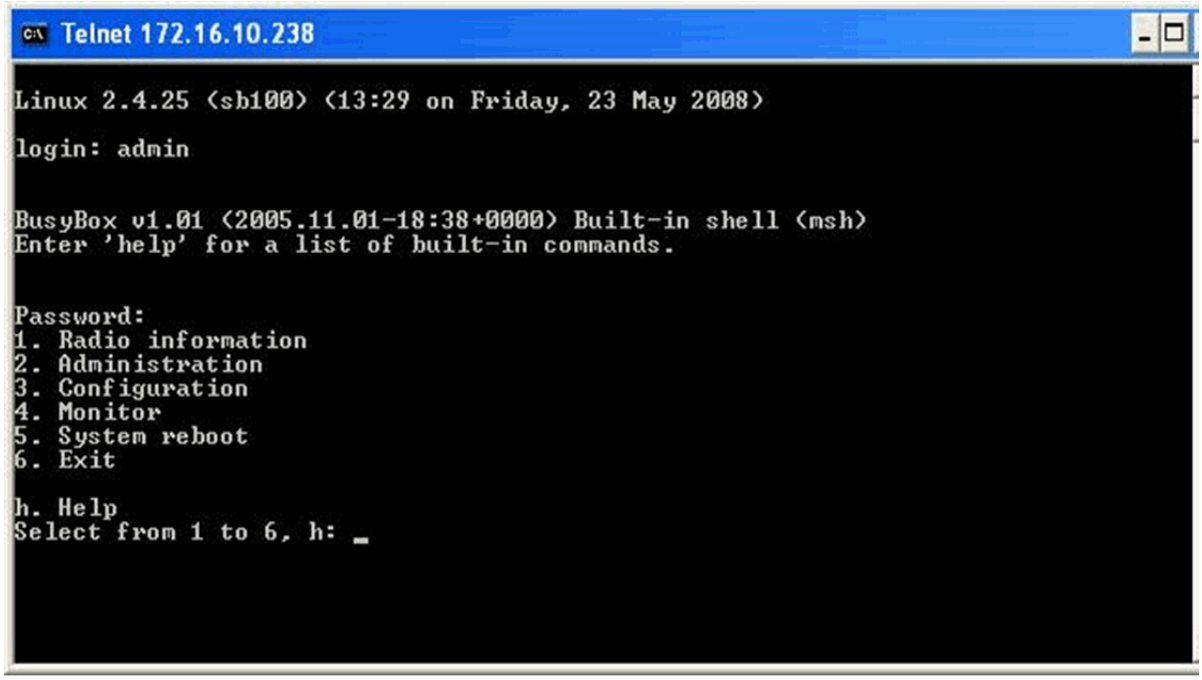

Figure 15 CLI main menu

The following selections can be made on all screens:

- 0 = back to previous screen
- 9 = help
- Ctrl+\ (control and backslash keys) = exit session

Exalt Graphical User Interface (GUI)

The Exalt GUI is the primary user interface for configuring and troubleshooting the radio and radio system. A computer or hand-held device with a conventional HTML browser and Ethernet port is required. Microsoft Internet Explorer is the preferred browser. Netscape, Mozilla, and Firefox are also supported.

Preparing to Connect

If the radios are new, both radios are preconfigured as Radio B, and have the same IP address. The initial priority is to configure one radio to Radio A and assign different IP addresses, unique to each radio. There are two ways to change the IP address:

1. Reset the radio to the critical default factory settings (see Radio Reset).
2. Connect to the GUI using the default IP address (10.0.0.1), and change the IP address through the GUI interface.

Note: To connect to the radio's Ethernet port and use the GUI interface, the accessing computer must match the radio's IP address subnet. It is therefore necessary to either change the radio's IP address through the CLI to match the subnet of the computer, or change the computer's IP address to match the subnet of the radio (such as, a computer IP address of 10.0.0.10 if trying to connect to a radio set to the factory default IP address of 10.0.0.1).

To configure a radio as Radio A, connect to the GUI and change the configuration, as discussed in this section.

Make Connections

It is recommended that one radio at a time be configured, on a bench, before taking the radios to the field for installation:

- (EX-4.5r-c GigE and EX-5r-c GigE models only) Terminate the RF connector with a 50-Ohm termination or a fixed attenuator of at least 20dB (see Power).

Note: Do not connect the radios in a back-to-back configuration. If the radios are set to their factory default settings, both radios are configured as Radio B and cannot communicate. Both radios also have the same IP address, which causes IP address conflicts

Note: The IP address subnet of the accessing computer must match the radio's IP address subnet to connect using Ethernet.

Once connected to the radio using Ethernet, log in to the Exalt GUI.

Log In

Use the following steps to log in to the Exalt GUI.

1 Open a browser window.

Microsoft Internet Explorer is the recommended browser. Netscape, Mozilla, Safari, and Firefox are also supported. If there are issues with your browser, please report it to Exalt Customer Care. You may be required to use a different browser to immediately overcome issues.

2 Type the IP address of the radio in the address bar.

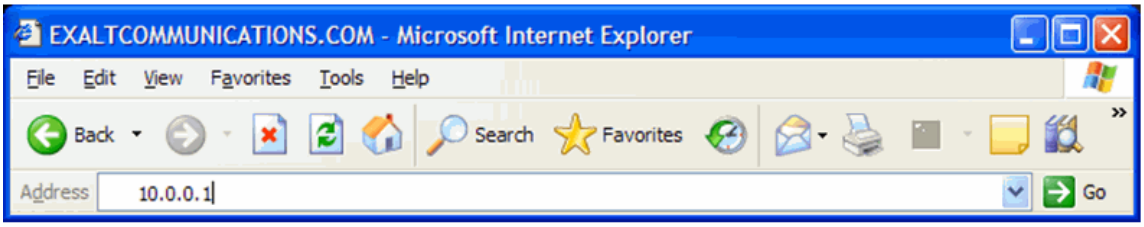

Figure 16 Initiating the browser connection

The following window displays after pressing the Enter key or clicking the Go button in the browser window.

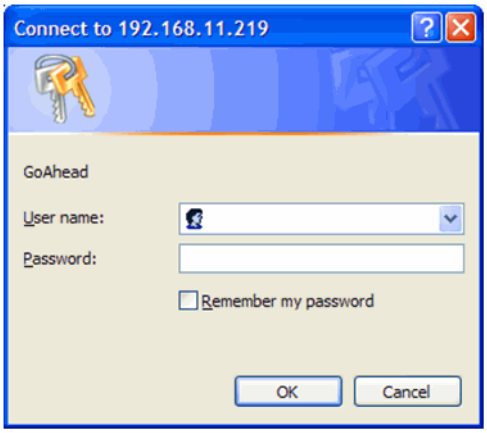

Figure 17 Browser Login screen

Login Privileges

There are two levels of login privileges:

- Administrator (admin) – assigned complete permissions to view, edit, and configure
- User (user) – assigned limited, view-only permissions with no edit or configuration rights

The default login names and passwords are as follows:

Table 5 Default login information

Privilege level	User name	Default password
Administrator	admin	password
User	user	password

Administrator login credentials are required for configuration purposes. Type the user name and passwords for Administrator level and click OK. The following screen displays.

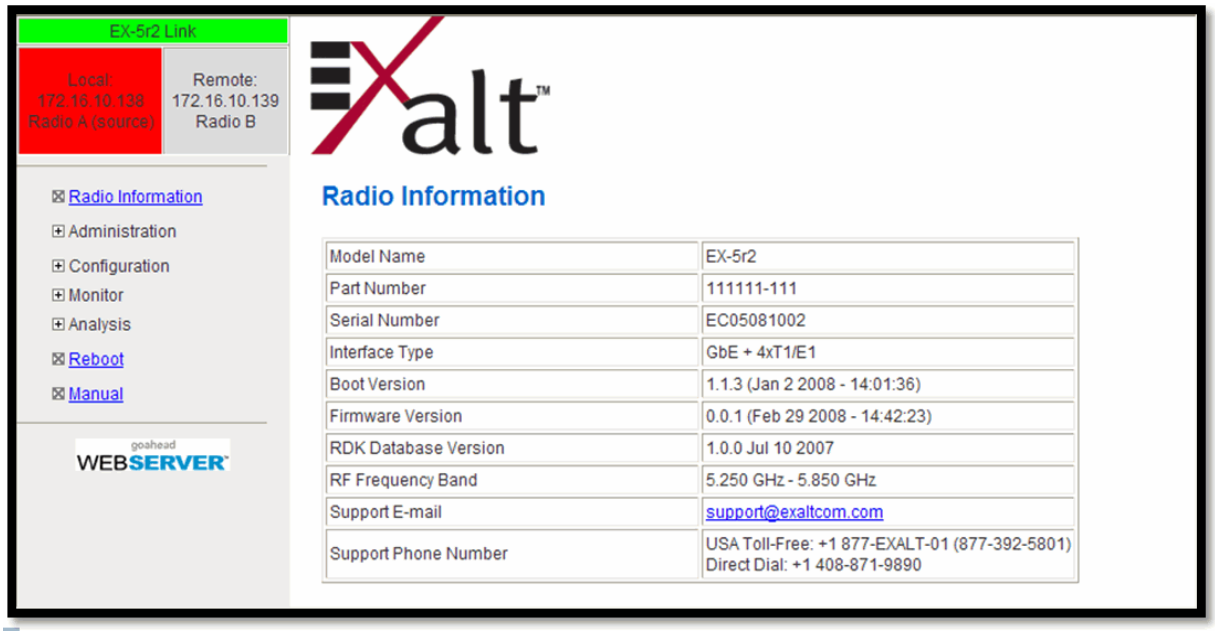

Figure 18 Radio Information page

Quick Start

To establish a link on the bench, apply the following basic configurations to the radio terminal. Use the steps in the *Quick Start Guide* included with the radio. A summary of the items that need to be configured are:

- Radio IP address for each end.
  - Each end must have a different IP address and cannot match the accessing computer's IP address or any address assigned if radios are part of a larger network.
  - It may be required to change the IP address of the accessing computer after changing the IP address of the radio so that the IP subnet matches.
  - The radio IP address is listed on the Administration Settings Page.
- Install the Regulatory Domain Key (RDK) for RDK-enabled radios only.
  - The radio is non-functional without the RDK.
  - RDK is entered on the Administration Settings page.
  - RDK references the unit's serial number and the country/region where the radio will be deployed.
  - RDK is obtained through your Exalt Authorized reseller or distributor.
- Set one radio as Radio A.
  - The radio selected as Radio A must be configured.
  - Radio A/B selection is the Endpoint Identifier parameter on the System Configuration Page.
  - Even though both radios are set as Radio B by default, confirm this configuration on the radio intended to be Radio B.

If all other parameters are still configured at their factory default settings, the radios can now be connected back-to-back to verify that the link is communicating and perform any other desired tests. See Back-to-back Bench Testing for test information.

Navigating the GUI describes each page of the GUI. Most configuration parameter settings are intuitive. The following link parameters must match at both ends for the link to communicate:

- Link Security Key (Administration Settings Page)
- Bandwidth (System Configuration Page)
- RF Frequency (System Configuration page)
- Link Distance (System Configuration page)
- TDD Frame Size (System Configuration page)
- Polarization (System Configuration page)

Note: Changing any of these parameters causes a temporary loss of link. The GUI displays a warning and provides an opportunity to cancel changes.

Navigating the GUI

The GUI provides the primary interface for all configuration and management. There are three sections of the main GUI window:

- Summary status information section (upper-left corner)
- Navigation panel
- Main window

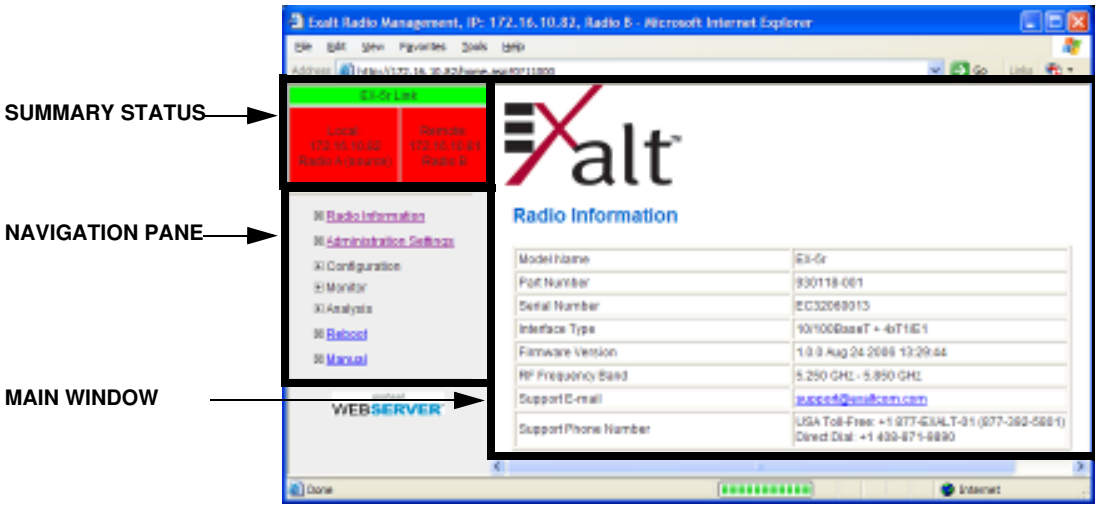

Figure 19 Exalt GUI window description

Summary Status Section

This section of the Exalt GUI provides a review of the system status.

In the screens in Figure 19, the top bar illustrates the alarm condition of the link. The information inside the bar is equivalent to the entry of the Link Name set by the administrator in the Administration Settings Page.

The color of the panel indicates alarm status:

- Green indicates the system is communicating and all functions are normal
- Yellow indicates a minor non-traffic affecting alarm condition
- Red indicates a major traffic affecting alarm condition

The left panel summarizes the alarm conditions of the local radio (the radio that matches the IP address). The information displayed is the IP address and the endpoint identifier (Radio A or Radio B). The right panel summarizes the alarm conditions of the remote radio (the radio linked to the local radio).

Note: The 'local' radio might be the near-end or the far-end radio, depending on the management interface connection. The terms local and remote refer to the orientation of the radio terminals relative to the IP address you are managing. When making certain changes to a near-end radio without first making changes to the far-end radio, the link may become disconnected unless configuration changes are reverted to their original settings. When making changes that may disrupt the link, **always change the far-end radio first, and then the near-end radio to match**.

The Summary Status Section allows the Exalt GUI to be a rudimentary management system. Minimize the browser window to display just the top bar or the top bar and radio information, and open several browsers on the desktop. When a window status changes to yellow or red, you can quickly maximize that window to determine the issues.

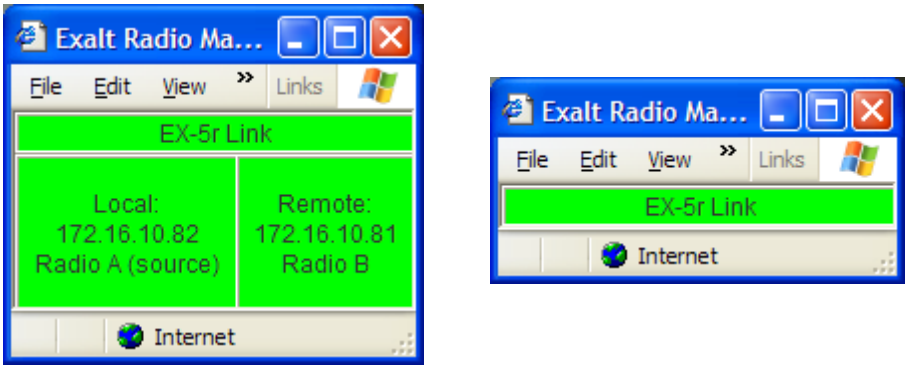

Figure 20 Summary status information

Navigation Panel

In the navigation panel, pages with sub-pages have a plus (+) to the left of the page link. Click the plus sign or page name title to view sub-page titles. The pages can be collapsed to hide the sub-pages when a minus (–) sign appears to the left of the page link.

Management pages are indicated with an X to the left of the page name. Click the X or page name to display the page within the main window.

Note: The 'local' radio might be the near-end or the far-end radio, depending on the management interface connection. The terms local and remote refer to the orientation of the radio terminals relative to the IP address you are managing. When making certain changes to a near-end radio without first making changes to the far-end radio, the link may become disconnected unless configuration changes are reverted to their original settings. When making changes that may disrupt the link, **always change the far-end radio first, and then the near-end radio to match**.

Radio Information Page

This page provides general information about the local radio terminal. This information is helpful for troubleshooting and for record keeping.

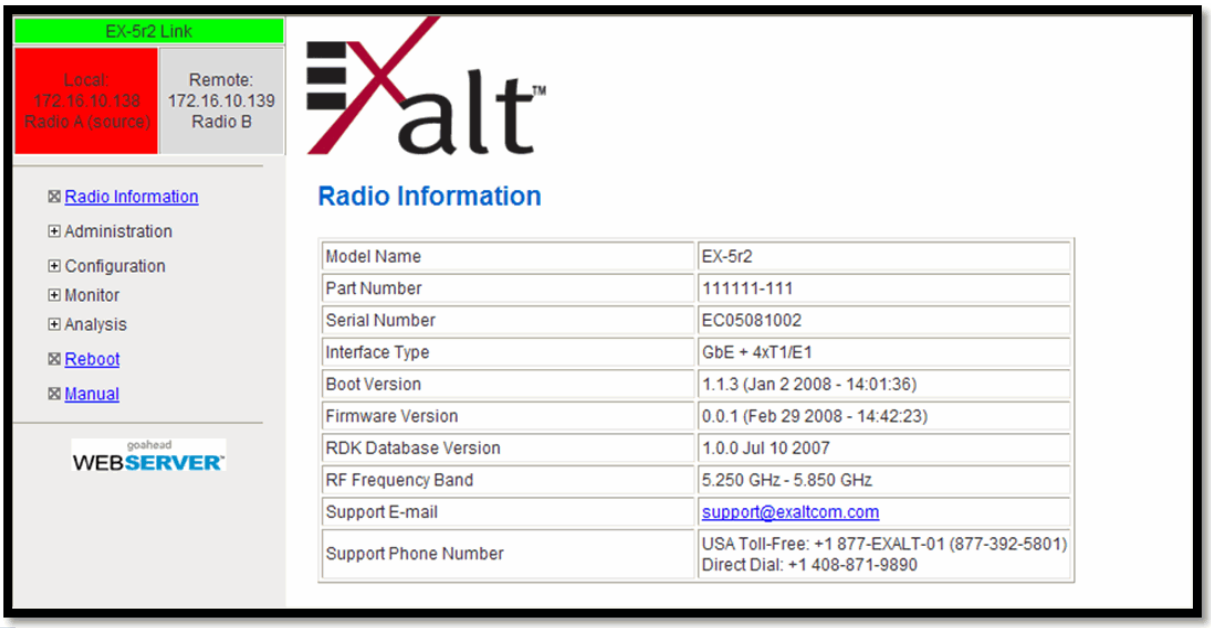

Figure 21 Radio Information page

Administration Settings Page

This page allows contains general parameters for the radio system. The Current Value column lists entries actual settings. Desired changes are entered in the New Value column.

After all desired changes are entered, click the **Update** button to accept and enable changes.

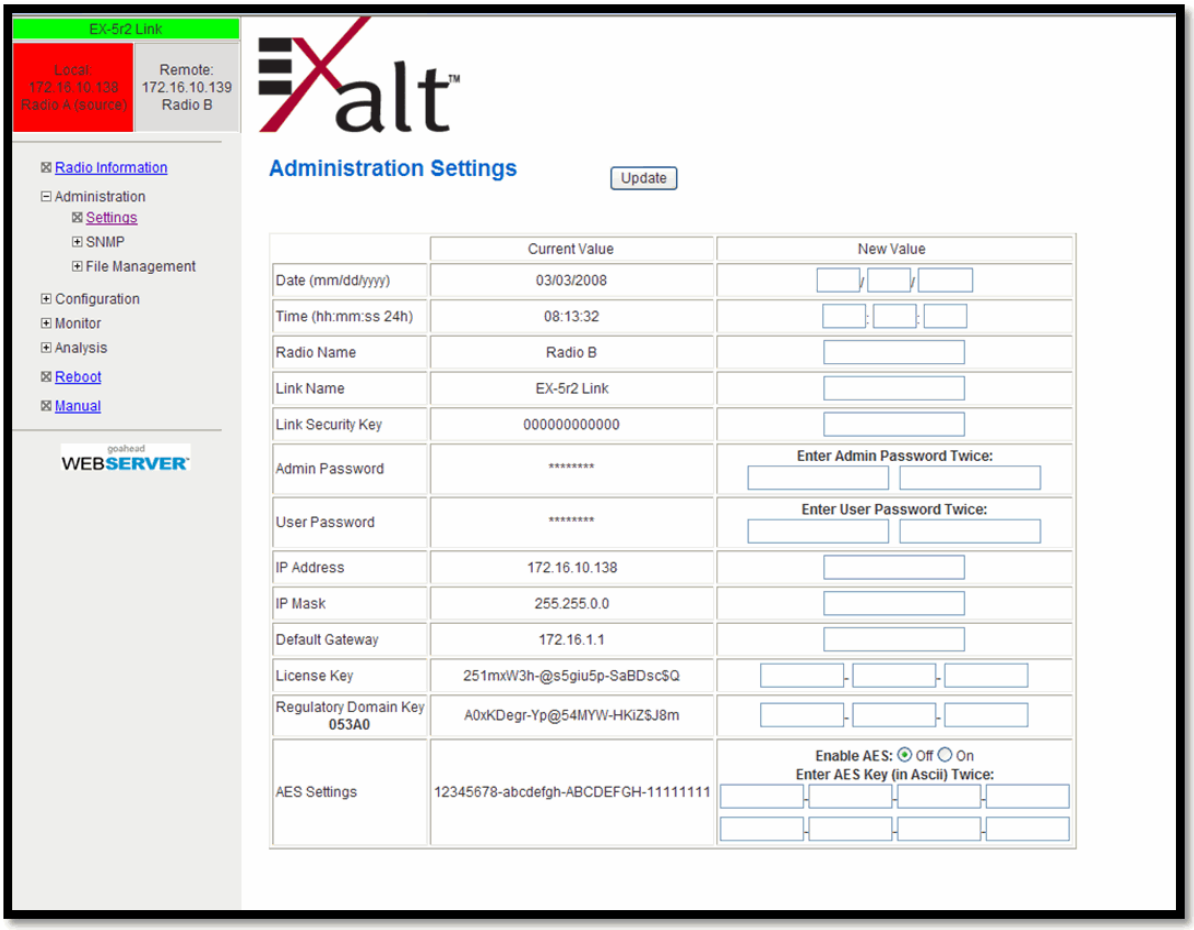

Figure 22 Administration Settings page

Most entries on this page are self-explanatory. The following lists unique or important parameters.

- Fill in the date and time fields as soon as practical. Events are captured with time/date stamps, which is valuable information for troubleshooting.
- Set the Link Security Key to something other than the factory default setting (12 characters, all zeros) at each end. The link security key must match at both sides of the link. If the security key remains at the factory setting, the radio link is open to sabotage by a party with the same radio model. Each link should have a unique security key. If using the same security key for every link in the network, the radio could link to any other radio with the same security key. This is problematic in multi-radio networks.
  - Note that the security key must be exactly 12 characters. Any printable ASCII character can be used. The link security key is case sensitive.

Note: Changing the link security key interrupts transmission until the opposite end is changed to match. **Always change the far-end radio first, and then change the near-end radio.**

  – Reset the admin and user passwords. These passwords should not match. If the admin password remains at the factory default setting, it provides an opportunity for random reassignment by a network-connected user.

  – The new password must be entered twice. If the passwords do not match and the Update button clicked, the password is not changed and remains set to the previous password.

- Enter the license key provided by Exalt to access extended features or diagnostic capabilities. Click **Update** to accept the changes and enable the new features. License keys are issued by radio serial number, so ensure that the license key used was issued for this particular radio.
- (5GHz models only) The Regulatory Domain Key establishes the frequency bands, tuning frequencies, bandwidths, output power and Dynamic Frequency Selection (DFS) requirements, in accordance with the regulations that apply in the country where the product is deployed. The RDK must be typed in to enable ANY functionality for the radio. The RDK is issued to the Exalt Authorized distributor or reseller, and is paired to the specific serial number of the radio.
- AES Advance Encryption Standard) can be implemented to provide additional data security for the wireless link. This function requires an upgrade license key (purchased separately). Both radios in the link must have a valid AES upgrade license key to implement AES. Different bit-length encryption license keys (for example, 128-bit and 256-bit) are also available, depending on model type. If the required upgrade license key is present, simply insert a matching ASCII string on both terminals and select the Enable AES On option for AES encryption. Note that similar to the administration and user passwords, the AES string must be entered twice for each terminal.

Simple Network Management Protocol (SNMP) Configuration

Use SNMP to manage networked devices and execute the following functions:

- GET: Obtain information from the device, such as a configuration setting or parameter.
- SET: Change a configuration setting on the device.
- TRAP: The device proactively informs the management station of a change of state, usually used for critical alarms or warnings.

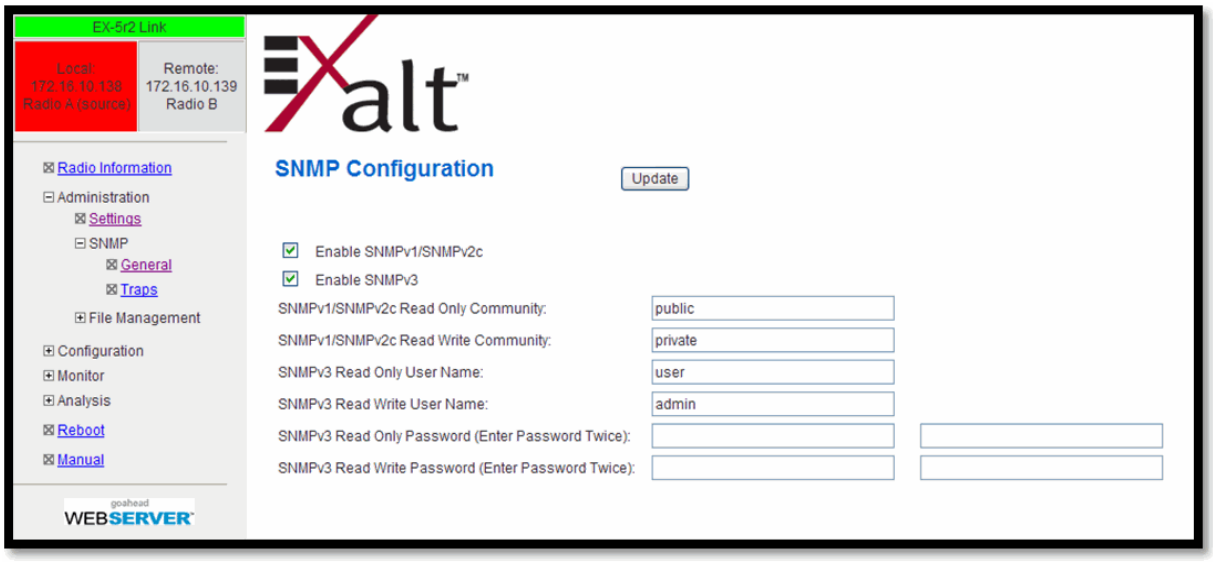

Figure 23 SNMP Configuration page

One feature of the SNMP implementation is that system configuration changes do not take effect using the SET command. Instead, groups of configuration settings can be preconfigured for global change, and a single ‘Save’ (Commit) command implements all changes.

When some parameters are changed, a link may drop and/or management control lost. MIB files allow many parameters to be set at once, allowing only a temporarily dropped link or management control issue. The opposite end radio can be quickly reconfigured, with little downtime for the link and management control. The save (Commit) command is similar to the Update button.

Dropped links or management control issues do not occur with every parameter change. Many configuration changes do not impact traffic or management access.

EX-series radios utilize SNMPv3, a high security version of SNMP, to ensure secure access to and storing of management data. The SNMPv3 security string matches the admin and user passwords. Passwords must be eight characters or longer.

Note: SNMP MIB files are listed on the File Activation Page.

The SNMP MIBs are organized similar to the GUI. Become familiar with the GUI before using the SNMP function.

SNMP v1/ v2c/ v3 Support Options

Enable the SNMPv1/v2c options to allow entering read and read/write community strings.

Note: Users are encouraged to avoid enabling SNMPv1/v2c support due to known security loopholes in these protocols.

Enable the SNMPv3 options to allow entering read and read/write user names and passwords. These entries are de-coupled from the standard radio user names and passwords. SNMPv3 provides full management security.

SNMP Traps

SNMP traps alert the central network management system with important issues about the radio system. Trap filters are set on the Traps Configuration page (Figure 24).

Trap support for all versions of SNMP are provided and can be independently enabled. Enter the IP address to which the traps are directed in the Trap Destination IP Address field. The AUX port (or the MAIN port when using in-band management) must be connected to the network to allow trap information to reach the designated IP address. In a bridged network, this may not require special network settings. In a routed network, the connected router must have a defined path for the IP address.

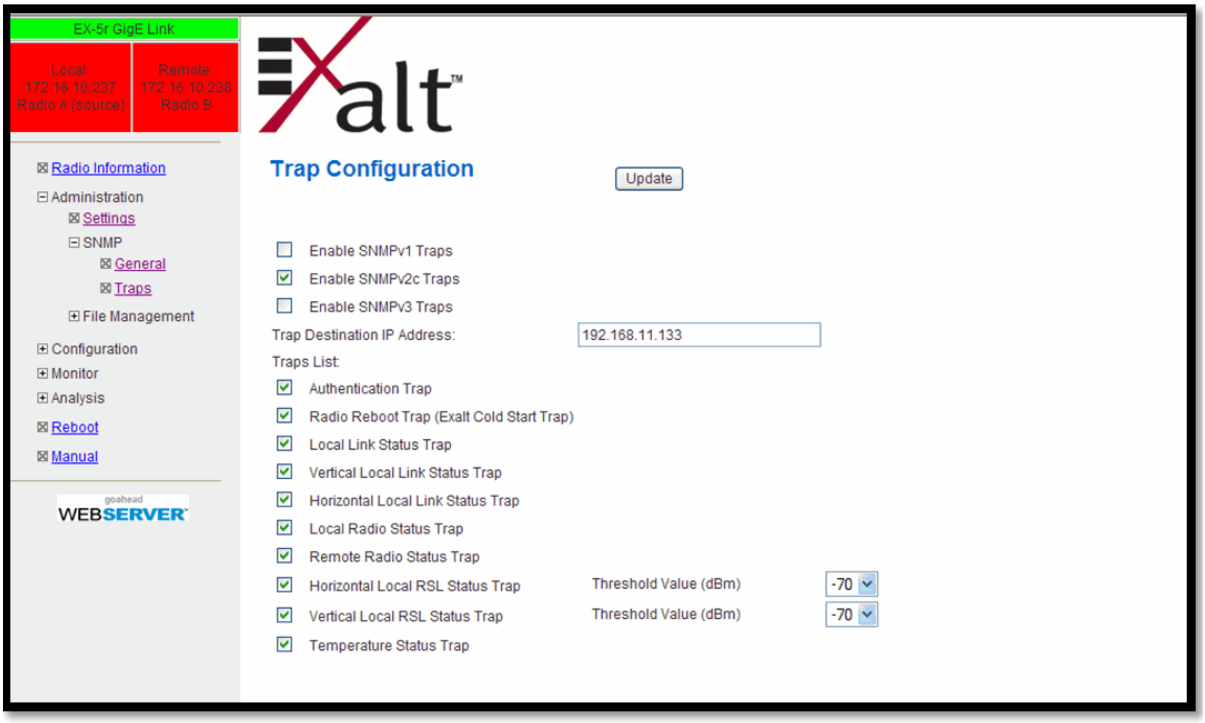

Figure 24 Trap Configuration page

Note: The **Update** button must be clicked to save any changes to this page.

The following traps are available:

- Authentication Trap: This is an SNMP standard trap when password information for SNMP is incorrect. This can help identify unwanted intrusions into the management system and for diagnosis of SNMP issues for valid users.

- Radio Reboot Trap: This trap is sent after any radio reboot to inform the manager of the reboot status.
- Local/Remote Link Status Trap: This trap is sent when Link is in errored state (equivalent to the Link LED on the radio front panel or the Link status bar in the upper-left of the Exalt GUI window).
- Local/Remote Status Trap: This trap is sent when Status is in errored state (equivalent to the Status LED on the front panel or the radio status box in the upper-left of the Exalt GUI window).
- Local RSL Status Trap: This trap is sent when the local RSL drops below the value set in the Threshold Value (dBm) field. Buffers are provided so that continuous traps are not sent if the RSL is bouncing near the set threshold value. This trap is reset only if the RSL rises to 3dBm above the set threshold value and then drops below that value. Exalt recommends that this trap be set to a value 5dBm or 10dBm above the threshold as a warning that the system has faded and may be approaching an outage.
- Temperature Status Trap: This trap is sent when the internal temperature reaches the warning point. This conveys that the external temperature control is in a fault state. Buffers are applied to this trap to avoid multiple traps when the temperature remains near the warning point.

File Transfer Page

This page allows the administrator to upload and download files to and from the radio. Three types of files can be uploaded: configuration, radio firmware, and Regulatory Domain Database (RDD). **When uploading Configuration Files, current configuration parameters are immediately overwritten, and the unit automatically reboots.** When uploading radio firmware files, the file is placed into reserve memory space. After the new radio firmware file uploads, use the File Activation page to enable the files (see File Activation Page).

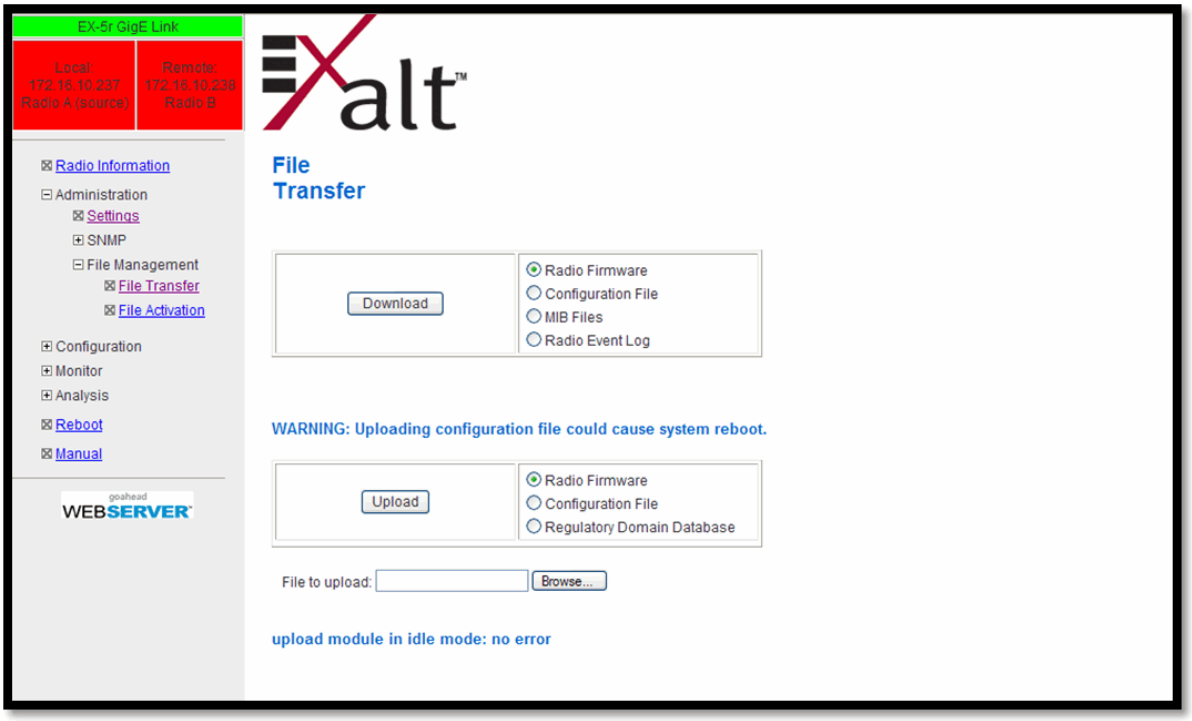

Figure 25 File Transfer page

Note: Issues with the RDK may be caused when the Regulatory Domain Database (RDD) is not up to date. Go to the Exalt Web site to download the current RDD.

Up to four types of files can be downloaded: configuration, radio firmware, radio event log, and MIB. The MIB file refers to the Management Information Base related to the Simple Network Management Protocol (SNMP) function, and is only available on models which support SNMP. See Simple Network Management Protocol (SNMP) for more information.

Note: Check the existing loaded files before uploading new radio firmware files. New file uploads overwrite the secondary file location. If important files reside in the primary or secondary file location, download them before uploading the new files. Only the active radio firmware file can be downloaded. Therefore, to download the reserve file, it must first be activated (using the Swap button). See File Activation Page. The current radio firmware and RDD versions can be viewed on the Radio Information Page.

Use the following steps to download a file.

1 Select the type of file to download (configuration or radio firmware).

2 Click the Download button and wait for the radio to prepare the file for download.

A second page/link appears (Figure 26).

3 Right-click the link on the page to download the file to a desired location.

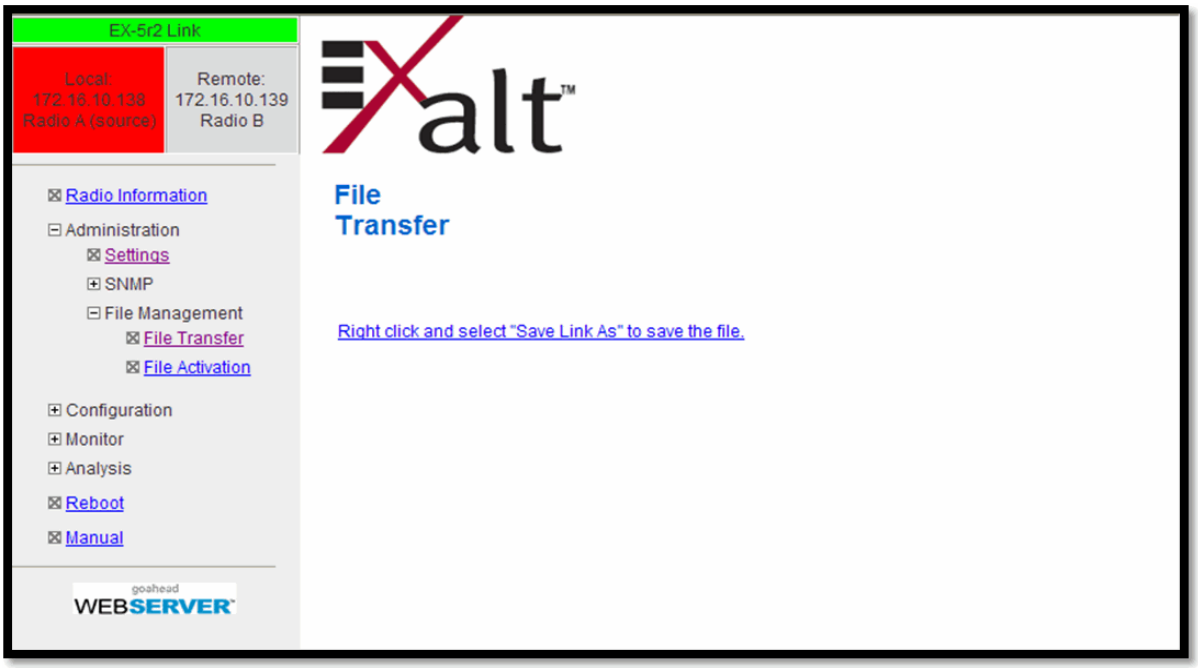

Figure 26 File Transfer page—download file link

File download and upload is useful when configuring several radios with similar settings. A copy of the configuration file can also help restore radio settings. In addition, a copy of the Exalt default configuration file is helpful to restore the radio to factory settings.

Note: Do not change the name of any download file. The configuration file must be named config.xml. To keep track of multiple configuration files, use a folder naming system or temporarily rename the file, however, it must be named config.xml before it can be uploaded to a radio. Never change radio firmware file names under any circumstances.

If copying the same configuration file into multiple radios, some parameters will match and that may be undesirable. However, it may be easier to change just a subset of parameters rather than every parameter. The following parameters can cause problems or confusion if they match at each of a link:

- Radio Name
- Endpoint Identifier
- IP Address
- IP Subnet Mask
- Default Gateway

The following parameters can match at both ends of the link:

- Link Name
- Link Security Key (although each link should be different)
- Admin and User passwords

- Bandwidth
- RF Frequency
- Link Distance
- TDD Frame Size
- T1/E1 configurations
- Ethernet configurations
- Polarization setting

Three different types of files can be uploaded into the radio. After selecting the file type, browse to the location of the file on your computer, and then click Upload.

The radio firmware file extension is .bin, and is the core code for the radio. Always verify that the code type matches the radio being accessed. The filename should match the name of the code that is currently installed, but with a different number sequence at the end of the filename.

The configuration file makes all configuration settings on the radio. Only upload configuration files from the same model-type radio, or edited XML versions of the same model.

(5 GHz models only) The regulatory domain database file governs the RDK function. Upload updates, as required.

File Activation Page

Use this page to move stored or uploaded files for use on the radio. The page indicates which file is currently in use, and which file is available for use. Click the Swap button to place the file in the Alternative File column into the active state and move the file in the Current File column to the Alternative File column.

Figure 27 File Activation page

Note: In all cases, the radio reboots after a new file is selected using the Swap function. This places the radio out of service for a short time.

System Configuration Page

This page contains several critical system parameters.

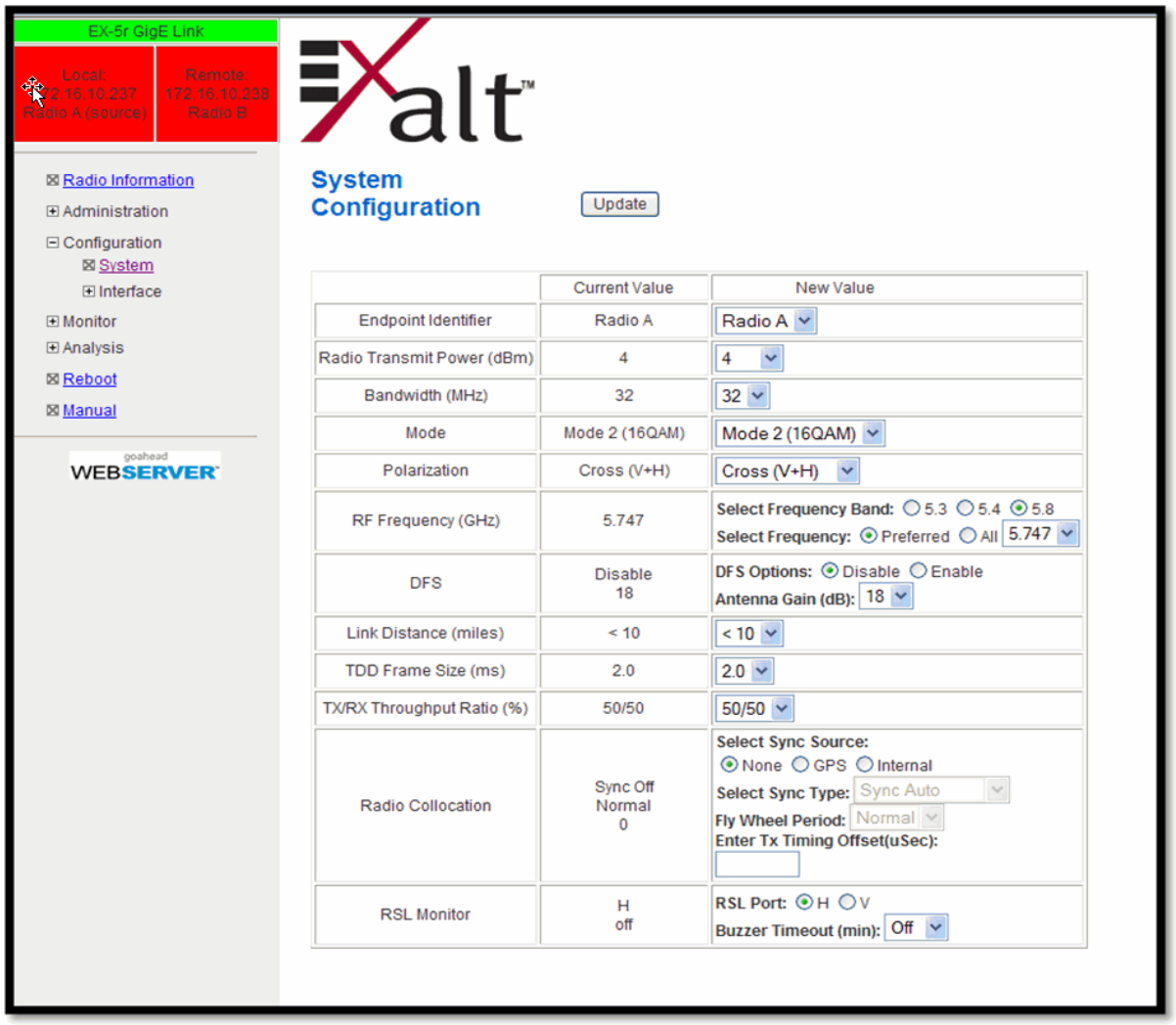

Figure 28 System Configuration page

Note: For models requiring a Regulatory Domain Key (RDK), you must enter a valid RDK to edit this page.

Most entries on this page are self-explanatory. The following lists unique or important parameters.

- Set the Endpoint Identifier so that one end of the link is set to Radio A and the opposite end set to Radio B. In single-link networks, it is unimportant which end is designated A or B. In multi-link networks, however, it may be important to orient the links so that at any collocation site (where there are multiple radios of the same type at the same site), all radios are set to the same Endpoint Identifier (A or B). See Link Orientation and Synchronization.

Note: Changing the Endpoint Identifier parameter requires a reboot of the radio to take effect. The reboot temporarily interrupts traffic.

- Set the Radio Transmit Power (dBm) parameter to the designed level. The professional installer sets this value or dictates the value of this setting to the system administrator following the system

design and local regulations. In many cases, this value must be set to a proper value to comply with legal restrictions. Improper values can result in liability to the user and/or installer.

Note: Changing Radio Transmit Power *may* temporarily interrupt traffic. Small changes in output power do not normally interrupt traffic, but larger changes may.

– Do not adjust the Radio Transmit Power parameter to a value higher than is legally allowed.

– Do not adjust the Radio Transmit Power parameter lower than the link budget and fade margin can afford.

Note: The link may be lost and unrecoverable through GUI control. If the link is lost due to reduction of Radio Transmit Power, travel to the radio location(s) may be required to reset the value.

- Set the Bandwidth (MHz) parameter to the designed level. The value of this is determined in the design/engineering stage. The Bandwidth parameter must also match at both ends of the link. In conjunction with the Mode parameter, the Bandwidth parameter directly relates to the capacity, latency, and the number of TDM circuits supported. The transmitter and receiver bandwidth are modified using this parameter, making it critical that it be set with respect to the local RF noise and interference profile, and/or in relation to any multi-link network design.

Note: Changing Bandwidth will temporarily interrupt traffic. The Bandwidth parameter must match at each end. Adjust the far-end radio first, and then the near-end radio. Changing Bandwidth changes the radio's threshold. A narrower bandwidth has better threshold performance and improved interference immunity, therefore if changing to a wider bandwidth, there is an opportunity that the link may be lost and unrecoverable through GUI control. Check the available fade margin and interference profile to determine if the impact to threshold and increased bandwidth is acceptable to maintain the link and the desired performance. If the link is lost due to increasing the Bandwidth parameter, travel to the radio location(s) may be required to reset the value.

- Set the Mode parameter to the designed selection. The value of this setting is determined in the design/engineering stage. The Mode parameter must match at both ends of the link. In conjunction with the Bandwidth parameter, the Mode parameter setting directly relates to the capacity of the system, as well as critical RF parameters, including receiver threshold, carrier-to-interference ratio, and in some cases, maximum radio transmit power.

Note: Changing Mode *will* temporarily interrupt traffic. **The Mode setting must match at each end**. Adjust the far-end radio first, and then the near-end radio. Changing Mode changes the radio's threshold, carrier-to-interference ratio, and also may have impact on the Radio Transmit Power. A lower mode has better threshold performance and carrier-to-interference ratio, and in some cases, higher output power, therefore if changing to a higher mode (for example, from Mode 1 to Mode 2), there is an opportunity that **the link may be lost and unrecoverable** through GUI control. Check the available fade margin and interference profile, and determine if the impact to RF performance is sufficient to maintain the link and desired performance. If the link is lost due to increasing the Mode parameter, travel to the radio location(s) may be required to reset the value.

- Set the RF Frequency (GHz) parameter to the designed point. The value of this setting is determined in the design/engineering stage. RF Frequency must match at both ends of the link. It may be critical to set RF Frequency with respect to the local RF noise and interference profiles, and/or in relation to any multi-link network design.

The frequency selection section includes the ability to select from either the complete list of frequencies ("All") that can be tuned for the selected band and bandwidth, or, in some cases, a pre-selected list of non-overlapping center frequencies ("Preferred") that Exalt determined provides the most flexible collocation opportunities for large networks of Exalt radios

The frequency selection section includes a band selection button that must be enabled for the frequency band of operation for which the link was engineered. In some cases, some bands may not be selectable due to regulatory constraints. Some bands also require Dynamic Frequency Selection (DFS), based on the active RDK. DFS is automatically enabled for these bands and is selectable for all other bands.

Note: Changing RF Frequency will temporarily interrupt traffic. The RF Frequency parameter setting must match at each end. Adjust the far-end radio first, and then the near-end radio. If the RF Frequency parameter is changed to a frequency with interference, the link may be lost and unrecoverable through GUI control. If the link is lost due to changing the RF Frequency parameter, travel to the radio location(s) may be required to reset the value.

- (5GHz models only) DFS is automatically enabled for any band where required based on the regulations that match the active RDK. For bands where DFS is not required, it can still be selected. For DFS to operate properly, set the antenna gain figure to match the installed transmission system gain (that is, the gain of the antenna minus all losses between the radio and the antenna).

Note: When DFS is enabled, the radio temporarily stops transmitting for at least 60 seconds to ensure that no radar interference is present. This is called "Channel Availability Check (CAC)." The DFS status displays on the Alarms Page. Once CAC passes, the radio resumes normal operation. If at any time during CAC or regular operation a qualifying radar signature is detected, the radio shuts down communications for a minimum of 30 minutes. This is the Non-Occupancy Period (NOP). Transmission only resumes after the NOP completes and then only after a successful CAC.

- Set the Link Distance (miles) parameter to the range that is equal to or greater than the actual link distance. The value of this setting is determined in the design/engineering stage.

Note: Changing the Link Distance parameter will temporarily interrupt traffic. The Link Distance setting must match at each end and must not be less than the actual link distance. Adjust the far-end radio first, and then the near-end radio. If the Link Distance parameter is changed to a setting less than the actual distance, the link may be lost and unrecoverable through GUI control. If the link is lost due to this situation, travel to the radio location(s) may be required to reset the value. If the Link Distance parameter setting is set to a distance unnecessarily higher than the actual link distance, the radio may have substantially reduced performance with respect to throughput and latency.

- Set the TDD Frame Size (ms) parameter to the designed level. The value of this setting is determined in the design/engineering stage. The TDD Frame Size parameter must match at both ends of the link. The TDD Frame Size parameter setting directly relates to the capacity, latency, and number of TDM circuits that can be supported over the given link distance. In multi-link networks, especially where there are collocated links, it is also important to set all radios to the same TDD Frame Size setting to avoid self-interference. See Time Division Duplex (TDD) Factors and Link Orientation and Synchronization for more information.

Note: Changing the TDD Frame Size parameter *will* temporarily interrupt traffic. **TDD Frame Size parameters must match at each end**. Adjust the far-end radio first, and then the near-end radio. If the TDD Frame Size parameter is set to a value that cannot be supported for the link distance, **the link may be lost and unrecoverable** through GUI control. If the link is lost due to this situation, travel to the radio location(s) may be required to reset the value.

- Set the TX/RX Throughput Ratio (%) parameter to program radio symmetry. The default setting is 50/50 for symmetrical, full-duplex throughput. Other throughput ratio options are 20/80, 80/20, and 65/35, 35/65. See Link Symmetry.

  For asymmetric throughput, only TDD frame size settings of 2ms and 5ms and RF Bandwidth settings of 16MHz and higher are supported.

- Set the Radio Collocation parameter to control parameters related to the internal or GPS Synchronization feature (see Radio Synchronization).

  This parameter can be enabled when an Exalt radio's Sync Out is connected to a collocated radio's Sync In, or when a GPS receiver is connected to Radio A. There are two additional features:

  – Set the Flywheel Period parameter to ‘Normal’ (default) or ‘Infinite.’ This is the period of time that the radio will run on the internal timing signal if the timing signal is lost.

    – The Normal parameter is a time period that allows the timing signal to be recovered. The default time to wait is set between 5 and 10 min. The system then resynchronizes to the signal without impact to traffic. If Normal is selected and timing is not recovered within the set time period, the system stops transmitting (loss of link) until timing is recovered. This prevents self-interference to local systems, but loses the link.

    – The Infinite parameter allows the radio to run on the internal clock source with no limit and attempts to resynchronize when the timing source is detected. This allows the link to continue to operate, however, if a signal is not detected within approximately 10 minutes, the radio may start to cause interference to other collocated systems, and other collocated systems may start to cause interference with it. If after this interval timing is restored, a temporary outage due to the resynchronization requirement may occur.

  – Set the Tx Timing Offset (µSec) parameter to allow the administrator to delay transmitter timing from the timing pulse by a fixed time, in microseconds. This is useful if multiple synchronized Exalt radio systems are present, separated by distance, such as when using a repeater. This delay is required to offset the difference in speed-of-light between the two locations. It is recommended to add a 5µSec delay for every mile of difference in path length. For example, if there is one link with no delay, delay the link within the field-of-view of the first link on the same or overlapping frequency channel accordingly so that it is synchronized, including the speed-of-light delay between the two sites.

- Antenna Port parameter

  – EX-4.5r GigE and EX-5r GigE: The antenna port selection toggles between the vertically and horizontally polarized integrated antennas or the dual-polarized setting. Ensure that both link ends match polarization.

  – EX-4.5r-c GigE and EX-5r-c GigE: The antenna port selection allows selection of either the V, H, or both connectors for dual-polarized operation.

Note: Changing the antenna port will temporarily interrupt traffic. The polarization of the antennas at each end must match at each end – adjust the far-end radio first, then the near-end radio.

- Buzzer Timeout (minutes) parameter creates an audio signal for antenna alignment. Turn on the buzzer continuously during antenna alignment or preset a period of time that the buzzer will sound. If the buzzer stops before alignment activities are complete, change the selection and press the Update button or select the ON option until alignment activities are complete.

Ethernet Interface Configuration Page

This page allows the administrator to set the alarm, and duplex settings of the Ethernet connection.

It also allows determination of the management information for in-band (carried over the air and available from both the PoE(1) and ETH2 connectors on either end of the link) or out-of-band (not carried over the air and only available from the PoE(1) connector)

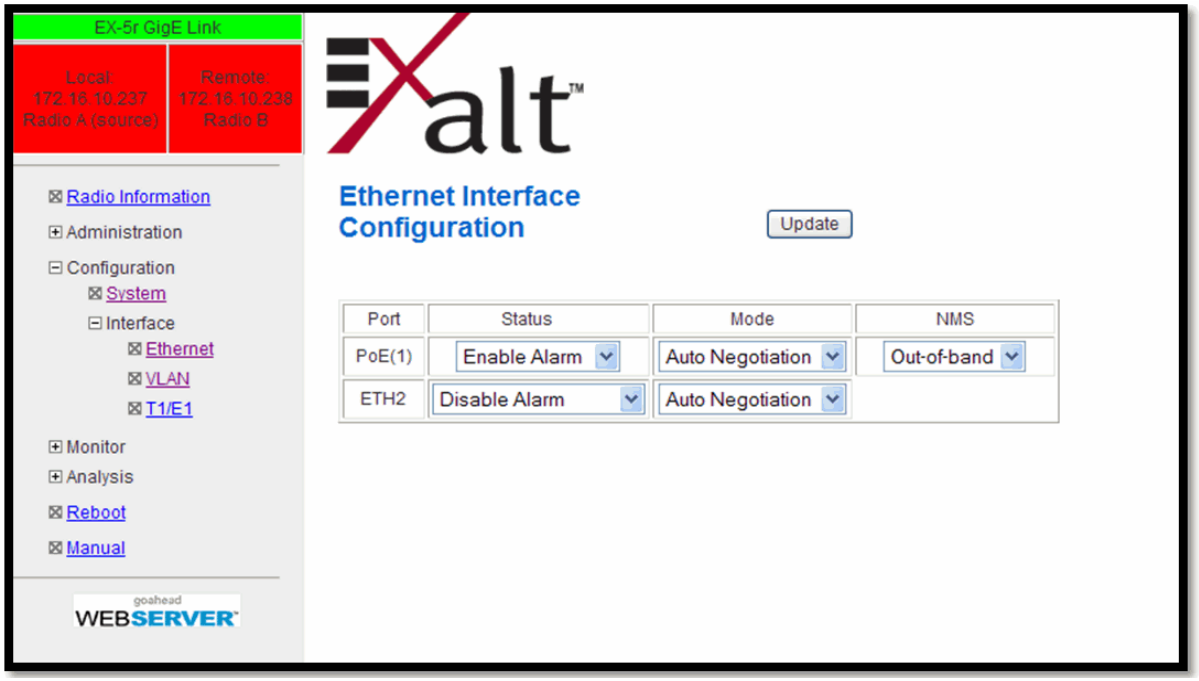

Figure 29 Ethernet Interface Configuration page

To ignore Ethernet alarms, disable the alarming of either or both connectors, accordingly. Muting the ETH2 connection is desirable when connected equipment senses Ethernet signaling and makes decisions (such as, spanning tree protocol enable) based on the Ethernet signal. If the ETH2 connection has muting enabled, the port is muted when the link is not active.

It may be desirable to disable the alarming of the ETH2 connector if it is not used.

For Gigabit Ethernet interfaces, configure the interface on the radio and the interface on the connected network equipment to Auto-Negotiate; the default setting for new radios. For 100BaseT (Fast Ethernet) interfaces, configure the interface on the radio and the interface on the connected network equipment to 100/Full; the default setting for new radios. It is not recommended for 100BaseT connections to be set to Auto-negotiate, as this can exhibit packet loss with an extremely adverse impact on throughput.

VLAN Configuration Page

VLAN is disabled as the default setting for Exalt radios. The Exalt radios still pass VLAN and non-VLAN traffic across the link, but do not examine the VLAN traffic or act upon it. Enable VLAN using the Exalt GUI for expanded VLAN support.

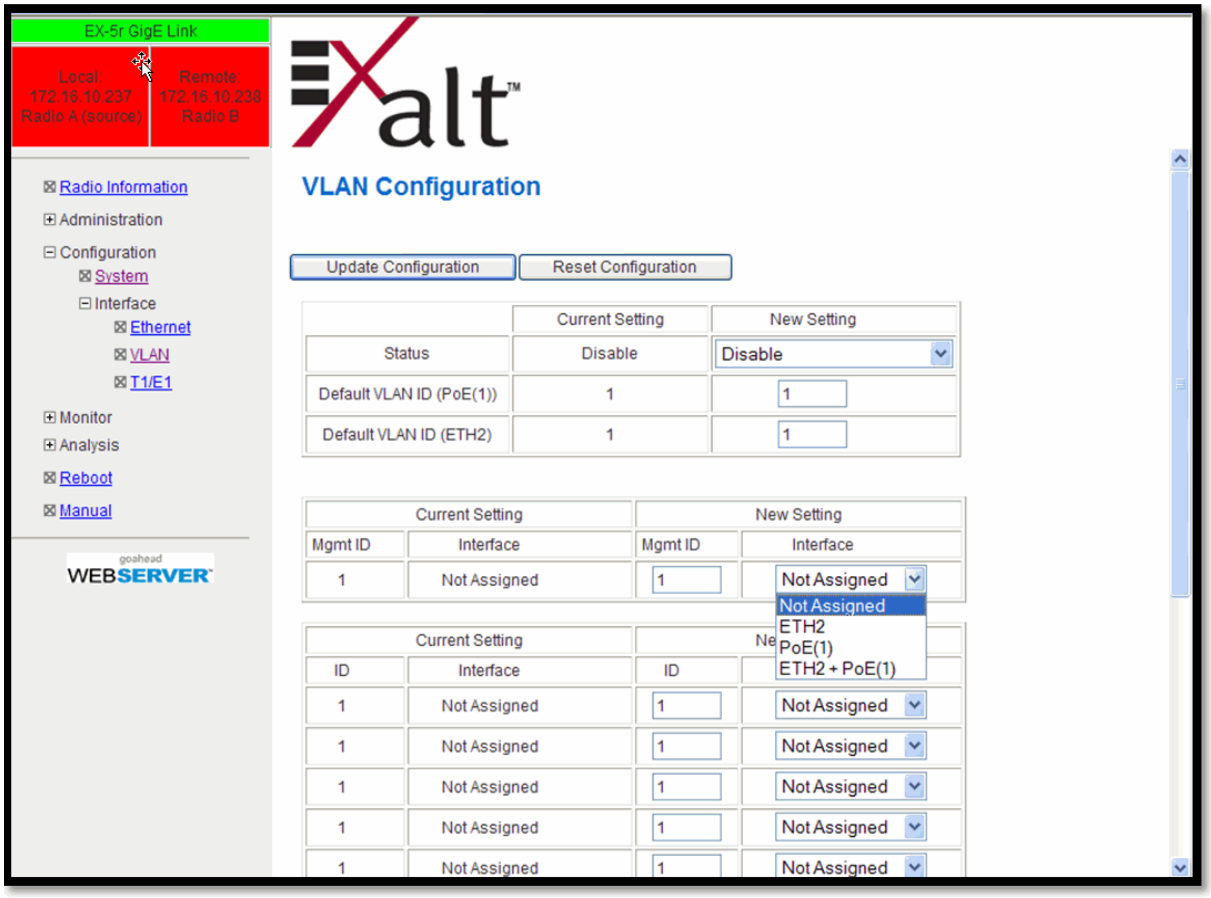

Figure 30 VLAN Configuration page

When VLAN is first enabled, the Ethernet interface ports are assigned as *Default VLAN*, until the ports are configured with specific VLAN IDs. For example, a specific VLAN for management access to the radio must be manually configured.

Note: Once a management VLAN is configured or modified and the Update button clicked, the management connection will likely be lost. The management connection to the radio must follow the configuration to the assigned VLAN. After configuring and enabling the management VLAN on the radio, reconfigure your network's management access to match the settings on the radio.

If any VLANs are configured in addition to the management VLAN, the radio treats the traffic that is not in the VLAN filter list in accordance with the selection made in the status setting. The **Block Untagged** selection only passes the VLAN IDs on the filter list; all other traffic is blocked. The **Pass Untagged** selection passes all untagged traffic transparently, and only blocks VLAN IDs not on the filter list. The **Tag Untagged** selection tags all untagged traffic with the selected default VLAN ID assigned in this table.

The management VLAN ID number is assigned in the second table, and can be used for either or both Ethernet interface on the radio. In the third table, up to 16 unique VLANs can be configured for filtering. VLAN ID numbering ranges from 1 to 4094.

VLAN configurations are maintained even when VLAN is disabled. That is, the VLANs can be configured and the configuration saved, even though they are not active until VLAN is enabled. Use the procedure in Reset to Critical Factory Settings to restore the management connection if a mistake was made assigning the management VLAN and access cannot be restored.

Note: Only one entry per VLAN ID is allowed. If the same VLAN ID is entered into the table more than once, the radio uses the first assignment found in the table and ignores duplicate entries.

T1/ E1 Configuration Pages

These pages allow the administrator to selectively enable or disable the T1 or E1 circuits, one at a time. For enabled T1/E1 circuits, additional configuration, including loopback functions, are available. Disable the unused T1 or E1 so that the alarms are turned off and more throughput is allocated to the Ethernet interface. Every enabled T1 or E1 input, even if there is no T1 or E1 signal present, reduces the aggregate throughput of the Ethernet interface by roughly 3Mbps (for T1) or 4Mbps (for E1).

This page toggles between T1 and E1, as required, by clicking the Set to T1 or Set to E1 button. A warning displays that a reboot is necessary, and the radio reboots if the administrator continues. *This will interrupt traffic.* It may be necessary to re-login to the radio after the reboot completes. T1/E1 mode self-coordinates across the link if the link is active. This means that it only needs to be set while connected at one end. In addition, enabling and disabling T1/E1 circuits also self-coordinates across the link if the link is active. If a link is not active and T1/E1 enabling is a mismatch when a link is first created, the Radio A configuration for T1/E1 enabling supersedes the settings on the Radio B configuration, and changes the settings on Radio B.

Note: Certain combinations of the TDD Frame Size, Link Distance, Mode, and Bandwidth parameter settings limit the number of T1/E1 circuits that can be carried by the radio. In these cases, certain fields on the T1/E1 Interface Configuration pages are not available, starting with the highest port number. For example, for a 4x T1/E1 radio version, if only three (3) circuits can be carried, port 4 is not available for configuration and is disabled. If only two circuits can be carried, both ports 3 and 4 are not available. Increasing the TDD frame size and Mode parameters, and/or increasing the Bandwidth parameter results in an increase in the supported number of T1/E1 circuits.

T1 Interface Configuration Page

This page allows the administrator to enable/disable each individual T1 channel, set the Line Build Out (LBO), Line Code (either AMI or B8ZS), and AIS enabling/disabling for each input. If enabled, the radio places an AIS code on the output of the associated interface if and when the link fails or when there is no T1 signal available from the far end to provide the user at the local end. Loopback controls are also provided (see T1/E1 Loopback).

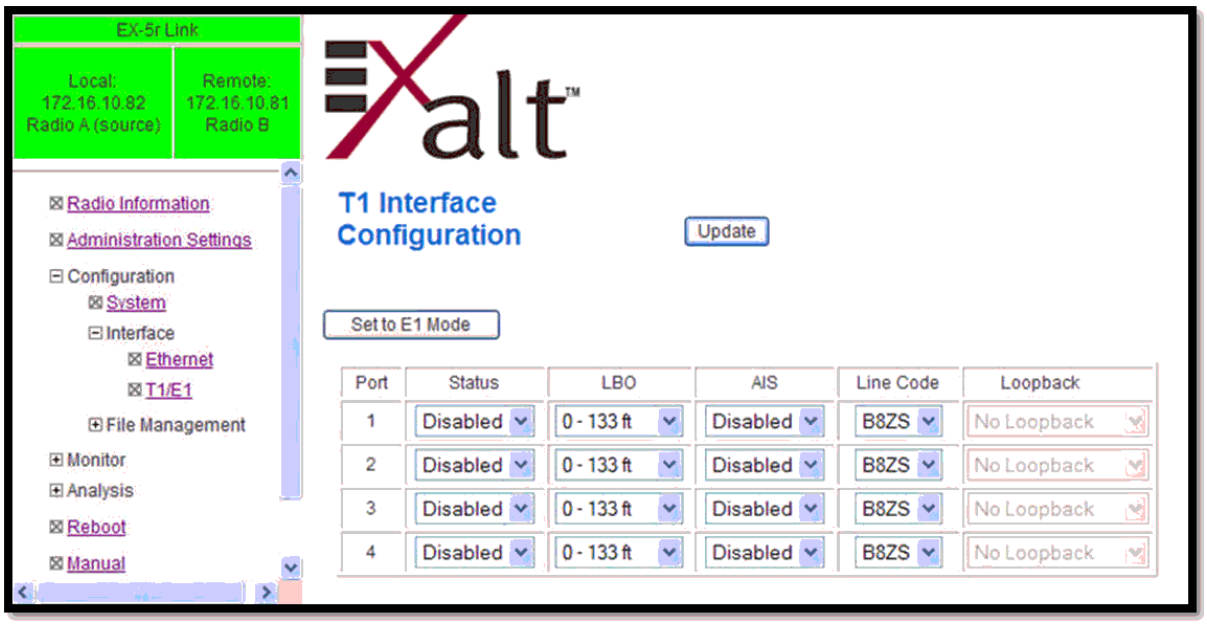

Figure 31 T1 Interface Configuration page

E1 Interface Configuration Page

This page allows the administrator to enable/disable each individual E1 channel. The AIS can also be enabled and disabled for each input. If enabled, the radio places an AIS code on the output of the associated interface if and when the link fails or when there is no E1 signal available from the far end to provide the user at the local end. Loopback controls are also provided (see T1/E1 Loopback).

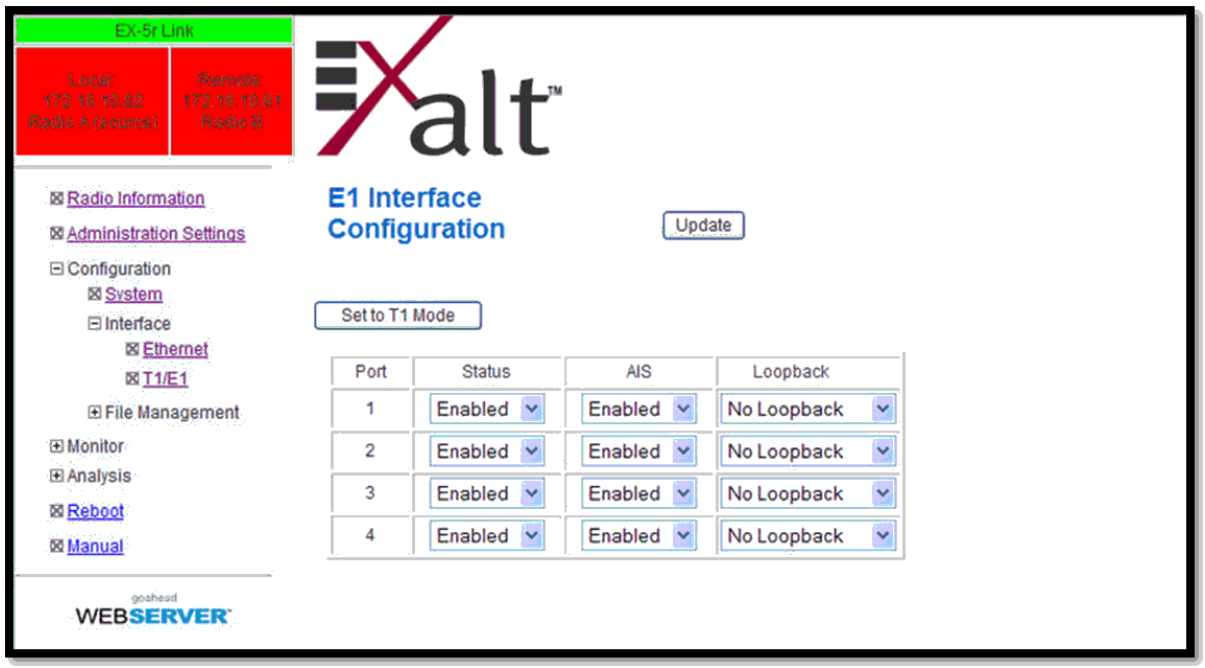

Figure 32 E1 Interface Configuration page

T1/ E1 Loopback

Loopback is provided for any enabled T1 or E1 port. As shown in Figure 33 and Figure 34, the choices are:

- No Loopback (default)
- External (local)
- External (remote)
- Internal

Note: Only one Internal loopback can be enabled at any time.

All loopback configurations control the loop at the Line Interface integrated circuit, which is the device wired directly to the front panel ports.

External loopback modes are used in conjunction with an external test source. The designation of 'local' or 'remote' refers to where the loopback is occurring relative to the location where the loopback is implemented. That is, on the radio being accessed, if External (remote) is selected, this loops the signal back at the remote radio interface back towards the local radio. Likewise, if External (local) is selected, the signal loops back at the local interface towards the remote radio (Figure 33 and Figure 34).

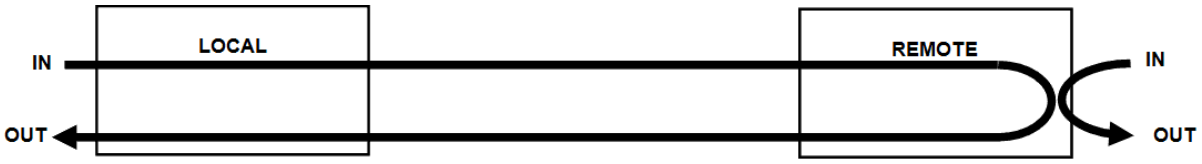

Figure 33 External (remote) loopback

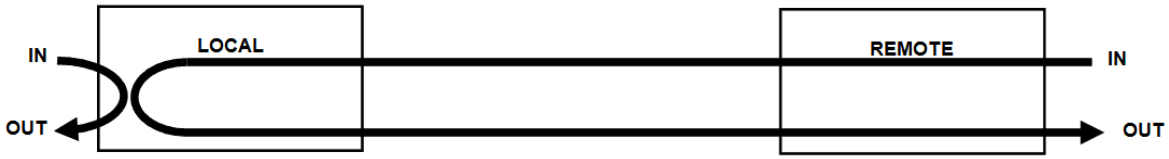

Figure 34 External (local) loopback

When a local T1/E1 port is configured for External (remote) loopback, it is the same as configuring the remote radio for External (local) loopback.

Internal loopback uses an internal test source, and sends the test source signal across the link, looped at the remote radio's interface, returned to the local radio, and looped at the local radio's interface back to the source. The inputs at both ends are looped back at the line level. Figure 35 illustrates the internal loopback function.

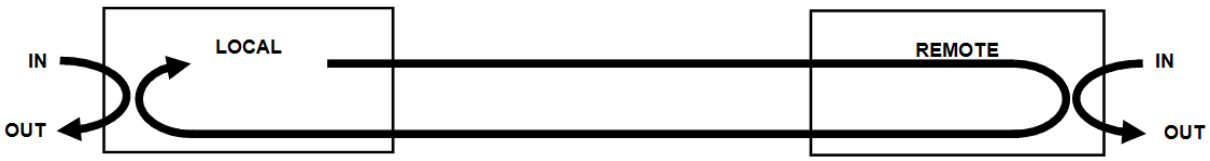

Figure 35 Internal loopback

GPS Information Page

This page provides information on how many GPS satellites are within the view of the Exalt GPS receiver. This page is active for implementations that include the GPS receiver connection for synchronization. This information can be helpful for troubleshooting GPS issues.

Figure 36 GPS Information page

Alarms Page

This page provides an easy-to-read summary of the alarm status of both local and remote radios. The colors on this page reflect the color of the alarms displayed on the radio front panel. However, additional detail displays on this page to aid in quick assessment of issues and status.

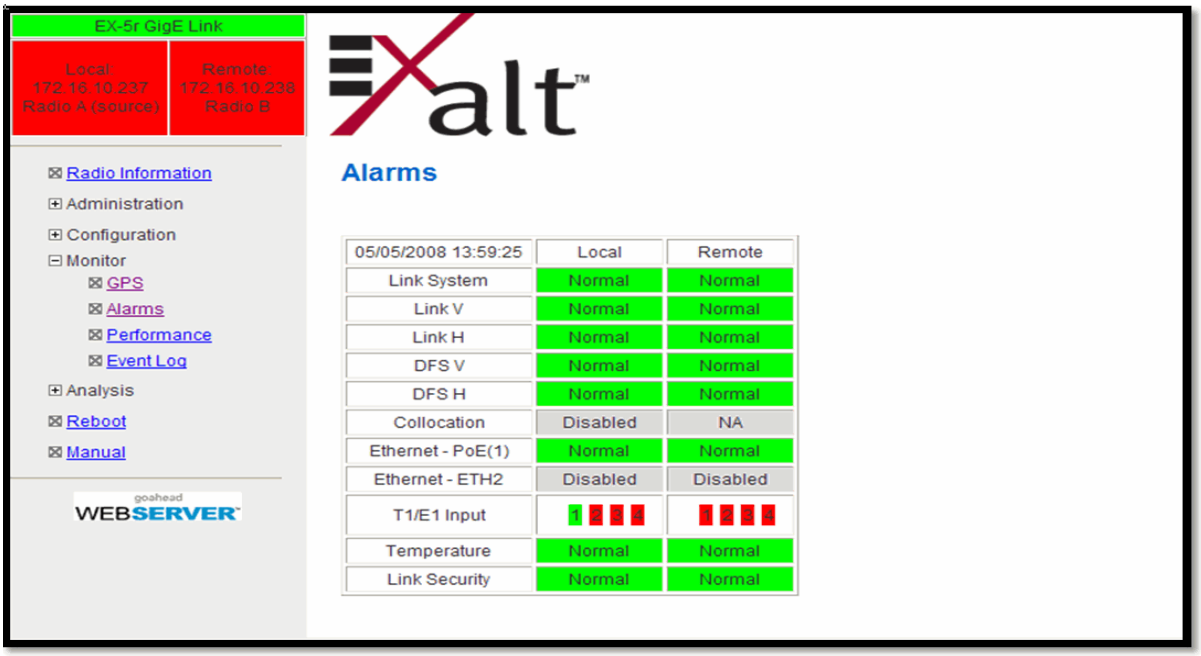

Figure 37 Alarms page

Table 6 lists alarm status conditions that appear on this page.

Table 6 Alarm status indicators

Label	Status
Link System	Indicates RF link status for the entire link (all active polarizations): • Green Solid = Error-free connection (BER<10e-6) • Yellow Solid = Errored connection (10e-3>BER >10e-6) • Red Solid = No link (BER>10e-3)
Link V	Same as Link System, but only for the Vertical polarization link connection.
Link H	Same as Link System, but only for the Horizontal polarization link connection.
DFS V	(5GHz models only) Indicates the status of the Dynamic Frequency Selection (DFS) for the Vertical polarization connection. • Green = No DFS activity, normal transmission • Red = Either CAC or NOP is in progress.
DFS H	(5GHz models only) Same as DFS V, but for the Horizontal polarization connection.
Collocation	Indicates the enabled/disabled status with Internal or GPS sync and current alarm status. • Green Solid = Sync enabled and sync input present • Yellow Solid = Sync enabled and missing proper sync input in flywheel operation period • Red Solid = Sync enabled and missing proper sync input signal and flywheel period expired

Table 6 Alarm status indicators (Continued)

Label	Status
Ethernet–PoE(1)	• Green Solid = Data present at PoE(1) connection • Off = No data present
Ethernet–ETH2	Same as PoE(1), but for the ETH2 connection.
T1/E1 Input	• Green = Enabled and connection present (clocking confirmed) • Red = Enabled and no connection present • Grey = Disabled or unavailable due to configuration
Link Security	• Green Solid = Link security key is matching at both ends • Yellow Solid = Link security key is mismatched at both ends
Temperature	• Green Solid = Normal temperature range • Yellow Solid = Exceeding normal temperature range

The Temperature alarm monitors the internal temperature of the unit based on specific points inside the radio chassis. It is normal for the internal temperature to be above the ambient temperature, so the temperature reading may be higher than the highest specified ambient temperature. When the internal electronics reach a point that is higher than the normal temperature rise at the highest ambient temperature, the temperature alarm turns yellow. Power down the radio as soon as possible, and investigate the cause of the temperature rise before the radio is put back into service. In almost all cases, a temperature alarm is due to an external cause.

Performance Page

This page provides statistical information about the performance of the system in relation to the integrity of the user data and the RF link. Where applicable, the Performance page shows 'system' performance as a whole, and provides separate performance information for the two polarizations: Vertical (V) and Horizontal (H).

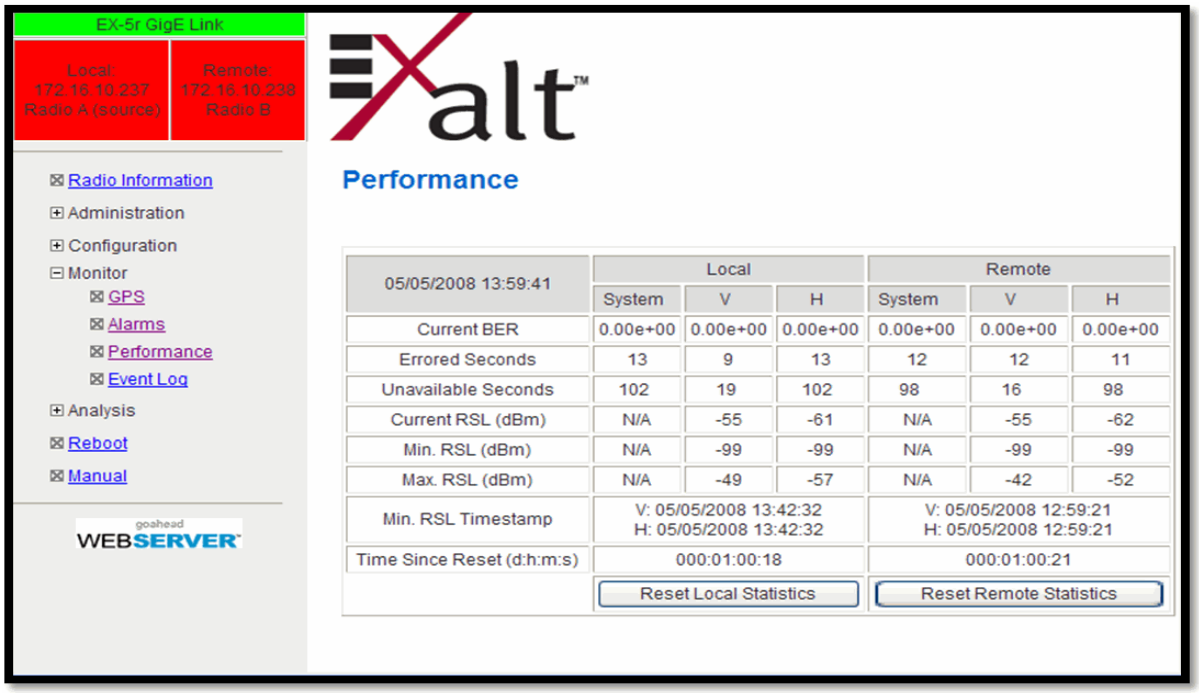

Figure 38 Performance page

- The Current BER field indicates the current bit error rate of the link. If the link is operating perfectly, this should indicate zero. Generally, the link should remain at a BER less than $1x10^{-6}$ (1 bit out of every million bits errored). This is the threshold performance specification and the standard to which the link was engineered. However, radio links can and are affected by weather, interference, and other external sources and will occasionally have a higher error rate. A link remains operational unless the BER exceeds $1x10^{-3}$ (1 bit out of every hundred bits errored). Consult the link design engineer for an understanding of the predicted error rate of the radio link as it has been designed.

  Many applications are unaffected by bit errors, but TDM circuits (for example, T1 or E1) are more sensitive. Also, if the link operator is providing a service guarantee, this value may need to be monitored or examined in cases of service issues. The behavior of BER in relation to other alarms or measurements and external events can be very helpful in troubleshooting activities.

- Errored Seconds (ES) indicates the total number of seconds that occurred where there was at least one bit error since the last time that the radio statistics counter was reset. Generally, ES are not a significant concern, so long as they are not continuous or above the anticipated performance based on the original link engineering goals. If ES are continuous or at a high rate, this is normally an indication of poor link performance due to poor RSL or interference, or severe impact by weather or other environmental factors. However, similar to the performance factors previously listed, ES can and will occur in any radio link. Once again, consult the link engineer to determine the original design goals, and compare actual performance to these expectations to determine if any improvements are necessary or if other problems may be causing excessive ES.

Note: Unavailable Seconds do not register as ES. In other words, the ES counter counts all seconds that are errored NOT INCLUDING the seconds that were classified as unavailable. The total number of seconds with errors or outages is the sum of ES and Unavailable Seconds.

- Unavailable Seconds (also called UAS) are similar to ES, but this counter keeps track of every second where the bit error rate equals or exceeds $1x10^{-3}$, as well as any seconds where there is a complete loss of radio communication, over the period since the last counter reset. If Unavailable Seconds are continuous or at a high rate, this is normally an indication of poor link performance due to poor RSL or interference, or severe impact by weather or other environmental factors. However, similar to the performance factors listed above, Unavailable Seconds can and do occur in any radio link. Consult the link engineer to determine the original design goals, and compare actual performance to these expectations to determine if any improvements are necessary or if other problems may be causing excessive Unavailable Seconds.
- Current RSL is the measurement of the received signal level at the radio antenna port. This is the measured level of the RF signal coming from the opposite end of the radio link. The link was engineered to a specific RSL by the link design engineer, and this RSL should be obtained during installation and remain relatively stable during the operation of the link. RSL can and will vary as a result of weather changes and other external sources, such as path obstructions. Once again, this variation was part of the original design to achieve a certain level of performance over time. Bit errors occur when the RSL falls to a level within roughly 3dB of the threshold specification. When the RSL falls below the threshold specification, the link disconnects and will not reconnect until the RSL is above the threshold specification. The behavior of RSL in relation to other alarms or measurements and external events can be very helpful in troubleshooting activities.
- Minimum RSL indicates the worst (lowest) received signal level that occurred since the last counter reset. It is helpful to know if the RSL dropped significantly from the normal level, or has reached a level near or below threshold.
- Minimum RSL Timestamp indicates the date and time when the Minimum RSL occurred. This is helpful for general troubleshooting, and especially comparing to items in the event log or diagnostic charts from the same time period.
- Maximum RSL indicates the best (highest) RSL that occurred since the last counter reset. This indicates the best performance of the radio link, which is normally equal to the installed value, and is usually the designed value.
- Time Since Reset indicates the amount of time passed since the last counter reset. This helps to quantify the seriousness of other statistics, such as ES and Unavailable Seconds, if there have been high numbers of ES and/or Unavailable Seconds over a relatively short period of time.

All end-of-link statistics on this page can be independently reset using the reset statistics button. It is good practice to reset the statistics at the time that the link is commissioned (after all antenna alignment is complete and stable RSL at designed levels is achieved, and no more system reboots are anticipated). Regularly review this page regularly, make records of the performance, and reset the statistics so that the counters can more precisely pinpoint issues.

Note: Resetting statistics from one end also resets the statistics for the same radio at the opposite end. That is, if the Local statistics are reset, logging into the remote end shows the Remote statistics on that end (which is the local radio in the first condition) as being reset at the same time.

Event Log Page

Use this page to review a list of the events logged by the radio. The following items are listed in the event log:

- Alarms
- Alarms clearing (Normal)
- Radio Reboots

Every event is tagged with the time that the event occurred, and a severity and type. The event log also allows filtering to limit the view of the log to the lowest level of desired information. For example, a filter level of Minor displays Minor, Major, and Critical severity events.

The log contains the last 1000 events. Events are deleted on a FIFO basis, erasing the oldest entries to make room for the newest entries.

The event log can be cleared and be downloaded from the radio (some models may require a software upgrade to enable this feature). A screen capture of the browser window can serve as a useful record.

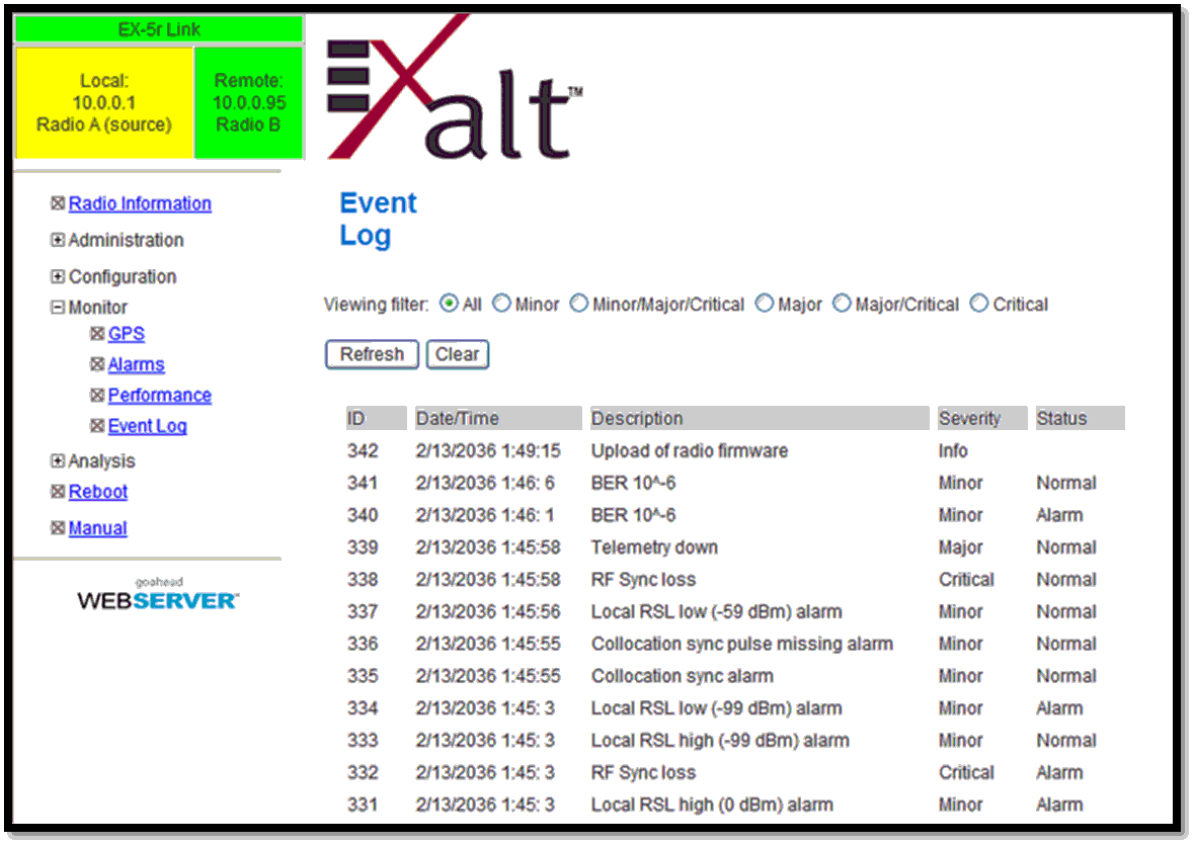

ID	Date/Time	Description	Severity	Status
342	2/13/2036 1:49:15	Upload of radio firmware	Info	
341	2/13/2036 1:46: 6	BER 10^-6	Minor	Normal
340	2/13/2036 1:46: 1	BER 10^-6	Minor	Alarm
339	2/13/2036 1:45:58	Telemetry down	Major	Normal
338	2/13/2036 1:45:58	RF Sync loss	Critical	Normal
337	2/13/2036 1:45:56	Local RSL low (-59 dBm) alarm	Minor	Normal
336	2/13/2036 1:45:55	Collocation sync pulse missing alarm	Minor	Normal
335	2/13/2036 1:45:55	Collocation sync alarm	Minor	Normal
334	2/13/2036 1:45: 3	Local RSL low (-99 dBm) alarm	Minor	Alarm
333	2/13/2036 1:45: 3	Local RSL high (-99 dBm) alarm	Minor	Normal
332	2/13/2036 1:45: 3	RF Sync loss	Critical	Alarm
331	2/13/2036 1:45: 3	Local RSL high (0 dBm) alarm	Minor	Alarm

Figure 39 Event Log page

Diagnostic Charts Page

Use this page as an aid in troubleshooting. This page illustrates the historical (and current) performance for three parameters: RSL, Radio Temperature, and BER. For RSL and BER, the user can select to see each polarization separately (Vertical and Horizontal) or summed together for an overview of total system performance.

The horizontal scale illustrates 120 points of time measurement and is synchronized on all three graphs. The scale displays in minutes, hours, or days from the last two hours (120 minutes), five days (120 hours), or four months (120 days). All information is stored, so all of these periods are available for short- and long-term performance analysis. The right side of a graph represents the most recent measurement, and data 'marches' from the right-to-left at every interval.

The vertical scale of each chart independently scales to show the maximum resolution based on the maximum variation of the data over the selected time measurement.

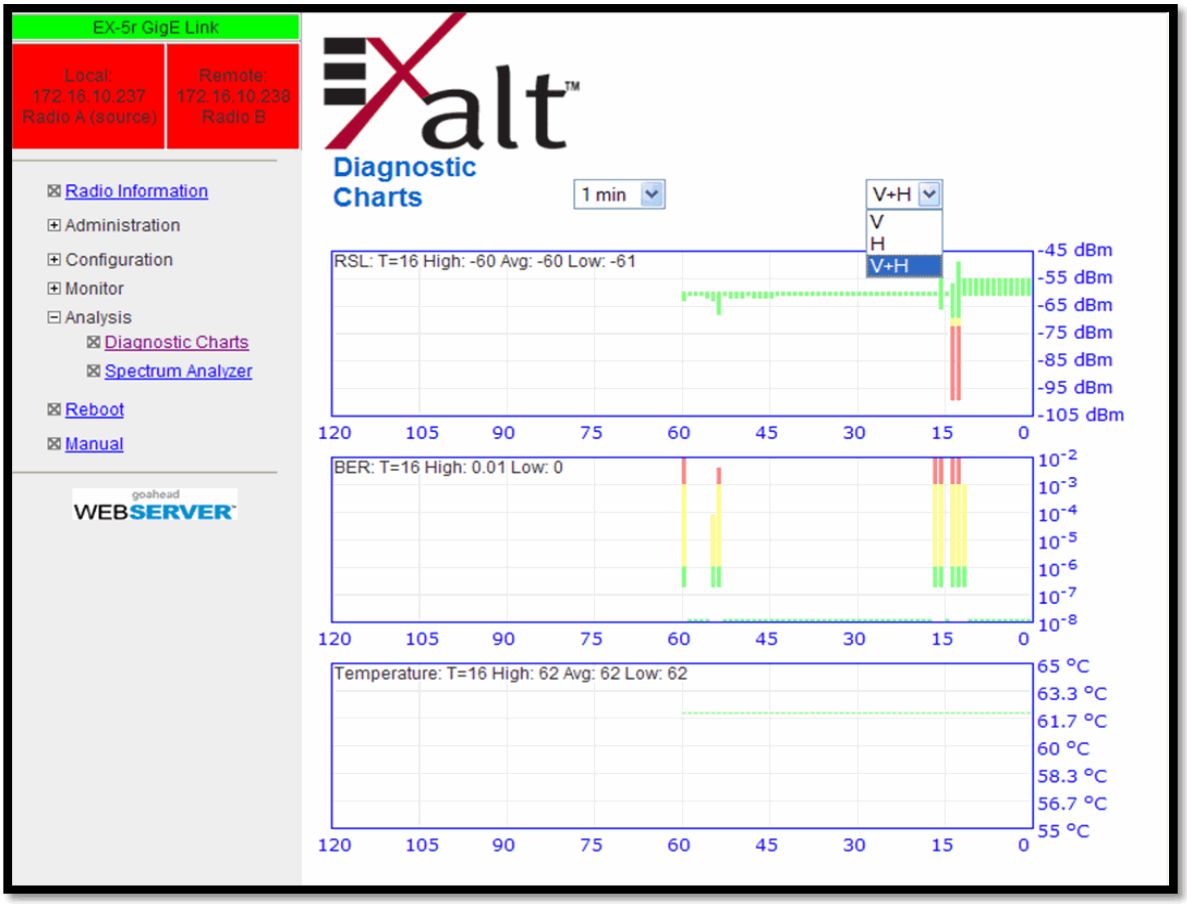

Figure 40 Diagnostic Charts page

Use the cursor to point to any spot on any of the three charts, and all three charts illustrate the measurements taken for that time interval in the upper-left corner of each chart. The time interval is indicated by T=(value). This is followed by the value of the measurement, listing the highest value, lowest value and average value measured over that time interval.

For example, in Figure 40 the displayed time interval is minutes, and the cursor is held at the T=17 mark on the horizontal axis. The measurements shown indicate performance from 17 minutes ago. The high/low/average values shown on each chart are measurements made across that specific one-hour interval.

Changes in RSL often have an impact on BER, and this can be confirmed by looking for synchronized events. When BER events occur without corresponding changes in RSL, this normally indicates interference, atmospheric changes, transmission system issues (such as problems with cables, connectors or antennas), or possibly radio hardware problems.

It is also useful to help determine if changes in radio temperature are occurring, and if they are having any impact on RSL or BER. If the radio is mounted in an environmentally controlled location, this has less relevance. However, temperature monitoring can be helpful to ensure that the radio is operating within specifications.

Use the independent V (Vertical) and H (Horizontal) selections to diagnose issues that might be dependent upon polarization or only effecting part of the system. Comparing the two can indicate if the issues are the same independent of polarization.

Spectrum Analyzer Page

The spectrum analyzer feature provides a useful pre-planning and troubleshooting tool. Perform a spectrum analysis after deployment and just before commissioning to maintain a record of the spectrum at the time of deployment. Figure 41 shows the Spectrum Analyzer page. Note that both polarizations are independently measured when a scan is performed. Generally, a clear spectrum is required for both polarizations for the radio to run in dual-polarization mode.

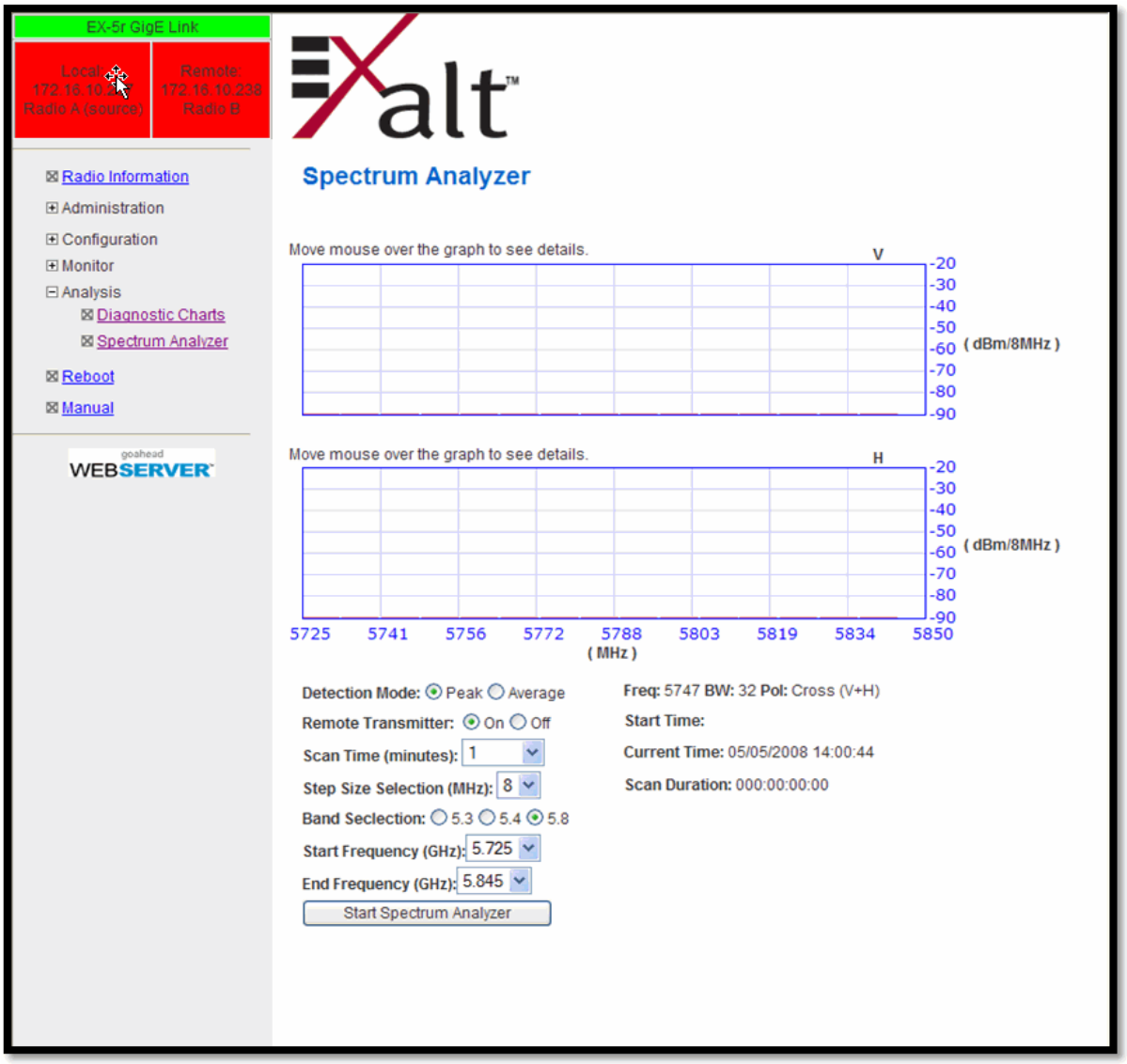

Figure 41 Spectrum Analyzer page

While a professional spectrum analyzer provides higher levels of control and precision for pre-planning, the Spectrum Analyzer page allows evaluation of the RF spectrum as seen at the radio's RF input port prior to deployment. This is useful for pre-planning the center frequency and occupied bandwidth, and to determine polarization and antenna type and mounting locations.

For troubleshooting, enable the spectrum analyzer to scan the desired segment or full band of the frequency range. Select the step size and set the remote radio transmitter ON or OFF. This allows viewing of the *clean* spectrum without the remote transmitter on and a comparison of the remote transmitter in the midst of other signals.

Note: Enabling the spectrum analyzer interrupts all radio traffic for the duration of the analysis. In addition, access to the radio's GUI may also be interrupted, depending on the location of the interfaced computer relative to the radio where the spectrum analysis is occurring. The GUI is available at the completion of the spectrum analysis.

Use the smallest step size to obtain the finest view of the spectrum. The spectrum analyzer can be set to match the start and stop frequency for a *dwell* mode. Peak and average detection modes are also available. Peak detection is helpful for capturing intermittent events such as pulsed emissions.

It is best to set the Scan Time option to a time value as opposed to using the 'infinity' setting. If your management computer is connected to the radio through the radio link, access to the GUI is interrupted during the duration of the analysis.

Note: The result of selecting infinity may be complete loss of contact to that radio and may require a physical visit to the radio location to disable the spectrum analyzer.

The spectrum analyzer graph displays received signals in red or green (Figure 42), normalized in dBm to the resolution bandwidth of the analyzer. Red indicates a peak hold function. This is the highest level detected during the entire scan. Green indicates the last value measured at that frequency.

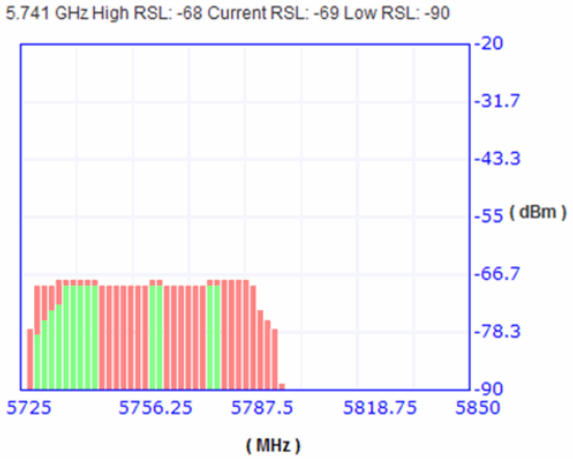

Figure 42 Spectrum analyzer graph example

A completely green vertical box indicates that the signal maintained a steady level for the entire scan or that the last scan measured at a strong or stronger level than the rest of the analysis. A completely red vertical box indicates that there was a signal at some point during the scan, but that the signal was not detected at the last scan. A graph displaying green on the lower part and red at the upper part indicates that at some time during the scan, a signal was detected at a higher level than was detected during the last scan.

The last spectrum analyzer scan performed displays in this page until the radio is rebooted. You can do a screen capture for record keeping and for comparison to future analyses. The time and date of the analysis displays on the page, which is handy as a reference in a screen capture.

Reboot Page

Use this page to reboot the radio. The function may never be required, but can be used in emergencies. All configurations that require a reboot automatically reboot on administrator confirmation.

Figure 43 Reboot page

Manual Page

The manual (this document or the version that matches the installed firmware) is available within the GUI. Adobe Acrobat Reader 5.5 or higher is required (go to www.adobe.com to download Acrobat Reader). Click the Manual link to display the manual within the browser window. Once the manual displays, click the save button on the PDF toolbar to download the manual locally.

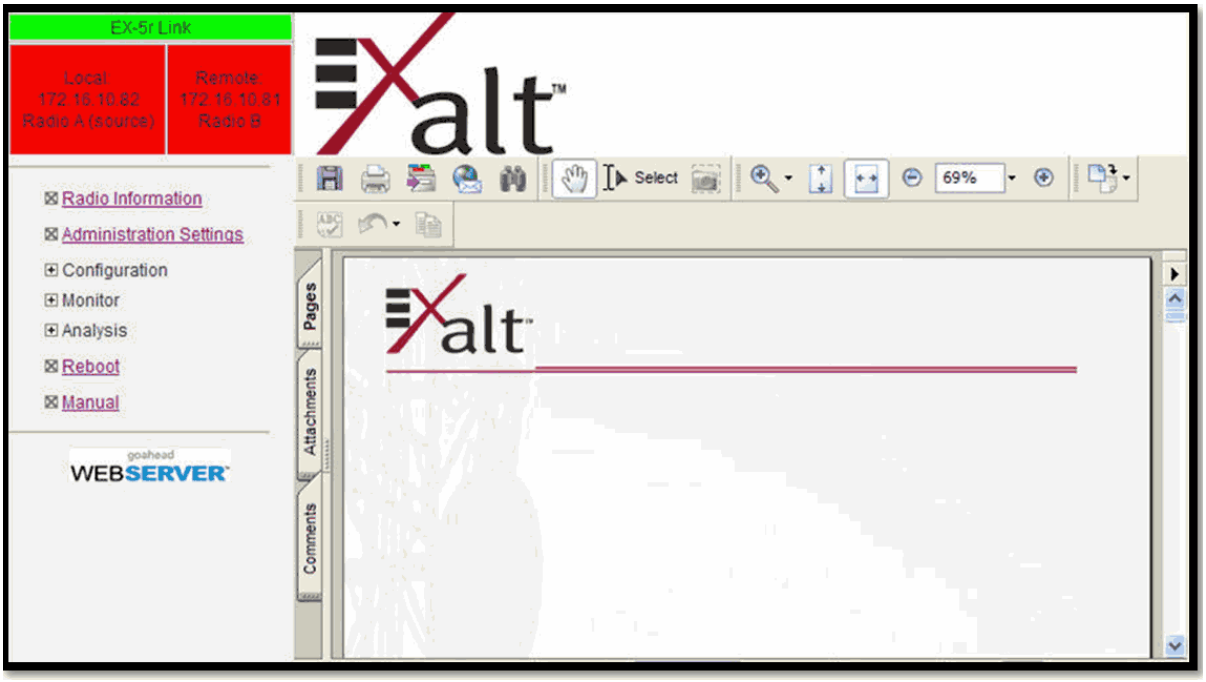

Figure 44 Manual page

Specifications

This section presents specifications for the EX-r Series GigE of Digital Microwave Radios.

Physical Specifications

Integrated Antenna Models

Physical Configuration	Outdoor unit (ODU)
Dimensions (H x W x D)	14.6 x 14.6x 3.8"/37 x 37 x 9.7 cm
Weight	12 lbs; 5.5 kg
Operating Temperature	–40 to +149°F /–40 to +65°C
Altitude	15,000'/4.6 km
Humidity	100% condensing
Environmental	NEMA4/IP56

Connectorized Antenna Models

Physical Configuration	Outdoor unit (ODU)
Dimensions (H x W x D)	14.6 x 14.6x 2.5"/37 x 37 x 6.4 cm
Weight	12 lbs; 5.5 kg
Operating Temperature	–40 to +149°F /–40 to +65°C
Altitude	15,000'/4.6 km
Humidity	100% condensing
Environmental	NEMA4/IP56

Common System Specifications

Tuning Resolution	1MHz; 5MHz for and some regulatory domains
Power Control Step Size	0.5dB
Selectable Modulation Modes	Mode 1 (QPSK); Mode 2 (16QAM)
Selectable Frame Lengths (ms)	0.5, 1, 2, 2.5, 4, 5

Maximum Aggregate User Capacity, single polarization

Mbps	Mode 1	Mode 2
8/10MHz	13	27
16/20MHz[a]	27	55
32MHz	55	110
64MHz[a]	110	220

Maximum Aggregate User Capacity, dual-polarized

Mbps	Mode 1	Mode 2
8/10MHz	26	55
16/20MHz[a]	55	108
32MHz	110	220
64MHz[a]	220	440

Error Floor	10^{-12}
Frequency Stability	$\pm$7 ppm
Link Security	96-bit Security Code

a. Not all bandwidth and mode combinations are available on all radio models. For some regulatory domains, the 8MHz Bandwidth setting displays as 10MHz, and the 16MHz Bandwidth setting displays as 20MHz. Some radios may require specific software license keys, which can be purchased from your authorized Exalt representative.

System Specifications, 4.5GHz Band

Frequency Band	4400 to 4900MHz
Output Power (at full power)	+24dBm (0.25W) Mode 1, +21dBm Mode 2 (0.13W)
Output Power (at minimum power)	+4dBm
Selectable Channel Bandwidths	8MHz, 16MHz, 32MHz, 64MHz[a]

Receiver Threshold (BER=10^{-6})

dBm	Mode 1	Mode 2
8MHz	-86	-78
16MHz	-83	-75
32MHz	-80	-72
64MHz[a]	-77	-69

Maximum RSL	Mode 1: -25dBm error-free; 0dBm no damage
Regulatory Compliance	FCC Part 15, EN 60950-1, UL 60950-1

Emission Designator(s)

8MHz	7M8W7D
16MHz	15M7W7D
32MHz	30M9W7D
64MHz[a]	60M8W7D

a. Certain combinations of Bandwidth, Mode, and Cross-polarization are enabled through software option.

System Specifications, 5.3GHz Band

Frequency Band	5250 to 5350MHz
Tunable Range	5260 to 5332MHz
Output Power (at full power)	+13dBm (0.02W)
Output Power (at minimum power)	-7dBm
Selectable Channel Bandwidths	8MHz, 16MHz, 32MHz, 64MHz[a]

Receiver Threshold (BER=10^{-6})

dBm	Mode 1	Mode 2
8MHz	-86	-78
16MHz	-83	-75
32MHz	-80	-72
64MHz[a]	-77	-69

Maximum RSL	Mode 1: -25dBm error-free; 0dBm no damage
Non-overlapping channels	8MHz: 10; 16MHz: 5; 32MHz: 2; 64MHz[a]: 1
Regulatory Compliance	FCC 15.407; IC RSS-210
FCC ID	TTM-105P25M
IC ID	6254A-105P25R

Emission Designator(s)

8MHz	7M8W7D
16MHz	15M7W7D
32MHz	30M9W7D
64MHz[a]	60M8W7D

a. A firmware option is required to enable 64MHz BW in jurisdictions where it is permitted. For some regulatory domains, the 8MHz Bandwidth setting displays as 10MHz, and the 16MHz Bandwidth setting displays as 20MHz.

System Specifications, 5.4GHz Band

Frequency Band	5470 to 5725 MHz
Tunable Range	5488 to 5715 MHz
Output Power (at full power)	+13dBm (0.02W)
Output Power (at minimum power)	-7dBm
Selectable Channel Bandwidths	8MHz, 16MHz, 32MHz, 64MHz[a]

Receiver Threshold (BER=10^{-6})

dBm	Mode 1	Mode 2
8MHz	-86	-78
16MHz	-83	-75
32MHz	-80	-72
64MHz[a]	-77	-69

Maximum RSL	Mode 1: -25dBm error-free; 0dBm no damage
Non-overlapping channels	8MHz: 29; 16MHz: 14; 32MHz: 7; 64MHz[a]: 3
Regulatory Compliance	FCC 15.407; IC RSS-210; ACMA
FCC ID	TTM-105P25M
IC ID	6254A-105P25R

Emission Designator(s)

8MHz	8M3W7D
16MHz	16M7W7D
32MHz	33M0W7D
64MHz[a]	65M0W7D

a. A firmware option is required to enable 64MHz BW in jurisdictions where it is permitted. For some regulatory domains, the 8MHz Bandwidth setting displays as 10MHz, and the 16MHz Bandwidth setting displays as 20MHz.

System Specifications, 5.8GHz Band

Frequency Band	5725 to 5850 MHz
Tunable Range	5731 to 5844 MHz
Output Power (at full power)	+24dBm (0.25W), Mode 1 +21dBm (0.13W), Mode 2
Output Power (at minimum power)	+4dBm
Selectable Channel Bandwidths	8MHz, 16MHz, 32MHz, 64MHz[a]

Receiver Threshold (BER=10^{-6})

(dBm)	Mode 1	Mode 2
8MHz	-86	-78
16MHz	-83	-75
32MHz	-80	-72
64MHz[a]	-77	-69

Maximum RSL	Mode 1: -25dBm error-free; 0dBm no damage
Non-overlapping channels	8MHz: 15; 16MHz: 7; 32MHz: 3; 64MHz[a]: 1
Regulatory Compliance	FCC 15.407 (b) (4) (ii); IC RSS-210; ACMA
FCC ID	TTM-105P25M
IC ID	6254A-105P25R

Emission Designator(s)

8MHz	8M4W7D
16MHz	16M7W7D
32MHz	33M1W7D
64MHz[a]	64M5W7D

a. A firmware option is required to enable 64MHz BW in jurisdictions where it is permitted. For some regulatory domains, the 8MHz Bandwidth setting displays as 10MHz, and the 16MHz Bandwidth setting displays as 20MHz.

Interfaces

RF (x2 for EX-4.5r-c GigE and EX-5r-c GigE)

Connector	N-type female
Impedance	50 Ohms

TDM (x2, 2 interfaces each)

Connector	RJ-45 (RJ48C), female
T1 Impedance	100 Ohms, balanced
T1 Line Codes	AMI, B8ZS, selectable
T1 LBO Settings (in ft.)	0-133, 133-266, 266-399, 399-533, 533-655
T1 Clocking Speed	1.544 Mbps
T1 Compliance	ANSI T1.102-1987; ITU-T; G.823; GR-49T-CORE
E1 Impedance	120 Ohms, balanced
E1 Line Codes	HDB3
E1 Clocking Speed	2.048 Mbps
E1 Compliance	CEPT-1; G.703; ITU-T-G703

Ethernet (x2)

Connectors	RJ-45, female, auto-MDIX
Interface Speed	10, 100, or 1000 Mbps
Duplex	Half, full, auto, selectable
Compliance	802.3

Sync-Out

Connector	RJ-45, female
Signal	0.5 to 5µsec pulse, based on frame size setting

Sync-In

Connector	RJ-45, female
Signal	From Sync-out or 1pps (GPS)

Power — Power Injector

Connector	6-pin barrier strip
Input Voltage	48VDC
Consumption	<65 W (1.35A)

Integrated Antenna

Gain	24dBi (midband, EX-5r GigE) 21dBi (midband, EX-4.5r GigE)
3dB Beamwidth	9 degrees (EX-5r GigE) 10 degrees (EX-4.5r GigE)
Polarization	Switch-selectable Vertical or Horizontal or Cross

201872-003Interface Connections

This section provides the pin number assignment and wiring information for the connectors on the r-Series radios. All connectors are shown as viewed from the radio front panel, as shown in Figure 45.

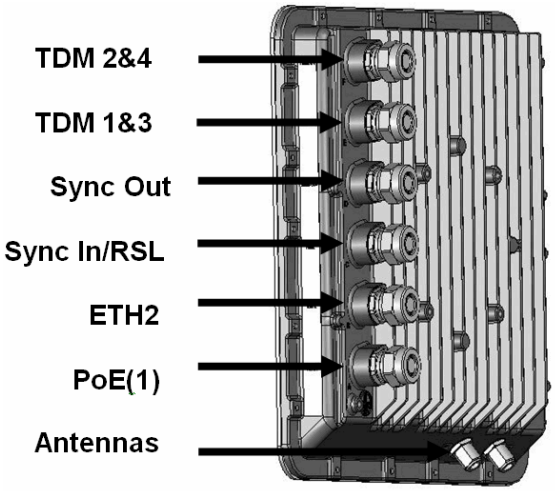

Figure 45 EX-r Series GigE connector orientation

TDM Connections

There are two connectors for TDM; each connector has two TDM circuits available. Figure 46 illustrates the pin orientation and functionality of these connectors. These connectors are disabled on the IP version radios.

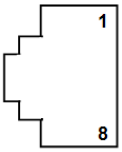

Pin	Function
1	Tip Out (from radio) – Ch.1 & 2
2	Ring Out (from radio) – Ch.1 & 2
3	Tip Out (from radio) – Ch.3 & 4
4	Tip In (to radio) – Ch.1 & 2
5	Ring In (to radio) – Ch.1 & 2
6	Ring Out (from radio) – Ch.3 & 4
7	Tip In (to radio) – Ch.3 & 4
8	Ring In (to radio) – Ch.3 & 4

Figure 46 TDM connectors

RSL & Sync In Connector

This connector can be used during the antenna alignment process, to provide a received signal level (RSL) voltage to a voltmeter. The connector is also used for connection to the Sync Out connector from a neighboring radio or to an optional Exalt GPS antenna for the purposes of GPS synchronization. Figure 47 illustrates the pin orientation and functionality for this connector.

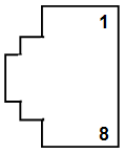

Pin	Function
1	+5V out to GPS antenna
2	Ground
3	Tx Data to GPS antenna
4	Enable signal to GPS antenna
5	Rx Data from GPS antenna
6	Input sync signal
7	Received Signal Level (RSL)
8	Unused

Figure 47 RSL & Sync In connector

Power/ Ethernet Connector

This connector is the primary connector on the radio, and must be connected to provide power to the radio, and primary Ethernet communications for traffic and Ethernet. Figure 48 illustrates the pin orientation and functionality for this connector.

The Ethernet connector implements Auto-MDIX, and therefore either ‘straight’ or ‘crossover’ Ethernet cables may be used, independent of the wiring of the connected device. The wiring follows typical wiring for Power-over-Ethernet (PoE), however the power consumption requirement for the r-Series radio does not allow for ‘standard’ (802.3af) PoE, and only the Exalt power injector shall be used. In addition, the Exalt power injector provides critical reset capability that would not be available from a generic PoE injector, even if the power consumption requirement is met.

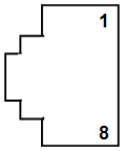

Pin	Function
1	Paired with Pin 2
2	Paired with Pin 1
3	Paired with Pin 6
4	+DC Power (48V) In
5	+DC Power (48V) In
6	Paired with Pin 3
7	-DC Power (48V) In
8	-DC Power (48V) In

Figure 48 Power/Ethernet connector

Ethernet 2 Connector

This is the secondary connector for Ethernet on the radio. Use it to connect other networking equipment to the radio system or for the primary data interface when the Power/Ethernet connector is being used for out-of-band management applications. The pin assignments are the same for this connector as the PoE(1) connector, but without any power connections.

Antennas

Table 7 lists antennas supported by the 5r-c GigE models for use in the USA. In some countries, antennas exceeding a certain level of gain may be unlawful. Refer to RF Output Power Setting for details on regulatory limits.

Table 7 Supported antennas

Manufacturer	Model #	Description	Midband Gain (dBi)	3dB (Azimuth/Elevation) Beamwidth (degrees)
Andrew	P2F-52-N	2-foot Dish	29.4	5.4
Andrew	PX2F-52-N	2-foot Xpol Dish	29.4	5.4
Andrew	P3F-52-N	3-foot Dish	33.4	3.8
Andrew	PX3F-52-N	3-foot Xpol Dish	33.4	3.8
Andrew	P4F-52-N	4-foot Dish	34.9	3.0
Andrew	PX4F-52-N	4-foot Xpol Dish	34.9	3.0
Andrew	HP2F-52-NPA	2-foot HP Dish	29.0	5.4
Andrew	HPX2F-52-NPA	2-foot Xpol HP	29.0	5.4
Andrew	HP3F-52-NPA	3-foot HP Dish	33.0	3.8
Andrew	HPX3F-52-NPA	3-foot Xpol HP	33.0	3.8
Andrew	HP4F-52-NPA	4-foot HP Dish	34.5	3.0
Andrew	HPX4F-52-NPA	4-foot Xpol HP	34.5	3.0
Andrew	HP6F-52-NPA	6-foot HP Dish	37.2	1.8
Andrew	HPX6F-52-NPA	6-foot Xpol HP	37.2	1.8
Gabriel	DFPD2-52	2-foot Panel	28.0	4.6
Gabriel	QF2-52-N	2-foot Dish	28.5	5.6
Gabriel	QF2.5-52-N	2.5-foot Dish	31.2	4.4
Gabriel	QF4-52-N	4-foot Dish	34.8	2.7
Gabriel	QFD2-52	2-foot Xpol Dish	28.4	5.6
Gabriel	QFD2.5-52	2.5-foot Xpol Dish	31.1	4.4
Gabriel	QFD4-52	4-foot Xpol Dish	34.7	2.7
Gabriel	HQF2-52-N	2-foot HP Dish	28.2	5.7
Gabriel	HQF4-52-N	4-foot HP Dish	34.4	2.8
Gabriel	HQF6-52-N	6-foot HP Dish	37.4	1.9
Gabriel	HQFD2-52	2-foot Xpol HP	28.1	5.7
Gabriel	HQFD2.5-52	2.5-foot Xpol HP	30.7	4.5
Gabriel	HQFD4-52	4-foot Xpol HP	34.3	2.8
Gabriel	HQFD6-52	6-foot Xpol HP	37.3	1.9
MTI	MT-486004	18-inch Panel	26.0	6.0
MTI	MT-486001	2-foot Panel	28.0	4.5
Radio Waves	FP2-5-28	2-foot Panel	28.0	4.5
Radio Waves	SP2-5.2	2-foot Dish	29.0	6.1
Radio Waves	HP2-5.2	2-foot HP Dish	28.6	6.1
Radio Waves	SP3-5.2	3-foot Dish	32.0	4.0
Radio Waves	SP4-5.2	4-foot Dish	34.8	3.0
Radio Waves	SPD2-5.2	2-foot Xpol Dish	28.1	6.2

Table 7 Supported antennas (Continued)

Manufacturer	Model #	Description	Midband Gain (dBi)	3dB (Azimuth/Elevation) Beamwidth (degrees)
Radio Waves	SPD3-5.2	3-foot Xpol Dish	31.1	4.2
Radio Waves	SPD4-5.2	4-foot Xpol Dish	34.4	3.1
Radio Waves	SPD6-5.2	6-foot Xpol Dish	37.5	2.1
RFS	SPF2-52A	2-foot Dish	27.9	6.2
RFS	SPF3-52A	3-foot Dish	31.4	4.2
RFS	SPF4-52A	4-foot Dish	33.9	3.1
RFS	SPF6-52A	6-foot Dish	37.4	2.1
RFS	SDF4-52A	4-foot HP Dish	33.9	3.1
RFS	SDF6-52A	6-foot HP Dish	37.4	2.1
RFS	MA0528-28AN	2-foot Panel	28.0	4.5

Troubleshooting

This section provides information regarding troubleshooting of common issues and alarms on these radios. Exalt Digital Microwave Radio systems are designed by Exalt's expert engineers with extensive experience through multiple generations of microwave radio design. These new-generation systems contain extensive diagnostic tools, alarm indications, and troubleshooting aids. And, as compared to other systems in their class, are easier to install, maintain, and troubleshoot. The GUI provides information to aid in troubleshooting (see Diagnostic Charts Page).

Contact Exalt Customer Care for further assistance with issues with your Exalt radio and with suggestions on how the radio and documentation can be improved.

General Practices

Troubleshooting a microwave radio link can be a complex task. Approach troubleshooting as a process of elimination, and first determine which portions of the system are operating properly.

In a vast majority of cases, failures or poor performance of microwave links is attributed to something other than the microwave radio hardware. In this respect, the back-to-back bench test (see Back-to-back Bench Testing) is very important to determine if radio hardware is operating properly and eliminate many variables in the troubleshooting process.

If a back-to-back bench test fails, then the radio hardware is either broken or the radios are improperly configured. Upgrade the radio to the most current release of firmware, and/or reset the radio to its critical factory settings, following the quick start guide instructions and those in Configuration and Management, helps to confirm if configuration issues cause failure. The most common issues with microwave radio links are:

- An improperly terminated RF cable
- Multipath propagation
- RF interference
- Path obstruction
- Misaligned antenna
- Faulty antenna
- Improper grounding
- Insufficient link margin in the design/implementation
- Moisture in the transmission system (antenna feed and/or RF cable)

If the radio link has been operating without issues and is exhibiting new poor performance behavior or becomes completely inoperative, the troubleshooting process should pay close attention to any conditions that may have changed between the time when the system was working without issue and the time when the issues started.

Also, it can be helpful to compare some performance parameters of the system before and after the presence of issues. Often the source of the issues can be determined by thoughtful consideration of changes, such as:

- Changes in weather, including high winds
- Changes made to the radio equipment, transmission system, or connected equipment
- New radio systems or electronic equipment the nearby radio or transmission system

- New construction nearby either end of the link, or along the path
- Tree growth, flooded fields, or changes in rivers/lakes along the path

Verify that configurations are set as follows:

- RF matches at each end of the link
- Bandwidth matches at each end of the link
- Link distance matches at each end of the link
- TDD Frame Length matches at each end of the link
- Endpoint Identifier is different at each end of the link (one end Radio A, one end Radio B)
- Ethernet interfaces are enabled, as desired
- AUX Ethernet is set for in-band or out-of-band NMS, as desired
- T1/E1 enabling matches at each end of the link
- Link security key matches at each end of the link

Also, use the ***ExaltCalc*** tool in the design phase to determine the optimum setting for the Bandwidth and TDD Frame Length parameters for the given link distance, and provides guidance to the expected RF link performance, as well as throughput, latency, and number of supported T1/E1 circuits.

Typical Indications of Issues

In many cases, microwave radio users do not notice changes or degradation to the radio system until the radio system fails completely or becomes highly errored or significantly intermittent. However, regular management of the radio system can help indicate changes in performance that have not yet impacted user performance, but may impact performance at a later date if left unchecked or unaddressed. The administrator can use this as an opportunity to be proactive and monitor the radio link performance regularly, watching for unexplained or unexpected changes in performance and trends in performance changes.

Most importantly, monitoring radio system RSL over time indicates the performance of the radio system. Address any long-term drop in RSL and erratic or unsteady RSL. Some RSL changes are expected and weather patterns and the related multipath can cause dramatic RSL changes resulting in system outage. However, that outage should not occur at a significantly greater rate than the designed long-term performance. Consult the path design engineer for more information about link reliability expectations and anticipated RSL deviation.

In addition, regular inspection of the transmission system (RF cables and antennas) and paying close attention to changes along the path, such as construction or tree height, or new microwave radio installations nearby, can be extremely helpful and proactive.

When link performance is very poor, alarms on the radio front panel and within the radio's management system indicates particular failures. Consult this manual for more information on the specific alarms and diagnostics, or contact Exalt Customer Care for assistance.

Exalt Customer Care is primarily motivated to determine if the radio hardware is faulty and require return for repair, and to help execute an effective and efficient repair and return process for radio terminals believed to be faulty. However, Exalt Customer Care provides advice regarding the total radio system and RF path engineering and environment, and advises on troubleshooting.

End users should first contact the installer and/or designer of the system. In many cases, an in-depth understanding of RF design is required, and on-site analysis and special test equipment, may be

necessary. Compared to phone support from Exalt Customer Care, troubleshooting is much more expeditious if the professional installer and/or link designer examines the system and reviews the management information in the GUI. In turn, if the professional installer and/or link designer contacts Exalt Customer Care, the process to rectify the system is much more expedient due to the in-depth knowledge related to the implementation and the RF environment.

Improper RF Cable Termination

Improper RF cable termination is a very common problem. In many cases, this is a problem that occurs during installation and is not a problem that suddenly appears. However, if cables are moved or flexed, especially near the termination points, and radio errors, changes in RSL, or other performance issues occur, this is a certain sign of this issue.

Another relatively easy method to test for this condition is to decrease the output power of the radio system (at each end, one end at a time). A poor RF cable termination may be reflecting too much RF energy back into the radio system, and reducing output power reduces the reflected energy at a faster rate than the transmitted energy towards the far end. Be careful not to reduce the output power to the point where the radio's threshold is reached. Typically, a reduction of just 3 to 6dB is enough to determine if this is the issue. If the reduction of output power clears the error condition, this is the likely cause.

Use a reflectometer or meter that can read VSWR at the operating frequency to identify poor terminations as well as poor antenna feeds.

Note: The Praxsym VSWR meter is an excellent tool for this purpose.

Multipath Propagation

Multipath propagation is a term that encompasses changes to the RF path, such as reflections and/or refraction, causing partial or complete destruction of the radio signal, and thus excessive bit errors and/or system outages.

Rapid changes in temperature, inversion layers, humidity, air pressure, water evaporation, as well as standing water or moisture on objects along the path are all examples of changes that can cause multipath propagation. New building construction near either end of the path or along the path can cause new reflection characteristics.

If your system has been operating without issue and is suddenly experiencing issues that are symptomatic of a certain time of day or related to change in climatic events or some of the external factors listed above, this is likely the cause. Consult a professional RF path engineer in these cases. Often, minor repositioning of the antennas at either or both ends can reduce or eliminate these problems.

RF Interference

RF interference is usually indicative of another radio system nearby either end of your radio system or aimed towards one or both ends of your radio system – usually at or near the same frequency and usually with a similar signal level.

Other forms of RF interference also exist, such as electronic equipment placed close to the radio chassis or transmitters that couple onto the cabling or grounding system of the radio. Microwave ovens and wireless communication devices used near the equipment or cabling are examples of electronic equipment interference.

Note: Exalt Digital Microwave Radios operate in license-exempt bands. Microwave ovens, wireless Internet devices and cordless phone technology may also use this frequency band. It may be necessary to separate the radio chassis, cabling system and antenna from these devices.

RF interference, like most other causes of problems, is indicated by significant bit errors and/or system outages.

One means to determine presence of interference is the use of a spectrum analyzer that covers the same range as the radio system. A professional RF engineer can use a spectrum analyzer to locate sources of interference, measure these sources, and determine potential remedies to take to operate in the presence of interference.

If a spectrum analyzer is not available, the radio's RSL port can help determine RSL levels of interfering signals. By turning the far-end radio off, the residual RSL measured by the radio indicates the level of interference seen by the radio. It is possible that interference levels below that which can be measured still have an impact on the radio system – especially if the radio system has low fade margin or is using a high order modulation.

Exalt Digital Microwave Radios provides considerable flexibility to tune to different frequencies across the bands within which they operate. This is the easiest method to use to try to avoid existing interference. In addition, the occupied bandwidth of the radio can be reduced. This, along with re-tuning, can be very effective, however throughput is reduced.

Repositioning the antenna and/or changing polarization, or upgrading the antenna to a higher gain, and/or using a high-performance antenna, are all secondary means that can be used. It may be necessary to perform combinations of both radio changes (retuning, occupied bandwidth reduction) and antenna system changes (position, polarization, upgrade).

Path Obstruction

A path obstruction is defined as an object, such as a building or tree, impeding the proper path of the radio system. If the system design was proper at the time of installation and issues arise at a later date, an updated path profile and survey may be necessary to identify changes in path clearance.

Misaligned Antenna

At the time of initial installation, it is critical that the antennas at each end are properly aligned and that the designed RSL is achieved. However, antennas may become misaligned due to high winds, changes in the guy-wiring systems keeping the antenna mast stable, or loosening of the antenna mounting hardware. A reduction in the RSL of the link is symptomatic of this condition, but this condition is not the only condition that results in a reduction of RSL. However, if conditions occur where the antenna alignment may be suspected, the mechanics must be inspected and the antennas realigned.

Faulty Antenna (EX-4.5r-c GigE and EX-5r-c GigE)

A faulty antenna is rare, but is still a possibility. In some cases, the mechanics of the antenna feed can get moisture inside, or a bad or weak connection in the pin and connector structure of the antenna may occur. A VSWR measurement of the antenna connection can be made to verify this condition.

Improper Grounding

In addition to being a potential human safety issue, improper system grounding is a somewhat common condition that can cause continuous bit errors or bit errors when metal objects come in

contact with the radio, transmission system, or racking system. If touching the radio causes errors, grounding is the cause. It can be difficult to identify grounding problems, but a professional electrician can normally inspect a system and identify if there are deficiencies in the grounding system.

Insufficient Link Margin

Ideally, the link was designed with enough link margin (fade margin) to allow for multipath propagation and atmospheric fading and still remain reliable. In some cases, link margin is compromised by economic factors, such as using low-cost RF cabling or lower-cost antennas that have less gain or deficient performance compared to higher cost transmission system components. In some cases, there may be antenna size restrictions that forced the design to not have the desired amount of link margin.

If the link was designed with poor link margin, there are likely many cases of bit errors and outages. The antenna system and transmission line can be upgraded to help reduce this. If the link design was installed with sufficient margin, but RSL is reduced, the remaining link margin may no longer be enough to maintain a reliable link. The causes of RSL reduction were previously described, but are usually due to new path obstruction(s) or antenna misalignment due to wind or mechanical factors. The antenna height or location can be changed to overcome new obstructions. Realignment of the antenna, and/or improvement to mechanical structures can help overcome antenna misalignment.

Moisture in the Transmission System

If the connectors on cables and antennas and egress junctions are not properly weatherproofed, moisture can get into the transmission system and cause significant error conditions and erratic performance. In many cases, the transmission system must be replaced. A VSWR meter is one means to identify such issues. Conduct physical inspections often. If changes to the weatherproofing (such as cracking) are noticed, replace the weatherproofing before leakage occurs.

Back-to-back Bench Testing

Use back-to-back bench testing to test the radio before installation, pre-configure the radio and connected equipment before installation, or in the troubleshooting process to identify if the radio hardware is the source of a system issue. It is a critical process, and often required or highly desirable for any installation or troubleshooting exercise. This section describes how to properly configure the radio hardware and accessories for a proper back-to-back bench test.

For radio testing, there are two types of back-to-back configurations:

1 Basic test (test general operation)

2 Specification performance verification

Basic Test

The basic test is a simple test of radio functionality. It verifies that the radios are properly configured to communicate to one another, and verifies general radio performance as operational.

For the basic test, the following items are needed:

- Radio pair
- Powering source
- RF interconnect cable(s) (any length – short is best)
- Fixed or variable attenuation, between 60 and 90dB (note: attenuation for basic test does not to be calibrated or precise)
- Computer/terminal with either serial or Ethernet port (helpful, but not necessary)
  - If no computer is available, use the temporary hardware configuration key or DIP switch, depending on radio model (see Initial Configuration and Back-to-Back Bench Test)

Connect the items as follows:

1 Connect attenuation and (known-good) RF cable(s) between radio pair, shown in Figure 49.

2 Configure one radio as Radio A; the other as Radio B

3 Power on radio pair

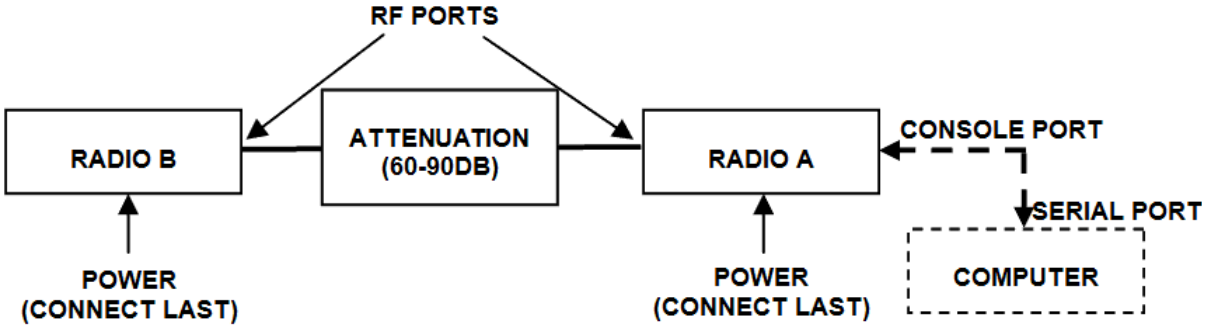

Figure 49 Basic back-to-back bench test configuration

After connecting and powering on, observe the front panel LEDs to verify that the LINK and STATUS LEDs are green. If so, the radios are communicating and all radio-related alarm conditions are normal.

It can be beneficial to have a computer to verify configuration in case of red LEDs or to pre-configure the radio as desired for operation. Follow the instructions in Configuration and Management.

Specification Performance Verification

The specification performance verification is a more detailed test that allows you to verify that the radio's output power and threshold specifications are being met. This is typically a test that would only be performed in a troubleshooting scenario, but can be performed before installation to provide a detailed record or ensure radio performance before installation.

This test is identical to the basic test, but in place of the fixed attenuation, it requires the use of calibrated variable attenuation, or a set of calibrated fixed attenuators, or a combination of both, adding to a total attenuation value of 120dB, as measured at the operating frequency of the radio. In addition, a volt meter or computer is also required.

Connect the system as shown in Figure 49, using the combination of fixed and variable attenuation between the radio's RF ports. Connect the volt meter to either radio's RSL test point and associated reference ground connection.

In this test, it is desirable to use pre-tested RF cables, known to be good, and the insertion loss is known at the operating frequency. If the cables are short (6'/2m or less), you can estimate the loss, including connectors, to be less than 1dB each. The estimate of cable loss is critical to the overall confidence of the measurements made in this test.

There are two critical specifications that can be tested in this configuration:

- RF output power
- Radio receiver threshold

To measure transmitter output power, simply insert any value of attenuation between the radios between 60 and 90dB. Ensure that both RF output power settings are at maximum. Use the volt meter to measure RSL in both directions. The RSL measured value should match the appropriate value according to the inserted attenuation, such as:

RSL = RF Output Power – cabling losses – total attenuation

Verify output power by adjusting output power using the Exalt GUI (in administration mode) and evaluate the corresponding change to the RSL measurement.

For threshold testing, the key is to insert a measured amount of loss that is close to, but not exceeding the radio's specified system gain. System gain is the difference between RF output power and receiver threshold. At your selected modulation and bandwidth settings, determine the specified threshold performance, and choose a value of attenuation (including cable losses) that adds to roughly 5 to 15dB less than the system gain.

For example, if the threshold for your measurement is -85dBm, the output power is +27dBm, so the system gain is 112dB. Choose a value of total attenuation in the range of roughly 100–105dB. Once this attenuation is inserted, verify RSL readings as in the first step, and then, using the GUI, reduce radio output power in 1dB steps until the receiving radio (the one whose output power not being adjusted) Link LED turns from green to yellow. This indicates that threshold has been reached. At this point, verify the equation for system gain using the new output power level setting and verify that the threshold performance is meeting or exceeding the published specification.

Note: Due to the variation of measurements and accuracies involved in this test, you may read a measurement that is 1dB to as much as 2dB off of the expected value. It should be of no concern unless the value is more than 3dB worse than expected.

General Compliance and Safety

The usage of radio transmission devices is subject to specific regulatory requirements governed by regional legislation. In most cases, the specific device must be authorized for use in a given country and must be installed and adjusted in accordance with specific radio-frequency settings and in a manner that has been authorized specific to the device itself in accordance with the specific location of the device. Some users may be completely or partially restricted from use of the device. Please consult local governmental agency/agencies for regulatory requirements before use, or contact Exalt or your Exalt authorized dealer for assistance.

Do not modify this device in any way without the express written consent of Exalt. Modification voids the manufacturer warranty, and may also be illegal in accordance to government regulations. In addition, there are no user-serviceable parts or assemblies inside the product housing. There may also be voltages, signals, and mechanisms within the device that could be harmful to human safety.

The mounting of this device and associated peripherals and connections (inclusive of antenna mast, antenna, cabling, egress, lightning protection devices, grounding, power, and so on) may be subject to regional requirements for health and human safety. A qualified professional installer and an electrician are highly recommended, and may be required by law.

Dynamic Frequency Selection

Dynamic Frequency Selection (DFS) may be required by regional legislation in some frequency bands to avoid causing interference to radar systems. Prior to the start of any transmission, the device equipped with DFS monitors the spectrum and is not permitted to transmit on a part of the spectrum that is already in use for radar transmissions for a period of 30 minutes. During operation of the device, the spectrum is continually monitored by the DFS to detect if radar begins transmission on a frequency that is being used by the device to transmit on. If the DFS software detects radar, the device must move off channel within a specified time period so that the device transmission does not interfere with the radar transmission. The device equipped with DFS is required to stay off that part of the spectrum for a minimum of 30 minutes, after which time the device may then check the spectrum for radar transmissions and begin transmitting if no radar is detected.

Safety Notices

1 Review this entire guide for important installation instructions BEFORE attempting to install this product.

2 This product is intended to be installed, used, and maintained by experienced telecommunications personnel only.

3 Employ a properly licensed or authorized electrician to install or evaluate/certify the installation of all power and grounding related to the use of this equipment and all connected devices.

4 The device(s) shall only be connected to AC power sources provided by the supplier or to DC sources within the device specifications. Use a separate breaker circuit at the power source.

5 Lightning, surge protection devices, and earth grounding are required for most installations to ensure human safety. Consult a qualified electrician.

6 Servicing of this device should be performed by authorized personnel only. Do not disassemble this device. By opening or removing any covers you may expose yourself to hazardous energy parts. Incorrect reassembly of this product can cause a malfunction, and/or electrical shock, when the unit is subsequently used.

7 Do not connect or disconnect the power connection to the device when the power supply is plugged into an AC outlet. To connect, first connect the power connection to the device, and then apply power (or plug in) at the outlet. To disconnect, disengage power at the outlet or unplug, and then disconnect the direct connection to the device.

8 Do not insert any object of any shape or size inside this product at any time, whether powered or not. Objects may contact hazardous energy components that could result in a risk of fire or personal injury.

9 Liquids shall not come in contact with, or enter the inside of the device at any time.

10 Proper ventilation and/or airflow shall be provided surrounding the equipment. Items shall not come in contact with heat-sinking materials. Ensure that ambient operational and storage temperature specifications are maintained at all times.

11 Equipment is suitable for mounting on noncombustible surfaces only.

12 Do not move or alter the marking labels.

13 A CSU or similar isolating device is necessary between the equipment and the public telecommunications network. The equipment has not been evaluated for direct connection to the public telecommunications network.

Regulatory Notices

The following notices apply to the EX-5r GigE and EX-5r-c GigE version radios.

United States Compliance

The EX-r Series GigE product families operate under FCC Rule Part 15.407 as a license-exempt device. They may only be used as a point-to-point transmission device for fixed or temporary-fixed (non-mobile) installations. The devices are subject to the following restrictions:

- Do not use external amplifiers to boost the power or overcome transmission system losses, unless the specific amplifier/cable/antenna combination has expressly been authorized by the FCC. The output power must never exceed +30 dBm.
- Cross-border transmissions are expressly prohibited, except with written permission from both the FCC and the governing body of the neighboring country (Cofetel for Mexico; Industry Canada for Canada).
- Use only parabolic dish antennas or directional flat-panel antennas. No other types of antennas (omni-directional, yagi, and so on) are authorized. Parabolic dishes of either grid or solid type are allowed. Maximum mid-band gain of each type of antenna certified is:
  - Parabolic dish: 37.9 dBi (6'/1.8m diameter)
  - Directional flat panel: 28 dBi (~2'/61cm square)

Note: The 5GHz model is approved under FCC Rule Part 15.407(b)(4)(ii) for antenna gains greater than 10dBi.

The 5GHz model cannot be manufactured, marketed, or sold after March 2, 2018 unless it is re-certified under FCC Rule Part 15.407(b)(4)(i).

Check with Exalt Wireless for status of re-certification.

Federal Communications Commission (FCC), United States

The device is allowed to be used provided it does not cause interference to other devices. It is not guaranteed to provide protection against interference from other electronic and radio devices.

The system has been tested and found to comply with the limits of a class B digital device, pursuant to Part 15 of the FCC Rules. These limits are designed to provide reasonable protection against harmful interference in a residential installation. This equipment generates uses and can radiate radio frequency energy and, if not installed and used in accordance with the instructions, may cause harmful interference to radio communications. However, there is no guarantee that interference will not occur in a particular installation. If this equipment does cause harmful interference to radio or television reception, which can be determined by turning the equipment off and on, the user is encouraged to try to correct the interference by one of more of the following measures:

- Reorient or relocate the receiving antenna.
- Increase the separation between the equipment and receiver.
- Connect the equipment into an outlet on a circuit different from that to which the receiver is connected.

- Consult the dealer or an experienced radio/TV technician for help.

Shielded cables and I/O cords must be used for this equipment to comply with the relevant FCC regulations.

Changes or modifications not expressly approved in writing by Exalt may void the user's authority to operate this equipment.

This device must be professionally installed.

To comply with regulations, the output power of this device may need to be adjusted in accordance to the associated transmission system. See RF Output Power Setting for details.

The antenna associated with this device shall be mounted in a location that is at least 10.5'/3.2m away from humans that may be subject to long-term or continuous exposure.

Canada Compliance

The EX-5r GigE models operate under RSS-210 of Industry Canada regulations. Operation is subject to the following conditions, unless express permission is granted by Industry Canada to operate in a different manner:

- External amplifiers cannot be used to boost the power or to overcome transmission system losses, unless the specific amplifier/cable/antenna combination is expressly authorized by Industry Canada.
- Cross-border transmissions are expressly prohibited, except with written permission from both Industry Canada and the governing body of the neighboring country (FCC for USA)
- Only parabolic dish antennas or directional flat-panel antennas may be used. No other types of antennas (omni-directional, yagi, and so on) are authorized. Parabolic dishes of either grid or solid type are allowed. Maximum gain of each type of antenna allowed is:
  - Parabolic dish: 37.9 dBi (6'/1.8m diameter)
  - Directional flat panel: 28 dBi (~2'/61cm square)

Industry Canada (IC), Canada

This Class B Digital apparatus meets all the requirements of the Canadian Interference-Causing Equipment Regulations.

Cet appareil numerique de la classe B respecte les exigences du Reglement sur le material broilleur du Canada.

This device complies with RSS-210 of Industry Canada. Operation is subject to the following two conditions:

1. this device may not cause interference, and
2. this device must accept any interference, including interference that may cause undesired operation of the device.

Antennas Supported in Canada

The EX-r Series GigE radios are designed to operate with the antennas listed in Table 7, which have a maximum gain of 37.5dBi. Antennas not included in the list or having a gain greater than 37.5dBi are strictly prohibited for use with this device. The required antenna impedance is 50 Ohms.

Europe and ITU Country Compliance

All of these permitted devices must be professionally installed. They can only be used as a point-to-point transmission device for fixed or temporary-fixed (non-mobile) installations.

Note: Do not use external amplifiers to boost the power or overcome transmission system losses, unless the specific amplifier/cable/antenna combination has expressly been authorized by the specific country regulations. The output power must never exceed that specified in Specifications.

The EX-5r GigE product family operates under EN 301 893 and EN 302 502 rules as a license-exempt device.

The EX-5r GigE product family complies with ETS 301 893 for the 5.3 and 5.47 GHz bands for license-exempt use for most countries recognizing ETSI or ITU band assignments. This band is not yet harmonized for all countries recognizing ETSI or ITU band assignments. These bands require Dynamic Frequency Selection (DFS) and Transmitter Power Control (TPC) for radar-detection and avoidance. There is a +30dBm EIRP limit applied to this band. Transmitter power must be adjusted accordingly with respect to the RF cabling losses and antenna gains associated with each terminal.

The EX-5r GigE product family complies with ETS 302 502 for the 5.8 GHz band. This band is not yet harmonized for all countries recognizing ETSI or ITU band assignments. Consult the individual country regulations or your Exalt Wireless representative for details. This band requires DFS and TPC for radar-detection and avoidance. There is a +33dBm EIRP limit for use of the 10 MHz BW setting, and a +36dBm EIRP limit for use of the 20 MHz BW setting. Some countries limit the EIRP to +5dBm for all bandwidths in this band.

All models comply with the requirements for CE Mark (EN 60950-1 and IEC 60950-1) and EMC (EN 301 489-17). No substitutions shall be made, and all wiring and grounding instructions contained in this manual must be followed to ensure safety in accordance to the standards and local rules.

Regulatory Compliance

As of this printing, Exalt Wireless, Inc. has approvals for the products that are covered by this manual, as indicated in Table 8. If your application or country is not listed, check with your Sales Representative for the current status.

Table 8 Product Approvals

Country	EX-5r Series, 5.3 GHz	EX-5r Series, 5.4 GHz	EX-5r Series, 5.8 GHz
Austria	✔	✔	✔
Australia		✔	✔
Belgium		✔	
Canada	✔	✔	✔
Cyprus	✔	✔	
Czech Republic	✔	✔	✔
Denmark	✔	✔	✔
Estonia	✔	✔	
Finland	✔	✔	
France	✔	✔	✔
Germany	✔	✔	✔
Ghana	✔	✔	
Great Britain	✔	✔	✔
Hungary	✔	✔	✔
Iceland	✔	✔	✔
Ireland	✔	✔	✔
Italy	✔	✔	✔
Liechtenstein	✔	✔	✔
Lithuania	✔	✔	✔
Luxembourg	✔	✔	
Malta			
Mexico	✔		✔
Netherlands	✔	✔	✔
Norway	✔	✔	
Philippines	✔		✔
Poland	✔	✔	✔
Portugal	✔	✔	✔

Table 8 Product Approvals (Continued)

Country	**EX-5r Series, 5.3 GHz**	**EX-5r Series, 5.4 GHz**	**EX-5r Series, 5.8 GHz**
Romania	✔	✔	✔
Slovak Republic	✔	✔	✔
Slovenia	✔	✔	
Spain	✔	✔	✔
Sweden	✔	✔	✔
Switzerland	✔	✔	✔
Turkey	✔	✔	✔
United States	✔	✔	✔

Regulatory Domain Keys

Exalt radios are designed to allow the professional installer to select frequency bands, determine signal bandwidths, tune center frequencies, limit output power, and enable or disable DFS options as permitted by regional regulations. For models with the Regulatory Domain Key (RDK) feature, the radios ship with the RDK information empty and the radio cannot be enabled without a valid key. The partner, distributor, or installer is responsible for installing the RDK based on the final installation country of the radio. Exalt issues RDK information to their distributors when ship-to country information is provided. Consult your local Exalt distributor or reseller to obtain the RDK.

Countries are assigned to different regulatory domains based on current regulatory requirements. Each regulatory domain has the parameters set to ensure that when the radio is turned on, the default settings are complaint for local laws.

Caution! It is critical that the RDK be set to the correct default setting so that the local regulations for the installation requirements are met.

Regulatory Domain Keys are assigned by regulatory domain based on the local regulations.

Table 9 Regulatory Domain Keys

Regulatory Domain Key Name	Frequency Band(s)	Countries
053A0	5.3GHz, 5.4GHz, 5.8GHz	USA (prior to July 20, 2007), Canada (prior to May 8, 2008), Singapore, Philippines
053A1	5.3GHz, 5.4GHz, 5.8GHz	USA (after July 20, 2007), Canada (after May 8, 2008)
053A2	5.8GHz	China
053A3	5.3GHz, 5.8GHz	Mexico
053A4	5.3GHz, 5.4GHz, 5.8GHz	EU, Ghana
053A5	5.4GHz, 5.8GHz	Australia
053A6	5.3GHz, 5.4GHz, 5.8GHz	Philippines

EIRP Limits for the United States and Canada

Note: The professional installer is responsible to ensure that RF output power is properly adjusted to not exceed the regulatory limit.

EX-5r Series EIRP for the US and Canada

5250–5350 MHz Band

For all within the 5250–5350 MHz band, the maximum EIRP is 30 dBm. The maximum output of the radio is +13 dBm.

$$P = 30 - G + L$$

where:

P =	Maximum transmitter output power of radio, in dBm.
G =	Specified gain of antenna, in dBi, from 5250 to 5350 MHz.
L =	Total transmission system losses of all elements between the radio's RF connector and the antenna's RF connector (all cables, connectors, lightning suppressors), in dB, as specified or measured between 5250 and 5350 MHz.

5470–5725 MHz Band

For all models within the 5470–5725 MHz band, the maximum EIRP allowed is 30 dBm. The maximum output power of the radio is +13 dBm.

$$P = 30 - G + L$$

where:

P =	Maximum transmitter output power of radio, in dBm.
G =	Specified gain of antenna, in dBi, from 5470 to 5725 MHz.
L =	Total transmission system losses of all elements between the radio's RF connector and the antenna's RF connector (all cables, connectors, lightning suppressors), in dB, as specified or measured between 5470 and 5725 MHz.

5725–5850 MHz Band

For all models within the 5725–5850 MHz band, the maximum EIRP allowed is 61.9 dBm. The maximum output power of the radio is +24 dBm in Mode 1 and +21 dBm in Mode 2.

$$P = 61.9 - G + L$$

where:

P =	Maximum transmitter output power of radio, in dBm.
G =	Specified gain of antenna, in dBi, from 5725 to 5850 MHz.
L =	Total transmission system losses of all elements between the radio's RF connector and the antenna's RF connector (all cables, connectors, lightning suppressors), in dB, as specified or measured between 5725 and 5850 MHz.

EIRP Limits for Australia

Note: The professional installer is responsible to ensure that RF output power is properly adjusted to not exceed the regulatory limit.

EX-5r Series EIRP for Australia

5470–5725 MHz Band

Note: Australian regulations have a no-transmit band from 5600–5650 MHz, adjust the transmitter to avoid this range.

For EX-5r models within the 5470–5725 MHz band, the maximum EIRP allowed is 30 dBm. The maximum output power of the radio is +13 dBm.

$$P = 30 - G + L$$

where:

P =	Maximum transmitter output power of radio, in dBm.
G =	Specified gain of antenna, in dBi, from 5470 to 5725 MHz.
L =	Total transmission system losses of all elements between the radio's RF connector and the antenna's RF connector (all cables, connectors, lightning suppressors), in dB, as specified or measured between 5470 and 5725 MHz.

5725–5850 MHz Band

For the EX-5r models within the 5725–5850 MHz band, the maximum EIRP allowed is 36 dBm. The maximum output power of the radio is +24 dBm in Mode 1 and +21 dBm in Mode 2.

$$P = 36 - G + L$$

where:

P =	Maximum transmitter output power of radio, in dBm.
G =	Specified gain of antenna, in dBi, from 5725 to 5850 MHz.
L =	Total transmission system losses of all elements between the radio's RF connector and the antenna's RF connector (all cables, connectors, lightning suppressors), in dB, as specified or measured between 5725 and 5850 MHz.

EIRP Limits for the European Union and ITU Countries

The countries that are covered by this Regulatory Domain are: Austria, Belgium, Cyprus, Czech Republic, Denmark, Estonia, Finland, France, Germany, Ghana, Great Britain, Greece, Hungary, Iceland, Ireland, Italy, Latvia, Liechtenstein, Lithuania, Luxembourg, Malta, Norway, Poland, Portugal, Slovak Republic, Slovenia, Spain, Sweden, Netherlands, Switzerland, and Turkey.

Note: The professional installer is responsible to ensure that RF output power is properly adjusted to not exceed the regulatory limit.

- Use only parabolic dish antennas or directional flat-panel antennas. No other types of antennas (omni-directional, yagi, and so on) are authorized. Parabolic dishes of either grid or solid type are allowed. Maximum mid-band gain of each type of antenna certified is:
  - Parabolic dish: 37.9 dBi (6'/1.8m diameter)
  - Directional flat panel: 28 dBi (~2'/61cm square)

EX-5r Series EIRP

Table 10 summarizes the maximum power by band and country for EX-5r Series radios.

5250–5350 MHz band

For all models within the 5250–5350 MHz band, the maximum EIRP is specified in Table 10. The maximum output of the radio is +13 dBm.

$$P = ME - G + L$$

where:

P =	Maximum transmitter output power of radio, in dBm.
ME =	Maximum EIRP, as specified in Table 10.
G =	Specified gain of antenna, in dBi, from 5250 to 5350 MHz.
L =	Total transmission system losses of all elements between the radio's RF connector and the antenna's RF connector (all cables, connectors, lightning suppressors), in dB, as specified or measured between 5250 and 5350 MHz.

5470–5725 MHz band

For all models within the 5470–5725 MHz band, the maximum EIRP allowed is specified in Table 10. The maximum output power of the radio is +13 dBm.

$$P = ME - G + L$$

where:

P =	Maximum transmitter output power of radio, in dBm.
ME =	Maximum EIRP, as specified in Table 10.
G =	Specified gain of antenna, in dBi, from 5470 to 5725 MHz.
L =	Total transmission system losses of all elements between the radio's RF connector and the antenna's RF connector (all cables, connectors, lightning suppressors), in dB, as specified or measured between 5470 and 5725 MHz.

5725–5850 MHz band

For all models within the 5725–5850 MHz band, the maximum transmit power with respect to specific country EIRP regulations is determined based on the channel bandwidth. The EIRP power limit is specified in Table 10. The Exalt EX-5r series radios maximum transmitter conducted power is +24 dBm. Use the following equation to determine the maximum transmitter power for the radio:

$$P = ME - G + L$$

where:

P =	Maximum transmitter output power of radio, in dBm.
ME =	Maximum EIRP, as specified in Table 10.
G =	Specified gain of antenna, in dBi, from 5725 to 5850 MHz.
L =	Total transmission system losses of all elements between the radio's RF connector and the antenna's RF connector (all cables, connectors, lightning suppressors), in dB, as specified or measured between 5725 and 5850 MHz.

Table 10 EU and ITU Country Specific EIRP Levels for EX-5r Series

Country	Maximum EIRP 5.3 GHz band	Maximum EIRP 5.4 GHz band	Maximum EIRP 5.8 GHz band (BW dependent)[a]
Austria	23 dBm	30 dBm	5 dBm
Belgium		30 dBm	
Cyprus	23 dBm	30 dBm	
Czech	23 dBm	30 dBm	33/36 dBm
Denmark	23 dBm	30 dBm	33/36 dBm
Estonia	23 dBm	30 dBm	
Finland	23 dBm	30 dBm	
France	23 dBm	30 dBm	33/36 dBm
Germany	23 dBm	30 dBm	33/36 dBm
Ghana	23 dBm	30 dBm	33/36 dBm
Great	23 dBm	30 dBm	33/36 dBm
Hungary	23 dBm	30 dBm	33/36 dBm
Iceland	23 dBm	30 dBm	33/36 dBm
Ireland	23 dBm	30 dBm	33/36 dBm
Italy	23 dBm	30 dBm	33/36 dBm
Liechtens	23 dBm	30 dBm	5 dBm
Lithuania	23 dBm	30 dBm	33/36 dBm
Luxembo	23 dBm	30 dBm	
Netherla	23 dBm	30 dBm	33/36 dBm
Norway	23 dBm	30 dBm	33/36 dBm
Poland	23 dBm	30 dBm	33/36 dBm
Portugal	23 dBm	30 dBm	5 dBm
Romania	23 dBm	30 dBm	33/36 dBm
Slovak	23 dBm	30 dBm	5 dBm
Slovenia	23 dBm	30 dBm	
Spain	23 dBm	30 dBm	33/36 dBm
Sweden	23 dBm	30 dBm	33/36 dBm
Switzerla	23 dBm	30 dBm	5 dBm
Turkey	23 dBm	30 dBm	33/36 dBm

a. If the output power is designated as 33/36 dBm, the EIRP is limited to 33 dBm for 10 MHz bandwidth transmissions and 36 dBm for 20 MHz bandwidth transmissions.

Declaration of Conformity to the R&TTE Directive 1999/ 5/ EC

English:	This equipment is in compliance with the essential requirements and other relevant provisions of Directive 1999/5/EC.
Deutsch:	Dieses Gerät entspricht den grundlegenden Anforderungen und den weiteren entsprecheneden Vorgaben der Richtlinie 1999/5/EU.
Dansk:	Dette udstyr er i overensstemmelse med de væsentlige krav og andre relevante bestemmelser i Directiv 1999/5/EF.
Español:	Este equipo cumple con los requisitos esenciales asi como con otras disposiciones de la Directive 1999/5/EC.
Έλληνας:	Αυτός ο εξοπλισμός είναι σε συμμόρφωση με τις ουσιώδεις απαιτήσεις και άλλες σχετικές διατάξεις της Οδηγίας 1999/5/EC.
Français:	Cet appareil est conforme aux exigencies essentialles et aux autres dispositions pertinantes de la Directive 1999/5/EC.
Íslenska:	Þessi búnaður samrýmist lögboðnum kröfum og öðrum ákvæðum tilskipunar 1999/5/ESB.
Italiano:	Questo apparato é conforme ai requisiti essenziali ed agli altri principi sanciti dalla Direttiva 1999/5/EC.
Nederlands:	Deze apparatuur voldoet aan de belangrijkste eisen en andere voorzieningen van richtlijn 1999/5/EC.
Norsk:	Dette utstyret er i samsvar med de grunnleggende krav og andre relevante bestemmelser i EU-directiv 1999/5/EC.
Português:	Este equipamento satisfaz os requisitos essenciais e outras provisões da Directiva 1999/5/EC.
Suomalainen:	Tämä laite täyttää direktiivin 1999/5/EY oleelliset vaatimukset ja on siinä asetettujen muidenkin ehtojen mukainen.
Svenska:	Denna utrustning är i överensstämmelse med de väsentliga kraven och andra relevanta bestämmelser i Direktiv 1999/5/EC.

For 5 GHz radios, the following standards were applied:

- Radio: EN 301 893, EN 302 502
- EMC: EN 301 489-1, EN 301 489-17
- Safety: EN 60950-1, IEC 60950-1

The following CE mark is affixed to the product:

EU WEEE

Exalt is committed to meeting the requirements of the European Union's Waste Electrical and Electronic Equipment (WEEE) Directive. The Directives require producers of electrical and electronic equipment to finance the take-back for re-use or recycling of their products placed on the EU market after 13 August 2005.

Exalt products that are within the scope of the Directives are labeled with a crossed-out "wheelie-bin" symbol as required by the Directives. This indicates that the product was placed on the market after 13 August 2005 and that end-users should segregate the product from other wastes at end-of-life.

The WEEE Directives are being implemented in each of the 28 EU and European Economic Area (EAA) countries through national legislation. This has resulted in considerable variation in the detailed requirements across the EU, many of which require presence in the EU. As a result, Exalt's WEEE compliance approach is to require the distributors and/or resellers in the EU to comply with each country's national legislation by registration of the distributor or reseller as the producer and for the reseller/distributor to carry out and fulfill the legislative requirements of each national compliance scheme.

Below is the crossed out wheelie bin symbol as required by the WEEE Directive.

EU RoHS

RoHS is the acronym used to refer to the European Union (EU) Directive 2002/95/EC on the Restriction of the use of certain hazardous substances in electrical and electronic equipment. Hazardous materials are those chemicals and substances that are legislatively, market, or customer banned or restricted for use in products and/or manufacturing. There are six (6) RoHS substances: lead (Pb), cadmium (Cd), mercury (Hg), hexavalent chromium (Cr+6), polybrominated biphenyls (PBB) and polybrominated diphenylethers (PBDE). Other countries may be introducing legislation that results in similar restrictions of hazardous substances. Many Exalt products will continue to use lead-based solder under the exemption allowed for network infrastructure equipment. Small amounts of lead, cadmium, mercury, hexavalent chromium, PBB, and PBDE can also be found in a few electrical and electrical components.

Copyright Notices

This section presents copyright notices for third-party software licensed to Exalt Wireless, Inc.

Net-SNMP

The following copyright notice applies to the open-source licensing agreement for Net-SNMP.

Copyright 1989, 1991, 1992 by Carnegie Mellon University

Derivative Work - 1996, 1998-2000

Copyright 1996, 1998-2000 The Regents of the University of California

All Rights Reserved

Permission to use, copy, modify and distribute this software and its documentation for any purpose and without fee is hereby granted, provided that the above copyright notice appears in all copies and that both that copyright notice and this permission notice appear in supporting documentation, and that the name of CMU and The Regents of the University of California not be used in advertising or publicity pertaining to distribution of the software without specific written permission.

CMU AND THE REGENTS OF THE UNIVERSITY OF CALIFORNIA DISCLAIM ALL WARRANTIES WITH REGARD TO THIS SOFTWARE, INCLUDING ALL IMPLIED WARRANTIES OF MERCHANTABILITY AND FITNESS. IN NO EVENT SHALL CMU OR THE REGENTS OF THE UNIVERSITY OF CALIFORNIA BE LIABLE FOR ANY SPECIAL, INDIRECT OR CONSEQUENTIAL DAMAGES OR ANY DAMAGES WHATSOEVER RESULTING FROM THE LOSS OF USE, DATA OR PROFITS, WHETHER IN AN ACTION OF CONTRACT, NEGLIGENCE OR OTHER TORTIOUS ACTION, ARISING OUT OF OR IN CONNECTION WITH THE USE OR PERFORMANCE OF THIS SOFTWARE.

Network Associates Technology, Inc.

Copyright (c) 2001-2003, Networks Associates Technology, Inc

All rights reserved.

Redistribution and use in source and binary forms, with or without modification, are permitted provided that the following conditions are met:

* Redistributions of source code must retain the above copyright notice, this list of conditions and the following disclaimer.

* Redistributions in binary form must reproduce the above copyright notice, this list of conditions and the following disclaimer in the documentation and/or other materials provided with the distribution.

* Neither the name of the Networks Associates Technology, Inc nor the names of its contributors may be used to endorse or promote products derived from this software without specific prior written permission.

THIS SOFTWARE IS PROVIDED BY THE COPYRIGHT HOLDERS AND CONTRIBUTORS "AS IS" AND ANY EXPRESS OR IMPLIED WARRANTIES, INCLUDING, BUT NOT LIMITED TO, THE IMPLIED WARRANTIES OF MERCHANTABILITY AND FITNESS FOR A PARTICULAR PURPOSE ARE DISCLAIMED. IN NO EVENT SHALL THE COPYRIGHT HOLDERS OR CONTRIBUTORS BE LIABLE FOR ANY DIRECT, INDIRECT, INCIDENTAL, SPECIAL,

EXEMPLARY, OR CONSEQUENTIAL DAMAGES (INCLUDING, BUT NOT LIMITED TO, PROCUREMENT OF SUBSTITUTE GOODS OR SERVICES; LOSS OF USE, DATA, OR PROFITS; OR BUSINESS INTERRUPTION) HOWEVER CAUSED AND ON ANY THEORY OF LIABILITY, WHETHER IN CONTRACT, STRICT LIABILITY, OR TORT (INCLUDING NEGLIGENCE OR OTHERWISE) ARISING IN ANY WAY OUT OF THE USE OF THIS SOFTWARE, EVEN IF ADVISED OF THE POSSIBILITY OF SUCH DAMAGE.

Cambridge Broadband, Ltd.

Portions of this code are copyright (c) 2001-2003, Cambridge Broadband Ltd.

All rights reserved.

Redistribution and use in source and binary forms, with or without modification, are permitted provided that the following conditions are met:

* Redistributions of source code must retain the above copyright notice, this list of conditions and the following disclaimer.

* Redistributions in binary form must reproduce the above copyright notice, this list of conditions and the following disclaimer in the documentation and/or other materials provided with the distribution.

* The name of Cambridge Broadband Ltd. may not be used to endorse or promote products derived from this software without specific prior written permission.

THIS SOFTWARE IS PROVIDED BY THE COPYRIGHT HOLDER ``AS IS'' AND ANY EXPRESS OR IMPLIED WARRANTIES, INCLUDING, BUT NOT LIMITED TO, THE IMPLIED WARRANTIES OF MERCHANTABILITY AND FITNESS FOR A PARTICULAR PURPOSE ARE DISCLAIMED. IN NO EVENT SHALL THE COPYRIGHT HOLDER BE LIABLE FOR ANY DIRECT, INDIRECT, INCIDENTAL, SPECIAL, EXEMPLARY, OR CONSEQUENTIAL DAMAGES (INCLUDING, BUT NOT LIMITED TO, PROCUREMENT OF SUBSTITUTE GOODS OR SERVICES; LOSS OF USE, DATA, OR PROFITS; OR BUSINESS INTERRUPTION) HOWEVER CAUSED AND ON ANY THEORY OF LIABILITY, WHETHER IN CONTRACT, STRICT LIABILITY, OR TORT (INCLUDING NEGLIGENCE OR OTHERWISE) ARISING IN ANY WAY OUT OF THE USE OF THIS SOFTWARE, EVEN IF ADVISED OF THE POSSIBILITY OF SUCH DAMAGE.

Sun Microsystems, Inc.

Copyright © 2003 Sun Microsystems, Inc., 4150 Network Circle, Santa Clara,

California 95054, U.S.A. All rights reserved.

Use is subject to license terms below.

This distribution may include materials developed by third parties.

Sun, Sun Microsystems, the Sun logo and Solaris are trademarks or registered trademarks of Sun Microsystems, Inc. in the U.S. and other countries.

Redistribution and use in source and binary forms, with or without modification, are permitted provided that the following conditions are met:

* Redistributions of source code must retain the above copyright notice, this list of conditions and the following disclaimer.

* Redistributions in binary form must reproduce the above copyright notice, this list of conditions and the following disclaimer in the documentation and/or other materials provided with the distribution.

* Neither the name of the Sun Microsystems, Inc. nor the names of its contributors may be used to endorse or promote products derived from this software without specific prior written permission.

THIS SOFTWARE IS PROVIDED BY THE COPYRIGHT HOLDERS AND CONTRIBUTORS "AS IS" AND ANY EXPRESS OR IMPLIED WARRANTIES, INCLUDING, BUT NOT LIMITED TO, THE IMPLIED WARRANTIES OF MERCHANTABILITY AND FITNESS FOR A PARTICULAR PURPOSE ARE DISCLAIMED. IN NO EVENT SHALL THE COPYRIGHT HOLDERS OR CONTRIBUTORS BE LIABLE FOR ANY DIRECT, INDIRECT, INCIDENTAL, SPECIAL, EXEMPLARY, OR CONSEQUENTIAL DAMAGES (INCLUDING, BUT NOT LIMITED TO, PROCUREMENT OF SUBSTITUTE GOODS OR SERVICES; LOSS OF USE, DATA, OR PROFITS; OR BUSINESS INTERRUPTION) HOWEVER CAUSED AND ON ANY THEORY OF LIABILITY, WHETHER IN CONTRACT, STRICT LIABILITY, OR TORT (INCLUDING NEGLIGENCE OR OTHERWISE) ARISING IN ANY WAY OUT OF THE USE OF THIS SOFTWARE, EVEN IF ADVISED OF THE POSSIBILITY OF SUCH DAMAGE.

Sparta, Inc.

Copyright (c) 2003-2005, Sparta, Inc

All rights reserved.

Redistribution and use in source and binary forms, with or without modification, are permitted provided that the following conditions are met:

* Redistributions of source code must retain the above copyright notice, this list of conditions and the following disclaimer.

* Redistributions in binary form must reproduce the above copyright notice, this list of conditions and the following disclaimer in the documentation and/or other materials provided with the distribution.

* Neither the name of Sparta, Inc nor the names of its contributors may be used to endorse or promote products derived from this software without specific prior written permission.

THIS SOFTWARE IS PROVIDED BY THE COPYRIGHT HOLDERS AND CONTRIBUTORS "AS IS" AND ANY EXPRESS OR IMPLIED WARRANTIES, INCLUDING, BUT NOT LIMITED TO, THE IMPLIED WARRANTIES OF MERCHANTABILITY AND FITNESS FOR A PARTICULAR PURPOSE ARE DISCLAIMED. IN NO EVENT SHALL THE COPYRIGHT HOLDERS OR CONTRIBUTORS BE LIABLE FOR ANY DIRECT, INDIRECT, INCIDENTAL, SPECIAL, EXEMPLARY, OR CONSEQUENTIAL DAMAGES (INCLUDING, BUT NOT LIMITED TO, PROCUREMENT OF SUBSTITUTE GOODS OR SERVICES; LOSS OF USE, DATA, OR PROFITS; OR BUSINESS INTERRUPTION) HOWEVER CAUSED AND ON ANY THEORY OF LIABILITY, WHETHER IN CONTRACT, STRICT LIABILITY, OR TORT (INCLUDING NEGLIGENCE OR OTHERWISE) ARISING IN ANY WAY OUT OF THE USE OF THIS SOFTWARE, EVEN IF ADVISED OF THE POSSIBILITY OF SUCH DAMAGE.

Cisco, Inc.

Copyright (c) 2004, Cisco, Inc and Information Network

Center of Beijing University of Posts and Telecommunications.

All rights reserved.

Redistribution and use in source and binary forms, with or without modification, are permitted provided that the following conditions are met:

* Redistributions of source code must retain the above copyright notice, this list of conditions and the following disclaimer.

* Redistributions in binary form must reproduce the above copyright notice, this list of conditions and the following disclaimer in the documentation and/or other materials provided with the distribution.

* Neither the name of Cisco, Inc, Beijing University of Posts and Telecommunications, nor the names of their contributors may be used to endorse or promote products derived from this software without specific prior written permission.

THIS SOFTWARE IS PROVIDED BY THE COPYRIGHT HOLDERS AND CONTRIBUTORS "AS IS" AND ANY EXPRESS OR IMPLIED WARRANTIES, INCLUDING, BUT NOT LIMITED TO, THE IMPLIED WARRANTIES OF MERCHANTABILITY AND FITNESS FOR A PARTICULAR PURPOSE ARE DISCLAIMED. IN NO EVENT SHALL THE COPYRIGHT HOLDERS OR CONTRIBUTORS BE LIABLE FOR ANY DIRECT, INDIRECT, INCIDENTAL, SPECIAL, EXEMPLARY, OR CONSEQUENTIAL DAMAGES (INCLUDING, BUT NOT LIMITED TO, PROCUREMENT OF SUBSTITUTE GOODS OR SERVICES; LOSS OF USE, DATA, OR PROFITS; OR BUSINESS INTERRUPTION) HOWEVER CAUSED AND ON ANY THEORY OF LIABILITY, WHETHER IN CONTRACT, STRICT LIABILITY, OR TORT (INCLUDING NEGLIGENCE OR OTHERWISE) ARISING IN ANY WAY OUT OF THE USE OF THIS SOFTWARE, EVEN IF ADVISED OF THE POSSIBILITY OF SUCH DAMAGE.

Fabasoft R&D Software GmbH & Co.

Copyright (c) Fabasoft R&D Software GmbH & Co KG, 2003

oss@fabasoft.com

Author: Bernhard Penz

Redistribution and use in source and binary forms, with or without modification, are permitted provided that the following conditions are met:

* Redistributions of source code must retain the above copyright notice, this list of conditions and the following disclaimer.

* Redistributions in binary form must reproduce the above copyright notice, this list of conditions and the following disclaimer in the documentation and/or other materials provided with the distribution.

END USER AGREEMENT

(including Limited Hardware Warranty, Software License and RMA Procedure)

THIS IS AN AGREEMENT BETWEEN YOU (AS ORIGINAL END USER PURCHASER OF AN EXALT PRODUCT) AND EXALT WIRELESS, INC. ("EXALT"). THE END USER AGREEMENT APPLICABLE TO YOUR EXALT PRODUCT IS THE END USER AGREEMENT THAT IS PRE-LOADED ON THE EXALT PRODUCT, OR IF NONE IS PRE-LOADED, IT IS THE END USER AGREEMENT AVAILABLE ON THE EXALT WEBSITE @ WWW.EXALTCOM.COM/EULA ON THE DATE OF YOUR PURCHASE OF THE EXALT PRODUCT OR OTHERWISE DIRECTLY AVAILABLE FROM EXALT UPON REQUEST. BY ACCEPTING THIS AGREEMENT OR BY USING THE EXALT PRODUCT WITH OR FOR WHICH THIS AGREEMENT IS PROVIDED ("PRODUCT"), YOU ARE AGREEING TO ALL OF THE BELOW TERMS AND CONDITIONS. IF YOU DO NOT AGREE WITH THESE TERMS AND CONDITIONS, YOU SHOULD NOT USE THE PRODUCT AND PROMPTLY RETURN IT TO YOUR PLACE OF PURCHASE FOR A REFUND. "YOU" MEANS THE LEGAL END USER ENTITY THAT PURCHASED THE PRODUCT FOR ITS OWN USE.

1 Exalt Limited Hardware Warranty

a. Exalt warrants solely to the original purchaser ("Purchaser") that the Exalt hardware product that this Agreement is provided with or for (the "Hardware Product") will substantially conform in all material respects to the relevant Exalt published specifications that apply at the time of manufacture of such Hardware Product for two (2) years from the date of purchase of Hardware Product by Purchaser (the "Warranty Period"). Proof-of-purchase in the form of an invoice, payment of invoice, or delivery waybill must be supplied, if requested by Exalt, in case of any dispute of warranty start date.

b. In the event Purchaser notifies Exalt during the Warranty Period of a defective Hardware Product (material nonconformance with the published specifications), Exalt shall within the Warranty Period, at its own option either: (A) use reasonable efforts to remedy any reproducible Hardware Product defect covered by this limited warranty within a reasonable period of time; (B) replace the defective Hardware Product with a functionally equivalent product (repair parts and products may be either reconditioned or new, but, if reconditioned, shall be of the same quality as new parts or products); or (C) if Exalt determines that it is unable to repair or replace such Hardware Product, Exalt (or its applicable reseller) will refund to Purchaser the amount actually paid by Purchaser for the applicable Hardware Product. All replaced parts and products become the property of Exalt.

c. The Exalt warranty does not cover any defective Hardware Product that (i) is subject to the exclusions set forth below in Section 3; (ii) cannot be demonstrated to have a defect of the types of defects covered by the Exalt warranty, or (iii) Purchaser is unable to provide adequate information describing how the Hardware Product failed that would allow Exalt to determine that the defect is covered by the Exalt warranty. Any Hardware Product that is returned by the Purchaser to Exalt and Exalt determines that such product is not covered by the Exalt warranty, will be, at Purchaser's option and expense (including any applicable shipping, handling, evaluation, repair, replacement and disposal fees), either be: (a) returned to Purchaser in the state received, (b) repaired or replaced, as applicable, and returned to Purchaser, or disposed of in accordance with Purchaser's instructions. Repaired or replaced Hardware Product will be warranted for the remainder of the original Warranty Period, but not less than ninety (90) days.

2 Warranty Registration

In order to facilitate warranty service and communication with Exalt, Exalt recommends that the Purchaser registers the Hardware Product with Exalt promptly following the Hardware Product purchase by providing to Exalt the requested registration information. *Product registration may be performed by completing and submitting the product registration form on www.exaltcom.com/ProductRegistration.*

3 Limited Hardware Warranty Exclusions

This limited warranty will not apply to: (A) any Hardware Product that: (i) has been modified or altered by any party other than Exalt; (ii) has been subject to accident, misuse, neglect, or mistreatment; (iii) has been damaged during installation of the Hardware Product; (iv) has been damaged by failure of Purchaser or its agents to follow Exalt's instructions or specifications; (v) has been damaged by the equipment or system with which the Hardware Product is used; (vi) has sustained damage to the Hardware Products' interface or power connectors; (vii) is determined to be stolen; or (viii) has been damaged by water, fire, power changes, other hazards, or acts of God (including without limitation lightning); (B) any Software included in any such Hardware Product (see Software License below), or (C) any consumables. The warranty applies only to Hardware Products manufactured by or for Exalt and that can be identified by the Exalt trademark, trade name, serial number or logo affixed to them. Other products, including any third-party manufacturer products sold by Exalt on a resale basis, are subject to the applicable third-party manufacturer's warranty and end user agreement and are not warranted by Exalt. The Hardware Products covered by this warranty are not consumer products and are not intended for personal, family, or household purposes, nor are they intended for high-risk activities as described in Section 5 below.

4 Hardware Product RMA Procedure

A return material authorization (RMA) is required prior to returning Hardware Product to Exalt for in-warranty or out-of-warranty repair/evaluation. As such, Purchaser must use the then current Exalt RMA procedure. Such procedure is available on the Exalt website @ www.exaltcom.com/RMA or directly from Exalt upon request.

PRODUCTS RETURNED WITHOUT A DULY ISSUED RMA NUMBER WILL BE RETURNED TO PURCHASER BY EXALT AT PURCHASER'S EXPENSE.

5 PRODUCT WARRANTY DISCLAIMER AND LIMITATION OF LIABILITY

a. THE ABOVE EXPRESS LIMITED WARRANTY FOR THE HARDWARE PRODUCT, THE CONDITIONS AND OTHER TERMS SET FORTH IN THIS AGREEMENT ARE IN LIEU OF ALL OTHER WARRANTIES, CONDITIONS AND OTHER TERMS WHETHER EXPRESS, IMPLIED OR STATUTORY, REGARDING THE PRODUCT (HARDWARE PRODUCT AND SOFTWARE) AND ANY SERVICES PROVIDED BY EXALT, AND EXALT, ITS SUPPLIERS AND LICENSORS HEREBY EXPRESSLY DISCLAIM, TO THE EXTENT ALLOWED BY APPLICABLE LAW, ANY AND ALL SUCH EXPRESS, IMPLIED AND STATUTORY WARRANTIES, CONDITIONS AND OTHER TERMS, INCLUDING WITHOUT LIMITATION ANY AND ALL IMPLIED WARRANTIES OF FITNESS FOR A PARTICULAR PURPOSE, TITLE, INTERFERENCE WITH QUIET ENJOYMENT, NON-INFRINGEMENT OF THIRD-PARTY RIGHTS AND MERCHANTABILITY. FURTHER, EXALT DOES NOT WARRANT RESULTS OF USE OR THAT YOUR USE OF THE PRODUCT WILL BE UNINTERRUPTED OR ERROR FREE. NO WARRANTIES ARE MADE BY EXALT'S SUPPLIERS OR LICENSORS. EXCEPT FOR THE ABOVE EXPRESS LIMITED WARRANTY FOR THE HARDWARE PRODUCT, THE CONDITIONS AND OTHER TERMS STATED HEREIN, THE

PRODUCT IS PROVIDED "AS IS" AND WITH ALL FAULTS. THE ENTIRE RISK AS TO SATISFACTORY QUALITY, ACCURACY, AND EFFORT IS WITH YOU.

b. THE PRODUCT IS NOT FAULT-TOLERANT AND IS NOT DESIGNED, MANUFACTURED OR INTENDED FOR USE OR RESALE AS ONLINE CONTROL EQUIPMENT IN HAZARDOUS ENVIRONMENTS REQUIRING FAIL-SAFE PERFORMANCE, SUCH AS IN THE OPERATION OF NUCLEAR FACILITIES, AIRCRAFT NAVIGATION OR COMMUNICATION SYSTEMS, AIR TRAFFIC CONTROL, DIRECT LIFE SUPPORT MACHINES OR WEAPONS SYSTEMS, IN WHICH THE FAILURE OF THE PRODUCT COULD LEAD DIRECTLY TO DEATH, PERSONAL INJURY, OR SEVERE PHYSICAL OR ENVIRONMENTAL DAMAGE. EXALT AND ITS SUPPLIERS AND LICENSORS SPECIFICALLY DISCLAIM ANY EXPRESS OR IMPLIED WARRANTY OF FITNESS FOR ANY HIGH-RISK USES LISTED ABOVE.

c. REGARDLESS OF WHETHER ANY REMEDY SET FORTH HEREIN FAILS OF ITS ESSENTIAL PURPOSE OR OTHERWISE, AND TO THE EXTENT ALLOWED BY APPLICABLE LAW, IN NO EVENT WILL EXALT, ITS SUPPLIERS OR LICENSORS BE LIABLE TO YOU OR TO ANY THIRD PARTY UNDER ANY TORT, CONTRACT, NEGLIGENCE, STRICT LIABILITY OR OTHER LEGAL OR EQUITABLE THEORY FOR ANY LOST PROFITS, LOST OR CORRUPTED DATA, COMPUTER FAILURE OR MALFUNCTION, INTERRUPTION OF BUSINESS, OR OTHER SPECIAL, INDIRECT, INCIDENTAL OR CONSEQUENTIAL DAMAGES OF ANY KIND ARISING OUT OF (1) THE USE OR INABILITY TO USE THE PRODUCT OR (2) PRODUCT RELATED SERVICE OR SUPPORT, EVEN IF EXALT HAS BEEN ADVISED OF THE POSSIBILITY OF SUCH LOSS OR DAMAGES AND WHETHER OR NOT SUCH LOSS OR DAMAGES ARE FORESEEABLE.

d. IN NO EVENT SHALL EXALT'S AND ITS SUPPLIERS'/LICENSORS' AGGREGATE LIABILITY EXCEED AN AMOUNT EQUAL TO THE PURCHASE PRICE PAID BY PURCHASER FOR THE PRODUCT OR SERVICE THAT IS THE SUBJECT OF A CLAIM. ANY CLAIM ARISING OUT OF OR RELATING TO THIS AGREEMENT MUST BE BROUGHT WITHIN ONE (1) YEAR AFTER THE OCCURRENCE OF THE EVENT GIVING RISE TO SUCH CLAIM. IN ADDITION, EXALT DISCLAIMS ALL LIABILITY OF ANY KIND OF EXALT'S SUPPLIERS/LICENSORS.

6 SOFTWARE LICENSE

a. Subject to the terms and conditions of this Agreement, Exalt hereby grants You a non-exclusive, non-transferable, non-sublicensable license to use the Software that comes with the Product, if any is provided as part of the Product, only as part of the normal operation, use and maintenance of the Hardware Product for which the Software was provided. You may make back-up copies of such Software. You shall not otherwise copy, distribute or alter the Software. Furthermore, except to the extent allowed by applicable law if located in the European Union, and then only with prior written notice to Exalt, You shall not disassemble or reverse engineer the Software in whole or in part or authorize others to do so. No rights to distribute or sublicense the Software are granted herein.

b. There may be certain third-party owned software provided along with, or incorporated within the Product ("Third Party Software"), and which Third Party Software has a separate license agreement and which is governed exclusively by such separate license agreement ("Third Party License") and not this Agreement. Such Third Party Software and applicable Third Party Licenses are listed in the document "EXALT WIRELESS, INC. THIRD-PARTY SOFTWARE AND THIRD-PARTY LICENSES USED WITH CERTAIN EXALT

PRODUCTS" available through the Web user interface application provided with this product or on the Exalt website. Except as Exalt may otherwise inform You in writing, the Third Party License gives You at least the license rights granted above in Section 6(a), and may provide additional license rights as to the Third-Party Software, but only with respect to the particular Third-Party Software to which the Third-Party License applies. SUCH THIRD-PARTY SOFTWARE IS PROVIDED WITHOUT ANY WARRANTY FROM EXALT AND ITS LICENSORS, INCLUDING BUT NOT LIMITED TO WARRANTIES OF MERCHANTABILITY, FITNESS FOR A PARTICULAR PURPOSE AND NON-INFRINGEMENT.

c. Exalt and its licensors are the sole and exclusive owners of the Software, and all underlying intellectual property rights in the Software and Hardware Product. All rights not expressly granted to You relating to the Software are reserved by Exalt and its licensors. You take unencumbered title to the Hardware Product, subject to Exalt's and its licensors' ownership in the underlying intellectual property, upon payment in full to Exalt or the Exalt reseller for the Product(s).

d. All licenses to the Software hereunder shall terminate if You fail to comply with any of the provisions of this Agreement and do not remedy such breach within thirty (30) days after receiving written notice from Exalt. You agree upon termination to immediately cease using the Software and to destroy all copies of the Software which may have been provided or created hereunder.

7 GOVERNMENT RESTRICTIONS

a. You agree that you will not export or re-export the Products without Exalt's prior written consent, and then only in compliance with all requirements of applicable law, including but not limited to U.S. export control regulations. You have the responsibility to obtain any required licenses to export, re-export or import the Products. You shall defend, indemnify and hold Exalt and its suppliers/licensors harmless from any claims arising out of Your violation of any export control laws relating to any exporting of the Products. By accepting this Agreement and receiving the Products, You confirm that You are not listed on any governmental export exclusion lists and will not export or re-export the Products to any country embargoed by the U.S. Applicable export restrictions and exclusions are available at the official web site of the U.S. Department of Commerce Bureau of Industry and Security (www.bis.doc.gov).

b. For purchase by or on behalf of governmental entities (including federal, state or provincial, and local), the governmental entity's rights in any technical data and software in the Products include only those rights customarily provided to the public as defined in Exalt's standard End User Agreement. In connection with any purchase by or on behalf of a U.S. governmental entity, Exalt's customary commercial license in technical data and software is provided in accordance with FAR 12.211 (Technical Data) and FAR 12.212 (Software) and, for Department of Defense transactions, DFAR 252.227-7015 (Technical Data - Commercial Items) and DFAR 227.7202-3 (Rights in Commercial Computer Software or Computer Software Documentation). If a governmental entity has a need for rights not conveyed under these terms, it must negotiate a mutually acceptable written agreement with Exalt specifying and specifically conveying such rights. Any use, modification, reproduction, release, performing, displaying or disclosing of the Exalt Software by a governmental entity shall be governed solely by the terms of this Agreement.

8 CONFIDENTIALITY

Purchaser acknowledges and agrees that information supplied by Exalt in connection with the Product or this Agreement and designated by Exalt as confidential is the confidential information of Exalt, which confidential information includes the Software. Purchaser agrees: (i) to hold the confidential information in confidence using the same degree of care that it uses to protect its own

confidential information of similar importance, but not less than a reasonable degree of care, (ii) not to make use of confidential information other than as contemplated by this Agreement, and (iii) not to reproduce confidential information except as expressly authorized by this Agreement. Purchaser's obligations with respect to confidentiality do not apply to information which: (i) becomes generally available to the public other than as a result of unauthorized disclosure by Purchaser, or (ii) was in Purchaser's possession prior to disclosure by Exalt.

9 MISCELLANEOUS

Exalt shall be excused from delay or failure in performance caused by anything beyond its reasonable control, including, without limitation, acts of God or of any third party, government action, compliance with laws or regulations, shortages, strikes, lockouts or industrial disputes, or the unavailability of deliveries, supplies, or software. Purchaser shall not sell, transfer or assign this Agreement without the prior written consent of Exalt. Any act in derogation of the foregoing shall be null and void, and Purchaser will remain obligated under this Agreement. This Agreement shall benefit and be binding upon the parties to this Agreement and their respective permitted successors and assigns. The waiver or failure of either party to exercise in any respect any right provided for in this Agreement shall not be deemed a waiver of any further right under this Agreement. If any provision of this Agreement is held by a court of competent jurisdiction to be contrary to law, the remaining provisions of this Agreement will remain in full force and effect. This Agreement and any disputes arising out of, or in any way related to or connected with, this Agreement, its termination or the relationship of the parties will be governed by and construed in accordance with the laws of the State of California, excluding its conflict of laws principles and excluding the United Nations Convention on Contracts for the International Sale of Goods. All disputes arising out of, or in any way related to or connected with, with this Agreement, the Products or Services shall be administered by the American Arbitration Association under its commercial arbitration rules by a single arbitrator appointed in accordance with the rules. Both parties consent that the arbitration shall take place in Santa Clara County, California. The award rendered by the arbitrator shall be final and binding on the parties and judgment on the award may be entered in any court having jurisdiction thereof. Any litigation relating to this Agreement or the arbitration shall take place in the state courts of Santa Clara County or in the federal courts of the Northern District of California. The foregoing notwithstanding, Exalt may obtain preliminary and/or permanent injunctive relief in any court of competent jurisdiction worldwide to enforce the terms of Sections 6, 7 and 8. Purchaser hereby consents and submits to the exclusive jurisdiction and venue of these courts and agrees that process may be served in the manner provided or allowed by California or federal law. In any action or proceeding to enforce rights under this Agreement, the prevailing party shall be entitled to recover costs and attorneys' fees. If the party who initiates the proceeding unilaterally dismisses it, the other party will be deemed the prevailing party. This Agreement represents the complete agreement and understanding of the parties with respect to the subject matter herein. This Agreement may be modified only through a written instrument signed or otherwise agreed to by both parties.

Part Number 203985

Revision 2.21, 11/6/2014

Exalt Confidential

Index

A
AC adapter 25
Administration Settings page 40
administrator privileges 34
Advance Encryption Standard 41
AES 41
AIS enabling//disabling 57
alarm conditions 37
alarms 54, 61
    clearing 65
Alarms page 61
AMI 57
antenna port parameter 52
antennas
    alignment 31, 87
    Canada 95
    mounting 3, 28
        indoor 30
    mounting height 6
    site preparation considerations 6
    transmission line 29
    troubleshooting 87
AUTO SYNC mode 12
B
B8ZS 57
back-to-back bench test 8, 89
back-to-back bench test configuration 89
bandwidth 5
Bandwidth parameter 50
battery source 25
BER 66
browsers 33
buzzer timeout selection parameter 53
C
cables
    Ethernet (CAT5e or CAT6) 8
    RF 6
    RFC 4
    T1/E1 8
    troubleshooting
        improper RF cable termination 86
center frequency tuning 5
channel bandwidth 5
CLI 32
    main menu 32
    menu options 33
clock 15
configuration file 45
connectors 23
    GPS/RSL 23
    Power/Ethernet 23, 81
    T1/E1 1&3 23
    T1/E1 2&4 23
    TDM 79
contact information 1
Current BER field 63
Current RSL field 64
D
data communication interface 5
date and time 40
DC power source 25
Diagnostic Charts page 66
dimensions 72
documentation, related 1
duplex settings 54
Dynamic Frequency Selection (DFS) 51, 92
E
E1 channels 58
E1 Interface Configuration page 58
effective isotropic radiated power (EIRP) 9
encryption 5
Endpoint Identifier 35, 49
Errored Seconds (ES) field 63
Ethernet configuration parameters 58
Ethernet connectors 81
Ethernet interface 78
    throughput settings 57
Ethernet Interface Configuration page 54
Event Log page 65
ExaltCalc tool 10, 85
external GPS source 14
external loopback modes 59
F
factory default settings 27, 46
fade margin 6, 88
features 5
File Activation page 45, 48
File Transfer page 45
file transfers 45
files
    activating stored 48
    default configuration file 46

frame length *See TDD frame*
frequency
    center 6
G
gateway (default) 46
Global Positioning System (GPS) kit 12
GPS Information page 60
GPS synchronization 52, 60
GPS/RSL connector 23
GPS/RSL LED 24
grounding 87
GUI
    Administration Settings page 40
    Alarms page 61
    browsers supported 33
    description 33
    Diagnostic Charts page 66
    E1 Interface Configuration page 58
    Ethernet Interface Configuration page 54
    Event Log page 65
    File Activation page 45, 48
    File Transfer page 45
    GPS Information page 60
    IP address (default) 33
    log in 34
    login privileges 34
    navigation panel 37
    Performance page 63
    Radio A configuration 33
    Radio Information page 39
    Reboot page 70
    Spectrum Analyzer page 68
    summary status information 37
    System Configuration page 49
    T1 Interface Configuration page 57
    T1/E1 Configuration page 57
    VLAN page 55
H
hop 7
hub 13
I
interfaces
    Ethernet 78
    power 78
    RF 78
    T1/E1 78
interference 64
interference profile 6
IP address conflicts 33
IP address subnet 33
IP settings 8
K
keys
    Regulatory Domain Key (RDK) 41, 49
L
LEDs
    GPS/RSL 24
    Power Injector 24
    Power/Ethernet 24
    T1/E1 1&3 24
    T1/E1 2&4 24
License Key 41
lightning arrestor 6
lightning arrestors 30
Line Build Out (LBO) 57
Line Code 57
link 6
    orientation 10
    RF link testing 8
    synchronization 10
Link Distance parameter 51
link margin 88
link parameters 36
Link Security Key 40
Link Security Key parameter 46
login names 34
login privileges 34
loopback 57, 58, 59
    external (local) 59
    external (remote) 59
    internal 59
M
master timing 12
Maximum RSL field 64
MIB files 45
Minimum RSL field 64
Minimum RSL Timestamp field 64
Mode parameter 50
modes
    AUTO SYNC 12
mounting
    hardware 21
multi-link backbone 13
multi-link network 14

multipath 85
multipath propagation 86
muting 54
N
noise profile 6
O
offset timing 15
P
parameters
    antenna port 52
    buzzer timeout selection 53
passwords 8, 34
path obstruction 87
performance degradation 85
Performance page 63
power
    system LEDs 26
Power connector 81
power injector 25
power interface 78
Power/Ethernet connector 23
R
radio
    default settings 11
    grounding 87
    initiation tasks 19
    installation tasks 19
    maximum transmit power setting 50
    mounting 6, 21
    rebooting 65, 70
Radio A 11
Radio A configuration 7
radio configuration 7
radio features 5
radio firmware files 45
radio frequency 2
Radio Information page 39
radio mount
    enclosure 3
        connections 4
    indoor 3
        connections 4
Radio Transmit Power parameter 49
Reboot page 70
record keeping 20
Regulatory Domain Database (RDD) 45
Regulatory Domain Key (RDK) 41, 49, 99
regulatory requirements
    EX-5i FCC EIRP 101
    EX-5r Series FCC EIRP 100
    USA 94
repeater 13
RESET button 24
RF cable length 4
RF connector termination 25
RF Frequency parameter 50
RF interface 78
RF interference 86
RF lightning arrestor 30
RF output power 9
RSL 9
    current RSL readings 64
    diagnostics 66
    Maximum RSL field 64
    Minimum RSL Timestamp field 64
    monitor for performance 85
RSL voltage 31
S
safety 91
Set to E1 button 57
Set to T1 button 57
shipping box contents 7
site preparation 6
SNMP 17, 42
SNMP Traps 43
specifications 72
Spectrum Analyzer page 68
Swap button 45, 48
SYNC RECIPIENT radio 12
SYNC SOURCE radios 12
synchronization 12
    internal 13
System Configuration page 49
system latency 6
system parameters
    default settings 27
system performance 63
system reboot 65
system settings
    Current BER field 63, 64
    Errored Seconds (ES) field 63
    grounding 87
    Maximum RSL 64
    Minimum RSL field 64

Time Since Reset field 64
Unavailable Seconds field 64
system specifications 73
system synchronization 14
T
T1 clocking 24
T1 Interface Configuration page 57
T1/E1 1&3 connector 23
T1/E1 2&4 connector 23
T1/E1 2&4 LED 24
T1/E1 circuits 57
T1/E1 Configuration page 57
T1/E1 interfaces 78
T1/E1 loopback 59
TDD factors 9
TDD frame length 6
TDD Frame Size parameter 51
TDM circuits 50
TDM connections 79
TDM connectors 79
Telnet session 32
temperature 66
testing 89
back-to-back bench 8
threshold 90
threshold testing 90
time division duplex (TDD) *SeeTDD frame*
Time Since Reset 64
timing
lost signal 15
master timing 12
offset timing 15
using an external GPS source 14
transmission line
coaxial 29
transmitter
output power 8
traps 43
troubleshooting 66, 84
U
Unavailable Seconds (UAS) 64
unfaded error-free performance 9
Update button 40
user privileges 34
V
VLAN 16
tagging 16
VLAN page 55
voltage test 31
VSWR 86

201872-003
2015-10-23

Figure 1 Exalt EX-5r GigE (integrated antenna model) 2
Figure 2 Cabling—integrated antenna model 4
Figure 3 Cabling—external antenna model 4
Figure 4 Basic radio interconnectivity using internal synchronization 13
Figure 5 Collocated radios, one in AUTO SYNC mode to provide redundancy 13
Figure 6 Multiple-link site configuration, using AUTO SYNC for redundancy 13
Figure 7 GPS as primary sync source using AUTO SYNC 14
Figure 8 Synchronized GPS sources using AUTO SYNC 15
Figure 9 Radio installation tasks 19
Figure 10 Pole-mount example 21
Figure 11 EX-r Series GigE pole and wall mount (with azimuth and elevation adjustment) 22
Figure 12 EX-5r-c GigE pole/wall mount 22
Figure 13 EX-r Series GigE connectors 23
Figure 14 Power injector connectors 26
Figure 15 CLI main menu 32
Figure 16 Initiating the browser connection 34
Figure 17 Browser Login screen 34
Figure 18 Radio Information page 35
Figure 19 Exalt GUI window description 36
Figure 20 Summary status information 37
Figure 21 Radio Information page 39
Figure 22 Administration Settings page 40
Figure 23 SNMP Configuration page 42
Figure 24 Trap Configuration page 43
Figure 25 File Transfer page 45
Figure 26 File Transfer page—download file link 46
Figure 27 File Activation page 48
Figure 28 System Configuration page 49
Figure 29 Ethernet Interface Configuration page 54
Figure 30 VLAN Configuration page 55
Figure 31 T1 Interface Configuration page 58
Figure 32 E1 Interface Configuration page 58
Figure 33 External (remote) loopback 59
Figure 34 External (local) loopback 59
Figure 35 Internal loopback 59
Figure 36 GPS Information page 60
Figure 37 Alarms page 61
Figure 38 Performance page 63
Figure 39 Event Log page 65
Figure 40 Diagnostic Charts page 66
Figure 41 Spectrum Analyzer page 68
Figure 42 Spectrum analyzer graph example 69
Figure 43 Reboot page 70
Figure 44 Manual page 71
Figure 45 EX-r Series GigE connector orientation 79
Figure 46 TDM connectors 79
Figure 47 RSL & Sync In connector 80
Figure 48 Power/Ethernet connector 81
Figure 49 Basic back-to-back bench test configuration 89

Factory default settings 11
Connectors 23
LED indicators 24
Recommended transmission line 29
Default login information 34
Alarm status indicators 61
Supported antennas 82
Product Approvals 97
Regulatory Domain Keys 99
EU and ITU Country Specific EIRP Levels for EX-5r Series 104