H818 2.4G Wireless gaming headset

Operation Instruction

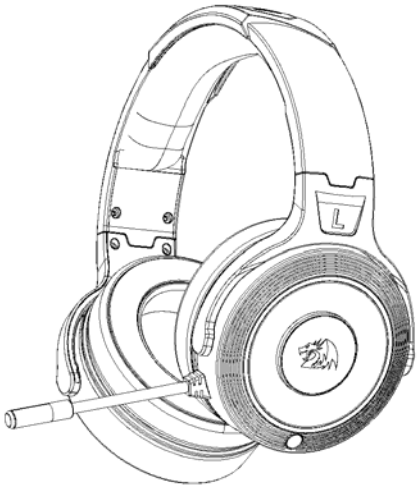

1. **Contents in package**

A, Pelops Headset ----------1PCS

Transmitter ----------1PCS

C, TYPE-C USB-USB cable ----------1PCS

D、3.5(4P)-3.5(4P) Audio cable ----------1PCS

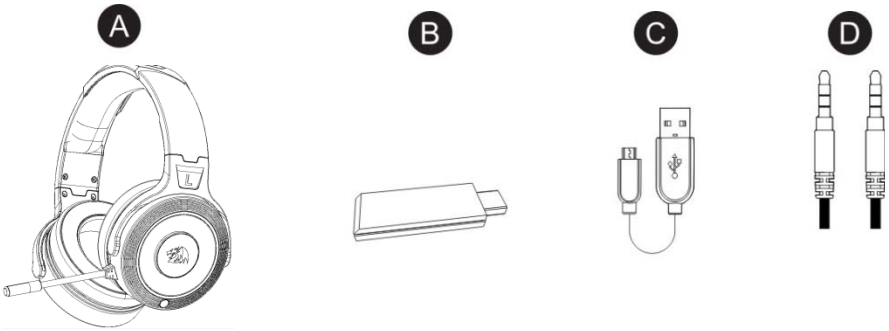

2. Headset and transmitter instruction

Transmitter buttons and indicators

① Working indicator

② Mute indicator

③ USB plug

Remark:

Red/Blue LED flashes :Disconnecting；

Blue LED ON：Connected, Microphone is ready；

Red LED ON: Microphone mute；
Red LED flashes: Headset out of power

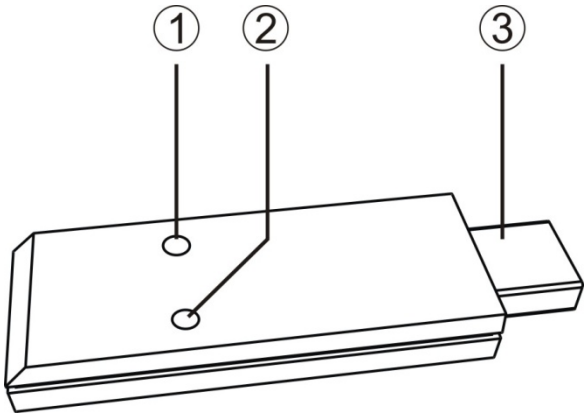

Pelops headset button instructions

1、Volume +
2、Volume -
3、Stereo, Virtual 7.1 mode switch button
4、Press and hold for 3 seconds to pair/ press and hold for 1 second to microphone mute or ON switch
5、AUX 3.5mm headset port
6、Charge indicator /working indicator
7、Type-C charging port
8、Power button (Turn OFF when headset in wired connecting)

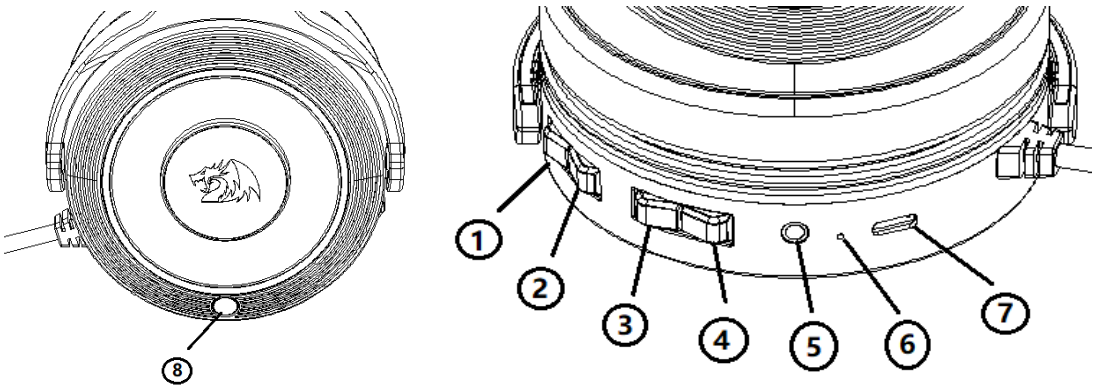

3. How to charge

Please plug C Type- C USB-USB Cable to charging port on headset，then the plug another port of cable into USB port(DC 5V) for charging，the indicator at charging port will be light ON in red, the charging time will be 5 hours.

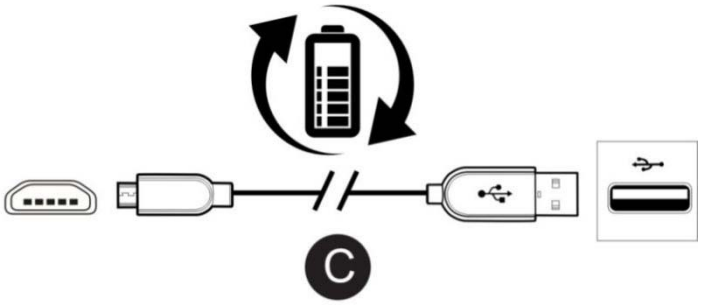

4. How to pair：

1）Turn off the headset and transmitter.

2）Turn on headset, flashes indicator light ON .

3）Press and hold headset pairing button for 3 seconds, flash indicator light ON.

4）Turn on transmitter(plug the transmitter into PC ,PS4)

5）Headset and transmitter pairing automatically, indicators light On in blue.

5.Headset operation：

1）Connect transmitter to PC/PS4 , indicator light ON and flashes.

2）Turn on headset, it will pair to transmitter automatically, indicators on headset and transmitter lighting steady ON while pairing successful, the indicators flash when failed to pairing.

3）Press Volume+/- for adjustment.

4）Microphone default ON. To turn off microphone, press pairing/mute button (indicator light on in Red), then press it again (Indicator light on in blue).

5）Headset is default in stereo sound, press button 3 to switch virtual 7.1sound, headset has tone of “di “ one time for indication ,press it again to switch back stereo sound, headset has tone of”di”twice for indication.

6）Low power indicator flash light ON in red when headset power down to 3.5V, headset and transmitter send alarm , headset indicator flash in blue, transmitter indicator flash in red, please charge in time.

6. Connecting to PS4 ：

(PS4)

1）Plug transmitter type C into PS4 , and fix it tight to avoid connecting port lose.

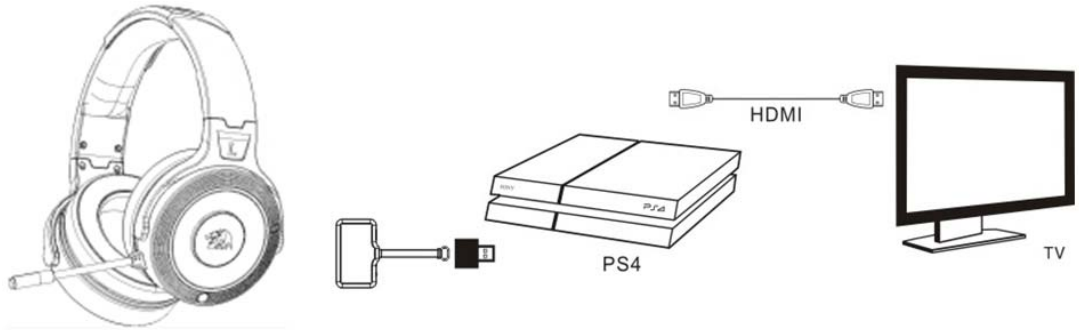

2) PS4 output audio settings

6.2.1)Find “settings” on main menu

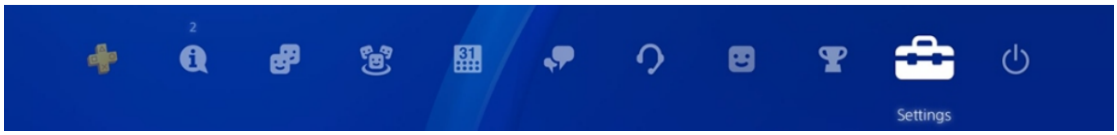

6.2.2) Find “Device” in settings

6.2.3)Find “Audio devices” in Device

6.2.4)Find “Output to headphones”in Audio devices

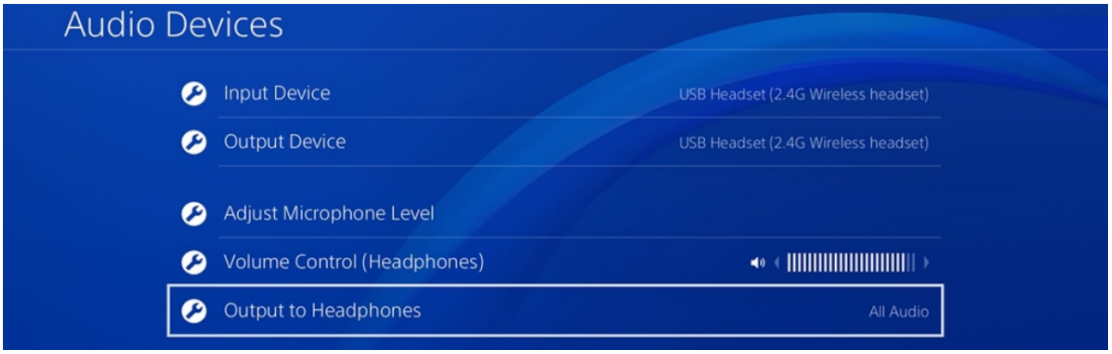

6.2.5)Click “All audio” from Output audio

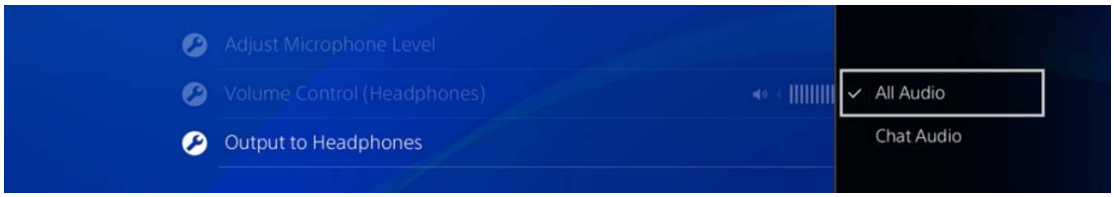

7. Connecting to Xbox ONE

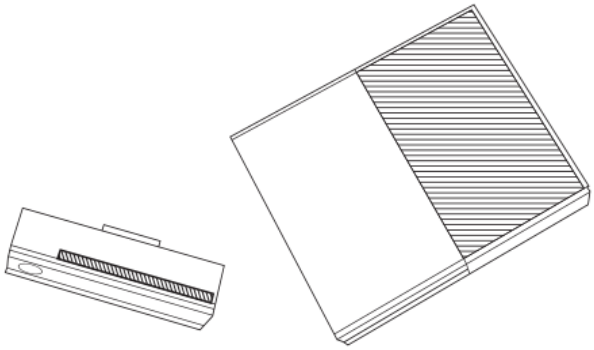

(Xbox ONE)

1）Connect headset to game pad of Xbox ONE by 3.5 audio cable(E) , **the headset now is turn to wired connecting status, power control button will be out of work.**

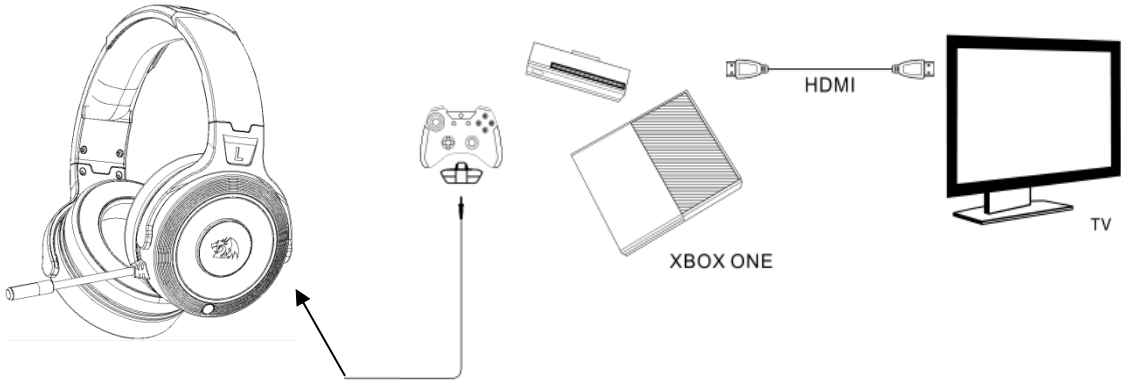

2) X BOX ONE output audio settings：

7.2.1) Click “All settings” in main menu

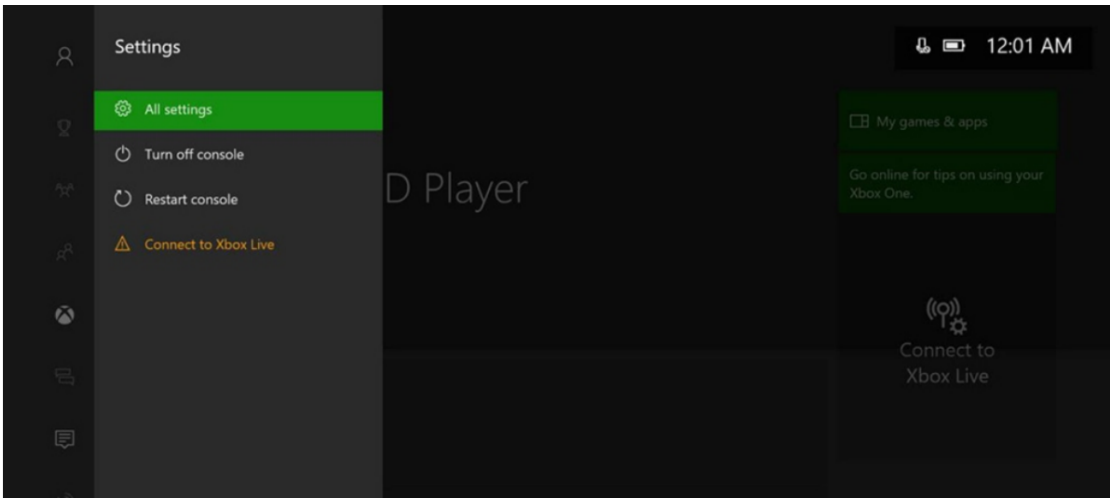

7.2.2)Click“Display & sound” in settings

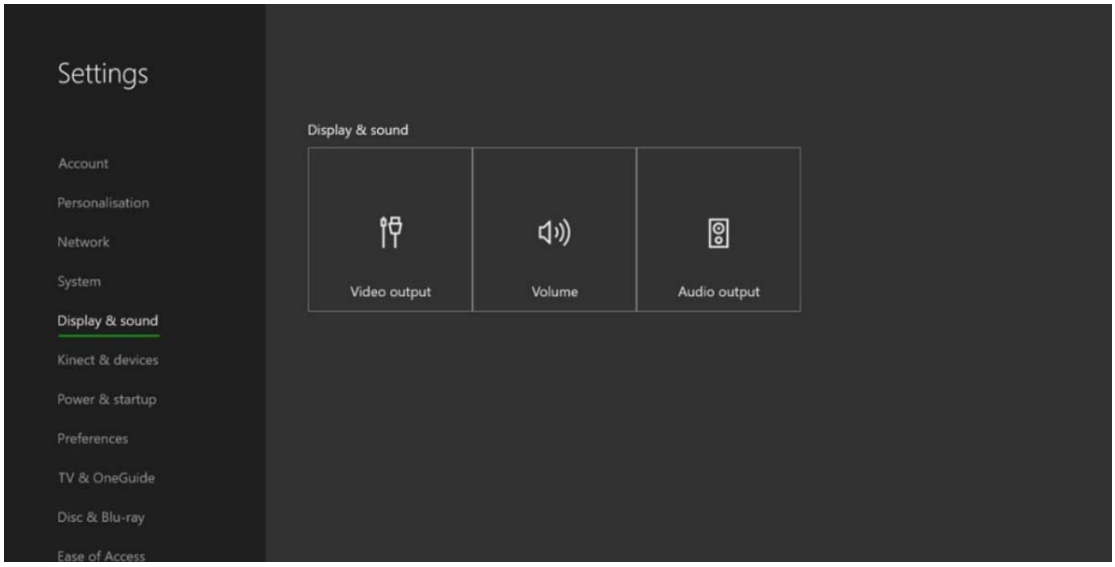

7.2.3)Click “Volume”

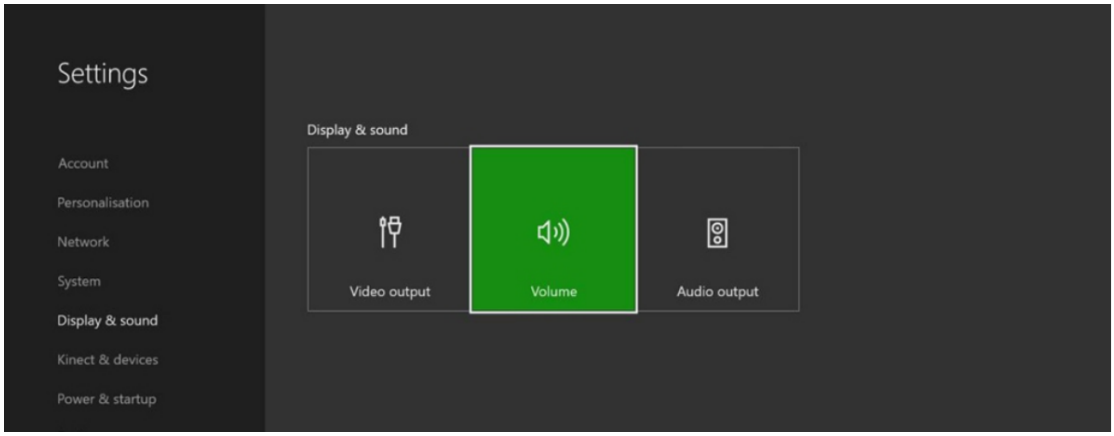

7.2.4)Click “Chat mixer” for setting

7.2.5)Click “Do nothing”

8.**Connecting to PC**

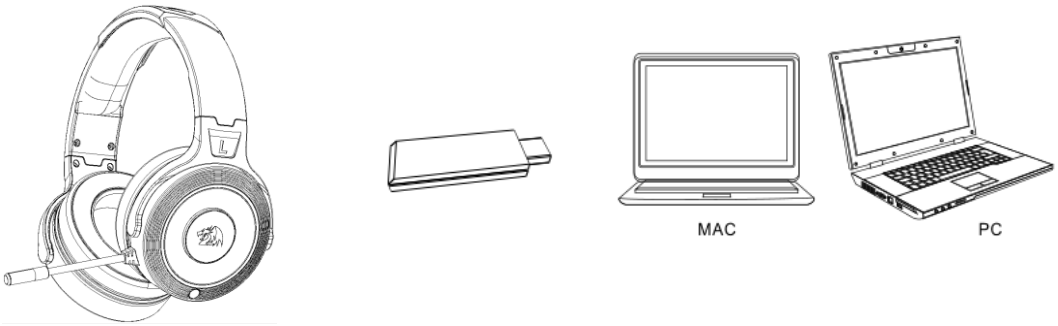

1) Plug the USB adaptor to transmitter(B+C), then plug it into computer, make sure no any mental objects between transmitter and headset

2) Windows OS setting (For example Win 7)

8.2.1) Turn on headset, pair to computer via the transmitter, the indicator will be light on, play music from PC , if there is no sound, find the desk of PC , click digital output

of the task bar at right down of desk as picture 1, click it by mouse right button, shows sound device settings as picture 2,

Picture 1 Picture 2

8.2.2)Click “play” by mouse left button as picture 3, choice “2.4G wireless headset” as picture 4, click it to set the headset as “default devices” at picture 5 .

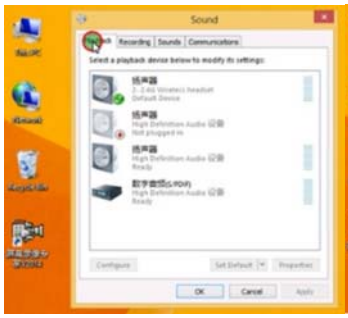

picture 3 picture 4 picture 5

8.2.3) Click” Record” as picture 6, then choice “2.4G wireless mouse” at microphone setting as picture 7, click “2.4G wireless mouse” as default device.

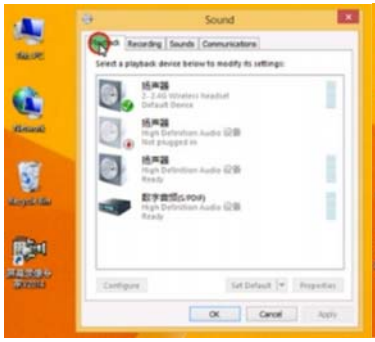

picture 6 picture 7 picture 8

9. Specification

Transmitter

Working voltage：5V

Frequency range：2403MHz-2477MHz

Delay time：24mS

Transmitting power：+2 dBm

Wireless working range: 10M

Receiving sensibility ：-85dBm

Headset

Battery working time：≥12h

Charging time： ≈5h

Frequency range：2403MHz-2477MHz

Delay time：24ms

Transmitting power：+2 dBm

Wireless working range: 10m

Receiving sensibility：-85dBm

Drive size：Φ40mm

Drive impedance ：32Ω

Frequency range: 20～20KHz

Microphone size :6*2.7mm

Microphone sensibility: -58dB

Microphone direction:

Microphone frequency response: 100Hz-8KHz

FCC Warning Statement

This device complies with Part 15 of the FCC Rules. Operation is subject to the following two conditions: (1) this device may not cause harmful interference, and
(2) this device must accept any interference received, including interference that may cause undesired operation

This device has been tested and found to comply with the limits for a Class B digital device, pursuant to Part 15 of the FCC Rules. These limits are designed to provide reasonable protection against harmful interference in a residential installation. This device generates, uses and can radiate radio frequency energy and, if not installed and used in accordance with the instructions, may cause harmful interference to radio communications.

However, there is no guarantee that interference will not occur in a particular installation. If this device does cause harmful interference to radio or television reception, which can be determined by turning the device off and on, the user is encouraged to try to correct the interference by one or more of the following measures:

--Reorient or relocate the receiving antenna.

--Increase the separation between the device and receiver.

--Connect the device into an outlet on a circuit different from that to which the receiver is

connected.
--Consult the dealer or an experienced radio/TV technician for help

Changes or modifications not expressly approved by the party responsible for compliance could void the user's authority to operate the equipment