Product Name:	e-FOB RF Keyless-entry System
Model Number:	TM-FF
Applicant:	TriMark
	500 Balley Ave. P.O. BOX 350. New Hampton, IA 50659
Date of Receipt:	Mar. 31,2006
Finished date of Test:	May 05, 2006
Applicable Standards:	47 CFR Part 15, Subpart C
	ANSI C63.4: 2003

We, **Spectrum Research & Testing Laboratory Inc.**, hereby certify that one sample of the above was tested in our laboratory with positive results according to the above-mentioned standards. The records in the report are an accurate account of the results. Details of the results are given in the subsequent pages of this report.

Checked By : Nick Hsieh , Date: 2006 / 5 / 12
(Nick Hsieh)

Approved By : , Date: 5/12/2006
(Johnson Ho, Director)

NVLAP®
Lab Code: 200099-0

FCC ID: TV2ERX

Table of Contents

1. DOCUMENT POLICY AND TEST STATEMENT 3
1.1 DOCUMENT POLICY 3
1.2 TEST STATEMENT 3
2. DESCRIPTION OF EUT AND TEST MODE 4
2.1 GENERAL DESCRIPTION OF EUT 4
2.2 DESCRIPTION OF EUT INTERNAL DEVICE 4
2.3 DESCRIPTION OF TEST MODE 4
2.4 DESCRIPTION OF SUPPORT UNIT 5
3. DESCRIPTION OF APPLIED STANDARDS 5
4. CONDUCTED EMISSION TEST 6
5. RADIATED EMISSION TEST 11
5.1 RADIATED EMISSION LIMIT 11
5.2 TEST EQUIPMENT 12
5.3 TEST SET-UP 13
5.4 TEST PROCEDURE 13
5.5 EUT OPERATING CONDITION 13
5.6 MAXIMUM MODULATION PERCENTAGE 13
5.7 RADIATED EMISSION TEST RESULT 14
9. PHOTOS OF TESTING 15
10. TERMS OF ABRIVATION 17

1. DOCUMENT POLICY AND TEST STATEMENT

1.1 DOCUMENT POLICY

- The report shall not be reproduced except in full, without the written approval of SRT Lab, Inc.
- The report must not be used by the applicant to claim that the product is endorsed by NVLAP.
- The NVLAP logo applies only to the applicable standards specified in this report.

1.2 TEST STATEMENT

- The test results in the report apply only to the unit tested by SRT Lab.
- There was no deviation from the requirements of test standards during the test.
- DC power supply was used during the test as a power source.
- The antennas were soldered on the PCB.

2. DESCRIPTION OF EUT AND TEST MODE

2.1 GENERAL DESCRIPTION OF EUT

PRODUCT	e-FOB RF Keyless-entry System
MODEL NO.	TM-FF
POWER SUPPLY	13.8Vdc, 135mA
CABLE	N/A
I/O PORT/INTERFACE	N/A
FREQUENCY RANGE	430-436MHz
NUMBER OF CHANNEL	1
CHANNEL SPACING	N/A
ANTENNA TYPE	Integral Antenna

NOTE: The EUT is the receiver part of a remote controller. For more detailed information, please refer to the specifications or User's manual provided by manufacturer.

2.2 DESCRIPTION OF EUT INTERNAL DEVICE

DEVICE	BRAND / MAKER	MODEL #	FCC ID/DOC	REMARK
N/A				

2.3 DESCRIPTION OF TEST MODE

The EUT was operated in continunely receiving mode.

2.4 DESCRIPTION OF SUPPORT UNIT

The EUT was configured by the requirement of ANSI C63.4 and CISPR 22. All interface ports were connected to the appropriate support units via specific cables. The support units and cables are listed below.

NO	DEVICE	BRAND	MODEL #	FCC ID/DOC	CABLE
1	DC Power Supply	LEADER	LPS-161A/ 8110190	N/A	1.5m unshielded power cord

NOTE: For the actual test configuration, please refer to the photos of testing.

3. DESCRIPTION OF APPLIED STANDARDS

The EUT is a kind of wireless product and according to the specifications provided by the applicant, must comply with the requirements of the following standards:

47 CFR Part 15, Subpart C

All tests have been performed and recorded as per the above standards.

4. CONDUCTED EMISSION TEST

4.1 CONDUCTED EMISSION LIMIT

FREQUENCY (MHz)	Class A (dBμV)		Class B (dBμV)	
	Quasi-peak	Average	Quasi-peak	Average
0.15 - 0.5	79	66	66 - 56	56 - 46
0.5 - 5.0	73	60	56	46
5.0 - 30.0	73	60	60	50

NOTE:

1. The lower limit shall apply at the transition frequencies.
2. The limit decreases in line with the logarithm of the frequency in the range of 0.15 to 0.50 MHz.

4.2 TEST EQUIPMENT

The following test equipment was used for the test:

EQUIPMENT/ FACILITIES	SPECIFICATIONS	MANUFACTURER	MODEL#/ SERIAL#	DUE DATE OF CAL. & CAL. CENTER
EMI TEST RECEIVER	9 kHz TO 2750 MHz	ROHDE & SCHWARZ	ESHS30/ 826003/008	AUG. 2006 ETC
LISN (for EUT)	50 μH, 50 ohm	SOLAR ELECTRONICS	FCC-LISN-50-25-2 / 01018	NOV. 2006 ETC
LISN (for Peripheral)	50μH, 50 ohm	SOLAR ELECTRONICS	9252-50-R-24-BNC / 951318	JUN. 2006 ETC
50 ohm TERMINATOR	50 ohm	HP	11593A/ 2	MAR. 2007 ETC
COAXIAL CABLE	3m	SUNCITY	J400/ 3M	JUL. 2006 SRT
ISOLATION TRANSFORMER	N/A	APC	AFC-11015/ F102040016	N/A
FILTER	2 LINE, 30A	FIL.COIL	FC-943/ 771	N/A
GROUND PLANE	2.3M (H) x 2.4M (W)	SRT	N/A	N/A
GROUND PLANE	2.4M (H) x 2.4M (W)	SRT	N/A	N/A

NOTE: The calibration interval of the above test equipment is one year and the calibrations are traceable to NML/ROC and NIST/USA.

4.3 TEST SETUP

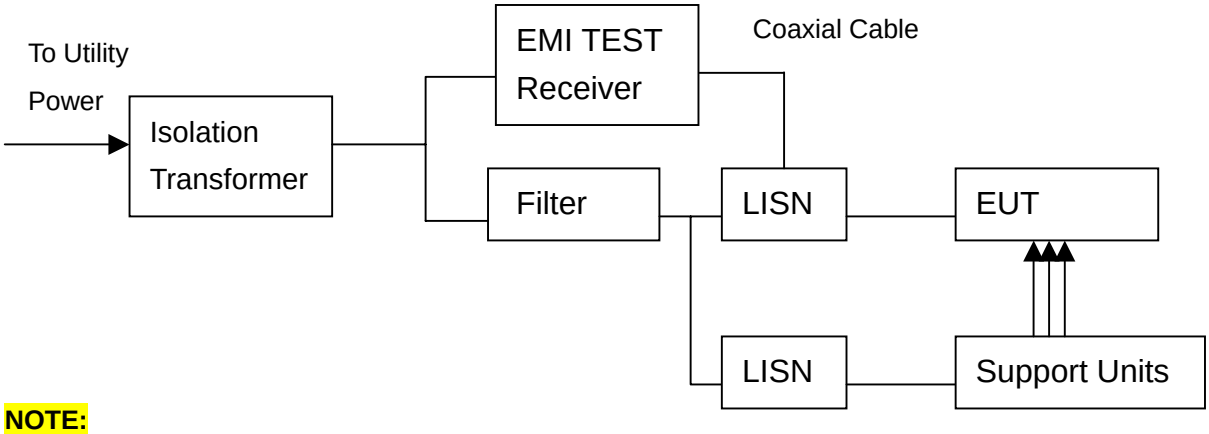

NOTE:

1. The EUT was put on a wooden table with 0.8m heights above ground plane, and 0.4m away from reference ground plane (> 2mx2m).
2. For the actual test configuration, please refer to the photos of testing.

4.4 TEST PROCEDURE

The EUT was tested according to the requirement of ANSI C63.4: 2003 and CISPR22:2003. The frequency spectrum from 0.15 MHz to 30 MHz was investigated. The LISN used was 50 ohm/50µH as specified. All readings were quasi-peak and average values with 10 kHz resolution bandwidth of the test receiver. The EUT system was operated in all typical methods by users. Both lines of the power mains of EUT were measured and the cables connected to EUT and support units were moved to find the maximum emission levels for each frequency.
First, find the margin or higher points at least 6 points by software, then use manual to find the maximum data. The procedure is referred on the test procedure of SRT LAB.

4.5 EUT OPERATING CONDITION

1. Under Windows XP ran “EMI TEST” and “WINFCC” programs.
2. PC sent "H" pattern or accessed the following peripherals directly or via EUT:
   - Color Monitor
   - RS232
   - Printer
   - FDD
   - HDD

4.6 TEST RESULT

Temperature:	22 °C	Humidity:	68 %RH
Ferquency Range:	0.15 – 30 MHz	Test Mode:	Link
Receiver Detector:	Q.P. and AV.	Tested By:	Nick Hsieh

Power Line Measured : Line

Freq. (MHz)	Correct. Factor (dB)	Reading Value (dBμV)		Emission Level (dBμV)		Limit (dBμV)		Margin (dB)	
		Q.P.	AV.	Q.P.	AV.	Q.P.	AV.	Q.P.	AV.
0.150	0.30	32.38	30.79	32.68	31.09	65.98	55.98	-33.30	-24.89
0.864	0.19	25.00	11.73	25.19	11.92	56.00	46.00	-30.81	-34.08
3.487	0.19	13.66	5.71	13.85	5.90	56.00	46.00	-42.15	-40.10
3.794	0.19	13.58	2.67	13.77	2.86	56.00	46.00	-42.23	-43.14
11.486	0.24	-2.52	-7.18	-2.28	-6.94	60.00	50.00	-62.28	-56.94
18.434	0.35	12.26	7.81	12.61	8.16	60.00	50.00	-47.39	-41.84

Power Line Measured : Neutral

Freq. (MHz)	Correct. Factor (dB)	Reading Value (dBμV)		Emission Level (dBμV)		Limit (dBμV)		Margin (dB)	
		Q.P.	AV.	Q.P.	AV.	Q.P.	AV.	Q.P.	AV.
0.150	0.30	31.94	30.62	32.24	30.92	65.98	55.98	-33.74	-25.06
0.879	0.19	20.98	12.01	21.17	12.20	56.00	46.00	-34.83	-33.80
1.418	0.15	9.40	6.01	9.55	6.16	56.00	46.00	-46.45	-39.84
3.487	0.19	6.44	-0.71	6.63	-0.52	56.00	46.00	-49.37	-46.52
11.202	0.23	3.08	-5.86	3.31	-5.63	60.00	50.00	-56.69	-55.63
21.622	0.29	15.94	0.80	16.23	1.09	60.00	50.00	-43.77	-48.91

NOTE :

1. Measurement uncertainty is +/-1.32dB
2. Emission level = Reading value + Correction factor
3. Correction Factor = Cable loss + Insertion loss of LISN
4. Margin value = Emission level - Limit
5. The emission of other frequencies were very low against the limit.
6. "-": The Quasi-peak reading value also meets average limit and measurement with the average detector is unnecessary.

Line

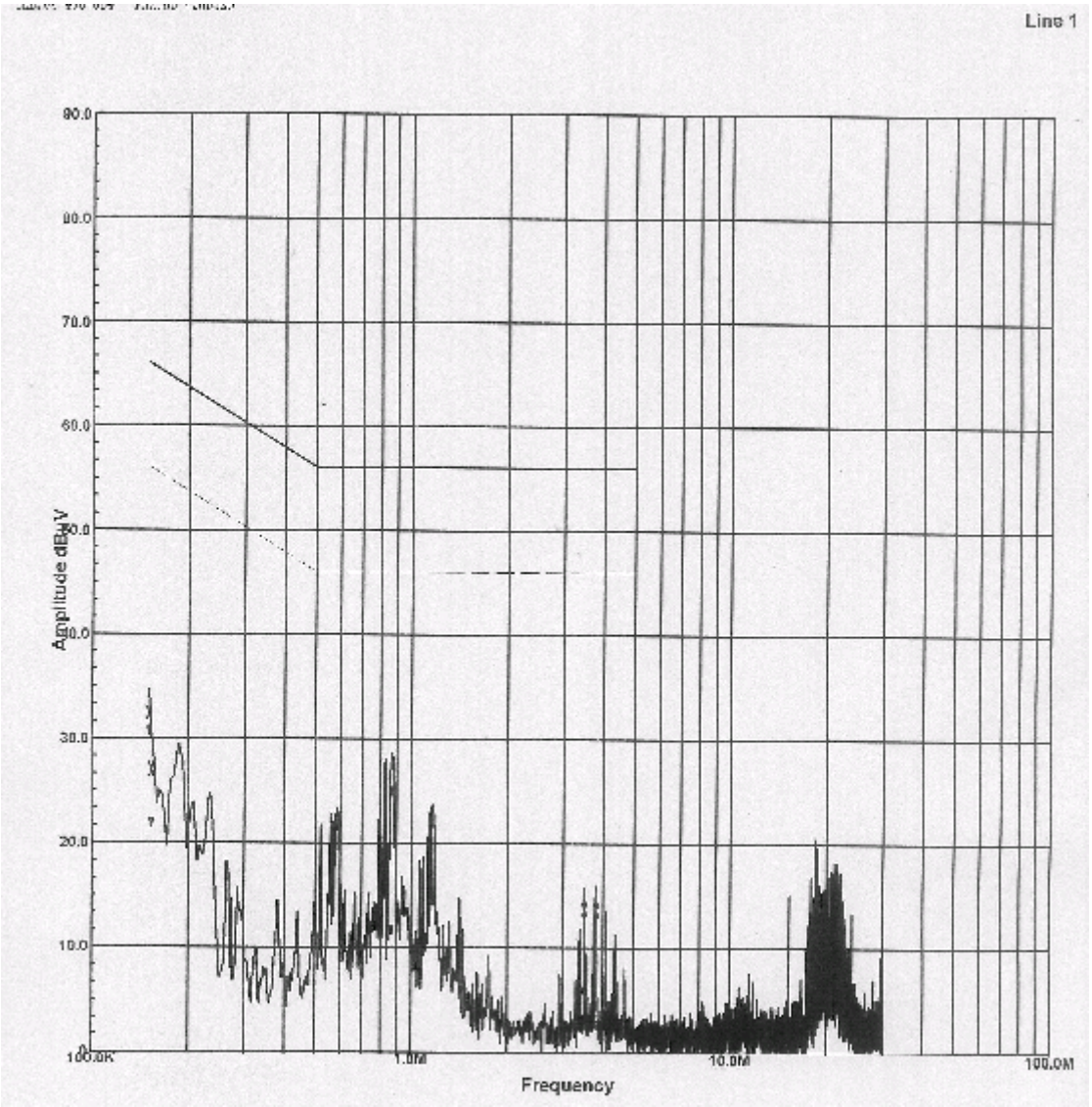
Line 1
80.0
70.0
60.0
30.0
20.0
10.0
0
Amplitude dBuV
100.0K
1.0M
10.0M
100.0M
Frequency

Neural

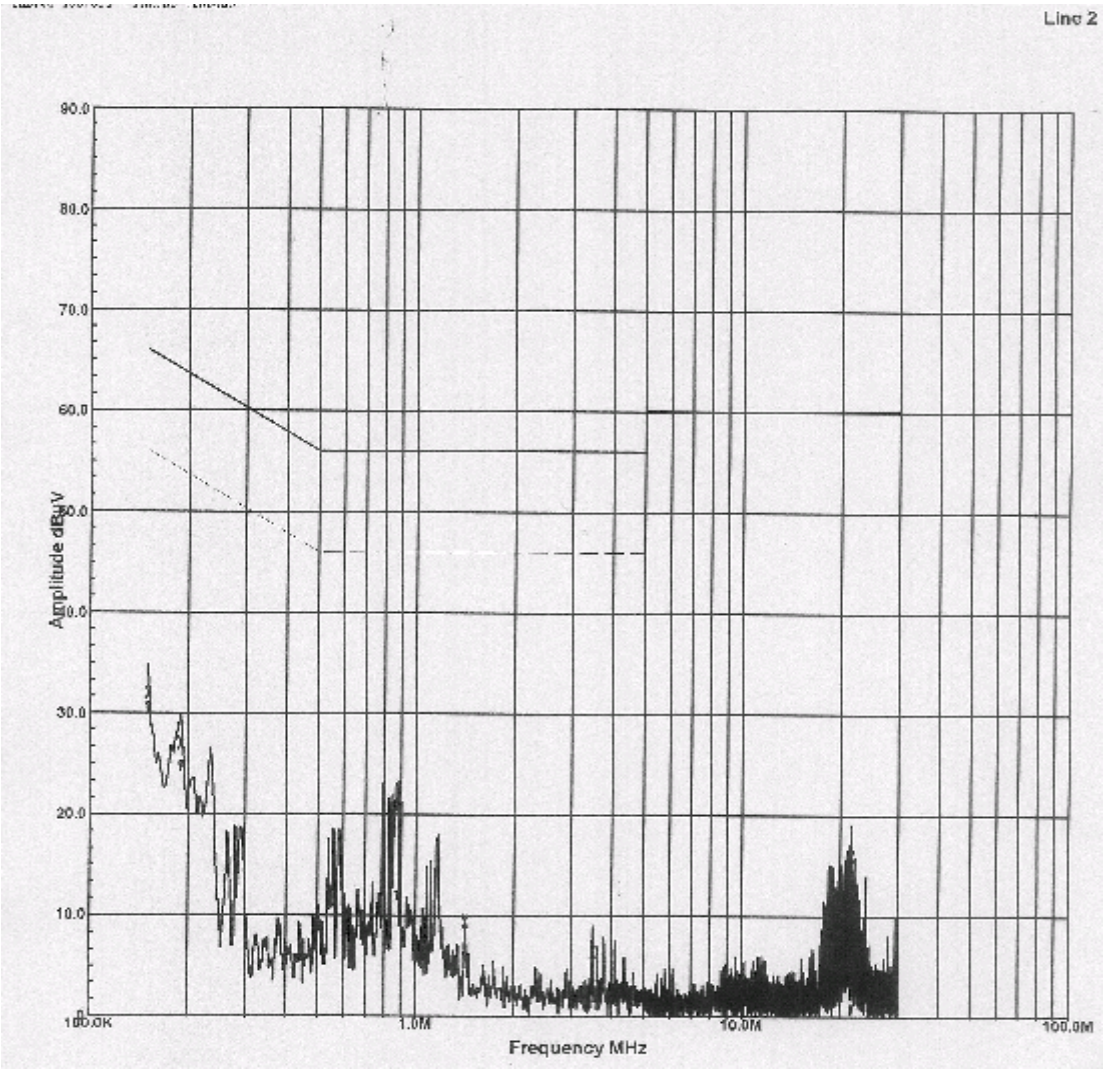
Line 2
90.0
80.0
70.0
60.0
50.0
40.0
30.0
20.0
10.0
0
Amplitude dBuV
100.0K
1.0M
10.0M
100.0M
Frequency MHz

5. RADIATED EMISSION TEST

5.1 RADIATED EMISSION LIMIT

FCC part15C 15.209 limits of radiated emission measurement for frequency below 1000 MHz

FREQUENCY (MHz)	DISTANCE (m)	FIELS STRENGTH (dBμV/m)
30 - 88	3	40.0
88 - 216	3	43.5
216 - 960	3	46.0
ABOVE 960	3	54.0

FCC part15C 15.231(b) limit of fundamental and spurious emissions measurement.

FREQUENCY (MHz)	Field Strength of Fundamental (microvolts/meter)	Field Strength of Spurious Emissions (microvolts/meter)
40.66-40.70	2250	225
70-130	1250	125
130-174	1250 to 3750 (NOTE 5)	125 to 375 (NOTE 7)
174-260	3750	375 (NOTE 7)
260-470	3750 to 12500 (NOTE 6)	375 to 1250
Above 470	12500	1250

NOTE:

1. The lower limit shall apply at the transition frequencies.
2. Emission level (dBμV/m) = 20 log Emission level (μV/m).
3. In the emission tables above, the tighter limit applies at the band edges.
4. Distance refers to the distance between measuring nstrument, antenna, and the closest point of any part of the device or system.
5. Limit = 20log(56.81818(F) - 6136.3636) ; F : Fundamental Frequency (MHz)
6. Limit = 20log(41.667 x F – 7083.3333) ; F : Fundamental Frequency (MHz)
7. Limit = The Limit of Fundamental Frequency – 20dB
8. The maximum permitted unwanted emission level is 20 dB below the maximum permitted fundamental level.

5.2 TEST EQUIPMENT

The following test equipment was used during the radiated emission test :

EQUIPMENT/ FACILITIES	SPECIFICATIONS	MANUFACTURER	MODEL#/ SERIAL#	DUE DATE OF CAL. & CAL. CENTER
EMI TEST RECEIVER	9 kHz TO 2750 MHz	ROHDE & SCHWARZ	ESCS30/ 836858/008	AUG. 2006 ETC
BI-LOG ANTENNA	25 MHz TO 2 GHz	EMCO	3142/ 9701-1124	APR. 2007 SRT
PRE-AMPLIFIER	1GHz-26.5GHz Gain:30dB(typ.)	HP	8449B/ 3008A01019	DEC. 2006 ETC
SPECTRUM	9KHz TO 26.5GHz	HP	8953E/ 3710A03220	MAY 2006 ETC
HORN ANTENNA	1GHz TO 18GHz	EMCO	3115/ 9602-4681	NOV. 2006 ETC
OATS	3 – 10 M MEASUREMENT	SRT	SRT-1	APR. 2007 SRT

1. The calibration interval of the above test equipment is one year and the calibrations are traceable to NML/ROC and NIST/USA.
2. The Open Area Test Site (SRT-1) is registered by FCC with No. 90957 and VCCI with No. R-1081.
3. The Open Area Test Site (SRT-2) is registered by FCC with No. 98458 and VCCI with No. R-1168.

5.3 TEST SET-UP

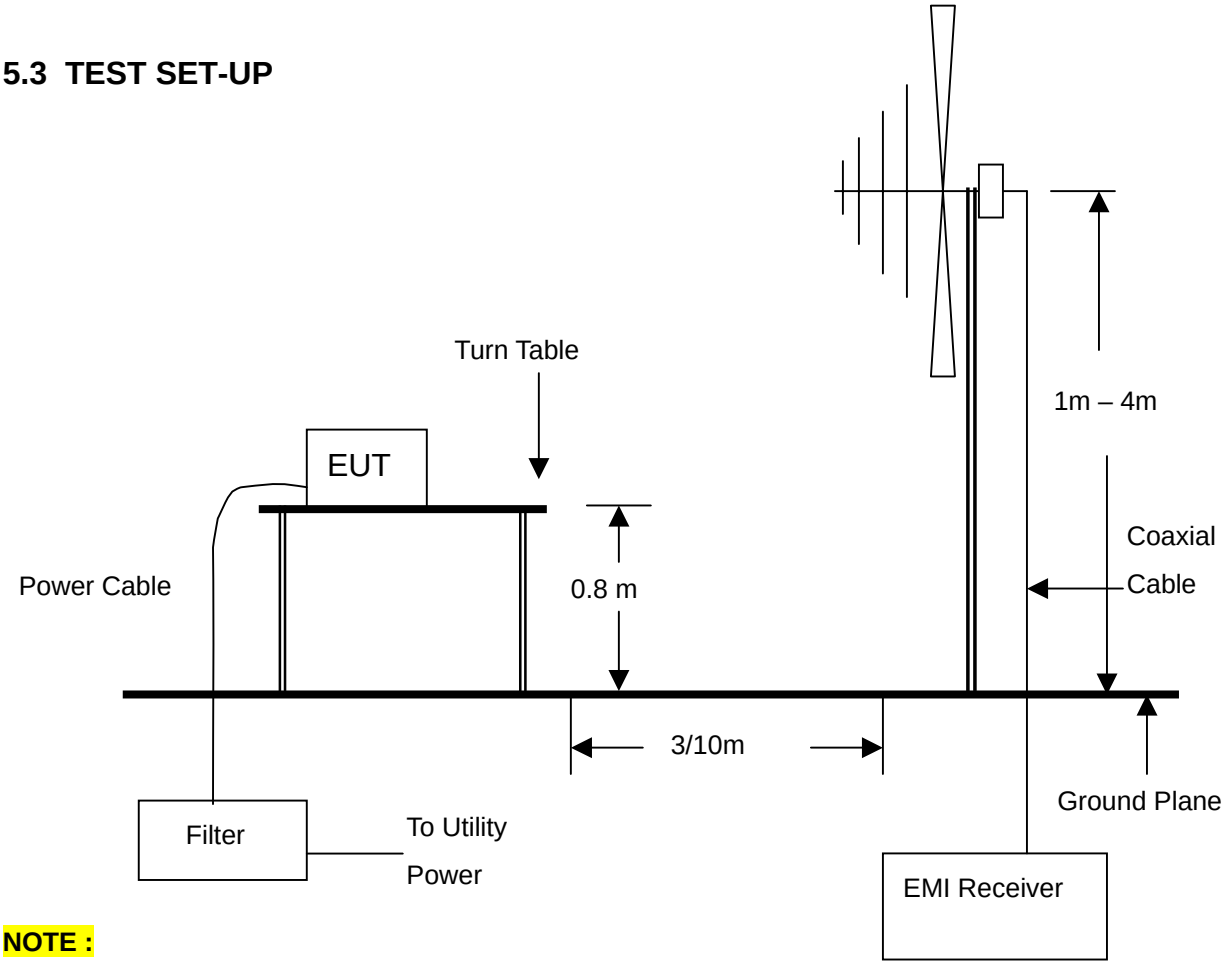

NOTE :

1. The EUT system was put on a wooden table with 0.8m heights above a ground plane.
2. For the actual test configuration, please refer to the photos of testing.

5.4 TEST PROCEDURE

The EUT was tested according to the requirement of ANSI C63.4 and CISPR 22. The measurements were made at an open area test site with 3 meter measurement distance under 1 GHz and with 3m distance above 1GHz. The frequency spectrum measured started from 30 MHz. Under 1 GHz, all readings were quasi-peak values with 120 kHz resolution bandwidth of the test receiver. Above 1 GHz, the measurements were made at an open area test site with 3 meter measurement distance and all readings were peak or average values with 1 MHz resolution bandwidth of the test receiver. The EUT system was operated in all typical methods by users. The cables connected to EUT and support units were moved to find the maximum emission levels for each frequency.

5.5 EUT OPERATING CONDITION

Same as section 2.3 of this report.

5.6 Maximum Modulation Percentage

Duty Cycle = 50%

5.7 RADIATED EMISSION TEST RESULT

Temperature:	22℃	Humidity:	68%RH
Ferquency Range:	30MHz – 5GHz	Measured Distance:	3m
Receiver Detector:	Peak/QP/AV	Tested By:	Nick Hsieh

RX

Frequency (MHz)	Correct Factor (dB)	Antenna Factor (dB/m)	Polarization	Reading (dBμV) Peak/QP	Emission Level (dBμV/m) Peak/QP	Limit (dBμV/m) Peak/QP	Margin (dB) Peak/QP	AZ (°)	EL (m)
152.2550	2.17	9.24	H	6.0	17.4	43.5	-26.1	268.9	1.4
300.1000	3.02	13.70	H	3.9	20.6	46.0	-25.4	130.2	1.2
502.3050	4.13	16.13	H	3.8	24.1	46.0	-21.9	98.2	1.2
601.0850	4.60	17.44	H	8.5	30.5	46.0	-15.5	129.6	1.1
802.4300	5.34	21.91	H	2.3	29.6	46.0	-16.4	78.3	1.1
932.5900	5.86	22.85	H	2.4	31.1	46.0	-14.9	220.6	1.2
167.0350	2.28	10.12	V	4.5	16.9	43.5	-26.6	221.1	1.3
401.3000	3.61	15.90	V	3.6	23.1	46.0	-22.9	296.3	1.2
428.3400	3.75	15.96	V	3.6	23.3	46.0	-22.7	88.7	1.1
649.1370	4.76	19.16	V	3.5	27.4	46.0	-18.6	20.3	1.1
732.9250	5.13	21.29	V	2.9	29.3	46.0	-16.7	117.2	1.0
840.9600	5.53	22.14	V	2.0	29.7	46.0	-16.3	89.5	1.0

NOTE :

1. Measurement uncertainty is +-/2dB.
2. "*": Measurement value was too low to be detected.
3. Emissiom Level = Reading Value + Ant. Factor + Cable Loss.
4. The field strength of other emission frequencies were very low against the limit.
5. The emission level is lower than equipment ‘s noise.
6. Above 1GHz and up to 4.5GHz, the noise is very small.

9. PHOTOS OF TESTING

Conducted test-RX

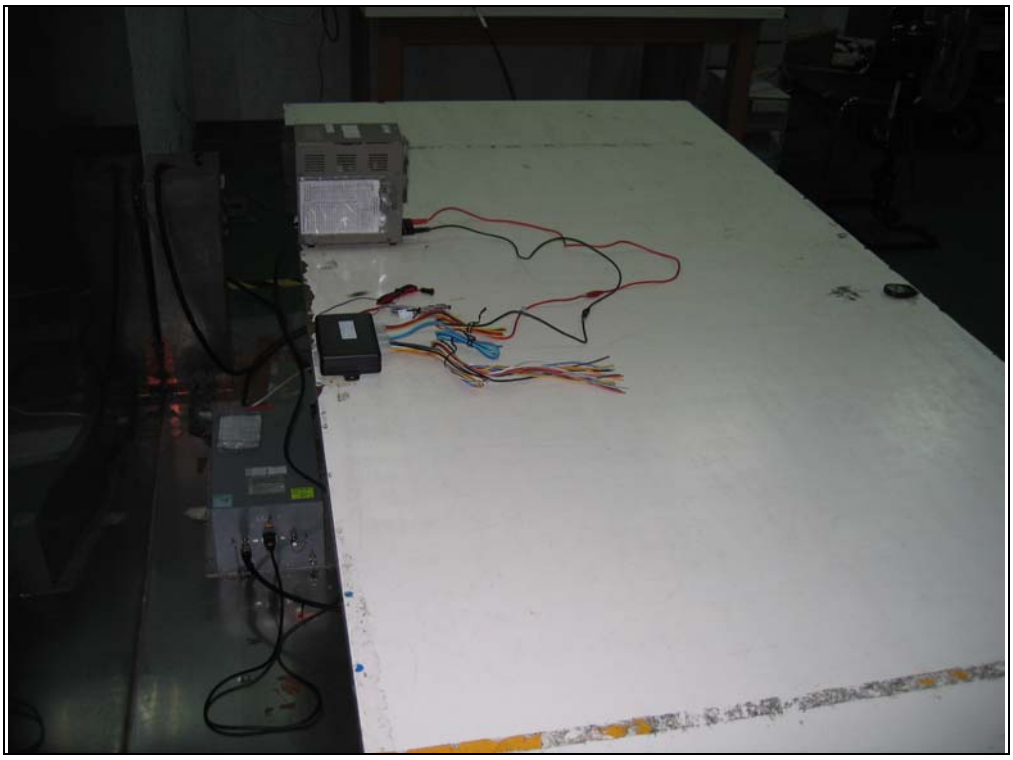

Radiated test-RX

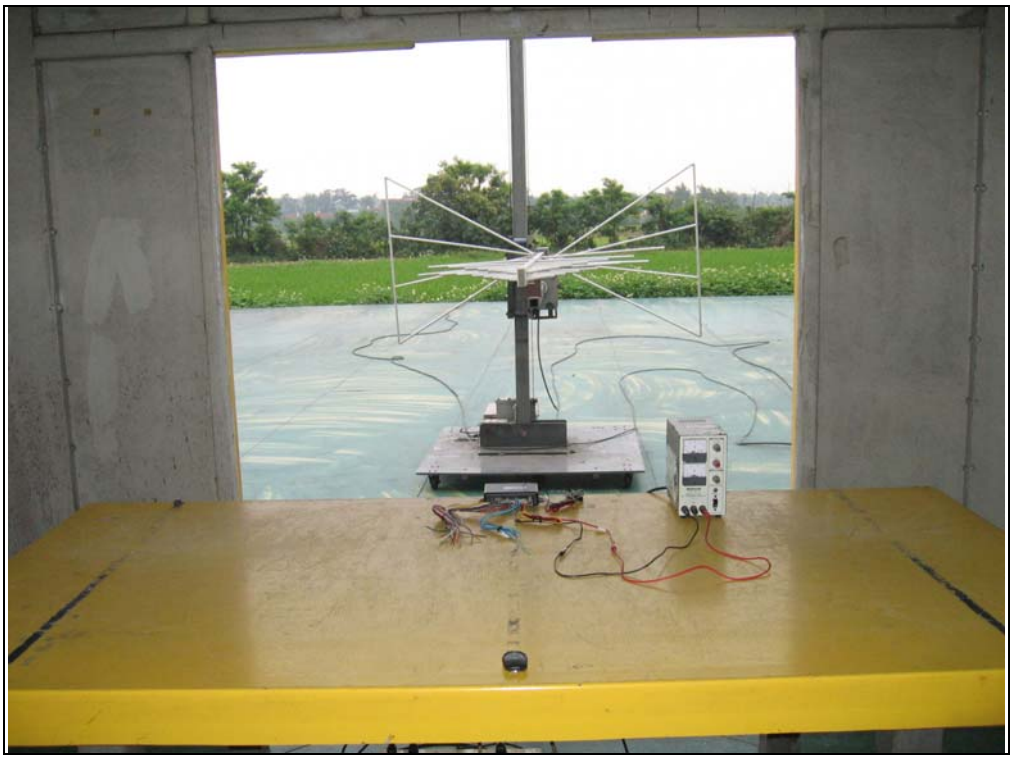

10. TERMS OF ABRIVATION

AV.	Average detection
AZ(°)	Turn table azimuth
Correct.	Correction
EL(m)	Antenna height (meter)
EUT	Equipment Under Test
Horiz.	Horizontal direction
LISN	Line Impedance Stabilization Network
NSA	Normalized Site Attenuation
PK.	Peak detection
Q.P.	Quasi-peak detection
SRT Lab	Spectrum Research & Testing Laboratory, Inc.
Vert.	Vertical direction