WNC
啓碁科技股份有限公司

Parts Specification Cover

Customer	**Wistron Neweb Corporation**
WNC P/N	**08.20070.001**
Supplier	士誼科技股份有限公司
Brand	
Supplier P/N	IHF-2120MPA9-W015
Revision	

MFG	ADDRESS	TEL
士誼科技股份有限公司 **Tel:+886-3-4335698** **Fax:+886-3-4336340** 桃園市中壢區中壢工業區東園二路**5**號	士誼科技股份有限公司 **Tel:+886-3-4335698** **Fax:+886-3-4336340** 桃園市中壢區中壢工業區東園二路**5**號	士誼科技股份有限公司 **Tel:+886-3-4335698** **Fax:+886-3-4336340** 桃園市中壢區中壢工業區東園二路**5**號

approval	reviewer	prepared
士誼科技股份有限公司 研發部 發行章	士誼科技股份有限公司 研發部 發行章	士誼科技股份有限公司 研發部 發行章

Form No.:705-N0016-06,002

承　認　書

APPROVAL SHEET

CUSTOMER: 啟碁科技

CUSTOMER MODEL NO.:

JOYMAX MODEL NO.: IHF-2120MPA9-W015

DESCRIPTION: #2120 Antenna

REV.: B

DATE: 2024/8/16

Customer Approval	Joymax Approval
	士誼科技股份有限公司 研發部 發行章 桃園市中壢區中壢工業區東園二路5號

士誼科技股份有限公司
JOYMAX INC.

Tel:+886-3-4335698 Fax:+886-3-4336340
E-mail: info@joymax.com.tw

桃園市中壢區中壢工業區東園二路5號
No.5 Dong Yuan Rd.2,Jhongli industrial Park,
Jhongli Dist,Tao Yuan,Taiwan,R.O.C.
http://www.joymax.com.tw

Index

1. Specification & Dimension ---------- 4

2. Test Condition & Report

2.1 V.S.W.R ---------- 5

2.2 Pattern ---------- 6

2.3 Gain and Efficiency ---------- 8

3. Package ---------- 10

Modification History:

Rev.	Date	Content
A	**2024/7/18**	
B	**2024/8/16**	Specification Add Antenna Type

1. Specification & Dimension

Electrical Properties	
Frequency Range	2.4~2.4835GHz
Impedance	50Ω
V.S.W.R.	≤2.3
Radiation	Omni
Gain	Unity
Polarization	Vertical
Antenna Type	Monopole
Test Ground Size	120*120*30mm
Mechanical Properties	
Radome Material	Plastic /White
Connector Type	I-PEX MHF1
Dimension	L=14mm
Weight	3 g (est)
Operating Temp.	−40℃ ~ +75℃
Storage Temp.	−40℃ ~ +75℃

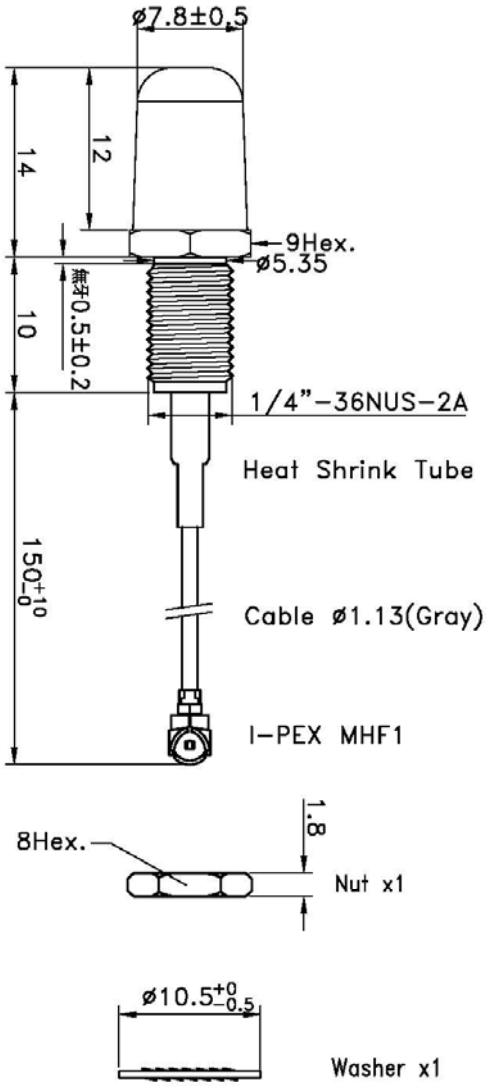

REV	ZONE	DESCRIPTION	ECN NO.	ENG	APPROVED	DATE
B	4F	Add Antenna Type	JE11-240800040	JOAN	SARA	2024/8/16

UNLESS OTHERWISE SPECIFIED TOLERANCES ON: X ± 1, X.X ± 0.5, X.XX ± 0.25, X.XXX ± 2.0, ANG. ± 2.0°
THIRD ANGLE PROJECTION

DRAWN BY: Ian
DESIGNED BY:
CHECKED BY: KYLIU
APPROVED BY: SARA

MATERIAL:
FINISH:
SCALE:2/1;UNIT:mm
DATE:2024/07/23
REV: B

TITLE : #2120 Antenna
DRAW NO. : SSP-230281
PART NO. : IHF-2120MPA9-W015

JOYMAX INC.

THIS DRAWING CONTAINS INFORMATION THAT IS PROPRIETARY TO JOYMAX AND SHOULD NOT BE USED WITHOUT WRITTEN PERMISSION.

JW0002_0002

2.Test Condition & Report
2.1 V.S.W.R

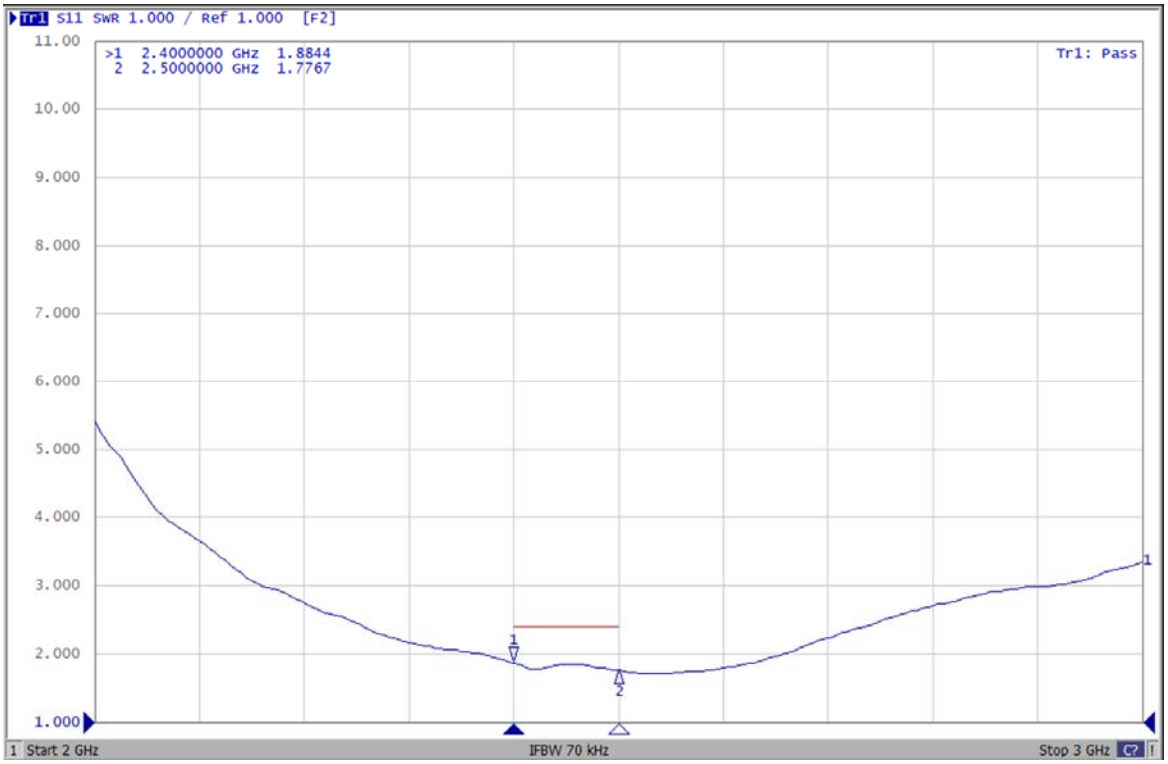

2.2 Chamber Test Environment

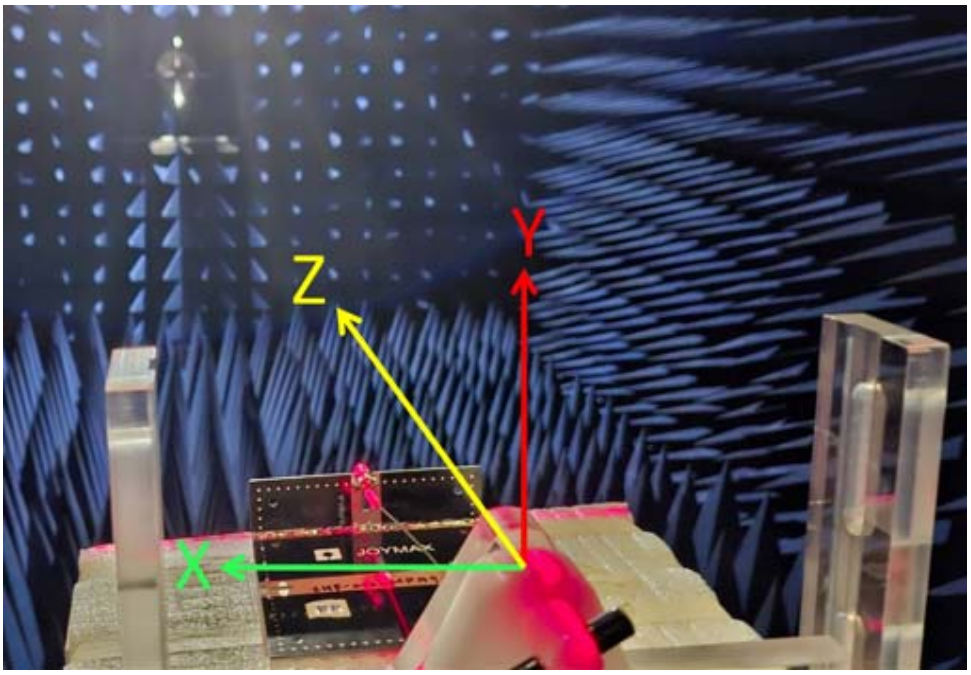

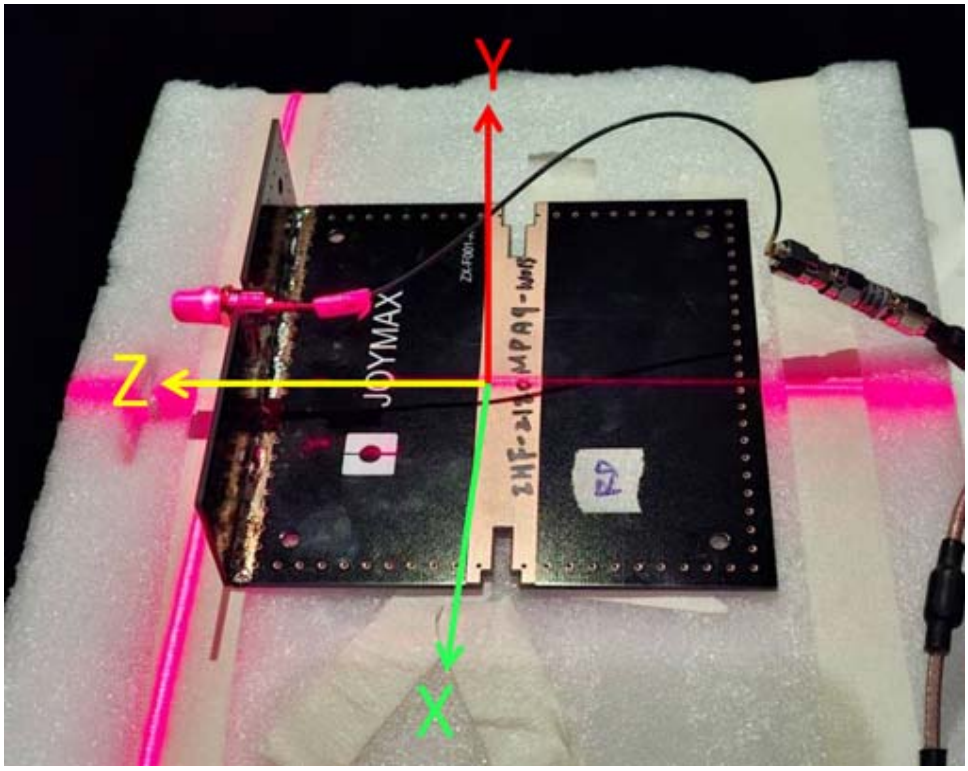

2.2 Pattern

2400MHz	2450MHz
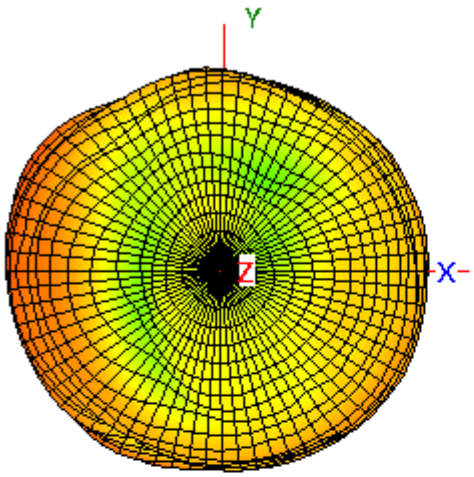	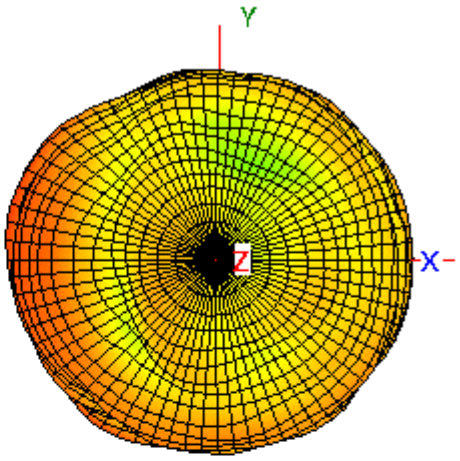

2483.5MHz
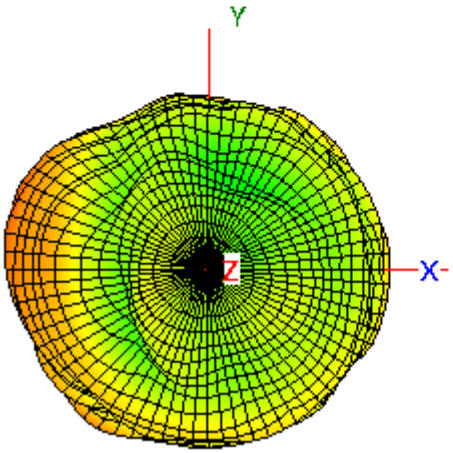

2.3 Gain and Efficiency

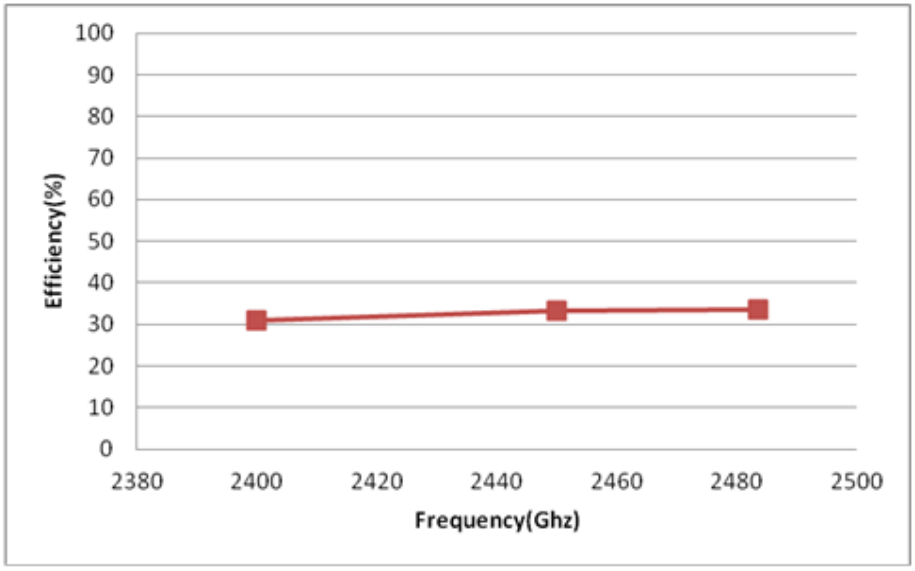

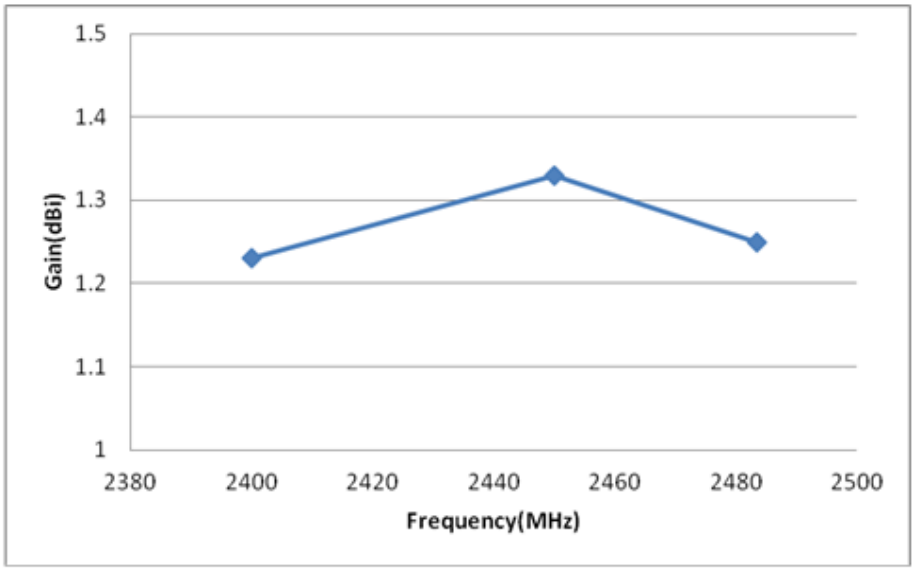

Frequency (MHz)	2400	2450	2483
Gain (dBi)	1.23	1.33	1.25
Efficiency (%)	31.06	33.21	33.52

Pattern Test Equipment

Anechoic chamber: 100MHz~6GHz 8*6*6m (※ 1m Quiet zone at 800MHz)
Source Antenna: ETS-3164 Dual Polarized Horn
Network Analyzer: Agilent E5071B 100kHz~8.5GHz

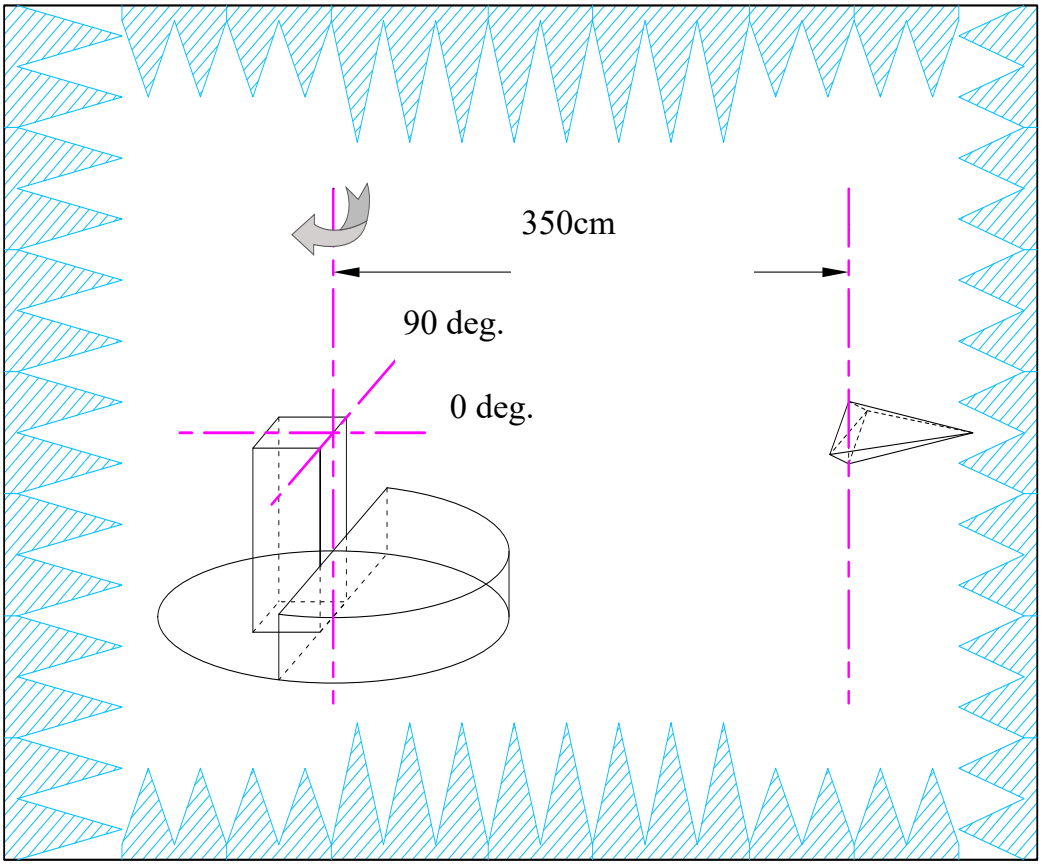

3. Package

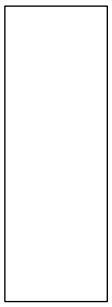

1 10pcs antenna / 1 PE bag

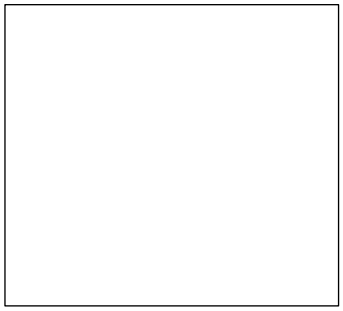

2 50pcs antenna / 1 PE bag

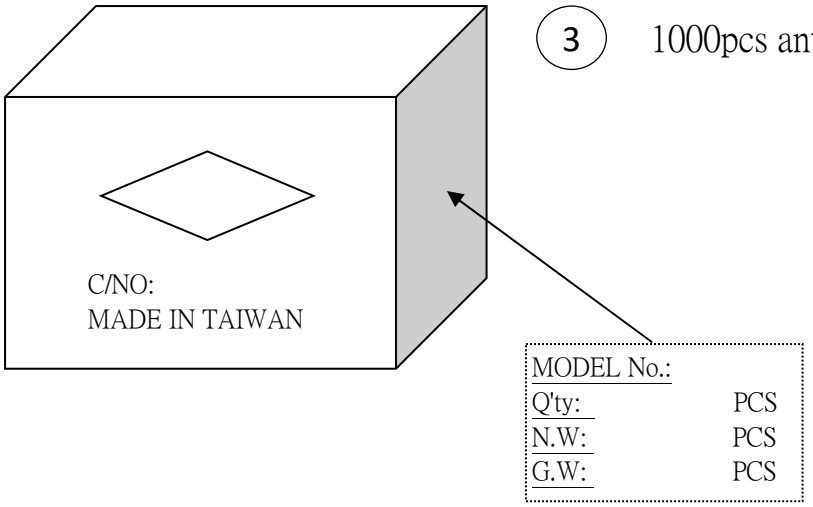

3 1000pcs antenna / 1 Carton

Packing q'ty is for reference only, adjust it based on production packing.