# QuickStart Guide

## FortiSwitch Rugged 108F

FSR-108F

# The Essentials

## Secure your Network

Register at https://support.fortinet.com for the latest threat protection updates

## GUI

1. Connect MGMT to an Ethernet port or USB-RJ45 Ethernet adapter on your computer using an Ethernet cable
2. Open a browser to https://192.168.1.99

## CLI

1. Connect the provided console cable to the Console Port
2. Open a Terminal app using 115200-8-N-1

## Default Logins

https://192.168.1.99
Username: ***admin***
Password: **leave blank**

https://fortiedge.forticloud.com
Username: ***user-defined***
Password: ***user-defined***

## Fortinet Documents Library

For getting started documentation admin guides, up-to-date hardware manuals and reference resources, visit https://docs.fortinet.com/

## FortiEdge Cloud

Experience simplified cloud provisioning, zero touch deployment, configuration management and reporting at https://fortiedge.forticloud.com



# Package Contents

## FortiSwitch Rugged 108F

FSR-108F

1x FortiSwitch Rugged Device

1x QuickStart Guide

1x CAT5e Ethernet Cable

1x Console Cable

1x Digital I/O Connector

1x DC Power Connector

1x DIN Rail Bracket
4x M3×5 mm Screws
(pre-installed)

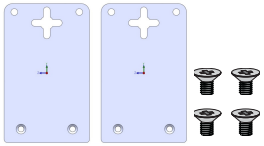

2x Wall Mount Brackets
4x M3×8 mm FH Screws

# Setup

## GUI

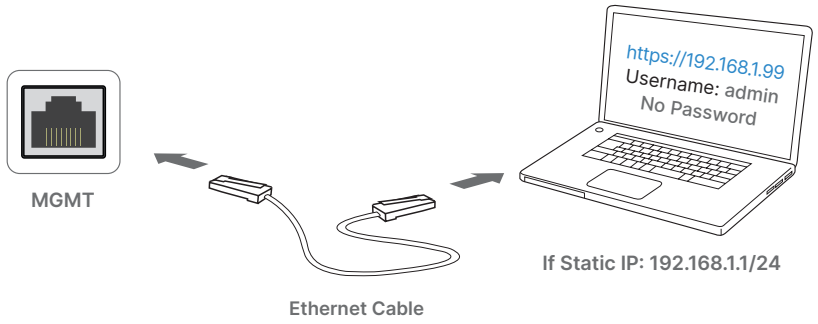


## CLI

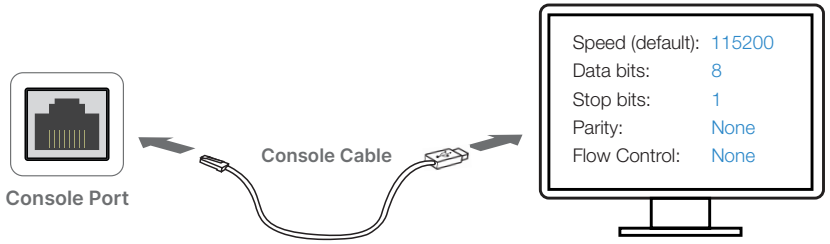


## FortiLink

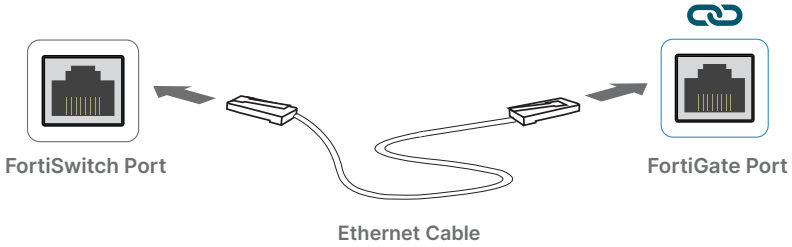


1. Login to the FortiGate and go to **WiFi and Switch Controller -> FortiLink Interface**
2. **Add a FortiGate Port** in the FortiLink interface
3. When the device is discovered, select **Authorize**

**Optional:** To automatically authorize the device upon discovery, enable **Automatically authorize devices** in the FortiLink Interface settings

## FortiEdge Cloud

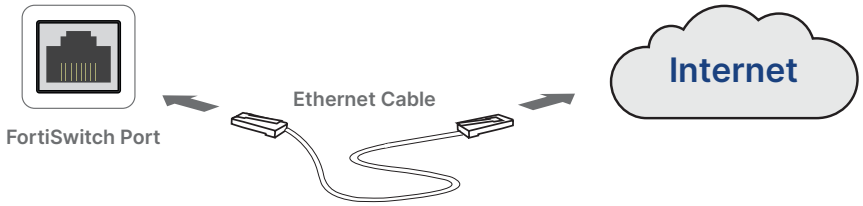


1. Visit https://support.fortinet.com for registration and cloud management license
2. Sign in at https://fortiedge.forticloud.com to manage your Inventory List

# Power Installation

## Warnings

- Input: 12-57VDC, 1.48A Max (x2)
- With the optional failover redundancy, if the primary DC input fails, the secondary DC input will supply power
- DC1+ and DC2+ are the higher voltage potential pins and DC1- and DC2- are the lower voltage potential pins
- Do not connect the DC+ terminal to a lower voltage potential than the DC- terminal
- The voltage between DC+ and DC- must be +12-57VDC
- The DC wire gauge maximum is 12 AWG; the minimum is 18 AWG, 4.5 lb-in Torque
- Operating temperature: -40ºC to 75ºC
  - -40ºC to 65ºC (Sealed enclosure – 0m/s Air Flow)
  - -40ºC to 70ºC (Vented enclosure – 0.2m/s Air Flow)
  - -40ºC to 75ºC (Fan or blower equipped enclosure – 1m/s Air Flow)

## Wiring

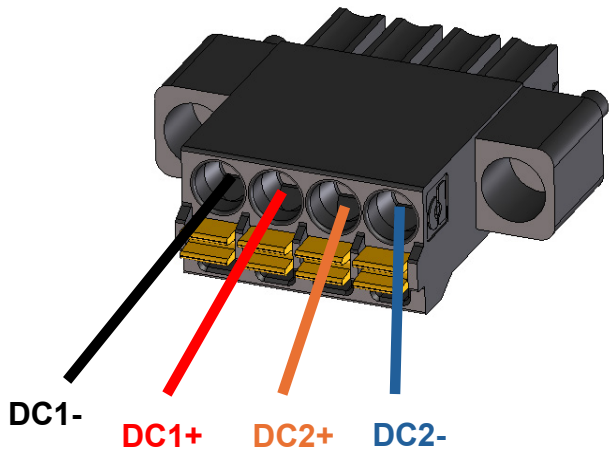


## Grounding (Optional)

We recommend connecting earth ground using a lug plate or grounding screw.

## Power Connector

Connect DC1+ or DC2+ on the device terminal block to the DC power source, then connect the negative DC1- or DC2- on the terminal block. Terminal block does not support hot-plugging.

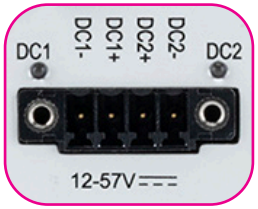


| DC Input Power | DC+ Terminal | DC- Terminal |
|---|---|---|
| Negative Ground | +12-57VDC Max | Ground |
| Positive Ground | Ground | -12-57VDC Max |

## Digital I/O Connector

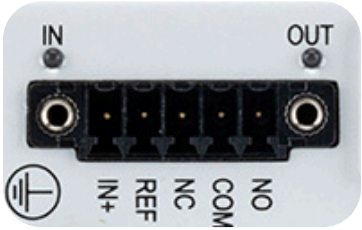


| Connector | Description |
|---|---|
| IN+ | Alarm Input |
| REF | Alarm Input Reference Ground |
| NC | Normally Closed Terminal |
| COM | Common Terminal |
| NO | Normally Open Terminal |

# Dimensions

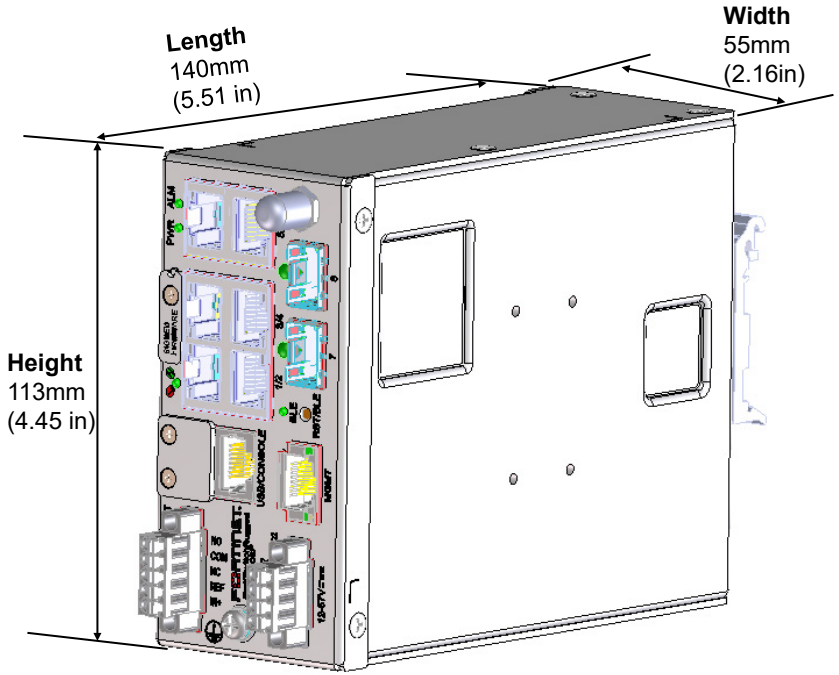


**NOTE**: The DIN Rail Bracket is pre-installed

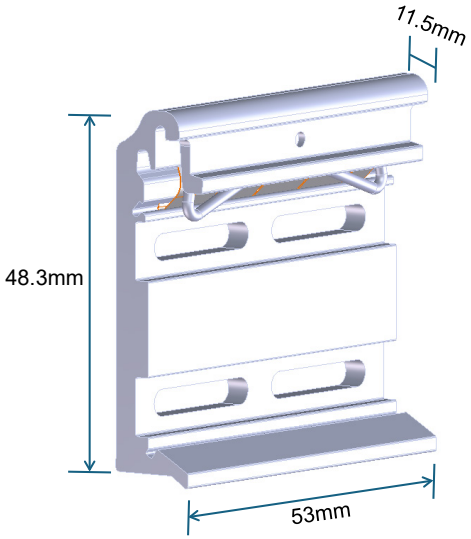


# DIN Rail Mount

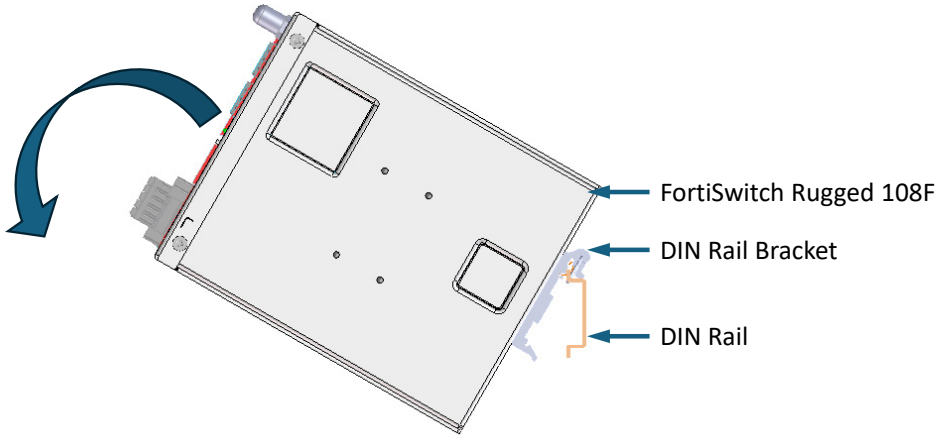


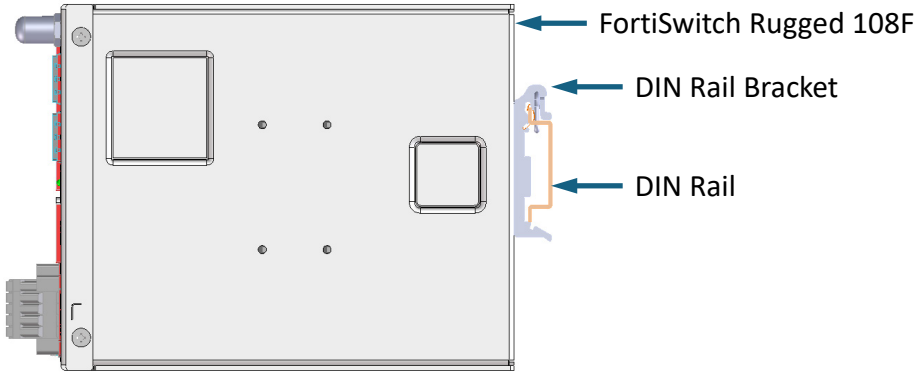

# Wall Mount

**NOTE**: Anchors and screws not provided. Recommended screw size is M3.5×16

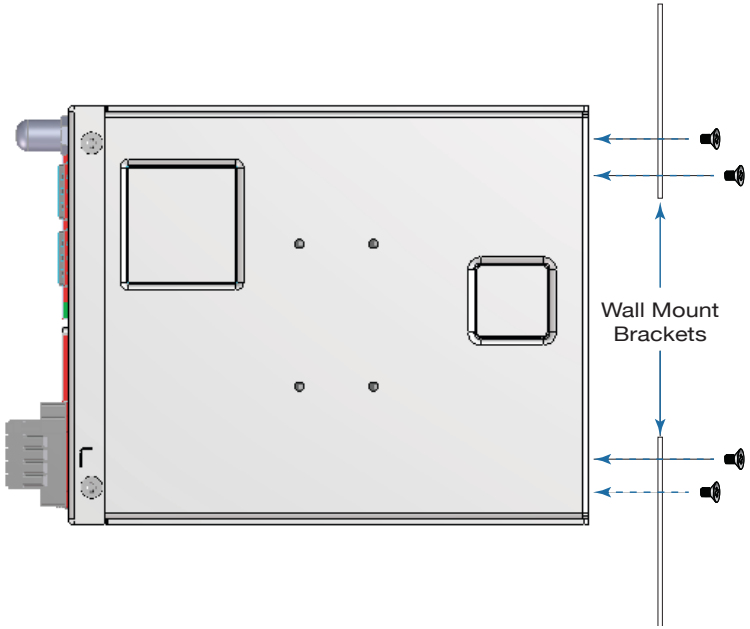


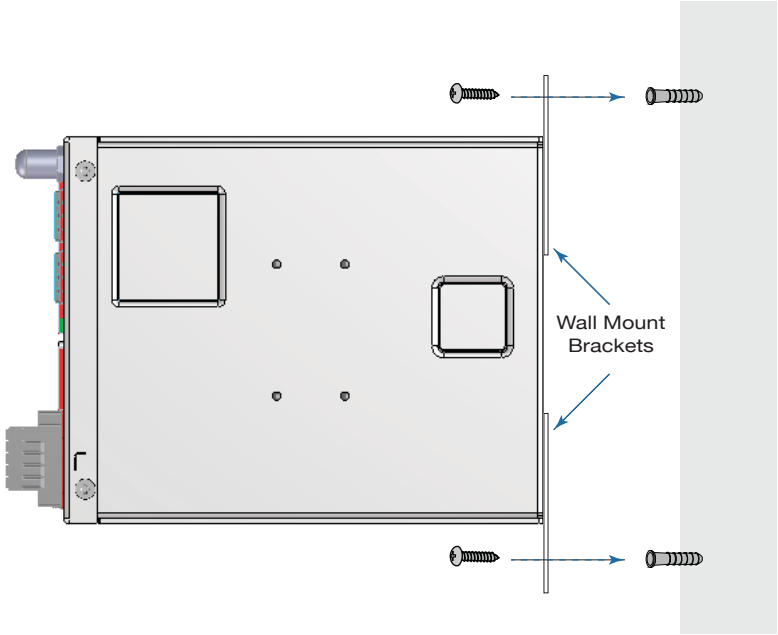


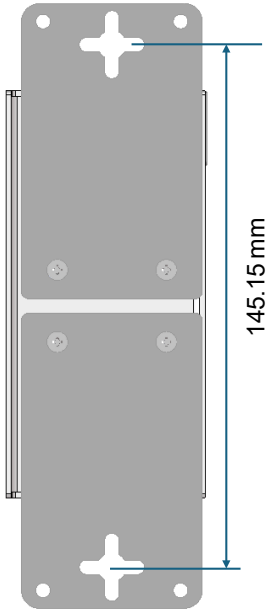


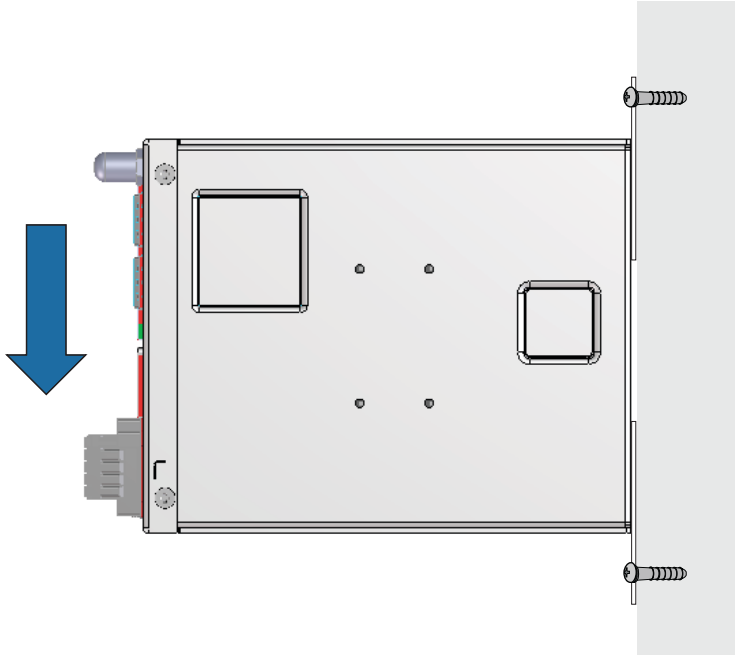

# Front FSR-108F

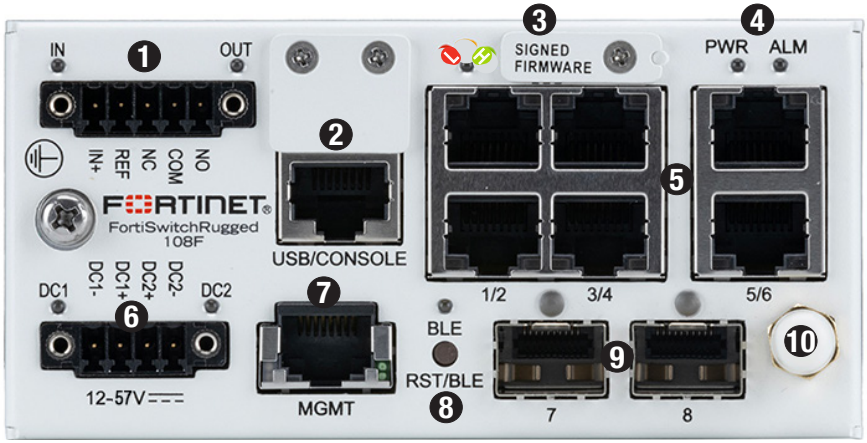


❶ **Digital I/O Connector**

**Alarm Input (IN)**
- Green: Alarm defined
- Red: Alarm detected
- Off: Alarm not defined

**Alarm Output (OUT)**
- Green: Alarm defined
- Flashing Red: Major alarm detected
- Red: Minor alarm detected
- Off: Alarm not defined

❷ **USB 2.0 Port (USB-A)** covered, for future use

**CONSOLE Port (RJ45)** CLI management

❸ **Signed Firmware** BIOS Security Level
Controlled by Signed Firmware Switch, see Admin Guide at https://docs.fortinet.com
- High: LED Green. Unsigned firmware boot blocked (default)
- Low: LED Red. Unsigned firmware boot allowed with a warning

❹ **PWR**
- Green: Power detected
- Off: Power not detected

**ALM**
- Amber: Alarm detected
- Off: Alarm not detected

❺ **Ports 1 to 6 (RJ45)**

**SPEED (Left LED)**
- Green: 1 Gbps
- Amber: 100 Mbps
- Off: 10 Mbps or not connected

**LINK/ACT (Right LED)**
- Green: Connected
- Flashing Green: Data activity
- Off: Not connected

❻ **Power Connectors (DC1 and DC2)** Alarm disabled by default
- Green: Power detected
- Red: Alarm is on; no power detected
- Off: No power detected

❼ **MGMT (RJ45)**

**LINK/ACT (Right LED)** Note: Left LED not in use
- Green: Connected
- Flashing Green: Data activity
- Off: Not connected

❽ **RST/BLE** Press and and hold (>10secs) for factory reset; BLE for future use

❾ **Ports 7 and 8 (SFP)**
- Green: 1 Gbps
- Flashing Green: Data activity
- Off: Not connected

❿ **BLE Antenna**

# Cautions and Warnings

### Environmental specifications

Ambient operating temperature: -40°C to 75°C

*Refer to specific Product Model Data Sheet for Environmental Specifications (Operating Temperature, Storage Temperature, Humidity, and Altitude)*

*Référez à la Fiche Technique de ce produit pour les caractéristiques environnementales (Température de fonctionnement, température de stockage, humidité et l'altitude).*

### Safety

**Warning:** Equipment intended for installation in Restricted Access Location.
**Avertissement:** Le matériel est conçu pour être installé dans un endroit où l'accès est restreint.

A skilled person must install the equipment.
L'équipement doit être installé par une personne qualifiée.

**Grounding —** To prevent damage to your equipment, connections that enter from outside the building should pass through a lightning / surge protector, and be properly grounded. Use an electrostatic discharge workstation (ESD) and/or wear an anti-static wrist strap while you work. In addition to the grounding terminal of the plug, on the back panel, there is another, separate terminal for earthing.

**Mise à la terre —** Pour éviter d'endommager votre matériel, assurez-vous que les branchements qui entrent à partir de l'extérieur du bâtiment passent par un parafoudre / parasurtenseur et sont correctement mis à la terre. Utilisez un poste de travail de décharge électrostatique (ESD) et / ou portez un bracelet anti-statique lorsque vous travaillez. Ce produit possède une borne de mise à la terre qui est prévu à l'arrière du produit, à ceci s'ajoute la mise à la terre de la prise.

This product has a separate protective earthing terminal provided on the back of the product in addition to the grounding terminal of the attachment plug. This separate protective earthing terminal must be permanently connected to earth with a green with yellow stripe conductor minimum size # 14 AWG and the connection is to be installed by a qualified service personnel.
Ce produit a une borne de mise à la terre séparé sur le dos de l'appareil, en plus de la borne de mise à la terre de la fiche de raccordement. Cette borne de mise à la terre séparée doit être connecté en permanence à la terre avec un conducteur vert avec la taille bande jaune de minimum # 14 AWG et la connexion doit être installé par un personnel qualifié.

# Regulatory Notices

### Federal Communication Commission (FCC) – USA

This device complies with Part 15 of the FCC Rules. Operation is subject to the following two conditions:
(1) this device may not cause harmful interference, and
(2) this device must accept any interference received; including interference that may cause undesired operation.

This equipment has been tested and found to comply with the limits for a Class A digital device, pursuant to Part 15 of the FCC Rules. These limits are designed to provide reasonable protection against harmful interference when the equipment is operated in a commercial environment. This equipment generates, uses, and can radiate radio frequency energy, and if it is not installed and used in accordance with the instruction manual, it may cause harmful interference to radio communications. Operation of this equipment in a residential area is likely to cause harmful interference, in which case the user will be required to correct the interference at his own expense.

**WARNING**: Any changes or modifications to this product not expressly approved by the party responsible for compliance could void the user's authority to operate the equipment.

This equipment complies with FCC radiation exposure limits set forth for an uncontrolled environment. This equipment should be installed and operated with minimum distance 20cm between the radiator and your body. This transmitter must not be co-located or operating in conjunction with any other antenna or transmitter.

### Industry Canada Equipment Standard for Digital Equipment (ICES) – Canada

CAN ICES-003 (A) / NMB-003 (A)

This digital apparatus does not exceed the Class A limits for radio noise emissions from digital apparatus set out in the Radio Interference Regula–tions of the Canadian Department of Communications.

Cet appareil numérique n'émet pas de bruits radioélectriques dépassant les limites applicables aux appareils numériques de la classe A prescrites dans le Règlement sur le brouillage radioélectrique édicte par le ministère des Communications du Canada.

### Innovation, Science and Economic Development (ISED) – Canada

This device contains licence-exempt transmitter(s)/receiver(s) that comply with Innovation, Science and Economic Development Canada's licence-exempt RSS(s). Operation is subject to the following two conditions:
1. This device may not cause interference.
2. This device must accept any interference, including interference that may cause undesired operation of the device.

L'émetteur/récepteur exempt de licence contenu dans le présent appareil est conforme aux CNR d'Innovation, Sciences et Développement économique Canada applicables aux appareils radio exempts de licence. L'exploitation est autorisée aux deux conditions suivantes:
1 .L'appareil ne doit pas produire de brouillage;
2 .L'appareil doit accepter tout brouillage radioélectrique subi, même si le brouillage est susceptible d'en compromettre le fonctionnement.

This equipment complies with ISED radiation exposure limits set forth for an uncontrolled environment. This equipment should be installed and operated with minimum distance 20cm between the radiator & your body.

Cet équipement est conforme aux limites d'exposition aux rayonnements ISED établies pour un environnement non contrôlé. Cet équipement doit être installé et utilisé avec un minimum de 20cm de distance entre la source de rayonnement et votre corps.

This radio transmitter (IC: ) has been approved by ISED to operate with the antenna types listed below with the maximum permissible gain and required antenna impedance for each antenna type indicated. Antenna types not included in this list, having a gain greater than the maximum gain indicated for that type, are strictly prohibited for use with this device.

Le présent émetteur radio (IC:) a été approuvé par ISED pour fonctionner avec les types d'antenne énumérés ci-dessous et ayant un gain admissible maximal et l'impédance requise pour chaque type d'antenne. Les types d'antenne non inclus dans cette liste, ou dont le gain est supérieur au gain maximal indiqué, sont strictement interdits pour l'exploitation de l'émetteur.

This device and it's antennas(s) must not be co-located or operating in conjunction with any other antenna or transmitter except in accordance with IC multi-transmitter product procedures.

Cet appareil et son antenne (s) ne doit pas être co-localisés ou fonctionnement en association avec une autre antenne ou transmetteur.

| Antenna type | Connector | Gain (dBi) | Network |
|---|---|---|---|
| Monopole | I-PEX | 1.33 | Bluetooth |

### European Conformity (CE) - EU

This is a Class A product. In a domestic environment, this product may cause radio interference, in which case the user may be required to take adequate measures.

CE

The product transmits within the frequency ranges and less than or equal to the power listed below:

| Standard | Frequency Range | Max. Transmit Power |
|---|---|---|
| Bluetooth | 2402–2480 MHz | 10 dBm (EIRP) |

This equipment should be installed and operated with minimum distance 20cm between the radiator & your body.

### Simplified EU Declaration of Conformity

This declaration is only valid for Fortinet products (including combinations of software, firmware and hardware) provided by Fortinet or Fortinet's authorized partners to the end-customer directly for use within the EU or countries that have implemented the EU Directives and/or spectrum regulation. Any Fortinet products not obtained directly from Fortinet or Fortinet's authorized partners may not comply with EU Directives and Fortinet makes no assurances for such products.

**Български**
Този продукт е в съответствие с Директива 2014/53/ЕС.

**Česky**
Tento produkt je v souladu se směrnicí 2014/53/EU.

**Dansk**
Dette produkt er i overensstemmelse med direktiv 2014/53/EU.

**Deutsch**
Dieses Produkt entspricht der Richtlinie 2014/53/EU.

**Eesti**
See toode vastab direktiivile 2014/53/EL.

**English**
This product is in compliance with Directive 2014/53/EU.

**Español**
Este producto cumple con la Directiva 2014/53/UE.

**Ελληνική**
Το προϊόν αυτό συμμορφώνεται με την Οδηγία 2014/53/ΕΕ.

**Français**
Ce produit est conforme à la Directive 2014/53/UE.

**Hrvatski**
Ovaj proizvod je u skladu s Direktivom 2014/53/EU.

**Italiano**
Questo prodotto è conforme alla Direttiva 2014/53/EU.

**Latviski**
Šis produkts atbilst Direktīvai 2014/53/ES.

**Lietuvių**
Šis gaminys atitinka direktyvą 2014/53/ES.

**Malti**
Dan il-prodott huwa konformi mad-Direttiva 2014/53/UE.

**Magyar**
Ez a termék megfelel a 2014/53/EU irányelvnek.

**Nederlands**
Dit product is in overeenstemming met Richtlijn 2014/53/EU.

**Norsk**
Dette produktet er i samsvar med direktiv 2014/53/EU.

**Polski**
Ten produkt jest zgodny z dyrektywą 2014/53/UE.

**Português**
Este produto está em conformidade com a Diretiva 2014/53/UE.

**Rumunski**
Acest produs este în conformitate cu Directiva 2014/53/UE.

**Slovensky**
Tento produkt je v súlade so smernicou 2014/53/EÚ.

**Slovensko**
Ta izdelek je v skladu z Direktivo 2014/53/EU.

**Suomi**
Tämä tuote on direktiivin 2014/53/EU mukainen.

**Svenska**
Denna produkt överensstämmer med direktiv 2014/53/EU.

Note: The full Declaration of Conformity for this product is available in the link below:
https://site.fortinet.com/ProductRegulatory/EU

**Waste Electrical and Electronic Equipment (WEEE)**
This symbol means that according to local laws and regulations your product and/or its battery shall be disposed of separately from household waste. When this product reaches its end of life, take it to a collection point designated by local authorities. Proper recycling of your product will protect human health and the environment.

### UK Conformity Assessed (UKCA) – United Kingdom

The product transmits within the frequency ranges and less than or equal to the power listed below:

| Standard | Frequency Range | Max. Transmit Power |
|---|---|---|
| Bluetooth | 2402–2480 MHz | 10 dBm (EIRP) |

This equipment should be installed and operated with minimum distance 20cm between the radiator & your body.

This product is in compliance with **Statutory Instrument 1206 Radio Equipment Regulations 2017**

The full Declaration of Conformity for this product is available in the link below:
**https://site.fortinet.com/ProductRegulatory/UK**

### Voluntary Control Council for Interference (VCCI) – Japan

この装置は、クラスＡ機器です。この装置を住宅環境で使用すると電波妨害を引き起こすことがあります。この場合には使用者が適切な対策を講ずるよう要求されることがありま

ＶＣＣＩ－Ａ

### Bureau of Standards Metrology and Inspection (BSMI) – Taiwan

The presence conditions of the restricted substance (BSMI RoHS table) are available at the link below:

限用物質含有情況表 (RoHS Table) 請到以下 網址下載：

https://www.fortinet.com/bsmi

警告： 為避免電磁干擾，本產品不應安裝或使用於住宅環境。

請仔細閱讀以下說明

本設備勿置於潮濕處。

連接至電源前，請先檢查電壓。

當設備不用時，請將所有電源線拔除，避免電壓不穩而造成傷害。

勿將任何液體識入設備中，避免線路短路。

基於安全理由，只有受到專業訓練的從業人員，才可以打開本設備。

請勿自行調整或修理已通電的設備，以確保您的安全。

如不小心受傷，請立刻找急救人員給予您適當的救護，千萬別因傷勢輕微而忽略自己的傷勢。

雷射設備非用戶維修設備，請與生產商聯繫維修事宜。

注意：要斷開電源，請將所有電源線從本機上拔下

英屬蓋曼群島商防特網股份有限公司台灣分公司

地址：台北市內湖區行愛路176號2樓

電話：(02) 27961666

### China

此为A级产品，在生活环境中，该产品可能会造成无线电干扰。这种情况下，可能需要用户对其采取切实可行的措施。

March 10, 2025

Copyright © 2025 Fortinet, Inc. All rights reserved. Fortinet®, FortiGate®, FortiCare® and FortiGuard®, and certain other marks are registered trademarks of Fortinet, Inc., and other Fortinet names herein may also be registered and/or common law trademarks of Fortinet. All other product or company names may be trademarks of their respective owners. Performance and other metrics contained herein were attained in internal lab tests under ideal conditions, and actual performance and other results may vary. Network variables, different network environments and other conditions may affect performance results. Nothing herein represents any binding commitment by Fortinet, and Fortinet disclaims all warranties, whether express or implied, except to the extent Fortinet enters a binding written contract, signed by Fortinet's SVP Legal and above, with a purchaser that expressly warrants that the identified product will perform according to certain expressly-identified performance metrics and, in such event, only the specific performance metrics expressly identified in such binding written contract shall be binding on Fortinet. For absolute clarity, any such warranty will be limited to performance in the same ideal conditions as in Fortinet's internal lab tests. Fortinet disclaims in full any covenants, representations, and guarantees pursuant hereto, whether express or implied. Fortinet reserves the right to change, modify, transfer, or otherwise revise this publication without notice, and the most current version of the publication shall be applicable.

For Product License Agreement / EULA and Warranty Terms, visit https://www.fortinet.com/content/dam/fortinet/assets/legal/EULA.pdf

FSR-108F-QSG-20250310