FortiAP 432F, 234F

QuickStart Guide

March 30, 2021

Copyright© 2021 Fortinet, Inc. All rights reserved. Fortinet®, FortiGate®, FortiCare® and FortiGuard®, and certain other marks are registered trademarks of Fortinet, Inc., in the U.S. and other jurisdictions, and other Fortinet names herein may also be registered and/or common law trademarks of Fortinet. All other product or company names may be trademarks of their respective owners. Performance and other metrics contained herein were attained in internal lab tests under ideal conditions, and actual performance and other results may vary. Network variables, different network environments and other conditions may affect performance results. Nothing herein represents any binding commitment by Fortinet, and Fortinet disclaims all warranties, whether express or implied, except to the extent Fortinet enters a binding written contract, signed by Fortinet's General Counsel, with a purchaser that expressly warrants that the identified product will perform according to certain expressly-identified performance metrics and, in such event, only the specific performance metrics expressly identified in such binding written contract shall be binding on Fortinet. For absolute clarity, any such warranty will be limited to performance in the same ideal conditions as in Fortinet's internal lab tests. In no event does Fortinet make any commitment related to future deliverables, features or development, and circumstances may change such that any forward-looking statements herein are not accurate. Fortinet disclaims in full any covenants, representations, and guarantees pursuant hereto, whether express or implied. Fortinet reserves the right to change, modify, transfer, or otherwise revise this publication without notice, and the most current version of the publication shall be applicable.

Product Registration

Thank you for purchasing a Fortinet Device.

Register to access:

- Cloud Management
- FortiGuard Updates
- Firmware Upgrades
- Technical Support
- Warranty Coverage

Please register your FortiGate:

Vous devez enregistrer le produir:

Debe registrar el producto:

登録のお願い:

请马上注册:

http://support.fortinet.com

Table of Contents

FAP-432F

Box Includes 6
Interfaces 8
LED Indicators 9
Wall Installation 10
Pole Installation 11
PoE Injector Installation 12
Waterproof Cabling 13
External Antenna Installation 14

FAP-234F

Box Includes 16
Interfaces 18
LED Indicators 19
Wall Installation 20
Pole Installation 21
PoE Injector Installation 22
Waterproof Cabling 23

SETUP

Device Setup 24
FortiAP Cloud 25
FortiAP Deployment 26

Box Includes

FortiAP 432F

QuickStart Guide

N-Type Omni Antennas

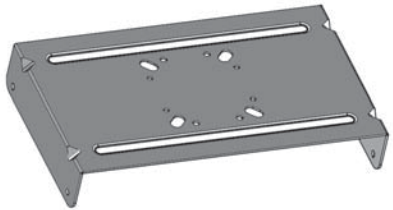

Mounting Bracket for External Antennas

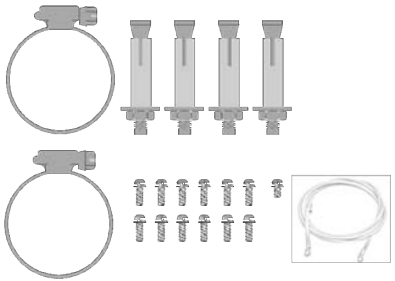

Mounting Kit
(pole straps, mounting bolts and screws, grounding cable and screw)

PoE Injector and AC Cord
(100V-220V AC input, 54V DC output)

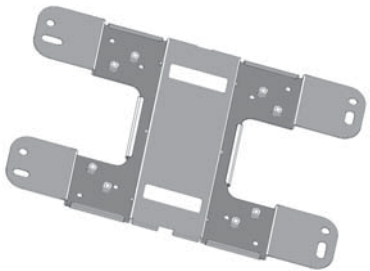

Wall Mount Bracket

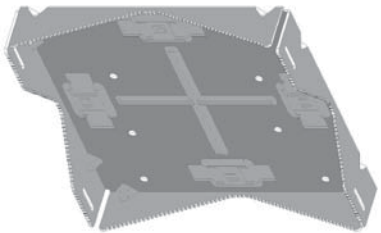

Pole Mount Bracket

Interfaces

1. LAN 1 2.5GE / PoE (RJ45)
2. LAN 2 1GE / PSE (RJ45)
3. RESET
4. CONSOLE (RJ45)
5. A1 WiFi Dual Band Antenna
6. WiFi Third Radio Antenna
7. A2 WiFi Dual Band Antenna
8. A3 WiFi Dual Band Antenna
9. BLE Antenna
10. A4 WiFi Dual Band Antenna

LED Indicators

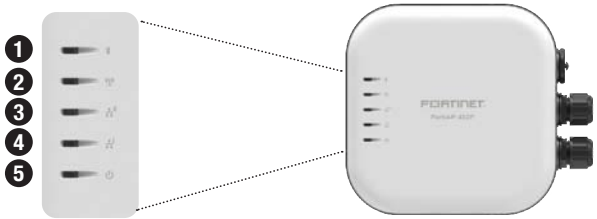

1 BLE, ZigBee & Scanning

- **Off**: BLE, ZigBee & Radio 3 are off
- **Amber**: Radio 3 is on
- **Blinking Amber**: Radio 3 is scanning
- **Blue**: BLE is on
- **Blinking Blue**: BLE is transmitting
- **Red**: ZigBee is on
- **Blinking Red**: ZigBee is transmitting
- **Green**: BLE, ZigBee & Radio 3 are on
- **Blinking Green**: BLE, ZigBee & Radio 3 are transmitting

3 LAN 2 (1Gbps 802.3at PSE RJ45)

- **Off**: Link is off
- **Green**: Link is on
- **Blinking Green**: Transmitting at 1Gbps
- **Blinking Amber** Transmitting at 100Mbps

2 WiFi

- **Off**: Radio 1 & 2 are off
- **Blue**: Radio 1 is on
- **Blinking Blue**: Radio 1 is transmitting
- **Amber**: Radio 2 is on
- **Blinking Amber**: Radio 2 is transmitting
- **Green**: Radio 1 & 2 are on
- **Blinking Green**: Radio 1 & 2 are transmitting

4 LAN 1 (2.5 Gbps 802.3at PoE RJ45)

- **Off**: Link is off
- **Green**: Link is on
- **Blinking Green**: Transmitting at 2.5Gbps
- **Blinking Amber** Transmitting at 100Mbps

5 Power

- **Off**: Device is off
- **Green**: Device is on
- **Blinking Green**: Booting up or upgrading
- **Amber**: Reserved for customizations

Wall Installation

Your device mounts on a wall using the provided wallmount bracket and screws.

1. Mark the location of the mounting bolts using the wallmount bracket
2. Drill holes and hammer the bolts into the drilled holes
3. Attach the wallmount bracket to the device using the provided mounting screws
4. Secure the device on the wall using the mounting bolts

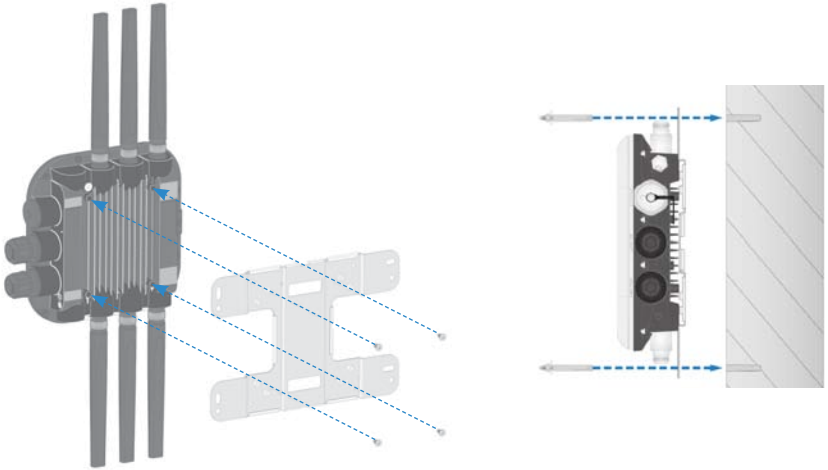

Pole Installation

Your device comes with a pole mount bracket, straps, and screws. You can mount the device to a pole vertically.

1. Attach the wallmount bracket, then the pole mount bracket to the device using the provided mounting screws
2. Loop the pole straps through the bracket slots, then around the pole
3. Tighten the straps

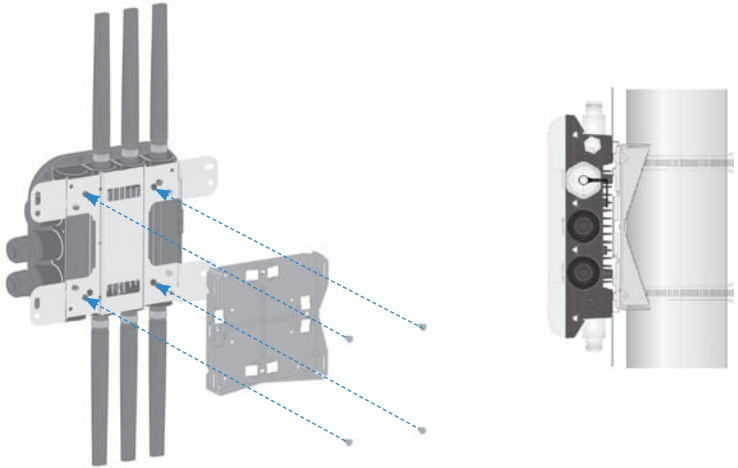

PoE Injector Installation

A PoE injector is provided to power the device.

1. Attach the supplied AC power cord to the PoE injector
2. Plug the power cord into a power outlet or UPS
3. Connect an Ethernet cable from the injector POE port to LAN 1 on the FortiAP
4. Use the LAN port on the injector to connect to a network device

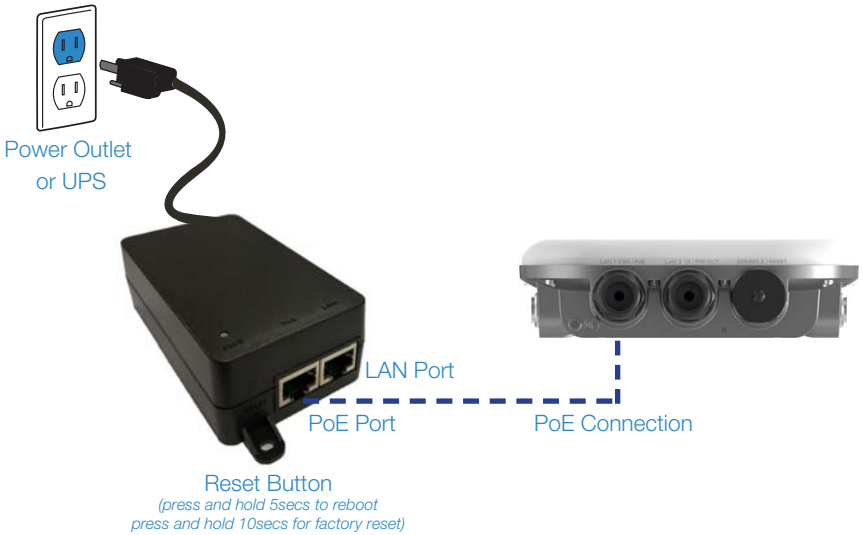

Waterproof Cabling

Your device also comes with IP67 rated Ethernet cable glands.

1. Unscrew the sealing nut from the panel connector and remove the seal and claw
2. Thread the RJ45 plug through the sealing nut, then the panel connector
3. Wrap the seal and claw around the cable between the sealing nut and connector
4. Insert the RJ45 plug into the port and screw the panel connector onto the threads
5. Slide the seal and claw along the cable into the panel connector
6. Threat the coupling ring onto the panel connector and tighten it

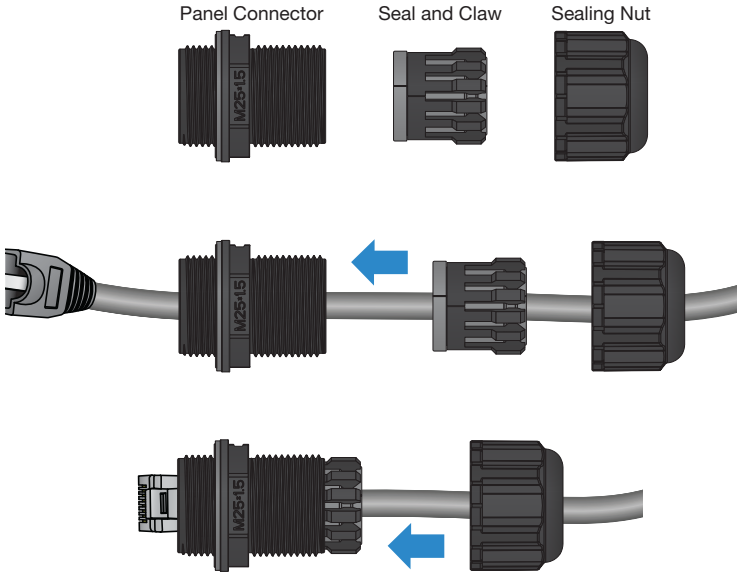

External Antenna Installation

Your device also comes with a mounting bracket for external sector antennas.

1. Attach the bracket to the device using the provided screws

WARNING: Please see the Safety and Warnings section at the end of this guide for antenna installation instructions.

Box Includes

FortiAP 234F

QuickStart Guide

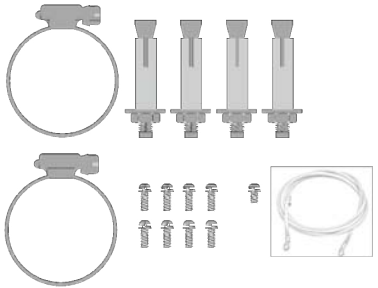

Mounting Kit
(pole straps, mounting bolts and screws, grounding cable and screws)

PoE Injector & AC Cord
(100V-220V AC input, 54V DC output)

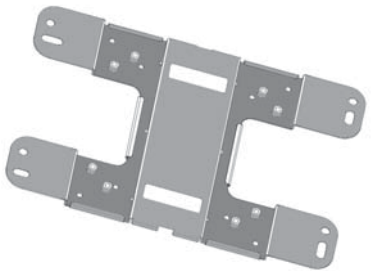

Wall Mount Bracket

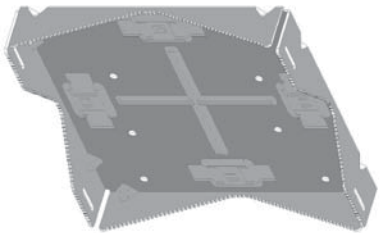

Pole Mount Bracket

Interfaces

1. CONSOLE (RJ45)
2. LAN 2 1GE / PoE (RJ45)
3. LAN1 1GE / PoE (RJ45)

LED Indicators

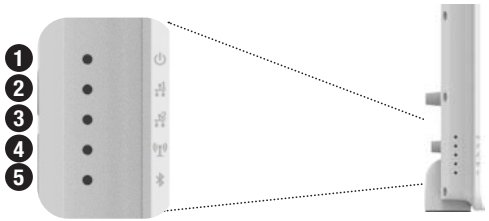

1 Power

- **Off**: Device is off
- **Green**: Device is on
- **Blinking Green**: Booting up or upgrading
- **Amber**: Reserved for customizations

2 LAN 1 (1Gbps 802.3at PoE RJ45)

- **Off**: Link is off
- **Green**: Link is on
- **Blinking Green**: Transmitting at 1Gbps
- **Blinking Amber**: Transmitting at 100Mbps

3 LAN 2 (1 Gbps 802.3at PoE RJ45)

- **Off**: Link is off
- **Green**: Link is on
- **Blinking Green**: Transmitting at 1Gbps
- **Blinking Amber**: Transmitting at 100Mbps

4 WiFi

- **Off**: Radio 1 & 2 are off
- **Blue**: Radio 1 is on
- **Blinking Blue**: Radio 1 is transmitting
- **Amber**: Radio 2 is on
- **Blinking Amber**: Radio 2 is transmitting
- **Green**: Radio 1 & 2 are on
- **Blinking Green**: Radio 1 & 2 are transmitting

5 BLE, ZigBee & Scanning

- **Off**: BLE, ZigBee & Radio 3 are off
- **Amber**: Radio 3 is on
- **Blinking Amber**: Radio 3 is scanning
- **Blue**: BLE is on
- **Blinking Blue**: BLE is transmitting
- **Red**: ZigBee is on
- **Blinking Red**: ZigBee is transmitting
- **Green**: BLE, ZigBee & Radio 3 are on
- **Blinking Green**: BLE, ZigBee & Radio 3 are transmitting

Wall Installation

Your device mounts on a wall using the provided wallmount bracket and screws.

1. Mark the location of the mounting bolts using the wallmount bracket
2. Drill holes and hammer the bolts into the drilled holes
3. Attach the wallmount bracket to the device using the provided mounting screws
4. Secure the device on the wall using the mounting bolts

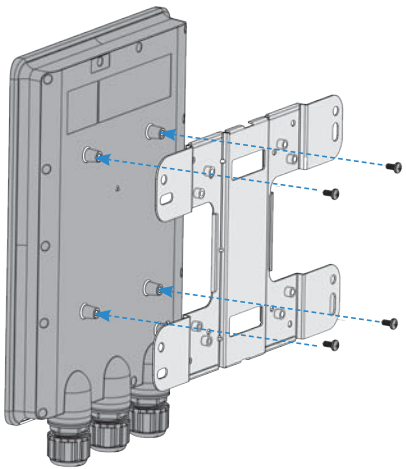

Pole Installation

Your device comes with a pole mount bracket, straps and screws. You can mount the device to a pole vertically.

1. Attach the wallmount bracket, then pole mount bracket to the device using the provided mounting screws
2. Loop the pole straps through the bracket slots, then around the pole
3. Tighten the straps

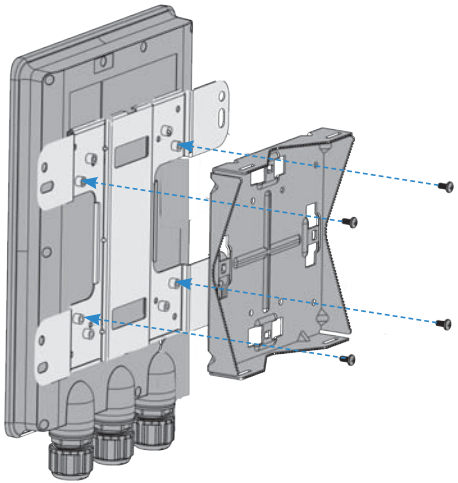

PoE Injector Installation

A PoE injector is provided to power the device.

1. Attach the supplied AC power cord to the PoE Injector
2. Plug the power cord into a power outlet or UPS
3. Connect an Ethernet cable from the injector PoE port to LAN 1 on the FortiAP
4. Use the LAN port on the injector to connect to a network device

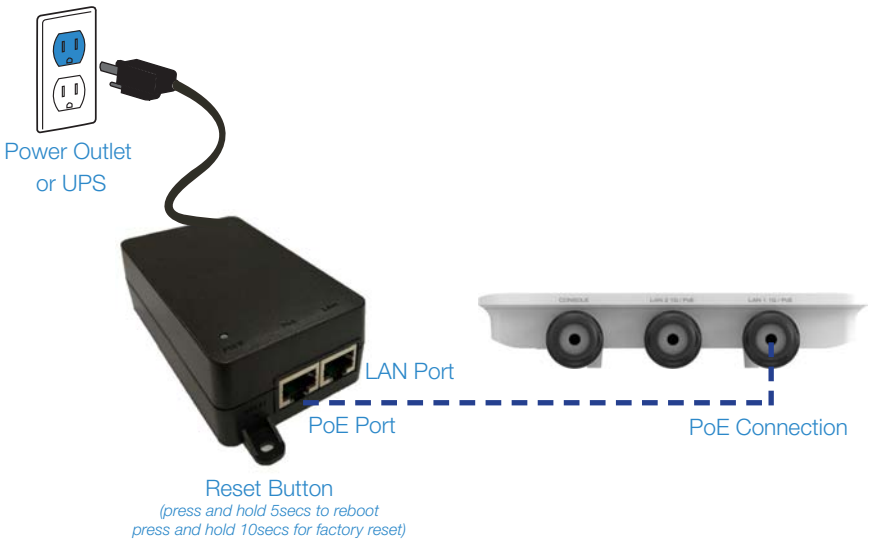

Waterproof Cabling

Your device also comes with IP67 rated Ethernet cable glands.

1. Unscrew the sealing nut from the panel connector and remove the seal and claw
2. Thread the RJ45 plug through the sealing nut, then the panel connector
3. Wrap the seal and claw around the cable between the sealing nut and connector
4. Insert the RJ45 plug into the port and screw the panel connector onto the threads
5. Slide the seal and claw along the cable into the panel connector
6. Threat the coupling ring onto the panel connector and tighten it

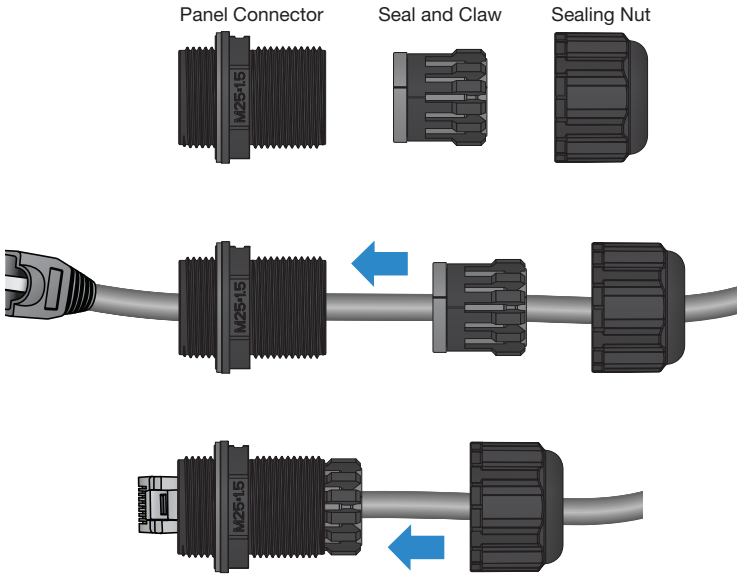

Device Setup

Set up your device locally or on the cloud. Choose one of the following options to complete your setup and configure your device.

Cloud Setup

FortiAP Cloud

FortiAPCloud is a cloud-based FortiAP management solution and log retention service. It provides centralized reporting, traffic analysis, configuration management, and log retention.

Local Setup

FortiGate Deployment

Your FortiAP can be preauthorized and configured using a FortiGate. You can also authorize your FortiAP after you have connected it to the same network.

If the FortiGate is not on the same network as the FortiAP, you can log directly into the AP and use FortiAP CLI configuration and diagnostics commands found on docs.fortinet.com to setup the information to find the controller.

FortiAP Cloud

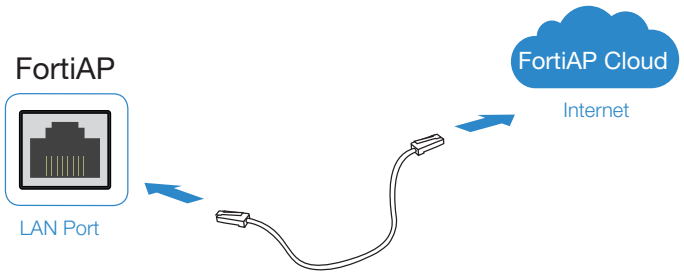

1. Log in to http://www.fortiapcloud.com using your FortiCloud credentials
2. Click Inventory, then click Import AP Key

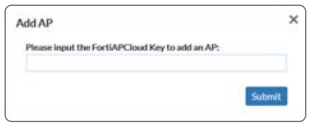

3. Input the Cloud Key located on the sticker on your device

Info: Refer to the "Access Point Configuration" section of the FortiWiFi and FortiAP Configuration Guide found at https://docs.fortinet.com/product/fortiap

FortiAP Deployment

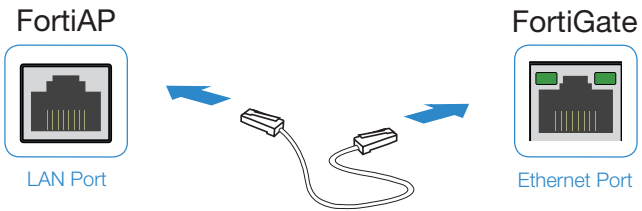

If the FortiGate is on the same network as the FortiAP:

1. Preauthorize your FortiAP device using your FortiGate
2. Plug the FortiAP into your local Ethernet connection
3. The FortiAP will self-configure

Or

1. Instead of preauthorizing, authorize the FortiAP device after you have connected the FortiAP to the network
2. Within two minutes of connecting the FortiAP to your FortiGate, the device will appear on the Managed FortiAP page in the GUI to authorize and assign a profile

If FortiGate is not on the same network as the FortiAP:

1. Log in to the FortiAP directly (IP address: 192.168.1.2) with username admin and no password, and specify the IP address of the controlling FortiGate
2. To specify the IP address of the controlling FortiGate:

   ```
   cfg -a AC_IPADDR_1=0.0.0.0
   cfg -c
   ```

   where **0.0.0.0** is the address of the FortiGate
3. The FortiAP device connects to the FortiGate, and then you can authorize the FortiAP

Cautions and Warnings

Environmental specifications

Ambient operating temperature: -30°C to 60°C.

Refer to specific Product Model Data Sheet for Environmental Specifications (Operating Temperature, Storage Temperature, Humidity, and Altitude).

Référez-vous à la Fiche Technique de ce produit pour les caractéristiques environnementales (Température de fonctionnement, température de stockage, humidité et altitude).

Safety

For models FAP-234F and FAP-432F
Warning: Equipment intended for installation in Restricted Access Location.
Avertissement: équipement destiné à être installé dans un endroit à accès restreint.

Caution: This equipment is to be used in a Network Environment 0 per IECTR 62101. This product is connected only to PoE networks without routing to the outside plant.

Attention: Ce matériel doit être utilisé dans un Environnement Réseau 0 par IECTR 62101. Ce produit est uniquement connecté aux réseaux PoE sans installation externe de routage.

FAP-432F is intended to be supplied by a Listed Direct Plug-In Power Unit marked LPS or Class 2 and rated 54 Vdc, 1.11A from PoE source.

Le FAP-432F est conçu pour être alimenté par un bloc d'alimentation enfichable direct répertorié marqué LPS ou Classe 2 et évalué à 54 Vcc, 1,11 A à partir de la source PoE.

FAP-234F is intended to be supplied by a Listed Direct Plug-In Power Unit marked LPS or Class 2 and rated 54 Vdc, 0.6A from PoE source.

Le FAP-234F est conçu pour être alimenté par un bloc d'alimentation enfichable direct répertorié marqué LPS ou Classe 2 et évalué à 54 Vcc, 0,6 A à partir de la source PoE.

Grounding — To prevent damage to your equipment, connections that enter from outside the building should pass through a lightning/surge protector, and be properly grounded. Use an electrostatic discharge workstation (ESD) and/or wear anti-static wrist strap while you work. In addition to the grounding terminal of the plug, on the back panel, there is another, separate terminal for earthing.

Mise à la terre — Pour éviter d'endommager votre équipement, les connexions qui entrent de l'extérieur du bâtiment doivent passer par un parafoudre / surtension et être correctement mises à la terre. Utilisez une station de travail à décharge électrostatique (ESD) et / ou portez un bracelet antistatique pendant que vous travaillez. En plus de la borne de mise à la terre de la fiche, sur le panneau arrière, il y a une autre borne séparée pour la mise à la terre.

Regulatory Notices

Federal Communication Commission (FCC) – USA

This device complies with Part 15 of FCC Rules. Operation is subject to the following two conditions:
(1) this device may not cause harmful interference, and
(2) this device must accept any interference received; including interference that may cause undesired operation.

This equipment has been tested and found to comply with the limits for a Class B digital device, pursuant to Part 15 of the FCC Rules. These limits are designed to provide reasonable protection against harmful interference in residential installation. This equipment generates, uses, and can radiate radio frequency energy, and if it is not installed and used in accordance with the instruction manual, it may cause harmful interference to radio communications. However, there is no guarantee that interference will not occur in a particular installation.

If this equipment does cause harmful interference to radio or television reception, which can be determined by turning the equipment off and on, the user is encouraged to try to correct the interference by one or more of the following measures:

Reorient or relocate the receiving antenna.
Increase the separation between the equipment and receiver.
Connect the equipment into an outlet on a circuit different from that to which the receiver is connected.
Consult the dealer or an experienced radio/TV technician for help.

WARNING: Any changes or modifications to this unit not expressly approved by the party responsible for compliance could void the user's authority to operate the equipment

For model FAP-234F
This equipment complies with FCC radiation exposure limits set forth for an uncontrolled environment. This equipment should be installed and operated with minimum distance 36cm between the radiator and your body. This transmitter must not be co-located or operating in conjunction with any other antenna or transmitter.

For model FAP-432F
This equipment complies with FCC radiation exposure limits set forth for an uncontrolled environment. This equipment should be installed and operated with minimum distance 48cm between the radiator and your body. This transmitter must not be co-located or operating in conjunction with any other antenna or transmitter.

This device meets all the other requirements specified in Part 15E, Section 15.407 of the FCC Rules.

Industry Canada Equipment Standard for Digital Equipment (ICES) – Canada

This Class B digital apparatus complies with Canadian ICES-003.

Cet appareil numérique de la classe B est conforme à la norme NMB-003 du Canada.

Innovation, Science and Economic Development (ISED) – Canada

This device contains licence-exempt transmitter(s)/receiver(s) that comply with Innovation, Science and Economic Development Canada's licence-exempt RSS(s). Operation is subject to the following two conditions:
1.This device may not cause interference.
2.This device must accept any interference, including interference that may cause undesired operation of the device.

L'émetteur/récepteur exempt de licence contenu dans le présent appareil est conforme aux CNR d'Innovation, Sciences et Développement économique Canada applicables aux appareils radio exempts de licence. L'exploitation est autorisée aux deux conditions suivantes:
1.L'appareil ne doit pas produire de brouillage;
2.L'appareil doit accepter tout brouillage radioélectrique subi, même si le brouillage est susceptible d'en compromettre le fonctionnement.

For product available in the USA/Canada market, only channel 1~11 can be operated. Selection of other channels is not possible.

Pour les produits disponibles aux États-Unis et au Canada, seuls les canaux 1 à 11 peuvent être exploités en bande ISM 2.4GHz. La sélection d'autres canaux n'est pas possible.

For model FAP-234F
This equipment complies with ISED radiation exposure limits set forth for an uncontrolled environment. This equipment should be installed and operated with minimum distance 43cm between the radiator & your body.

Cet équipement est conforme aux limites d'exposition aux rayonnements ISED établies pour un environnement non contrôlé. Cet équipement doit être installé et utilisé avec un minimum de 43cm de distance entre la source de rayonnement et votre corps.

For model FAP-432F
This equipment complies with ISED radiation exposure limits set forth for an uncontrolled environment. This equipment should be installed and operated with minimum distance 56cm between the radiator & your body.

Cet équipement est conforme aux limites d'exposition aux rayonnements ISED établies pour un environnement non contrôlé. Cet équipement doit être installé et utilisé avec un minimum de 56cm de distance entre la source de rayonnement et votre corps.

The maximum antenna gain permitted for devices in the band 5725-5850 MHz shall be such that the equipment still complies with the e.i.r.p. limits specified for point-to-point and non-point-to-point operation as appropriate.

Le gain maximal d'antenne permis (pour les dispositifs utilisant la bande 5725-5850 MHz) doit se conformer à la limite de p.i.r.e. spécifiée pour l'exploitation point à point et non point à point, selon le cas.

Caution: The device for the band 5150-5250 MHz is only for indoor usage to reduce potential for harmful interference to co-channel mobile satellite systems.

Attention: Le dispositif utilisé sur la bande 5150-5250 MHz est réservé à un usage intérieur afin de réduire l'interférence nuisible potentielle aux systèmes mobiles par satellite sur le même canal.

(iii) where applicable, antenna type(s), antenna models(s), and worst-case tilt angle(s) necessary to remain compliant with the e.i.r.p. elevation mask requirement set forth in section 6.2.2.3 shall be clearly indicated.

(iii) lorsqu'il y a lieu, les types d'antennes (s'il y en a plusieurs), les numéros de modèle de l'antenne et les pires angles d'inclinaison nécessaires pour rester conforme à l'exigence de la p.i.r.e. applicable au masque d'élévation, énoncée à la section 6.2.2.3, doivent être clairement indiqués.

This radio transmitter (IC: 7280B-4617T111266 / Model: FAP-432F), has been approved by ISED to operate with the antenna type listed below with maximum permissible gain indicated. Antenna types not included in this list, having a gain greater than the maximum gain indicated for that type, are strictly prohibited for use with this device.

Le présent émetteur radio (IC: 7280B-4617T111266 / Model: FAP-432F) a été approuvé par ISED pour fonctionner avec les types d'antenne énumérés ci-dessous et ayant un gain admissible maximal. Les types d'antenne non inclus dans cette liste, et dont le gain est supérieur au gain maximal indiqué, sont strictement interdits pour l'exploitation de l'émetteur.

This device has been designed to operate with an antenna having a maximum gain of 5.5dBi for 2.4GHz and 7.2dBi for 5GHz. Antenna having a higher gain is strictly prohibited per regulations of ISED. The required antenna impedance is 50 ohms.

Ce dispositif a été conçu pour fonctionner avec une antenne ayant un gain maximal de 5.5dBi pour 2,4 GHz et 7.2dBi pour 5GHz. Une antenne ayant un gain supérieur sont strictement interdites par la réglementation d'ISED. L'impédance d'antenne requise est de 50 ohms.

This radio transmitter (IC: 7280B-3617T01066/ Model: FAP-234F), has been approved by ISED to operate with the antenna type listed below with maximum permissible gain indicated. Antenna types not included in this list, having a gain greater than the maximum gain indicated for that type, are strictly prohibited for use with this device.

Le présent émetteur radio (IC:7280B-3617T01066 / Model: FAP-234F) a été approuvé par ISED pour fonctionner avec les types d'antenne énumérés ci-dessous et ayant un gain admissible maximal. Les types d'antenne non inclus dans cette liste, et dont le gain est supérieur au gain maximal indiqué, sont strictement interdits pour l'exploitation de l'émetteur.

This device and it's antennas(s) must not be co-located or operating in conjunction with any other antenna or transmitter except in accordance with IC multi-transmitter product procedures.

Cet appareil et ses antennes ne doivent pas être co-localisés ou mis en fonctionnement en association avec une autre antenne ou transmetteur.

For model FAP-234F

Antenna Type	Patch					
Antenna Connnector	IPEX					
Antenna No.	**Gain (dBi)**					
	2400MHz	**2450MHz**	**2500MHz**	**UNII-1 & UNII-2A**	**UNII-2C**	**UNII-3**
Ant1	9.47	10.20	10.16	–	–	–
Ant2	9.24	10.25	9.73	–	–	–
Ant3	–	–	–	9.75	9.94	10.02
Ant4	–	–	–	9.81	10.17	10.02
Antenna Type	DIPole					
Antenna Connnector	IPEX					
Scanning	3.38	3.38	3.84	4.92	4.54	4.80
BLE/Zigbee	4.25	4.99	4.15	–	–	–

For model FAP-432F

Antenna Type	Dipole					
Antenna Connnector	N-Type					
Gain (dBi)	**Frequency**					
	2400MHz	**2450MHz**	**2500MHz**	**UNII-1 & UNII-2A**	**UNII-2C**	**UNII-3**
Wi-Fi/ Scanning	5.1	5.0	5.5	6.7	7.2	7.0
BLE/Zigbee	4.1	4.2	4.5	–	–	–

Professional Installation Instructions

1. Installation Personnel
This product is designed for specific application and needs to be installed by qualified personnel who has RF and related rule knowledge. The general user shall not attempt to install or change the settings.

2. Installation Location

For Model FAP-234F
The product shall be installed at a location where the radiating antenna can be kept 36/43 cm from nearby person in normal operation condition to meet regulatory RF exposure requirement.

For Model FAP-432F
The product shall be installed at a location where the radiating antenna can be kept 48/56 cm from nearby person in normal operation condition to meet regulatory RF exposure requirement.

3. External Antenna
Use only the antenna which have been approved by the applicant. The non-approved antenna(s) may produce unwanted spurious or excessive RF transmitting power which may lead to the violation of FCC/IC limit and is prohibited.

4. Installation Procedure
Please refer to user's manual for the detail.

5. Warning
Please carefully select the installation position and make sure that the final output power does not exceed the limit set forth in relevant rules. The violation of the rule could lead to serious federal penalty.

Instructions d'installation professionnelle

1. Installation
Ce produit est destine a un usage specifique et doit etre installe par un personnel qualifie maitrisant les radiofrequences et les regles s'y rapportant. L'installation et les reglages ne doivent pas etre modifies par l'utilisateur final.

2. Emplacement d'installation

Pour le modèle FAP-234F
En usage normal, afin de respecter les exigences reglementaires concernant l'exposition aux radiofrequences, ce produit doit etre installe de facon a respecter une distance de 36/43 cm entre l'antenne emettrice et les personnes.

Pour le modèle FAP-432F
En usage normal, afin de respecter les exigences reglementaires concernant l'exposition aux radiofrequences, ce produit doit etre installe de facon a respecter une distance de 48/56 cm entre l'antenne emettrice et les personnes.

3. Antenn externe
Utiliser uniiquement les antennes approuvees par le fabricant. L'utilisation d'autres antennes peut conduire a un niveau de rayonnement essentiel ou non essentiel depassant les niveaux limites definis par FCC/IC, ce qui est interdit.

4. Procedure d'installation
Consulter le manuel d'utilisation.

5. Avertissement
Choisir avec soin la position d'installation et s'assurer que la puissance de sortie ne depasse pas les limites en vigueur. La violation de cette regle peut conduire a de serieuses penalites federales.

European Conformity (CE) – EU

This is a Class B product. In a domestic environment, this product may cause radio interference, in which case the user may be required to take adequate measures.

The product transmits within the frequency ranges and less than or equal to the power listed below:
2402–2480 MHz less than 20 dBm
2405–2480 MHz less than 20 dBm
2412-2472 MHz less than 20 dBm
5180-5240 MHz less than 23 dBm
5260–5320 MHz less than 23 dBm *
5500–5700 MHz less than 30 dBm *

Note: * Only with DFS bands certification.

This equipment should be installed and operated with minimum distance 20cm between the radiator and your body.

Simplified EU Declaration of Conformity

This declaration is only valid for Fortinet products (including, combinations of software, firmware and hardware) provided by Fortinet or Fortinet's authorized partners to the end customer directly for use within the EU or countries that have implemented the EU Directives and/or spectrum regulation. Any Fortinet products not obtained directly from Fortinet or Fortinet's authorized partners may not comply with EU Directives and Fortinet makes no assurances for such products.

Български
Този продукт е в съответствие с Директива 2014/53/ЕС.

Česky
Tento produkt je v souladu se směrnicí 2014/53/EU.

Dansk
Dette produkt er i overensstemmelse med direktiv 2014/53/EU.

Deutsch
Dieses Produkt entspricht der Richtlinie 2014/53/EU.

Eesti
See toode vastab direktiivile 2014/53/EL.

English
This product is in compliance with Directive 2014/53/EU.

Español
Este producto cumple con la Directiva 2014/53/UE.

Ελληνική
Το προϊόν αυτό συμμορφώνεται με την Οδηγία 2014/53/ΕΕ.

Français
Ce produit est conforme à la Directive 2014/53/UE.

Hrvatski
Ovaj proizvod je u skladu s Direktivom 2014/53/EU.

Italiano
Questo prodotto è conforme alla Direttiva 2014/53/EU.

Latviski
Šis produkts atbilst Direktīvai 2014/53/EU.

Lietuvių
Šis gaminys atitinka direktyvą 2014/53/ES.

Malti
Dan il-prodott huwa konformi mad-Direttiva 2014/53/UE.

Magyar
Ez za termék megfelel a 2014/53/EU irányelvnek.

Nederlands
Dit product is in overeenstemming met Richtlijn 2014/53/EU.

Norsk
Dette produktet er i samsvar med direktiv 2014/53/EU.

Polski
Ten produkt jest zgodny z dyrektywą 2014/53/UE.

Português
Este produto está em conformidade com a Diretiva 2014/53/UE.

Rumunski
Acest produs este în conformitate cu Directiva 2014/53/UE.

Slovensky
Tento produkt je v súlade so smernicou 2014/53/EÚ.

Slovensko
Ta izdelek je v skladu z Direktivo 2014/53/EU.

Suomi
Tämä tuote on direktiivin 2014/53/EU mukainen.

Svenska
Denna produkt överensstämmer med direktiv 2014/53/EU.

Note: The full declaration of conformity for this product is available at the link below:
https://site.fortinet.com/ProductRegulatory/EU

Voluntary Control Council for Interference (VCCI) – Japan

この装置は、クラスＢ機器です。この装置は、住宅環境で使用することを目的としていますが、この装置がラジオやテレビジョン受信機に近接して使用されると、受信障害を引き起こすことがあります。
取扱説明書に従って正しい取り扱いをして下さい。

ＶＣＣＩ－Ｂ

Fortinet Product License Agreement / EULA and Warranty Terms

Product License Agreement

The parties to this agreement are you (the end-customer) and Fortinet, Inc. ("Fortinet"). CAREFULLY READ THE FOLLOWING LEGAL AGREEMENT (THE OR THIS "AGREEMENT" OR "EULA"). USE OR INSTALLATION OF FORTINET PRODUCT(S) AND ANY UPDATES THERETO, INCLUDING HARDWARE APPLIANCE PRODUCTS, SOFTWARE AND FIRMWARE INCLUDED THEREIN BY FORTINET, AND STAND-ALONE SOFTWARE PRODUCTS SOLD BY FORTINET (TOGETHER, THE "PRODUCTS") CONSTITUTES ACCEPTANCE BY YOU OF THE TERMS IN THIS AGREEMENT, AS AMENDED OR UPDATED FROM TIME TO TIME IN FORTINET'S DISCRETION BY FORTINET PUBLISHING AN AMENDED OR UPDATED VERSION. FORTINET SHALL NOT BE BOUND BY ANY ADDITIONAL AND/OR CONFLICTING PROVISIONS IN ANY ORDER, RELEASE, ACCEPTANCE OR OTHER WRITTEN CORRESPONDENCE OR OTHER WRITTEN OR VERBAL COMMUNICATION UNLESS EXPRESSLY AGREED TO IN A WRITING SIGNED BY THE GENERAL COUNSEL OF FORTINET. IF YOU DO NOT AGREE TO ALL OF THE TERMS OF THIS AGREEMENT, DO NOT START THE INSTALLATION PROCESS OR USE THE PRODUCTS. IF YOU DO NOT AGREE TO THE TERMS OF THIS AGREEMENT, YOU SHOULD IMMEDIATELY, AND IN NO EVENT LATER THAN FIVE (5) CALENDAR DAYS AFTER YOUR RECEIPT OF THE PRODUCT, IMMEDIATELY NOTIFY FORTINET LEGAL LEGAL@ FORTINET.COM OF REQUESTED EULA CHANGES.

1. License Grant.

This is a license agreement between you and Fortinet, not a sales agreement. The term "Software", as used throughout this Agreement, includes all Fortinet and third party firmware and software provided to you with, or incorporated into, Fortinet appliances and any stand-alone software provided to you by Fortinet, with the exception of any open source software contained in Fortinet's Products which is discussed in detail in section 15 below, and the term "Software" includes any accompanying documentation, any updates and enhancements of the software or firmware provided to you by Fortinet, at its option. Fortinet grants to you a non-transferable (except as provided in section 5 ("Transfer") and section 15 ("Open Source Software") below), non-exclusive, revocable (in the event of your failure to comply with these terms, in the event of termination, or in the event Fortinet is not properly paid for the applicable Product) license to use the Software solely for your internal business purposes (provided, if (a) agreed by Fortinet in writing, (b) you are authorized by Fortinet in writing to provide managed service provider services ("MSSP") to your end-customers, and (c) you pay for an MSSP license, then you may use the Software and/or Software embedded in Fortinet Hardware to provide those services, subject to the other restrictions in this Agreement), in accordance with the terms set forth in this Agreement and subject to any further restrictions in Fortinet documentation (including license term restrictions), and solely on the Fortinet appliance, or, in the case of blades, CPUs, platform, devices or databases, on the single blade, CPU, platform, device or database on which Fortinet installed the Software, or, for stand-alone Software, solely on a single computer running a validly-licensed copy of the operating system for which the Software was designed unless and except set forth in the published documentation otherwise.. For clarity, notwithstanding anything to the contrary, all licenses of Software to be installed on blades, CPUs, platforms, devices or databases are licensed per blade, solely for one blade and not for multiple blades that may be installed in a chassis, per CPU, per platform, per device, or per database basis, up to the blade, CPU, platform, device, database number defined in the license and as applicable and in accordance with the documentation. The Software is "in use" on any appliances, blades, CPUs, platforms, devices, or databases when it is loaded into temporary memory (i.e. RAM), accessed, downloaded, installed, or used on an appliance, blade, CPU, platform, device, or database. You agree that, except for the limited, specific license rights granted in this section 1, you receive no license rights to the Software.

2. Limitation on Use.

You may not attempt to, and, if you are a corporation, you are responsible to prevent your employees and contractors from attempting to: (a) modify, translate, reverse engineer, decompile, disassemble, create derivative works based on, sublicense, or distribute the Software; (b) rent or lease any rights in the Software in any form to any third party or make the Software available or accessible to third parties in any other manner (except as expressly permitted for MSSP partners); (c) transfer assign or sublicense right to any other person or entity (except as provided in section 5): (d) remove any proprietary notice, labels, or marks on the Software, Products, and containers; (e) use the Software to determine, or disclose the results of, any benchmarking or performance measurements; (f) interfere with a platform for use of the Software; (g) use the Software on a device not owned and controlled by you; (h) use automated means to access online portions of the platform for the Software; or, (i) use the Software for third-party training, commercial time-sharing or service bureau use or use the Software to provide services to third parties, except as expressly set forth in this Agreement.

3. Proprietary Rights.

All rights (including copyrights, trade secret, patent and other intellectual property rights), title, interest in and to the Software and any Product, and any copy thereof remain with Fortinet. You acknowledge that no title or other intellectual property rights in the Software or other Products is transferred to you and you will not acquire any rights to the Software or other Products except for the specific limited license as expressly set forth in section 1 ("License Grant") above. You expressly agree and acknowledge that Fortinet owns, retains, and shall retain all intellectual property rights in and to, and you have no intellectual property rights in and to, the Products and the Software other than the License Grant. You agree to keep confidential all Fortinet confidential information and only to use such information for the purposes for which Fortinet disclosed it.

4. Term and Termination.

The term of the license is the shorter of (a) the term as set forth in the ordering documents, other Fortinet documentation, or per Fortinet practices or policies (such as with evaluation or beta licenses or subscription or other term licenses) and (b) for the duration of Fortinet's copyright in the Software. Fortinet may terminate this Agreement, and the licenses and other rights herein, immediately without notice if you breach or fail to comply with any of the terms and conditions of this Agreement or for other reasons as stated in Fortinet's other documentation. You agree that, upon such termination, you will cease using the Software and any Product and either destroy all copies of the Fortinet documentation or return all materials to Fortinet.

5. Transfer.

If you are a Fortinet contracted and authorized reseller or distributor of Products, you may transfer (not rent or lease unless specifically agreed to in writing by Fortinet) the Software to one end user on a permanent basis, provided that: (i) you ensure that your customer and the end user receives a copy of this Agreement, is bound by its terms and conditions, and, by selling the Product or Software, you hereby agree to enforce the terms in this Agreement against such end user, (ii) you at all times comply with all applicable United States export control laws and regulations, and (iii) you agree to refund any fees paid to you by an end user who purchased Product(s) from you but does not agree to the terms contained in this Agreement and therefore wishes to return the Product(s) as provided for in this Agreement. Further, if you are a non-authorized reseller of Products and Services, you are not authorized to sell Product(s), Software or Services, but, regardless, by selling Product(s), Software or Services, you hereby agree you are bound by the restrictions and obligations herein and are bound to: (i) ensure that your customer and the end user receive a copy of this Agreement and are bound in full by all restrictions and obligations herein (ii) enforce the restrictions and obligations in this Agreement against such customer and/or end user, (iii) comply with all applicable United States export control laws and regulations and all other applicable laws, and (iv) refund any fees paid to you by a customer and/or end user who purchased Product(s) from you but does not agree to the restrictions and obligations contained in this Agreement and therefore wishes to return the Product(s) as provided for in this Agreement. Notwithstanding anything to the contrary, distributors, resellers and other Fortinet partners (a) are not agents of Fortinet and (b) are not authorized to bind Fortinet in any way. Fortinet's license, warranty, and support is only available for Products that you purchased directly from an authorized Fortinet channel partner. Products not purchased from an authorized Fortinet channel partner are not eligible, will not be supported, and may be blocked from registration

6. Limited Warranty.

Fortinet provides this limited warranty for its product only to the single end-user person or entity that originally purchased the Product from Fortinet or its authorized reseller or distributor and paid for such Product. The warranty is only valid for Products which are properly registered on Fortinet's Support Website, https://support.fortinet.com, or such other website as provided by Fortinet, or for which the warranty otherwise starts according to Fortinet's policies, and any support is only valid for products properly purchased

through authorized distributors and resellers. The warranty periods discussed below will start according to Fortinet's policies posted at http://www.fortinet.com/aboutus/legal.html or such other website as provided by Fortinet. It is the Fortinet distributor's and reseller's responsibility to make clear to the end user the date the product was originally shipped from Fortinet, and it is the end user's responsibility to understand the original ship date from the party from which the end user purchased the product. All warranty claims must be submitted in writing to Fortinet before the expiration of the warranty term or such claims are waived in full. Fortinet provides no warranty for any beta, donation or evaluation Products. Fortinet warrants that the hardware portion of the Products ("Hardware") will be free from material defects in workmanship as compared to the functional specifications for the period set forth as follows and applicable to the Product type ("Hardware Warranty Period"): (a) a three hundred sixty-five (365) day limited warranty for the Hardware products; (b) for FortiAP, the warranty herein shall last from the start of the warranty period as discussed above until five (5) years following the product announced end-of-life date Hardware; (c) for FortiSwitch Hardware appliance products other than the FortiSwitch-5000 series, the warranty herein shall last from the start of the warranty period as discussed above until five (5) years following the product announced end-of-life date Hardware. Fortinet's sole obligation shall be to repair or offer replacement Hardware for the defective Hardware at no charge to the original owner. This obligation is exclusive of transport fees, labor, de-installation, installation, reconfiguration, or return shipment and handling fees and costs, and Fortinet shall have no obligation related thereto. Such repair or replacement will be rendered by Fortinet at an authorized Fortinet service facility as determined by Fortinet. The replacement Hardware need not be new or of an identical make, model, or part; Fortinet may, in its discretion, replace the defective Hardware (or any part thereof) with any reconditioned Product that Fortinet reasonably determines is substantially equivalent (or superior) in all material respects to the defective Hardware. The Hardware Warranty Period for the repaired or replacement Hardware shall be for the greater of the remaining Hardware Warranty Period or ninety days from the delivery of the repaired or replacement Hardware. If Fortinet determines in its reasonable discretion that a material defect is incapable of correction or that it is not practical to repair or replace defective Hardware, the price paid by the original purchaser for the defective Hardware will be refunded by Fortinet upon return to Fortinet of the defective Hardware. All Hardware (or part thereof) that is replaced by Fortinet, or for which the purchase price is refunded, shall become the property of Fortinet upon replacement or refund. Fortinet warrants that Software as initially shipped by Fortinet will substantially conform to Fortinet's then-current functional specifications for the Software, as set forth in the applicable documentation for a period of ninety (90) days ("Software Warranty Period"), if the Software is properly installed on approved Hardware and operated as contemplated in its documentation. Fortinet's sole obligation shall be to repair or offer replacement Software for the non-conforming Software with software that substantially conforms to Fortinet's functional specifications. This obligation is exclusive of transport fees, labor, de-installation, installation, reconfiguration, or return shipment and handling fees and costs, and Fortinet shall have no obligation related thereto. Except as otherwise agreed by Fortinet in writing, the warranty replacement Software is provided only to the original licensee, and is subject to the terms and conditions of the license granted by Fortinet for the Software. The Software Warranty Period shall extend for an additional ninety (90) days after any warranty replacement software is delivered. If Fortinet determines in its reasonable discretion that a material non-conformance is incapable of correction or that it is not practical to repair or replace the non-conforming Software, the price paid by the original licensee for the non-conforming Software will be refunded by Fortinet; provided that the non-conforming Software (and all copies thereof) is first returned to Fortinet. The license granted respecting any Software for which a refund is given automatically terminates immediately upon refund. For purpose of the above hardware and software warranties, the term "functional specifications" means solely those specifications authorized and published by Fortinet that expressly state in such specifications that they are the functional specifications referred to in this section 6 of this Agreement, and, in the event no such specifications are provided to you with the Software or Hardware, there shall be no warranty on such Software.

7. Disclaimer of Other Warranties and Restrictions.

EXCEPT FOR THE LIMITED WARRANTY SPECIFIED IN SECTION 6 ABOVE, THE PRODUCT AND SOFTWARE ARE PROVIDED "AS-IS" WITHOUT ANY WARRANTY OF ANY KIND INCLUDING, WITHOUT LIMITATION, ANY IMPLIED WARRANTY, IMPLIED OR EXPRESS WARRANTY OF MERCHANTABILITY, OR WARRANTY FOR FITNESS FOR A PARTICULAR PURPOSE AND NON-INFRINGEMENT. IF ANY IMPLIED WARRANTY CANNOT BE DISCLAIMED IN ANY TERRITORY WHERE A PRODUCT IS SOLD, THE DURATION OF SUCH IMPLIED WARRANTY SHALL BE LIMITED TO NINETY (90) DAYS FROM THE DATE OF ORIGINAL SHIPMENT FROM FORTINET. EXCEPT AS EXPRESSLY COVERED UNDER THE LIMITED WARRANTY PROVIDED HEREIN, THE ENTIRE RISK AS TO THE QUALITY, SELECTION AND PERFORMANCE OF THE PRODUCT IS WITH THE PURCHASER OF THE PRODUCT. NOTWITHSTANDING ANYTHING TO THE CONTRARY, THE HARDWARE WARRANTY PERIOD DISCUSSED ABOVE DOES NOT APPLY TO CERTAIN FORTINET PRODUCTS, INCLUDING FORTITOKEN WHICH HAS A 365 DAY WARRANTY FROM THE DATE OF SHIPMENT FROM FORTINET'S FACILITIES, AND THE SOFTWARE WARRANTY DOES NOT APPLY TO CERTAIN FORTINET PRODUCTS. YOU HEREBY ACKNOWLEDGE AND AGREE THAT NO VENDOR CAN ASSURE COMPLETE SECURITY AND NOTHING HEREIN OR ELSEWHERE SHALL BE DEEMED TO IMPLY A SECURITY GUARANTEE OR ASSURANCE, AND FORTINET DISLAIMS LIABILITY REGARDING YOUR WEB BROWSER'S REQUIREMENTS OR ANY THIRD PARTY DEVICE OR APPLIANCE USED TO OPERATE THE SOFTWARE.

The warranty in Section 6 above does not apply if the Software, Product or any other equipment upon which the Software is authorized to be used (a) has been altered, except by Fortinet or its authorized representative, (b) has not been installed, operated, repaired, updated to the latest version, or maintained in accordance with instructions supplied by Fortinet, (c) has been subjected to abnormal physical or electrical stress, misuse, negligence, or accident; (d) is licensed for beta, evaluation, donation, testing or demonstration purposes or for which Fortinet does not charge a purchase price or license fee; or (e) is procured from a non-authorized reseller or non-authorized distributor. In the case of beta, testing, evaluation, donation or free Software or Product, the end user acknowledges and agrees that such Software or Product may contain bugs or errors and could cause system failures, data loss and other issues, and the end user agrees that such Software or Product is provided "as-is" without any warranty whatsoever, and Fortinet disclaims any warranty or liability whatsoever. An end user's use of evaluation or beta Software or Product is limited to thirty (30) days from original shipment unless otherwise agreed in writing by Fortinet. For clarity, notwithstanding anything to the contrary, all sales are final and no provision in this EULA entitles you to return Products, other than as expressly set forth herein.

8. Governing Law.

Any disputes arising out of this Agreement or Fortinet's limited warranty shall be governed by the laws of the state of California, without regard to the conflict of laws principles. In the event of any disputes arising out of this Agreement or Fortinet's limited warranty, the parties submit to the jurisdiction of the federal and state courts located in Santa Clara County, California, as applicable, and agree that any controversy or claim arising out of or relating to this Agreement shall be determined in the federal and state courts located in Santa Clara County, California, as applicable.

9. Limitation of Liability.

TO THE MAXIMUM EXTENT PERMITTED BY LAW AND NOTWITHSTANDING ANYTHING TO THE CONTRARY, FORTINET IS NOT LIABLE UNDER ANY CONTRACT, NEGLIGENCE, TORT, STRICT LIABILITY, INFRINGEMENT OR OTHER LEGAL OR EQUITABLE THEORY FOR ANY LOSS OF USE OF THE PRODUCT OR SERVICE OR ANY DAMAGES OF ANY KIND WHATSOEVER, WHETHER DIRECT, SPECIAL, INCIDENTAL OR CONSEQUENTIAL (INCLUDING, BUT NOT LIMITED TO, DAMAGES FOR LOSS OF GOODWILL, LOSS OF PROFIT, LOSS OF OPPORTUNITY, LOSS OR DAMAGE RELATED TO USE OF THE PRODUCT OR SERVICE IN CONNECTION WITH HIGH RISK ACTIVITIES, DE-INSTALLATION AND INSTALLATION FEES AND COSTS, DAMAGE TO PERSONAL OR REAL PROPERTY, WORK STOPPAGE, COMPUTER FAILURE OR MALFUNCTION, COMPUTER SECURITY BREACH, COMPUTER VIRUS INFECTION, LOSS OF INFORMATION OR DATA CONTAINED IN, STORED ON, OR INTEGRATED WITH ANY PRODUCT INCLUDING ANY PRODUCT RETURNED TO FORTINET FOR WARRANTY SERVICE) RESULTING FROM THE USE OF THE PRODUCT, RELATING TO WARRANTY SERVICE, OR ARISING OUT OF ANY BREACH OF THE LIMITED WARRANTY IN SECTION 6 ABOVE, EVEN IF FORTINET HAS BEEN ADVISED OF THE POSSIBILITY OF SUCH DAMAGES. THE SOLE REMEDY FOR A BREACH OF THE LIMITED WARRANTY IS, AT FORTINET'S SOLE AND ABSOLUTE DISCRETION: REPAIR, REPLACEMENT, OR REFUND OF THE DEFECTIVE OR NON-CONFORMING PRODUCT AS SPECIFICALLY STATED IN SECTION 6 ABOVE; PROVIDED, HOWEVER, IN NO EVENT SHALL ANY END-CUSTOMER REMEDIES UNDER THIS EULA AND ANY SUPPORT AGREEMENT EXCEED THE AMOUNT PAID TO FORTINET FOR THE SPECIFIC APPLICABLE DEFECTIVE OR NON-CONFORMING PRODUCT AT ISSUE.

10. Compliance with Laws, including Import/Export Laws and FCPA.

You are advised that the Products may be subject to the United States Export Administration Regulations and other import and export laws; diversion contrary to United States law and regulation is prohibited. You agree to comply with all applicable international and national laws that apply to the Products as well as end user, end-use, and destination restrictions issued by U.S. and other governments. For additional information on U.S. export controls see https://www.bis.doc.gov. Fortinet assumes no responsibility or liability for your failure to obtain any necessary import and export approvals and licenses, and Fortinet reserves the right to terminate or suspend shipments, services and support in the event Fortinet has a reasonable basis to suspect any import or export violation. You represent that neither the United States Bureau of Industry and Security nor any other governmental agency has issued sanctions against you or otherwise suspended, revoked or denied your export privileges. You agree not to use or transfer the Products for any use relating to nuclear, chemical or biological weapons, or missile technology, unless authorized by the United States Government by regulation or specific written license. Additionally, you agree not to directly or indirectly export, import or transmit the Products contrary to the laws or regulations of any other governmental entity that has jurisdiction over such export, import, transmission or use. Furthermore, you hereby agree that, for any orders that you place with Fortinet whereby any legal or regulatory requirements may apply to Fortinet such as requirements related to the International Traffic in Arms Regulations, or Buy American Act, or the Trade Agreements Act: you are responsible to ensure the Purchase Order submitted to Fortinet by you and/or any partners clearly states the specific requirement in writing, or otherwise Fortinet is not bound by any such requirements. You represent that you understand, and you hereby agree to comply with, all requirements of the U.S. Foreign Corrupt Practices Act and all other applicable laws. You represent that you hereby agree that you and your employees have not accepted, and will not accept, anything of value, including money, meals, entertainment, paid-for travel, beta, testing, evaluation, donation or free Products and/or related services, or anything else of value, in exchange for Fortinet maintaining current business or for new business opportunities. You agree you and your employees will be responsible to comply in full with all laws and policies applicable to any and all dealings with Fortinet in general and its distributors, resellers and partners.

11. U.S. Government End Users.

The Software and accompanying documentation are deemed to be "commercial computer software" and "commercial computer software documentation," respectively, pursuant to DFAR Section 227.7202 and FAR Section 12.212, as applicable. Any use, modification, reproduction, release, performance, display or disclosure of the Software and accompanying documentation by the United States Government shall be governed solely by the terms of this Agreement and shall be prohibited except to the extent expressly permitted by the terms of this Agreement and its successors.

12. Tax Liability.

You agree to be responsible for payment of any sales or use taxes imposed at any time on this transaction.

13. General Provisions.

Except as specifically permitted and required in section 5 ("Transfer") above, you agree not to assign this Agreement or transfer any of the rights or obligations under this Agreement without the prior written consent of Fortinet. This Agreement shall be binding upon, and inure to the benefit of, the successors and permitted assigns of the parties. The United Nations Convention on Contracts for the International Sales of Goods is expressly excluded. This Agreement and other Fortinet agreements may be amended or supplemented only by a writing that refers explicitly to the agreement signed on behalf of both parties, or, for this Agreement, as otherwise expressly provided in the lead-in above Section 1 above, provided, notwithstanding anything to the contrary and except for this Agreement which may be amended or updated as expressly provided in the lead-in above Section 1 above, for any amendment or other agreement to be binding on Fortinet, such amendment or other agreement must be signed by Fortinet's General Counsel. No waiver will be implied from conduct or failure to enforce rights nor effective unless in a writing signed on behalf of the party against whom the waiver is asserted. If any part of this Agreement is found unenforceable, that part will be enforced to the maximum extent permitted and the remainder shall continue in full force and effect. You acknowledge that you have read this Agreement, understand it, and agree to be bound by its terms and conditions. Notwithstanding anything to the contrary, this EULA constitutes the entire agreement between Fortinet and its end-customers and supersedes any and all prior representations or conflicting provisions, such as limitations of liability, warranties, or otherwise in any and all purported end customer agreements, whether entered into now or in the future. In the event of a conflict between this EULA and another agreement, this EULA shall prevail unless the conflicting agreement expressly states that it replaces this EULA, expressly referring to this EULA, and is agreed to in writing by authorized representatives of the parties (which, in the case of Fortinet, is Fortinet's General Counsel).

14. Privacy.

You agree to Fortinet's collection, use, disclosure, protection and transfer of your information, as set forth in the Fortinet privacy policy on the Fortinet web site (http://www.fortinet.com/about-us/privacy.html), including (a) Fortinet's use of the Customer information to send information regarding Fortinet products and services; and (b) Fortinet's disclosure of your information to provide assistance to law enforcement, governmental agencies and other authorities or to allow Fortinet to protect its Customers' and/or end users' rights.

15. Open Source Software.

Fortinet's products may include software modules that are licensed (or sublicensed) to the user under the GNU General Public License, Version 2, of June 1991 ("GPL") or GNU Lesser General Public License, Version 2.1, of February 1999 ("LGPL") or other open source software licenses which, among other rights, permit the user to use, copy, modify and redistribute modules, or portions thereof, and may also require attribution disclosures and access to the source code ("Open Source Software"). The GPL requires that for any Open Source Software covered under the GPL, which is distributed to someone in an executable binary format, that the source code also be made available to those users. For any Open Source Software covered under the GPL, the source code is made available on this CD or download package. If any Open Source Software licenses require that Fortinet provide rights to use, copy or modify any Open Source Software program that are broader than the rights granted in this agreement, then such rights shall take precedence over the rights and restrictions herein. Fortinet will provide, for a charge reflecting our standard distribution costs, the complete machine-readable copy of the modified software modules. To obtain a complete machine-readable copy, please send your written request, along with a check in the amount of US $25.00, to General Public License Source Code Request, Fortinet, Inc., 899 Kifer Rd, Sunnyvale, CA 94086 USA. To receive the modified software modules, you must also include the following information: (a) Name, (b) Address, (c) Telephone number, (d) E-mail Address, (e) Product purchased (if applicable), (f) Product Serial Number (if applicable). All open source software modules are licensed free of charge. There is no warranty for these modules, to the extent permitted by applicable law. The copyright holders provide these software modules "AS-IS" without warranty of any kind, either expressed or implied. In no event will the copyright holder for the open source software be liable to you for damages, including any special, incidental or consequential damages arising out of the use or inability to use the software modules, even if such holder has been advised of the possibility of such damages. A full copy of this license, including additional open source software license disclosures and third party license disclosures applicable to certain Fortinet products, may obtained by contacting Fortinet's Legal Department at legal@fortinet.com.

GNU GENERAL PUBLIC LICENSE GNU GENERAL PUBLIC LICENSE

Version 2, June 1991

Copyright (C) 1989, 1991 Free Software Foundation, Inc.

59 Temple Place, Suite 330, Boston, MA 02111-1307 USA

TERMS AND CONDITIONS FOR COPYING, DISTRIBUTION AND MODIFICATION

This License applies to any program or other work which contains a notice placed by the copyright holder saying it may be distributed under the terms of this General Public License. The “Program”, below, refers to any such program or work, and a “work based on the Program” means either the Program or any derivative work under copyright law: that is to say, a work containing the Program or a portion of it, either verbatim or with modifications and/or translated into another language. (Hereinafter, translation is included without limitation in the term “modification”.) Each licensee is addressed as “you”.

Activities other than copying, distribution and modification are not covered by this License; they are outside its scope. The act of running the Program is not restricted, and the output from the Program is covered only if its contents constitute a work based on the Program (independent of having been made by running the Program). Whether that is true depends on what the Program does.1. You may copy and distribute verbatim copies of the Program’s source code as you receive it, in any medium, provided that you conspicuously and appropriately publish on each copy an appropriate copyright notice and disclaimer of warranty; keep intact all the notices that refer to this License and to the absence of any warranty; and give any other recipients of the Program a copy of this License along with the Program. You may charge a fee for the physical act of transferring a copy, and you may at your option offer warranty protection in exchange for a fee.

2. You may modify your copy or copies of the Program or any portion of it, thus forming a work based on the Program, and copy and distribute such modifications or work under the terms of Section 1 above, provided that you also meet all of these conditions:

a) You must cause the modified files to carry prominent notices stating that you changed the files and the date of any change.

b) You must cause any work that you distribute or publish, that in whole or in part contains or is derived from the Program or any part thereof, to be licensed as a whole at no charge to all third parties under the terms of this License.

c) If the modified program normally reads commands interactively when run, you must cause it, when started running for such interactive use in the most ordinary way, to print or display an announcement including an appropriate copyright notice and a notice that there is no warranty (or else, saying that you provide a warranty) and that users may redistribute the program under these conditions, and telling the user how to view a copy of this License. (Exception: if the Program itself is interactive but does not normally print such an announcement, your work based on the Program is not required to print an announcement.)

These requirements apply to the modified work as a whole. If identifiable sections of that work are not derived from the Program, and can be reasonably considered independent and separate works in themselves, then this License, and its terms, do not apply to those sections when you distribute them as separate works. But when you distribute the same sections as part of a whole which is a work based on the Program, the distribution of the whole must be on the terms of this License, whose permissions for other licensees extend to the entire whole, and thus to each and every part regardless of who wrote it.. Thus, it is not the intent of this section to claim rights or contest your rights to work written entirely by you; rather, the intent is to exercise the right to control the distribution of derivative or collective works based on the Program. In addition, mere aggregation of another work not based on the Program with the Program (or with a work based on the Program) on a volume of a storage or distribution medium does not bring the other work under the scope of this License.

3. You may copy and distribute the Program (or a work based on it, under Section 2) in object code or executable form under the terms of Sections 1 and 2 above provided that you also do one of the following:

a) Accompany it with the complete corresponding machine-readable source code, which must be distributed under the terms of Sections1 and 2 above on a medium customarily used for software interchange; or,

b) Accompany it with a written offer, valid for at least three years, to give any third party, for a charge no more than your cost of physically performing source distribution, a complete machine-readable copy of the corresponding source code, to be distributed under the terms of Sections 1 and 2 above on a medium customarily used for software interchange; or,

c) Accompany it with the information you received as to the offer to distribute corresponding source code. (This alternative is allowed only for noncommercial distribution and only if you received the program in object code or executable form with such an offer, in accord with Subsection b above.)

Source code for a work means the preferred form of the work for making modifications to it. For an executable work, complete source code means all the source code for all modules it contains, plus any associated interface definition files, plus the scripts used to control compilation and installation of the executable. However, as a special exception, the source code distributed need not include anything that is normally distributed (in either source or binary form) with the major components (compiler, kernel, and so on) of the operating system on which the executable runs, unless that component itself accompanies the executable. If distribution of executable or object code is made by offering access to copy from a designated place, then offering equivalent access to copy the source code from the same place counts as distribution of the source code, even though third parties are not compelled to copy the source along with the object code.

4. You may not copy, modify, sublicense, or distribute the Program except as expressly provided under this License. Any attempt otherwise to copy, modify, sublicense or distribute the Program is void, and will automatically terminate your rights under this License. However, parties who have received copies, or rights, from you under this License will not have their licenses terminated so long as such parties remain in full compliance.

5. You are not required to accept this License, since you have not signed it. However, nothing else grants you permission to modify or distribute the Program or its derivative works. These actions are prohibited by law if you do not accept this License. Therefore, by modifying or distributing the Program (or any work based on the Program), you indicate your acceptance of this License to do so, and all its terms and conditions for copying, distributing or modifying the Program or works based on it.

6. Each time you redistribute the Program (or any work based on the Program), the recipient automatically receives a license from the original licensor to copy, distribute or modify the Program subject to these terms and conditions. You may not impose any further restrictions on the recipients’ exercise of the rights granted herein. You are not responsible for enforcing compliance by third parties to this License.

7. If, as a consequence of a court judgment or allegation of patent infringement or for any other reason (not limited to patent issues), conditions are imposed on you (whether by court order, agreement or otherwise) that contradict the conditions of this License, they do not excuse you from the conditions of this License. If you cannot distribute so as to satisfy simultaneously your obligations under this License and any other pertinent obligations, then as a consequence you may not distribute the Program at all. For example, if a patent license would not permit royalty-free redistribution of the Program by all those who receive copies directly or indirectly through you, then the only way you could satisfy both it and this License would be to refrain entirely from distribution of the Program.

If any portion of this section is held invalid or unenforceable under any particular circumstance, the balance of the section is intended to apply and the section as a whole is intended to apply in other circumstances.

It is not the purpose of this section to induce you to infringe any patents or other property right claims or to contest validity of any such claims; this section has the sole purpose of protecting the integrity of the free software distribution system, which is implemented by public license practices. Many people have made generous contributions to the wide range of software distributed through that system in reliance on consistent application of that system; it is up to the author/donor to decide if he or she is willing to distribute software through any other system and a licensee cannot impose that choice.

This section is intended to make thoroughly clear what is believed to be a consequence of the rest of this License.

8. If the distribution and/or use of the Program is restricted in certain countries either by patents or by copyrighted interfaces, the original copyright holder who places the Program under this License may add an explicit geographical distribution limitation excluding those countries, so that distribution is permitted only in or among countries not thus excluded. In such case, this License incorporates the limitation as if written in the body of this License.

9. The Free Software Foundation may publish revised and/or new versions of the General Public License from time to time. Such new versions will be similar in spirit to the present version, but may differ in detail to address new problems or concerns. Each version is given a distinguishing version number. If the Program specifies a version number of this License which applies to it and “any later version”, you have the option of following the terms and conditions either of that version or of any later version published by the Free Software Foundation. If the Program does not specify a version number of this License, you may choose any version ever published by the Free Software Foundation.

10. If you wish to incorporate parts of the Program into other free programs whose distribution conditions are different, write to the author to ask for permission. For software which is copyrighted by the Free Software Foundation, write to the Free Software Foundation; we sometimes make exceptions for this. Our decision will be guided by the two goals of preserving the free status of all derivatives of our free software and of promoting the sharing and reuse of software generally.

NO WARRANTY

11. BECAUSE THE PROGRAM IS LICENSED FREE OF CHARGE, THERE IS NO WARRANTY FOR THE PROGRAM, TO THE EXTENT PERMITTED BY APPLICABLE LAW. EXCEPT WHEN OTHERWISE STATED IN WRITING THE COPYRIGHT HOLDERS AND/OR OTHER PARTIES PROVIDE THE PROGRAM “AS IS” WITHOUT WARRANTY OF ANY KIND, EITHER EXPRESSED OR IMPLIED, INCLUDING, BUT NOT LIMITED TO, THE IMPLIED WARRANTIES OF MERCHANTABILITY AND FITNESS FOR A PARTICULAR PURPOSE. THE ENTIRE RISK AS TO THE QUALITY AND PERFORMANCE OF THE PROGRAM IS WITH YOU. SHOULD THE PROGRAM PROVE DEFECTIVE, YOU ASSUME THE COST OF ALL NECESSARY SERVICING, REPAIR OR CORRECTION.

12. IN NO EVENT UNLESS REQUIRED BY APPLICABLE LAW OR AGREED TO IN WRITING WILL ANY COPYRIGHT HOLDER, OR ANY OTHER PARTY WHO MAY MODIFY AND/OR REDISTRIBUTE THE PROGRAM AS PERMITTED ABOVE, BE LIABLE TO YOU FOR DAMAGES, INCLUDING ANY GENERAL, SPECIAL, INCIDENTAL OR CONSEQUENTIAL DAMAGES ARISING OUT OF THE USE OR INABILITY TO USE THE PROGRAM (INCLUDING BUT NOT LIMITED TO LOSS OF DATA OR DATA BEING RENDERED INACCURATE OR LOSSES SUSTAINED BY YOU OR THIRD PARTIES OR A FAILURE OF THE PROGRAM TO OPERATE WITH ANY OTHER PROGRAMS), EVEN IF SUCH HOLDER OR OTHER PARTY HAS BEEN ADVISED OF THE POSSIBILITY OF SUCH DAMAGES

GNU LESSER GENERAL PUBLIC LICENSE

Version 2.1, February 1999

Copyright (C) 1991, 1999 Free Software Foundation, Inc.

59 Temple Place, Suite 330, Boston, MA 02111-1307 USA

TERMS AND CONDITIONS FOR COPYING, DISTRIBUTION AND MODIFICATION

0. This License Agreement applies to any software library or other program which contains a notice placed by the copyright holder or other authorized party saying it may be distributed under the terms of this Lesser General Public License (also called “this License”). Each licensee is addressed as “you”..

A “library” means a collection of software functions and/or data prepared so as to be conveniently linked with application programs (which use some of those functions and data) to form executables.

The “Library”, below, refers to any such software library or work which has been distributed under these terms. A “work based on the Library” means either the Library or any derivative work under copyright law: that is to say, a work containing the Library or a portion of it, either verbatim or with modifications and/or translated straightforwardly into another language. (Hereinafter, translation is included without limitation in the term “modification”.)

“Source code” for a work means the preferred form of the work for making modifications to it. For a library, complete source code means all the source code for all modules it contains, plus any associated interface definition files, plus the scripts used to control compilation and installation of the library.

Activities other than copying, distribution and modification are not covered by this License; they are outside its scope. The act of running a program using the Library is not restricted, and output from such a program is covered only if its contents constitute a work based on the Library (independent of the use of the Library in a tool for writing it). Whether that is true depends on what the Library does and what the program that uses the Library does.

1. You may copy and distribute verbatim copies of the Library’s complete source code as you receive it, in any medium, provided that you conspicuously and appropriately publish on each copy an appropriate copyright notice and disclaimer of warranty; keep intact all the notices that refer to this License and to the absence of any warranty; and distribute a copy of this License along with the Library. You may charge a fee for the physical act of transferring a copy, and you may at your option offer warranty protection in exchange for a fee.

2. You may modify your copy or copies of the Library or any portion of it, thus forming a work based on the Library, and copy and distribute such modifications or work under the terms of Section 1 above, provided that you also meet all of these conditions:

a) The modified work must itself be a software library.

b) You must cause the files modified to carry prominent notices stating that you changed the files and the date of any change.

c) You must cause the whole of the work to be licensed at no charge to all third parties under the terms of this License.

d) If a facility in the modified Library refers to a function or a table of data to be supplied by an application program that uses the facility, other than as an argument passed when the facility is invoked, then you must make a good faith effort to ensure that, in the event an application does not supply such function or table, the facility still operates, and performs whatever part of its purpose remains meaningful.

These requirements apply to the modified work as a whole. If identifiable sections of that work are not derived from the Library, and can be reasonably considered independent and separate works in themselves, then this License, and its terms, do not apply to those sections when you distribute them as separate works. But when you distribute the same sections as part of a whole which is a work based on the Library, the distribution of the whole must be on the terms of this License, whose permissions for other licensees extend to the entire whole, and thus to each and every part regardless of who wrote it. Thus, it is not the intent of this section to claim rights or contest your rights to work written entirely by you; rather, the intent is to exercise the right to control the distribution of derivative or collective works based on the Library. In addition, mere aggregation of another work not based on the Library with the Library (or with a work based on the Library) on a volume of a storage or distribution medium does not bring the other work under the scope of this License.

3. You may opt to apply the terms of the ordinary GNU General Public License instead of this License to a given copy of the Library. To do this, you must alter all the notices that refer to this License, so that they refer to the ordinary GNU General Public License, version 2 instead of to this License. (If a newer version than version 2 of the ordinary GNU General Public License has appeared, then you can specify that version instead if you wish.) Do not make any other change in these notices.

Once this change is made in a given copy, it is irreversible for that copy, so the ordinary GNU General Public License applies to all subsequent copies and derivative works made from that copy. This option is useful when you wish to copy part of the code of the Library into a program that is not a library.

4. You may copy and distribute the Library (or a portion or derivative of it, under Section 2) in object code or executable form under the terms of Sections 1 and 2 above provided that you accompany it with the complete corresponding machine-readable source code, which must be distributed under the terms of Sections 1 and 2 above on a medium customarily used for software interchange.

If distribution of object code is made by offering access to copy from a designated place, then offering equivalent access to copy the source code from the same place satisfies the requirement to distribute the source code, even though third parties are not compelled to copy the source along with the object code.

5. A program that contains no derivative of any portion of the Library, but is designed to work with the Library by being compiled or linked with it, is called a “work that uses the Library”. Such a work, in isolation, is not a derivative work of the Library, and therefore falls outside the scope of this License.

However, linking a “work that uses the Library” with the Library creates an executable that is a derivative of the Library (because it contains portions of the Library), rather than a “work that uses the library”. The executable is therefore covered by this License. Section 6 states terms for distribution of such executables.
When a “work that uses the Library” uses material from a header file that is part of the Library, the object code for the work may be a derivative work of the Library even though the source code is not.
Whether this is true is especially significant if the work can be linked without the Library, or if the work is itself a library. The threshold for this to be true is not precisely defined by law.
If such an object file uses only numerical parameters, data structure layouts and accessors, and small macros and small inline functions (ten lines or less in length), then the use of the object file is unrestricted, regardless of whether it is legally a derivative work. (Executables containing this object code plus portions of the Library will still fall under Section 6.) Otherwise, if the work is a derivative of the Library, you may distribute the object code for the work under the terms of Section 6. Any executables containing that work also fall under Section 6, whether or not they are linked directly with the Library itself.
6. As an exception to the Sections above, you may also combine or link a “work that uses the Library” with the Library to produce a work containing portions of the Library, and distribute that work under terms of your choice, provided that the terms permit modification of the work for your own use and reverse engineering for debugging such modifications. You must give prominent notice with each copy of the work that the Library is used in it and that the Library and its use are covered by this License. You must supply a copy of this License. If the work during execution displays copyright notices, you must include the copyright notice for the Library among them, as well as a reference directing the user to the copy of this License. Also, you must do one of these things:
aa) Accompany the work with the complete corresponding machine-readable source code for the Library including whatever changes were used in the work (which must be distributed under Sections 1 and 2 above); and, if the work is an executable linked with the Library, with the complete machine-readable “work that uses the Library”, as object code and/or source code, so that the user can modify the Library and then relink to produce a modified executable containing the modified Library. (It is understood that the user who changes the contents of definitions files in the Library will not necessarily be able to recompile the application to use the modified definitions.)
b) Use a suitable shared library mechanism for linking with the Library. A suitable mechanism is one that (1) uses at run time a copy of the library already present on the user’s computer system, rather than copying library functions into the executable, and (2) will operate properly with a modified version of the library, if the user installs one, as long as the modified version is interface-compatible with the version that the work was made with.
c) Accompany the work with a written offer, valid for at least three years, to give the same user the materials specified in Subsection 6a, above, for a charge no more than the cost of performing this distribution.
d) If distribution of the work is made by offering access to copy from a designated place, offer equivalent access to copy the above specified materials from the same place.
e) Verify that the user has already received a copy of these materials or that you have already sent this user a copy.
For an executable, the required form of the “work that uses the Library” must include any data and utility programs needed for reproducing the executable from it. However, as a special exception, the materials to be distributed need not include anything that is normally distributed (in either source or binary form) with the major components (compiler, kernel, and so on) of the operating system on which the executable runs, unless that component itself accompanies the executable. It may happen that this requirement contradicts the license restrictions of other proprietary libraries that do not normally accompany the operating system. Such a contradiction means you cannot use both them and the Library together in an executable that you distribute.
7. You may place library facilities that are a work based on the Library side-by-side in a single library together with other library facilities not covered by this License, and distribute such a combined library, provided that the separate distribution of the work based on the Library and of the other library facilities is otherwise permitted, and provided that you do these two things:
a) Accompany the combined library with a copy of the same work based on the Library, uncombined with any other library facilities. This must be distributed under the terms of the Sections above.
b) Give prominent notice with the combined library of the fact that part of it is a work based on the Library, and explaining where to find the accompanying uncombined form of the same work.
8. You may not copy, modify, sublicense, link with, or distribute the Library except as expressly provided under this License. Any attempt otherwise to copy, modify, sublicense, link with, or distribute the Library is void, and will automatically terminate your rights under this License. However, parties who have received copies, or rights, from you under this License will not have their licenses terminated so long as such parties remain in full compliance.
9. You are not required to accept this License, since you have not signed it. However, nothing else grants you permission to modify or distribute the Library or its derivative works. These actions are prohibited by law if you do not accept this License. Therefore, by modifying or distributing the Library (or any work based on the Library), you indicate your acceptance of this License to do so, and all its terms and conditions for copying, distributing or modifying the Library or works based on it.
10. Each time you redistribute the Library (or any work based on the Library), the recipient automatically receives a license from the original licensor to copy, distribute, link with or modify the Library subject to these terms and conditions. You may not impose any further restrictions on the recipients’ exercise of the rights granted herein. You are not responsible for enforcing compliance by third parties with this License.
11. If, as a consequence of a court judgment or allegation of patent infringement or for any other reason (not limited to patent issues), conditions are imposed on you (whether by court order, agreement or otherwise) that contradict the conditions of this License, they do not excuse you from the conditions of this License. If you cannot distribute so as to satisfy simultaneously your obligations under this License and any other pertinent obligations, then as a consequence you may not distribute the Library at all. For example, if a patent license would not permit royalty-free redistribution of the Library by all those who receive copies directly or indirectly through you, then the only way you could satisfy both it and this License would be to refrain entirely from distribution of the Library.
If any portion of this section is held invalid or unenforceable under any particular circumstance, the balance of the section is intended to apply, and the section as a whole is intended to apply in other circumstances.
It is not the purpose of this section to induce you to infringe any patents or other property right claims or to contest validity of any such claims; this section has the sole purpose of protecting the integrity of the free software distribution system which is implemented by public license practices. Many people have made generous contributions to the wide range of software distributed through that system in reliance on consistent application of that system; it is up to the author/donor to decide if he or she is willing to distribute software through any other system and a licensee cannot impose that choice. This section is intended to make thoroughly clear what is believed to be a consequence of the rest of this License.
12. If the distribution and/or use of the Library is restricted in certain countries either by patents or by copyrighted interfaces, the original copyright holder who places the Library under this License may add an explicit geographical distribution limitation excluding those countries, so that distribution is permitted only in or among countries not thus excluded. In such case, this License incorporates the limitation as if written in the body of this License.
13. The Free Software Foundation may publish revised and/or new versions of the Lesser General Public License from time to time. Such new versions will be similar in spirit to the present version, but may differ in detail to address new problems or concerns. Each version is given a distinguishing version number. If the Library specifies a version number of this License which applies to it and “any later version”, you have the option of following the terms and conditions either of that version or of any later version published by the Free Software Foundation. If the Library does not specify a license version number, you may choose any version ever published by the Free Software Foundation.
14. If you wish to incorporate parts of the Library into other free programs whose distribution conditions are incompatible with these, write to the author to ask for permission. For software which is copyrighted by the Free Software Foundation, write to the Free Software Foundation; we sometimes make exceptions for this. Our decision will be guided by the two goals of preserving the free status of all derivatives of our free software and of promoting the sharing and reuse of software generally.
15. The warranty disclaimer contained in Sections 11 and 12 of the preceding GPL License is incorporated herein.

Fortinet Customer Service & Support

Create a support account, register and manage your products, download updates, firmware images and release notes, and create technical support tickets.
https://support.fortinet.com

Fortinet Document Library

Up-to-date versions of Fortinet publications for the entire family of Fortinet products.
http://docs.fortinet.com

FortiGuard Threat Research and Response

Up-to-date information on vulnerabilities and threats, includes a virus scanner, IP signature look-up, and web filtering tools.
http://www.fortiguard.com

Fortinet.com