QuickStart Guide

FortiAP 432G

FAP-432G

This guide covers: FAP-432G

June 10, 2025

Copyright © 2025 Fortinet, Inc. All rights reserved. Fortinet®, FortiGate®, FortiCare® and FortiGuard®, and certain other marks are registered trademarks of Fortinet, Inc., and other Fortinet names herein may also be registered and/or common law trademarks of Fortinet. All other product or company names may be trademarks of their respective owners. Performance and other metrics contained herein were attained in internal lab tests under ideal conditions, and actual performance and other results may vary. Network variables, different network environments and other conditions may affect performance results. Nothing herein represents any binding commitment by Fortinet, and Fortinet disclaims all warranties, whether express or implied, except to the extent Fortinet enters a binding written contract, signed by Fortinet's SVP Legal and above, with a purchaser that expressly warrants that the identified product will perform according to certain expressly-identified performance metrics and, in such event, only the specific performance metrics expressly identified in such binding written contract shall be binding on Fortinet. For absolute clarity, any such warranty will be limited to performance in the same ideal conditions as in Fortinet's internal lab tests. Fortinet disclaims in full any covenants, representations, and guarantees pursuant hereto, whether express or implied. Fortinet reserves the right to change, modify, transfer, or otherwise revise this publication without notice, and the most current version of the publication shall be applicable.

For Product License Agreement / EULA and Warranty Terms, visit https://www.fortinet.com/content/dam/fortinet/assets/legal/EULA.pdf

Before you begin

Register your device to access FortiGuard updates, cloud management, firmware upgrades, technical support and warranty coverage.

https://support.fortinet.com

The Essentials

Default Logins

https://192.168.1.2
Username: ***admin***
Password**: leave blank**

https://fortiedge.forticloud.com
Username: ***user-defined***
Password**: *user-defined***

Admin Guide

For a detailed FortiAP setup and configuration information, refer to the Admin Guide on https://docs.fortinet.com/product/fortiap

Customer Service

For contracts, licensing, product registration and account management, contact FortiCare Support at https://www.fortinet.com/support/contact

Self-service Resources

Access our knowledge base, forums, videos and technical experts at https://www.fortinet.com/support/support-services/forticare-support

Thank you for choosing Fortinet

Package Contents

FortiAP 432G
FAP-432G

QuickStart Guide

FortiAP Device

1x PoE Injector and AC Cord
(100V-220V AC Input,
54V DC Output)

Wall Mount
Bracket

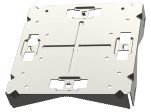

Pole Mount
Bracket

Mounting Kit
(2x Pole Straps,
4x Mounting Bolts with Screws,
1x Grounding Cable,
9x Mounting Screws)

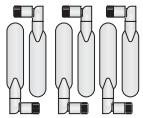

9x N-Type Omni Antennas

Setup Options

Direct Connection

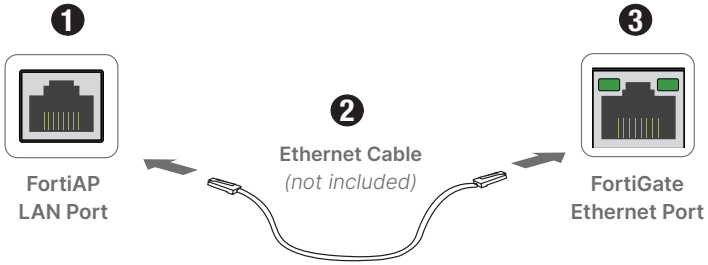

Note: To self-configure, preauthorize the FortiAP on your FortiGate Otherwise once connected, wait for the FortiAP to appear on the Managed FortiAP page in FortiOS.

Network Connection

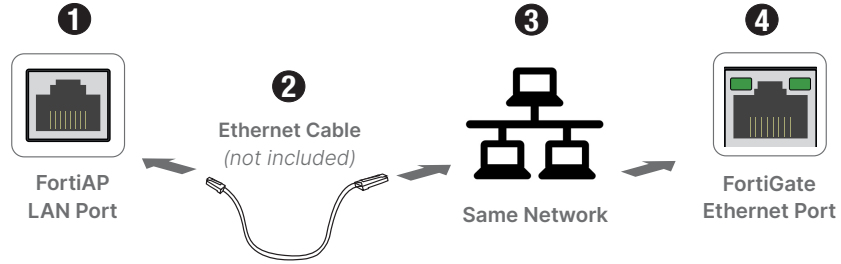

Note: Connect to the FortiAP using 192.168.1.2 with username *admin* and set a password. Specify the FortiGate IP using:

```
cfg -a AC_IPADDR=0.0.0.0
cfg -c
```

where `0.0.0.0` is the FortiGate IP.

FortiLAN Cloud

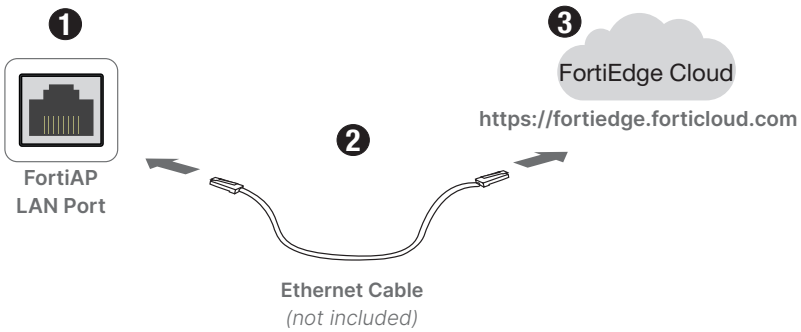

Note: Use your FortiCloud credentials to log in, then click Inventory, Import AP Key and enter the Cloud Key on the device sticker

Wall Installation

1. Mark the location of the mounting bolts using the wallmount bracket
2. Drill holes and hammer the bolts into the drilled holes
3. Attach the wallmount bracket to the device with the provided screws
4. Secure the device on the wall using the mounting bolts

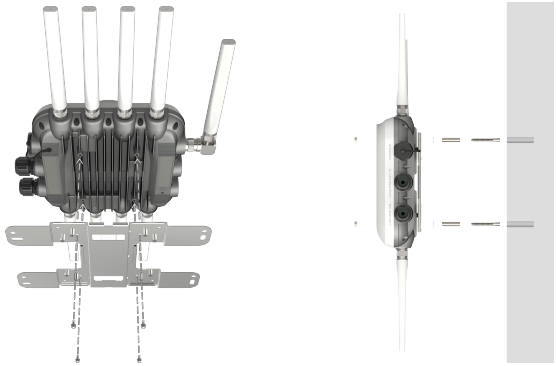

Pole Installation

1. Attach the wallmount bracket, then the pole mount bracket to the device using the provided mounting screws
2. Loop the pole straps through the bracket slots, then around the pole
3. Tighten the straps

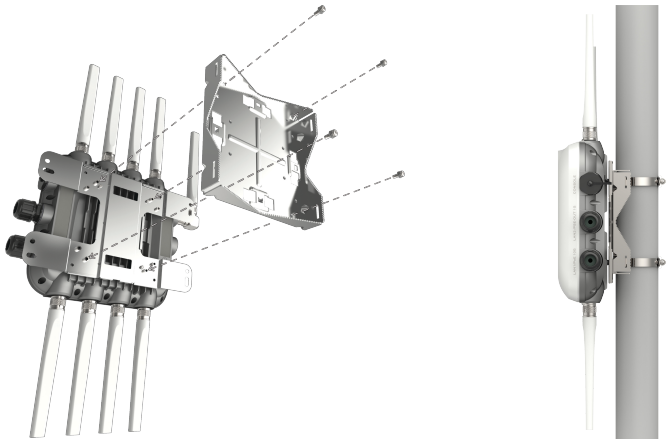

Antenna Installation

1. Insert the antenna base firmly into the appropriate antenna mount
2. Securely hand tighten the antenna fastening collar
3. Repeat for the remaining antennas

Note: Antennas A1/A2/A3/A4 radiate at 2.4/5.0GHz; A5/A6/A7/A8 radiate at 2.4/5/6GHz

PoE Injector Installation

1. Attach the supplied AC power cord to the PoE injector
2. Plug the power cord into a power outlet or UPS
3. Connect an Ethernet cable from the injector POE port to LAN 1 on the FortiAP
4. Use the LAN port on the injector to connect to a network device

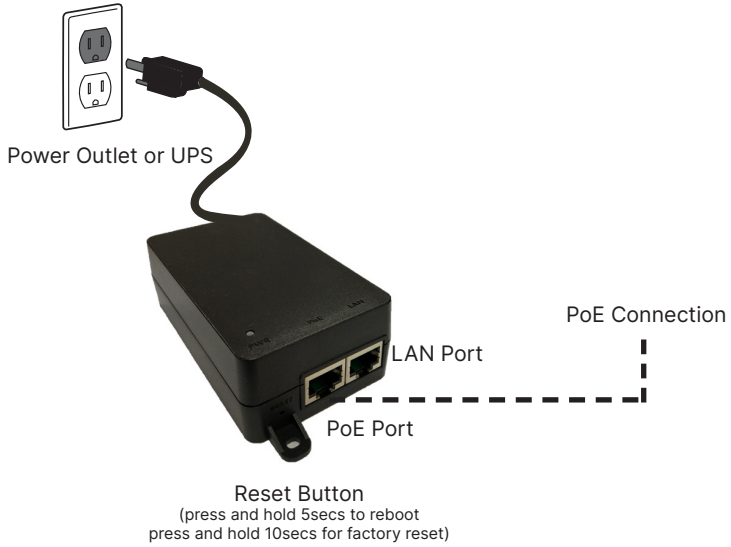

Waterproof Cabling

1. Unscrew the sealing nut from the panel connector and remove the seal and claw
2. Thread the RJ45 plug through the nuts and ring, then the panel connector
3. Wrap the seal and claw around the cable between the sealing nut and connector
4. Insert the RJ45 plug into the port and screw the panel connector onto the threads
5. Slide the seal and claw along the cable into the panel connector
6. Threat the coupling ring onto the panel connector and tighten it

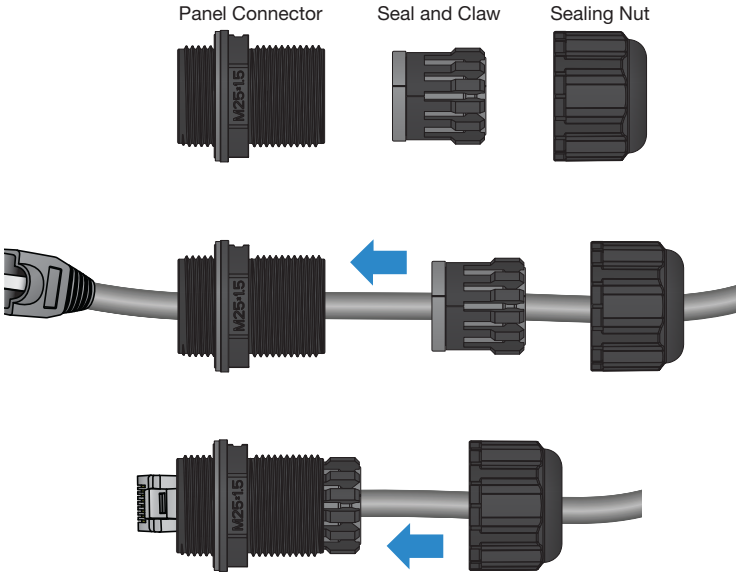

Interfaces

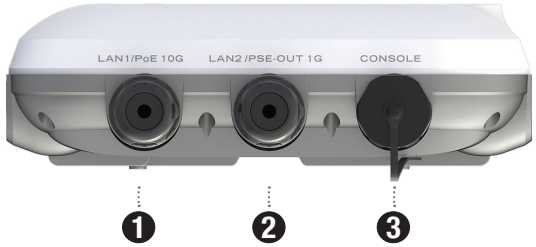

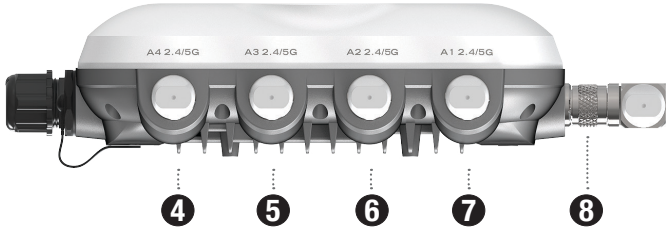

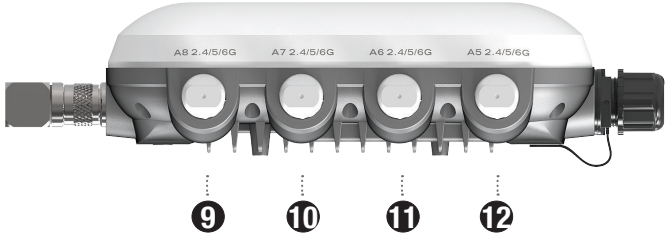

1. LAN 1 10GE / PoE 802.3bt (RJ45)
2. LAN 2 1GE / 802.3af PSE OUT (RJ45)
3. CONSOLE (RJ45) Reset button above port
4. A4 2.4/5GHz
5. A3 2.4/5GHz
6. A2 2.4/5GHz
7. A1 2.4/5GHz
8. BLE 5.0 / Zigbee 3.0
9. A8 2.4/5/6GHz
10. A7 2.4/5/6GHz
11. A6 2.4/5/6GHz
12. A5 2.4/5/6GHz

LED Indicators

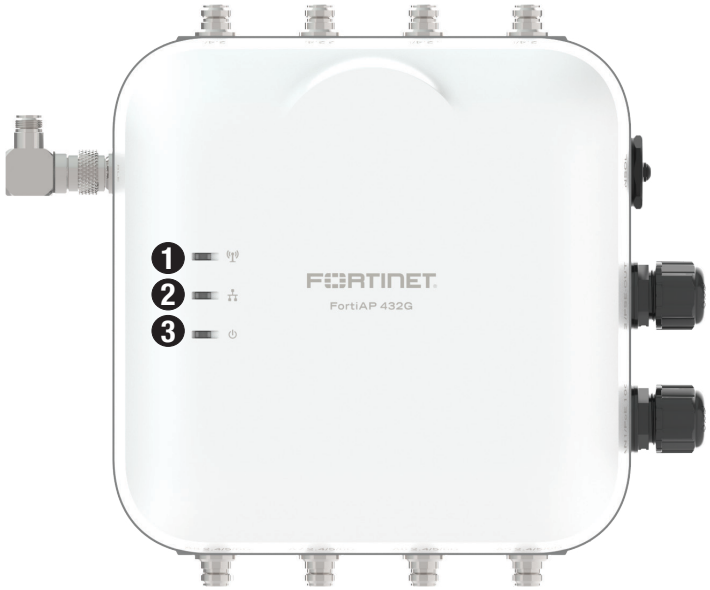

1 WiFi

- **Off**: Radio 1 & 2 off
- **Blue**: Radio 1 on
- **Blinking Blue**: Radio 1 transmitting
- **Amber**: Radio 2 on
- **Blinking Amber**: Radio 2 transmitting
- **Green**: Radio 1 & 2 on
- **Blinking Green**: Radio 1 & 2 transmitting

2 LAN

- **Off**: Not connected
- **Green**: Connected
- **Blinking Green**: Transmitting at 10/1Gbps
- **Blinking Amber**: Transmitting at 100Mbps

3 Power

- **Off**: Device off
- **Green**: Device on
- **Blinking Green**: Booting up or upgrading
- **Amber**: Reserved for customizations